Written materials relating to an item on this agenda that are distributed to the legislative bodies within 72 hours before the item is to be considered at its regularly scheduled meeting will be made available for public inspection at the City Clerk's Office, 300 West Third Street 4th Floor during customary business hours. Agenda reports are also on the City of Oxnard web site at www.oxnard.org.

CITY OF OXNARD CALIFORNIA

AGENDA
OXNARD CITY COUNCIL
COMMUNITY SERVICES, PUBLIC SAFETY, HOUSING & DEVELOPMENT COMMITTEE

Council Chambers, 305 West Third Street
July 25, 2023
Regular Meeting - 6:45 to 8:15 PM

Zoom details to call-in for public comment during a meeting:

1. Dial Phone Number: (888) 475-4499
2. Enter Meeting ID: 892 9047 7408
3. Passcode: 611583

If you wish to speak during public comments or a particular item on the agenda, please sign-on by following the zoom call-in steps listed above. Once the presiding officer calls for public speakers, press *9 to raise your hand to inform the City Clerk you would like to speak during the public speaking section for that particular item on the agenda, while in the zoom waiting room. Press *6 when asked to unmute. Listen to the instructions provided virtually on the phone while on hold in the zoom waiting room. Please note that there is a slight time delay when viewing the meeting via television.

IN ACCORDANCE WITH ASSEMBLY BILL 2449, MEMBERS OF THE LEGISLATIVE BODY MAY MEET IN-PERSON OR REMOTELY. TO PARTICIPATE REMOTELY VISIT WWW.OXNARD.ORG.

To find out how you may provide public comment, please refer to the instructions below or at **www.https://www.oxnard.org/city-meetings/**.

The public may view the meeting from home on Spectrum channel 10, Frontier channel 35, or YouTube at Youtube.com/oxnardnews. Video recordings of the meeting are typically available online following the meeting at the City's website at www.oxnard.org/city-meetings.

*Please see the link for the Measure M pre-recorded presentation video for each item listed on this agenda.

YOU MAY PARTICIPATE IN THE MEETING IN THE FOLLOWING WAYS:

1. ATTEND THE MEETING AT THE LOCATION LISTED ABOVE: Submit a speaker card to the City Clerk.

2. EMAIL COMMENTS OR SIGN UP TO SPEAK REMOTELY BEFORE THE MEETING

   a. Submit a request to speak remotely by 3 p.m. on the day of the meeting by using the form available at **www.oxnard.org/citymeetings**.
   b. Submit an email to **cityclerk@oxnard.org** by 3 p.m. on the day of the meeting (indicate the agenda item number in the subject line). All email correspondence will be forwarded to the legislative body prior to the start of the meeting and made part of the legislative record.
   c. Contact the City Clerk's Office at (805) 385-7803 to submit your request.

3. PROVIDING PUBLIC COMMENTS REMOTELY DURING THE MEETING

   a. Follow Zoom details listed above.

In compliance with the Americans with Disabilities Act, if you require special assistance to participate in a meeting, please contact the City Clerk's Office at 385-7803. Notice at least 72 hours prior to the meeting will enable the City to reasonably arrange for your accessibility to the meeting.

Agenda Item Time Estimates include: (Minutes for Presentation + Council Discussion + Public Comment)

b. Public comments on agenda items will be taken following the announcement of the item. After the item is announced, members of the public may register or otherwise be recognized for the purpose of providing public comment.

Please review the Zoom instructions on the registration page to help ensure there are no technical difficulties during your comments and help you understand public comment procedures using Zoom. Detailed participation instructions can be found at www.oxnard.org/city-meetings.

In the event of a disruption which prevents a legislative body of the City of Oxnard from broadcasting a meeting using a call-in option or internet-based service option, or in the event of a disruption within the City's control which prevents members of the public from offering public comment using the call-in option or internet-based service option, the legislative body shall take no further action on items appearing on a meeting agenda until public access to the meeting via the call-in option or internet-based service option is restored. However, if any of the broadcast options are disrupted, but any of the other broadcast options is still available to the public, the legislative body may take further action on items appearing on a meeting agenda without waiting for the disrupted broadcast option(s) to be restored.

A. ROLL CALL, POSTING OF AGENDA, FLAG SALUTE
Consideration of Teleconference Participation pursuant to Assembly Bill 2449.

B. PUBLIC COMMENTS ON ITEMS NOT ON THE AGENDA
A person may address the legislative body only on matters not appearing on the agenda and within the subject matter jurisdiction of the legislative body. Speaker requests shall be submitted as set forth on the first page of this agenda. Speakers are limited to three minutes. After 30 minutes, if all speakers have not had the opportunity to speak, the remaining speakers will be given an opportunity to speak prior to adjournment of the meeting. The legislative body cannot enter into a detailed discussion or take action on any items presented during public comments at this time. Such items may only be referred to the City Manager/Executive Director/Secretary for administrative action or scheduled on a subsequent agenda for discussion. Persons wishing to speak on public hearing items should do so at the time of the hearing.

C. CONSENT AGENDA

1. City Clerk Department
SUBJECT: Approval of Minutes.
RECOMMENDATION: That the Community Services, Public Safety, Housing & Development Committee approve the minutes of the June 13, 2023 and July 11, 2023 regular meetings as presented.
Contact: Rose Chaparro, (805) 385-7805

D. REPORTS

1. Housing Department
SUBJECT: Accessibility Remodel Project at Fashion Park and Concord Sites. (10 minutes)
RECOMMENDATION: That the Community Services, Public Safety, Housing & Development Committee recommend that the Board of Commissioners of the Housing Authority of the City of Oxnard approve and authorize execution of the following firm-fixed price contracts:

1. Agreement number A-8532 in the amount of $1,832,249.88 with MDJ Management using funds previously appropriated from the 2023 Capital Fund grant for Section 504 compliance with the American Disabilities Act for properties located at 234 Fashion Park Place, 251 Fashion Park Place, and 257 Fashion Park Place.
2. Agreement number A- 8533 in the amount of $1,221,499.92 with MDJ Management using funds previously appropriated from the 2022 Capital Fund grant for Section 504 compliance with the American Disabilities Act for properties located at 2950 Concord Drive and 2956 Concord Drive.

Please click the following link to view the required Measure M pre-recorded presentation video: https://youtu.be/h_d3thN1zpg
Contact: Emilio Ramirez, (805) 385-8094

E. ITEMS FOR FUTURE AGENDAS

F. ADJOURNMENT

COMMUNITY SERVICES, PUBLIC SAFETY, HOUSING & DEVELOPMENT COMMITTEE AGENDA REPORT

CONSENT AGENDA
AGENDA ITEM NO. C.1

DATE: July 25, 2023

TO: Community Services, Public Safety, Housing & Development Committee

FROM: Rose Chaparro, City Clerk, (805) 385-7805, rose.chaparro@oxnard.org

SUBJECT: Approval of Minutes.

RECOMMENDATION

That the Community Services, Public Safety, Housing & Development Committee approve the minutes of the June 13, 2023 and July 11, 2023 regular meetings as presented.

BACKGROUND

Approval of Minutes.

STRATEGIC PRIORITIES

This agenda item is a routine operational item.

FINANCIAL IMPACT

There is no financial impact.

Prepared by: Rose Chaparro, City Clerk

ATTACHMENTS

1. MINUTES 06 13 2023 Community Services, Public Safety, Housing & Development
2. MINUTES 07 11 2023 Community Services, Public Safety, Housing & Development

MINUTES
OXNARD CITY COUNCIL
COMMUNITY SERVICES, PUBLIC SAFETY,
HOUSING & DEVELOPMENT COMMITTEE
Regular Meeting
June 13, 2023

A. ROLL CALL, POSTING OF AGENDA, FLAG SALUTE

At 6:45 p.m., Chair Bryan A. MacDonald called to order the regular meeting of the Oxnard City Council Community Services, Public Safety, Housing and Development Committee in the City Hall Council Chambers at 305 W. Third Street, Oxnard, California. The City Clerk called the roll and announced the posting of the agenda. Chair Bryan MacDonald, Member Oscar Madrigal, and Member John C. Zaragoza were present in person.

Staff members Alexander Nguyen, City Manager; Jason Benites, Police Chief; Denise Morehouse, Assistant Chief of Police; Timothy Kelley, Special Operations Commander; Emilio Ramirez, Housing Director; Brenda Lopez, Housing Programs Manager and Dee Lai, Assistant City were present in person.

Consideration of Teleconference Participation pursuant to Assembly Bill 2449.

B. PUBLIC COMMENTS ON ITEMS NOT ON THE AGENDA (None received.)

C. CONSENT AGENDA

1. City Clerk Department
SUBJECT: Approval of Minutes.
RECOMMENDATION: That the Community Services, Public Safety, Housing & Development Committee approve the minutes of the May 23, 2023 regular meeting as presented.

It was moved by Chair MacDonald, seconded by Member Madrigal, to approve the Information/Consent item as presented. VOTE: MacDonald, Madrigal, and Zaragoza voted in favor; the motion carried 3-0.

D. REPORTS

1. Police Department
SUBJECT: Police Department 2022 Military Equipment Use Report.
RECOMMENDATION: That the Community Services, Public Safety, and Housing & Development Committee recommend the City Council receive and file an annual report of the Police Department's military equipment inventory and use.

DRAFT

Timothy Kelley, Special Operations Commander presented and answered the Committee's questions. No public comments were received.

It was moved by Member Zaragoza, seconded by Member Madrigal, to approve the recommended action as presented. VOTE: MacDonald, Madrigal, and Zaragoza voted in favor; the motion carried 3-0.

2. Housing Department
SUBJECT: Housing Authority Low Rent Public Housing and Housing Choice Voucher Program Section 8 Budgets for Fiscal Year 2023-2024.
RECOMMENDATION: That the Community Services, Public Safety, Housing & Development Committee recommend that the Board of Commissioners of the Housing Authority of the City of Oxnard:

1. Adopt a resolution approving the recommended $7,352,123 operating budgets for the Low Rent Public Housing Program for Fiscal Year 2023-2024, as presented for each project area, and approve and authorize the use of $359,597 of unrestricted cash to fund the projected deficit.

2. Adopt a resolution approving the recommended $30,848,417 operating budget for the Housing Choice Voucher Program Section 8 for Fiscal Year 2023-2024 and approve and authorize the use of $304,238 of unrestricted cash to fund the projected deficit.

Emilio Ramirez, Housing Director presented and answered the Committee's questions. No public comments were received.

It was moved by Member Zaragoza, seconded by Member Madrigal, to approve the recommended action as presented. VOTE: MacDonald, Madrigal, and Zaragoza voted in favor; the motion carried 3-0.

3. Housing Department
SUBJECT: First Amendment to Lease with Teatro de Las Americas.
RECOMMENDATION: That the Community Services, Public Safety, Housing & Development Committee recommend that the City Council:

1. Approve a First Amendment to Lease with Teatro de las Americas for the use of property owned by the City of Oxnard and located at 321 West Sixth Street; and

2. Authorize the City Manager to execute the First Amendment to Lease with Teatro de las Americas.

Emilio Ramirez, Housing Director presented and answered the Committee's questions.

Public comments were received from Juan Gonzalez.

It was moved by Chair MacDonald, seconded by Member Zaragoza, to approve the recommended action as presented. VOTE: MacDonald, Madrigal, and Zaragoza voted in favor; the motion carried 3-0.

4. Housing Department
   SUBJECT: Proposal for Foul Weather Sheltering from the Commission on Homelessness.
   RECOMMENDATION: That the Community Services, Public Safety, Housing, and Development Committee provide the City Council with a recommendation regarding the funding and establishment of a Foul Weather Shelter as recommended by the Commission on Homelessness.

Emilio Ramirez, Housing Director presented and answered the Committee's questions. Public comments were received from Yukio Okano.

It was moved by Member Madrigal, seconded by Member Zaragoza, to approve the recommended action as presented. VOTE: MacDonald, Madrigal, and Zaragoza voted in favor; the motion carried 3-0.

5. Police Department
   SUBJECT: Agreement for School Resource Officer (SRO) Services to the Oxnard Union High School District (OUHSD).
   RECOMMENDATION: That the Community Services, Public Safety, Housing, and Development Committee recommend the City Council approve and authorize a cost-sharing agreement between the City of Oxnard (City) and the Oxnard Union High School District (OUHSD or District), from July 1, 2023, to June 30, 2026, for Police School Resource Officer (SRO) Services.

Luis McArthur, Police Commander presented and answered the Committee's questions. No public comments were received.

It was moved by Chair MacDonald, seconded by Member Zaragoza, to approve the recommended action as presented. VOTE: MacDonald, Madrigal, and Zaragoza voted in favor; the motion carried 3-0.

E. ITEMS FOR FUTURE AGENDAS (No requests were made.)

F. ADJOURNMENT

There being no further business on the agenda, and without objection, Chair MacDonald adjourned the meeting at 7:32 p.m.

ROSE CHAPARRO

City Clerk

BRYAN A. MACDONALD

Chair

MINUTES
OXNARD CITY COUNCIL
COMMUNITY SERVICES, PUBLIC SAFETY,
HOUSING & DEVELOPMENT COMMITTEE
Regular Meeting
July 11, 2023

A. ROLL CALL, POSTING OF AGENDA, FLAG SALUTE

At 6:45 p.m., Member John C. Zaragoza called to order the regular meeting of the Oxnard City Council Community Services, Public Safety, Housing and Development Committee in the City Hall Council Chambers at 305 W. Third Street, Oxnard, California. The Assistant City Clerk called the roll and announced the posting of the agenda. Member John C. Zaragoza and Member Oscar Madrigal were present in person. Chair Bryan MacDonald was absent.

Staff members Alexander Nguyen, City Manager; Kenneth Rozell, Chief Assistant City Attorney; Jason Benites, Chief of Police; Denise Morehouse, Assistant Chief of Police; Alexander Hamilton, Fire Chief and Dee Lai, Assistant City Clerk were present in person.

Consideration of Teleconference Participation pursuant to Assembly Bill 2449.

B. PUBLIC COMMENTS ON ITEMS NOT ON THE AGENDA (None Received)

C. CONSENT AGENDA (None.)

D. REPORTS

1. Fire Department

SUBJECT: Ratify submission of application for 2022 Emergency Management Performance Grant (EMPG) (In kind match of $36,393 required).

RECOMMENDATION: That the Community Services, Public Safety, Housing and Development Committee recommend that the Oxnard City Council adopt a resolution:

1. That ratifies the submission of a grant application to the Ventura County Office of Emergency Services for the 2022 Emergency Management Performance Grant (EMPG) in the amount of $36,393 for the purpose of offsetting the salary and benefits of the Emergency Services Manager, and the required salary match of $36,393;
2. That authorizes the City Manager or designee to execute the grant agreement if funds are awarded to the City;
3. That authorizes the Chief Financial Officer or designee to submit financial reports and grant claims, approve budget appropriations for the use of grant

DRAFT

funds and perform all other required financial actions; and

4. That authorizes the Fire Chief or designee to submit non-financial reports.

Alexander Hamilton, Fire Chief presented and answered the Committee's questions. No public comments were received. Discussion ensued among the Committee and staff.

It was moved by Member Madrigal, seconded by Member Zaragoza, to approve the recommended action as presented. VOTE: Madrigal and Zaragoza voted in favor; the motion carried 2-0. Chair MacDonald was absent.

2. Police Department
SUBJECT: Motorola Equipment Purchase.
RECOMMENDATION: That the Community Services, Public Safety, Housing and Development Committee recommend that the City Council approve and authorize the Mayor to execute an agreement with Motorola Solutions to purchase communication equipment in an amount not to exceed $3,217,496.00.

Denise Morehouse, Assistant Chief of Police presented and answered the Committee's questions. No public comments were received. Discussion ensued among the Committee and staff.

It was moved by Member Zaragoza, seconded by Member Madrigal, to approve the recommended action as presented. VOTE: Madrigal and Zaragoza voted in favor; the motion carried 2-0. Chair MacDonald was absent.

E. ITEMS FOR FUTURE AGENDAS (No requests were made.)

F. ADJOURNMENT
There being no further business on the agenda, and without objection, Member Zaragoza adjourned the meeting at 6:54 p.m.

ROSE CHAPARRO	JOHN C. ZARAGOZA
City Clerk	Member

COMMUNITY SERVICES, PUBLIC SAFETY, HOUSING & DEVELOPMENT COMMITTEE AGENDA REPORT

REPORTS
AGENDA ITEM NO. D.1

DATE: July 25, 2023

TO: Community Services, Public Safety, Housing & Development Committee

FROM: Emilio Ramirez, Housing Director, (805) 385-8094, emilio.ramirez@oxnard.org

SUBJECT: Accessibility Remodel Project at Fashion Park and Concord Sites. (10 minutes)

RECOMMENDATION

That the Community Services, Public Safety, Housing & Development Committee recommend that the Board of Commissioners of the Housing Authority of the City of Oxnard approve and authorize execution of the following firm-fixed price contracts:

1. Agreement number A-8532 in the amount of $1,832,249.88 with MDJ Management using funds previously appropriated from the 2023 Capital Fund grant for Section 504 compliance with the American Disabilities Act for properties located at 234 Fashion Park Place, 251 Fashion Park Place, and 257 Fashion Park Place.
2. Agreement number A- 8533 in the amount of $1,221,499.92 with MDJ Management using funds previously appropriated from the 2022 Capital Fund grant for Section 504 compliance with the American Disabilities Act for properties located at 2950 Concord Drive and 2956 Concord Drive.

Please click the following link to view the required Measure M pre-recorded presentation video: https://youtu.be/h_d3thN1zpg

BACKGROUND

This project is part of a multi-phase conversion project that will bring the Housing Authority of the City of Oxnard into compliance with Section 504 of the American Disabilities Act, which establishes a minimum number of dwelling units that must be accessible for individuals with disabilities. As a result of demolishing units at Colonia Village, the Housing Authority of the City of Oxnard lost forty-four accessible units.

The Housing Authority of the City of Oxnard must convert a minimum of twenty-four units to be compliant with the American Disabilities Act. The to be converted units have been selected from each public housing site based on ease of conversion, availability of space and cost effectiveness. Two units have been converted into 504 compliant units at the Pleasant Valley public housing site and five units have been converted at the Plaza Vista public housing site. Currently, there is a 504 compliant unit conversion underway at the Althea public housing site. After the proposed units are converted, the Housing Authority of the City of Oxnard will have to complete twelve additional conversions.

This project involves the accessibility remodeling of existing, two-story, five-bedroom units, which will each be converted into two units. The first-floor unit will be 504 compliant but the second floor will be a regular unit. A total of three units are being remodeled at the Fashion Park public housing site and two units at the

Concord public housing site. Once work is completed, there will be five regular two-bedroom units and five 504 compliant one-bedroom units. This conversion project was anticipated and planned for the Housing Authority of the City of Oxnard's Capital Fund Program Five-Year Action Plan originally adopted on April 6, 2021.

DISCUSSION

The Housing Authority of the City of Oxnard is a member of Sourcewell (formerly known as the National Joint Powers Alliance), which competitively bids for construction tasks with pre-set unit prices and specifications for general construction services including materials, equipment, and labor costs. The California Government Code authorizes public agencies to participate in cooperative purchasing agreements like those established by Sourcewell, while still complying with the local procurement policies. This project is subject to wage requirements of the Davis-Bacon and Related Acts (29 CFR Part 5) and the Section 3 Act of 1968 (24 CFR Part 75).

Staff engaged Gordian, which is authorized by Sourcewell to provide consulting services, to procure a general contractor to complete the contemplated renovation work.

A description of the proposed accessibility remodels at the Fashion Park and Concord site includes:

1. Demolition of existing apartments, work to be performed by a certified hazardous material demolition company
2. Saw cutting of slab, demolition of concrete, and excavation for new plumbing
3. All framing, drywalling, interior paint, flooring, and medium density fiberboard baseboards
4. New electrical and plumbing rough
5. Concrete work (footings and slab for addition, pour back open trenches and sidewalk as required)
6. HVAC ductwork, registers, wall heaters (new forced air unit)
7. New windows, doors, insulation, flooring, kitchens, countertops, fixtures, sinks, appliances, and bathroom fixtures
8. Lath, stucco, roofing, fascia, gutters for new addition, exterior paint of building
9. Site Work: new sidewalks, handicap ramp with truncated domes, handicap striping, signage of handicap stall
10. Remove and replace: all outlets, switches, exterior lighting, interior doors
11. Clean up existing backyard
12. Remove and replace one section of existing vinyl fence to meet ADA width requirements

MDJ Management submitted proposals for the amount of $610,749.96 per unit to be remodeled. Staff reviewed proposals and recommend approval.

STRATEGIC PRIORITIES

This agenda item supports the Quality of Life strategy. The purpose of the Quality of Life strategy is to restore and increase quality services and programs that enrich Oxnard's diverse community, promotes safe neighborhoods, encourages community engagement, and supports our residents in their efforts to improve their quality of life.

FINANCIAL IMPACT

This item does not impact any City Fund. The funding for Agreement A-8532 will be from the Housing Authority of the City of Oxnard 2023 Capital Fund Grant. The total Capital Fund allocation was $2,626,497. After deducting debt service, management fees and the cost of this agreement the remaining fund balance will

be $90,000. The funding for Agreement A-8533 will be from the 2022 Capital Fund Grant which was for a total allocation of $2,535,857. After deducting debt service, management fees and the cost of this agreement the remaining fund balance will be $19,000.

Prepared by: Emilio Ramirez, Housing Director

ATTACHMENTS

1. Agreement A-8532
2. Agreement A-8533
3. PowerPoint Presentation

CAPITAL IMPROVEMENT CONTRACT

Contract No: **A-8532**
Name of Contractor: MDJ Management
Address: 531 Main Street, #611, El Segundo, CA 90245

Project description: Fashion Park Apartments ADA Conversion

This Capital Improvement Contract (**"Contract")** is made at Oxnard, California, as of this 19th day of September 2023 between the City of Oxnard Housing Authority, called herein the **"Authority"**, and the above-named contractor (**"Contractor"**) for the construction of the capital improvement project described herein. The parties hereto agree as follows:

I. Type of Contract

This contract is a firm-fixed price contract as defined by 2CFR Part 200 and the Department of Housing and Urban Development (HUD) Handbook 7460.8, Rev. 2.

2. Contract Price

Contractor shall perform the scope of work per the detailed scope of work per approved plans submitted for the ADA unit conversion at 234, 251 and 257 Fashion Park. Authority shall pay Contractor, as described in **Exhibit A**, attached hereto and incorporated herein by this reference, in full payment for said work, the following sum: **$1,832,249.88.**

The above sum includes all taxes and the costs of any required bonds.

3. Payment Schedule

Authority shall pay Contractor no later than 30 calendar days after Authority accepts Contractor's invoices and Authority shall make final payment no later than 60 calendar days after Authority has issued and approved a certificate of completion for the work contemplated herein, provided that the Authority may withhold from progress payments an amount equal to 5 percent of the progress payment and may withhold from final payment an amount sufficient to protect the Authority from disputes equivalent to 150 percent of the value of any disputed amount of work.

4. Scope of Work

Contractor shall furnish all tools, equipment, apparatus, facilities, labor and materials necessary to, and shall perform and complete in a good, safe and workmanlike manner, the work described in the approved plans.

5. Contract Documents

The complete Contract consists of all the following, which are specifically incorporated herein by reference:

a. Change Orders
b. Contract Amendments –
c. This Contract
d. Amendments to HUD Form 5370
e. HUD Form 5370 General Conditions for Construction Contracts – Public Housing Programs
f. Specifications
g. Plans
h. Permits
i. Contractor's bid proposal and list of subcontractors (if applicable).
j. Performance and payment bonds as required by the specifications and applicable law. Unless otherwise specified, each such bond shall be 100 percent of the Contract price.
k. Insurance as required by the specifications and applicable law.
l. All applicable wage determinations, safety and health regulations, non-discrimination provisions, labor standards, and requirements if the Contract is federally assisted. This includes but is not limited to such items enumerated in the specifications and addenda thereto.

6. Indemnity

Contractor agrees to indemnify, hold harmless and defend Authority, its Commission, and each member thereof, and every officer, employee, representative or agent of Authority, from any and all liability, claims, demands, actions, damages (whether in contract or tort, including personal injury, death at any time, or property damage), costs and financial loss, including all costs and expenses and fees of litigation or arbitration, that arise directly or indirectly form any acts or omissions related to this Agreement performed by Contractor or its agents, employees, Subcontractors, Contractors, and other persons acting on Contractor's behalf. This agreement to indemnify, hold harmless and defend shall apply whether such acts or omissions are the product of active negligence, passive negligence, willfulness or acts for which Contractor or its agents, employees, subcontractors, consultants and other persons acting on Contractor's behalf would be held strictly liable.

7. Time for Performance

The time limit for the completion of the work is **540 working days** after receipt of the Notice to Proceed.

Contractor shall not perform any work until the Authority issues a Notice to Proceed. Work will be completed within the time limit specified above and in the Notice to Proceed.

8. Acknowledgement

Contractor by signing hereunder acknowledges that he has reviewed all the foregoing documents and agrees with the requirements, conditions and covenants contained therein.

The parties agree that this Agreement may be transmitted and signed by electronic or digital means by either/any or both/all Parties and that such signatures shall have the same force and effect as original signatures, in accordance with California Government Code Section 16.5 and California Civil Code Section 1633.7.

CITY OF OXNARD
HOUSING AUTHORITY

_____
John C. Zaragoza
Chairman

MDJ MANAGEMENT

_____
Matthew McMillon
President

APPROVED AS TO FORM:

_____
Stephen M. Fischer,
Housing General Counsel

APPROVED AS TO INSURANCE:

_____
Rhonda Hodge
Housing Finance Officer

APPROVED AS TO COMPLIANCE:

_____
Rhonda Hodge
Contract Administrator

GENERAL CONDITIONS

Work Hours:

From 8:00 AM to 5:00 PM max. Including 1-hour lunch.
No work is allowed Saturdays, Sundays and during any official holidays.

Safety and Security:
The contractors are required to secure the work area during the work hours, lunch hours, weekends, and holidays. The contractors shall secure and render safe the entire construction area at the end of each working day. Work areas must be well barricaded and flagged, and all precautions should be taken to avoid injury or damage to any person or property and shall protect and indemnify the Housing against any claim or liability arising from or based on the lack of proper safeguards or negligence whether by it or its agents, employees or Subcontractors.

Compliance with all Laws:
The contractors shall comply with all applicable federal, State and local laws, ordinances, codes and regulations in force at the time the contractors perform pursuant to the contract documents.

Project Schedule:
The contractor is expected to complete the job in not to exceed five hundred forty **(540) working days**.

Construction Debris:
Due to the nature of the job, the contractor is responsible for hauling away debris.

Storage Bin
The contractor shall provide bins and/or containers for temporary storage.

Warranty:
The contractor shall warranty the work for a period of **One (1) year** against workmanship.

Final Walkthrough, and Sign off:
The contractor is required to call for a final walk through with the project manager and/ or the Housing Authority staff after completion of the project. Upon approval, the contractor may bill the Housing Authority for said work. All the payments will be pending obtaining a final sign off from the City inspector and turning in those permits.

EXHIBIT A

GORDIAN®

Work Order Signature Document

EZIQC Contract No.: CA-R7-GB06-123021-MDJ

[X] **New Work Order** [ ] **Modify an Existing Work Order**

Work Order Number.:	116755.00	Work Order Date:	06/06/2023
Work Order Title:	Fashion Park Unit 234 Conversion		
Owner Name:	Oxnard Housing Authority	Contractor Name:	MDJ Management
Contact:	Fredi Contreras	Contact:	Matt McMillon
Phone:	805-890-8319	Phone:	310-490-1521

Work to be Performed

Work to be performed as per the Final Detailed Scope of Work Attached and as per the terms and conditions of Sourcewell EZIQC Contract No CA-R7-GB06-123021-MDJ.

Brief Work Order Description:

Time of Performance Estimated Start Date:
Estimated Completion Date:

Liquidated Damages Will apply: [ ] Will not apply: [X]

Work Order Firm Fixed Price: $610,749.96

Owner Purchase Order Number:

Approvals

Oxnard Housing Authority Date

MDJ Management Date

Detailed Scope of Work

To: Matt McMillon
MDJ Management
531 Main St #611
El Segundo, CA 90245
310-490-1521

From: Fredi Contreras
Oxnard Housing Authority
300 N. Marquita Street
Oxnard, CA 93030
805-890-8319

Date Printed: June 06, 2023

Work Order Number: 116755.00

Work Order Title: Fashion Park Unit 234 Conversion

Brief Scope:

☐ **Preliminary** ☐ **Revised** ☒ **Final**

The following items detail the scope of work as discussed at the site. All requirements necessary to accomplish the items set forth below shall be considered part of this scope of work.

See attached

Subject to the terms and conditions of ezIQC Contract **CA-R7-GB06-123021-MDJ**.

MDJ Management _____ Date _____

Oxnard Housing Authority _____ Date _____

MDJ Management, LLC
License # 1044711
DIR # 1000061313
531 Main St. #611 El Segundo CA 90245
310-490-1521

Job Name: 234 Fashion Park ADA Conversion
Location: 234 Fashion Park Oxnard, CA 93036
Customer: Oxnard Housing Authority

Submission Date: 5/31/23

Detailed Scope of Work

Demolition

- Demolition of existing apartment per plans
- Per Asbestos Survey report provided by client all walls, ceilings and floors to be considered ACM
    - Demolition of unit to be performed by certified hazardous material demolition company

Installation/Buildout

- Saw cutting of slab and demolition of concrete for new plumbing
- Excavation for new plumbing and new concrete footings for addition
- All framing throughout including new walls and soffits
- New rough and finish plumbing throughout
- New electrical rough including new panel per plan
- Concrete work:
    - Pour new footings for addition
    - Pour back all open trenches inside the unit
    - Pour slab for addition
    - Our sidewalk as required
- New windows and doors
- New Insulation
- HVAC ductwork, registers, and wall heaters.
    - Includes new forced air unit
- Drywall throughout
- Lath, stucco, and color coat to match existing
- Roofing, fascia, and gutters for new addition
- Interior paint
- New Flooring and base
- New kitchens, countertops, fixtures, sinks and appliances.

- New bathroom fixtures per plan
- Paint exterior of building
- Site work:
    - New sidewalks
    - Handicap ramp with truncated domes
    - Handicap striping
    - New signage at Handicap stall

Installation/Buildout added by Client NOT included on plans

- Remove and replace all outlets and switches throughout, even on all existing walls
- Remove and replace exterior lighting with LED lighting
    - Match existing 3 fixtures
- Install MDF baseboards
    - Instead of called out cove base
- Remove and replace all interior doors. Complete list of doors from plans as well as clients request:
    - Demo of 3 utility closet, 2 sliding closet, 5 bedroom, and 2 bathroom doors
    - Installation of 2 utility closet, 3 sliding closet, 3 bedroom, 2 bathroom doors, and 1 front door
- Clean up existing back yard, the weeds are 5 feet high
    - Includes weed weed whacking and removal of all dead weeds
- Remove and replace one section of vinyl fence because it is not wide enough for ADA width along concrete path to front door
    - 45 feet x 6 feet high
    - (1) One 4' Gate
    - Includes widening the concrete by one foot

Notes:

- All work to be performed per plans provided to MDJ
- Any additional add on items will be at the request of Customer. Any adjustment shall be an additional cost.
- Price includes all labor (**Normal Working Hours - Davis Bacon Wages**), materials, equipment to complete this scope of work.
- Construction Exclusions:
    - New Washer and Dryer not included in contract.

CLARIFICATIONS AND EXCLUSIONS:

- Warranty
    - One year warranty against workmanship
    - Manufacturer's warranty varies
- We exclude plans, permits, permit fees, related fees, testing, inspection, survey, and engineering unless specified above
- We exclude utilities and hazardous or contaminated material.
- Construction water, power, and sanitary facilities available on site for MDJ's use at no cost.
- We exclude premium time.
- We exclude anything not specifically mentioned above.
- MDJ reserves the right to review, change, and/or delete any provisions of any prime contract or subcontract, which results from this quotation.

- All terms to be net 30 days in full upon receipt of invoice. Interest will be charged at the rate of 2% monthly on the unpaid balance.

BID PRICE: See Price Proposal

All work to be completed in a substantial and workmanlike manner according to standard practices for the sum of **See Price Proposal.** Any additional add on items will be at the request of Customer. Any adjustment shall be an additional cost.

Bid price is good for thirty (30) days only.

Any controversy or claim based on, arising out of, or relating to this agreement, or breach thereof, including any claim based on the work performed pursuant to this agreement, shall be submitted to the American Arbitration Association for binding arbitration in accordance with its rules. If any arbitration, legal action is brought to enforce this agreement, or arising out of or relating to the agreement, the prevailing party shall be entitled to recover from the non-prevailing party reasonable attorney fees and costs incurred, in addition to any and all other relief to which that party may be entitled.

Submitted by:

Matthew McMillon
President MDJ
310.490.1521
matt@buildwithmdj.com

Contractor's Price Proposal - Summary

Date: June 06, 2023

Re:

IQC Master Contract #:	CA-R7-GB06-123021-MDJ
Work Order #:	116755.00
Owner PO #:	
Title:	Fashion Park Unit 234 Conversion
Contractor:	MDJ Management
Proposal Value:	$610,749.96

Section - 01	**$27,922.15**
Section - 02	**$124,779.67**
Section - 03	**$44,628.54**
Section - 06	**$30,807.26**
Section - 07	**$39,946.76**
Section - 08	**$16,937.65**
Section - 09	**$136,489.60**
Section - 10	**$1,650.96**
Section - 11	**$6,131.21**
Section - 12	**$7,227.87**
Section - 22	**$61,651.38**
Section - 23	**$30,704.85**
Section - 26	**$57,035.70**
Section - 31	**$17,571.02**
Section - 32	**$7,265.34**
Proposal Total	**$610,749.96**

Thisl total represents the correct total for the proposal. Any discrepancy between line totals, sub-totals and the proposal total is due to rounding.

The Percentage of NPP on this Proposal: %

Contractor's Price Proposal - Detail

Date: June 06, 2023

Re:

IQC Master Contract #:	CA-R7-GB06-123021-MDJ
Work Order #:	116755.00
Owner PO #:	
Title:	Fashion Park Unit 234 Conversion
Contractor:	MDJ Management
Proposal Value:	$610,749.96

	Sect.	Item	Mod.	UOM	Description	Line Total
Labor	Equip.	Material	(Excludes)			

Section - 01

1	01 22 16	00 0002		EA	Reimbursable FeesReimbursable Fees will be paid to the contractor for eligible costs as directed by Owner. Insert the appropriate quantity to adjust the base cost to the actual Reimbursable Fee. If there are multiple Reimbursable Fees, list each one separately and add a comment in the "note" block to identify the Reimbursable Fee (e.g. sidewalk closure, road cut, various permits, extended warranty, expedited shipping costs, etc.). A copy of each receipt shall be submitted with the Price Proposal.	$13,147.20

	Quantity		Unit Price		Factor	=	Total
Installation	11,952.00	x	1.00	x	1.1000	=	13,147.20

Bond = $597,602 x 2%

2	01 74 19	00 0016		EA	40 CY Dumpster (5 Ton) "Construction Debris"Includes delivery of dumpster, rental cost, pick-up cost, hauling, and disposal fee. Non-hazardous material.	$11,002.63

	Quantity		Unit Price		Factor	=	Total
Installation	12.00	x	809.97	x	1.1320	=	11,002.63

10 dumpsters for abatement debris: cabinets, drywall from entire house, shower, toilet, stucco, insulation, ...
2 dumpsters for construction debris: drywall cuts, lumber cuts, basic trash

3	01 74 19	00 0019		EA	15 CY Low-Boy Dumpster Mixed RecyclableFor mixed dirt, rock, concrete brick or asphalt with no trash or organics. Includes service to deliver and pick-up dumpster, hauling, rental and disposal fee.	$3,772.32

	Quantity		Unit Price		Factor	=	Total
Installation	4.00	x	833.11	x	1.1320	=	3,772.32

for removal of excavated soil for footings, slab, trenching

Subtotal for Section - 01 **$27,922.15**

Section - 02

4	02 41 19	13 0063		LF	Rod Reinforced Concrete Slab Up To 4" Depth, Saw Cut	$2,499.46

	Quantity		Unit Price		Factor	=	Total
Installation	400.00	x	5.52	x	1.1320	=	2,499.46

sawcut existing slab to trench for new electrical and plumbing runs as needed per plans

5	02 82 33	00 0067		SF	>2,500 To 10,000 SF, Single Layer Gypsum Wall Board, Asbestos Abatement And Disposal	$62,951.52

	Quantity		Unit Price		Factor	=	Total
Installation	6,684.00	x	8.32	x	1.1320	=	62,951.52

demolition throughout. All drywall mud is hot. ceilings and walls

6	02 82 33	00 0074		SF	>500 To 2,500 SF, Gypsum Wall Board (Or Backer Board) With Ceramic Tile And Mastic, Asbestos Abatement And Disposal	$12,439.55

	Quantity		Unit Price		Factor	=	Total
Installation	550.00	x	19.98	x	1.1320	=	12,439.55

demolition of bathrooms tile and backer board walls and floor as well as kitchen tile

7	02 82 33	00 0087		SF	>500 To 2,500 SF, Spray On Acoustical Ceiling, Asbestos Abatement And Disposal	$16,659.92

	Quantity		Unit Price		Factor	=	Total
Installation	1,564.00	x	9.41	x	1.1320	=	16,659.92

demolition

Contractor's Price Proposal - Detail Continues..

Work Order Number: 116755.00
Work Order Title: Fashion Park Unit 234 Conversion

Section - 02

8	02 82 33 00 0101		SF	>500 To 2,500 SF, Single Layer Or First Of Multiple Layers, Floor Tile, Asbestos Abatement And Disposal									$10,959.07
			Installation	Quantity 1,564.00	x	Unit Price 6.19	x	Factor 1.1320	=	Total 10,959.07			
			demolition of 2 layers of floor tile										
9	02 82 33 00 0101	0001		For Each Additional Layer, Add									$2,744.19
			Installation	Quantity 1,564.00	x	Unit Price 1.55	x	Factor 1.1320	=	Total 2,744.19			
10	02 82 33 00 0245		CF	>100 To 250 CF, Asbestos Contaminated Debris, Asbestos Abatement And Disposal									$13,881.15
			Installation	Quantity 250.00	x	Unit Price 49.05	x	Factor 1.1320	=	Total 13,881.15			
			demolition of all cabinets and vanities per plans. They are attached to the walls so removal would disturb drywall material that is hot. This is for kitchen and bathroom										
11	02 82 33 00 0333		SF	High Efficiency Particulate Air (HEPA) Vacuum And Cleaning Of Contaminated Area									$1,186.20
			Installation	Quantity 1,564.00	x	Unit Price 0.67	x	Factor 1.1320	=	Total 1,186.20			
			demolition part of abatement procedures										
12	02 89 00 00 0021		EA	3 Stage Portable Personnel Decontamination Wash FacilityIncludes connection to negative air system.									$907.07
			Installation	Quantity 1.00	x	Unit Price 801.30	x	Factor 1.1320	=	Total 907.07			
			demolition part of abatement procedures										
13	02 89 00 00 0023		EA	Portable Waste Decontamination UnitIncludes connection to negative air system.									$551.54
			Installation	Quantity 1.00	x	Unit Price 487.23	x	Factor 1.1320	=	Total 551.54			
			demolition										

Subtotal for Section - 02 **$124,779.67**

Section - 03

14	03 11 13 00 0003		SF	Continuous Footings Foundation Wood Formwork									$1,882.74
			Installation	Quantity 240.00	x	Unit Price 6.93	x	Factor 1.1320	=	Total 1,882.74			
			footing for new addition										
15	03 11 13 00 0003	0001		For <1,000, Add									$350.47
			Installation	Quantity 240.00	x	Unit Price 1.29	x	Factor 1.1320	=	Total 350.47			
16	03 11 13 00 0009		LF	Up To 6" High Slab Edge and Block-Out Wood Formwork									$699.89
			Installation	Quantity 116.00	x	Unit Price 5.33	x	Factor 1.1320	=	Total 699.89			
			for new addition										
17	03 11 13 00 0009	0004		For Up To 250, Add									$69.28
			Installation	Quantity 60.00	x	Unit Price 1.02	x	Factor 1.1320	=	Total 69.28			
18	03 21 11 00 0251		EA	Dowels Or Hairpin, 1/2" x 30" Length, Drilled And Epoxy In Concrete, 6" Embedment									$5,682.36
			Installation	Quantity 225.00	x	Unit Price 22.31	x	Factor 1.1320	=	Total 5,682.36			
			200 LF of trenching. Epoxy and Dowel every 2'. One on each side. For reinforcement and tying into existing slab adjacent. 25 dowels to attach from porch sidewalk to existing .										

Contractor's Price Proposal - Detail Continues..

Work Order Number: 116755.00
Work Order Title: Fashion Park Unit 234 Conversion

Section - 03

19	03 21 13 00 0093		LF	#6, Grade 50, Slab On Grade, Galvanized Steel Reinforcement Bar								$2,010.43
					Quantity		Unit Price		Factor		Total	
				Installation	800.00	x	2.22	x	1.1320	=	2,010.43	
				200 LF of trenching and 600 LF for slab, porch, and footings. Installation of rebar every 2'.								
20	03 30 53 00 0007		CF	Hand Mix And Place ConcreteFor use where conventional equipment access is limited or when directed by the owner.								$6,592.77
					Quantity		Unit Price		Factor		Total	
				Installation	200.00	x	29.12	x	1.1320	=	6,592.77	
				patch back trenching in existing slab								
21	03 31 13 00 0003		SF	4" 3,000 PSI Slab On Grade Concrete Slabs Assembly								$1,768.18
					Quantity		Unit Price		Factor		Total	
				Installation	200.00	x	7.81	x	1.1320	=	1,768.18	
				for new addition								
22	03 31 13 00 0003	0156		For Up To 500, Add								$681.46
					Quantity		Unit Price		Factor		Total	
				Installation	200.00	x	3.01	x	1.1320	=	681.46	
23	03 31 13 00 0023		CY	Concrete Pump, Place 3,000 PSI Concrete Spread FootingsExcludes pumping equipment.								$14,833.73
					Quantity		Unit Price		Factor		Total	
				Installation	50.00	x	262.08	x	1.1320	=	14,833.73	
				24 CY footing for new addition. 26 CY for Front porch/sloped walk								
24	03 31 13 00 0023	0040		For >20 To 50, Add								$638.45
					Quantity		Unit Price		Factor		Total	
				Installation	50.00	x	11.28	x	1.1320	=	638.45	
25	03 54 16 00 0005		SF	1/2" Thick Self Leveling Cementitious Underlayment For FloorsIncluding Surface Preparation								$9,418.78
					Quantity		Unit Price		Factor		Total	
				Installation	1,564.00	x	5.32	x	1.1320	=	9,418.78	
				self leveling of floors for prior to installation of new vinyl plank flooring								

Subtotal for Section - 03 **$44,628.54**

Section - 06

26	06 11 16 00 0061		SF	2" x 4" Wood Wall Framing At 16" On Center								$2,351.16
					Quantity		Unit Price		Factor		Total	
				Installation	950.00	x	1.58	x	1.1320	=	1,699.13	
				Demolition	800.00	x	0.72	x	1.1320	=	652.03	
				for new walls, new addition, and soffits. Couple walls require double stacked 2x4 staggered A-602								
27	06 11 16 00 0062		SF	2" x 6" Wood Wall Framing At 16" On Center								$616.94
					Quantity		Unit Price		Factor		Total	
				Installation	250.00	x	2.18	x	1.1320	=	616.94	
				2x6 wall per plans								
28	06 11 16 00 0062	0004		For >200 To 500, Add								$101.88
					Quantity		Unit Price		Factor		Total	
				Installation	250.00	x	0.36	x	1.1320	=	101.88	
29	06 11 16 00 0063		SF	2" x 8" Wood Wall Framing At 16" On Center								$263.53
					Quantity		Unit Price		Factor		Total	
				Installation	80.00	x	2.91	x	1.1320	=	263.53	
				2x8 wall per plans								

Contractor's Price Proposal - Detail Continues..

Work Order Number: 116755.00
Work Order Title: Fashion Park Unit 234 Conversion

Section - 06

30	06 11 16 00 0063	0003		For Up To 200, Add									$86.94
			Installation		Quantity 80.00	x	Unit Price 0.96	x	Factor 1.1320	=	Total 86.94		
31	06 11 16 00 0179		LF	2" x 4" Pressure Treated Lumber, For Roofing Nailers									$871.64
			Installation		Quantity 250.00	x	Unit Price 3.08	x	Factor 1.1320	=	Total 871.64		
			for roof framing										
32	06 11 16 00 0183		LF	2" x 4" Pressure Treated Lumber, For Roofing Sleepers									$464.12
			Installation		Quantity 250.00	x	Unit Price 1.64	x	Factor 1.1320	=	Total 464.12		
			for roof framing										
33	06 16 33 00 0006		SF	3/4" Thick CDX Plywood Roof DeckingApplied to wood rafters.									$690.52
			Installation		Quantity 250.00	x	Unit Price 2.44	x	Factor 1.1320	=	Total 690.52		
			for new addition roof										
34	06 16 33 00 0006	0040		For Tongue And Groove, Add									$19.81
			Installation		Quantity 250.00	x	Unit Price 0.07	x	Factor 1.1320	=	Total 19.81		
35	06 16 33 00 0012		SF	1/2" Interior BC Plywood Wall SheathingApplied to wall studs.									$1,036.91
			Installation		Quantity 400.00	x	Unit Price 2.29	x	Factor 1.1320	=	Total 1,036.91		
			for new addition per plans										
36	06 16 33 00 0012	0005		For Shear Wall Construction, Add									$135.84
			Installation		Quantity 400.00	x	Unit Price 0.30	x	Factor 1.1320	=	Total 135.84		
37	06 16 33 00 0012	0006		For Exterior CC Grade Plywood, Add									$54.34
			Installation		Quantity 400.00	x	Unit Price 0.12	x	Factor 1.1320	=	Total 54.34		
38	06 16 33 00 0020		SF	3/4" CD Grade Plywood Floor DeckingApplied to floor or joists.									$5,169.71
			Installation		Quantity 1,564.00	x	Unit Price 2.36	x	Factor 1.1320	=	Total 4,178.26		
			Demolition		1,564.00	x	0.56	x	1.1320	=	991.45		
			for new floor decking per plans FSI/A-602. plans require glue										
39	06 16 33 00 0020	0038		For Exterior Glue, Add									$1,593.40
			Installation		Quantity 15,640.00	x	Unit Price 0.09	x	Factor 1.1320	=	Total 1,593.40		
40	06 41 13 00 0225		EA	15" Wide, 35" High x 23-3/4" Deep, Single Drawer and Single Door, Solid Wood Face Frame, Thermofoil Door and Drawer Front, Base Cabinet									$736.43
			Installation		Quantity 2.00	x	Unit Price 325.28	x	Factor 1.1320	=	Total 736.43		
			demolition of 1 kitchen and installation of 2 new kitchen cabinets per plans										
41	06 41 13 00 0225	0126		For Solid Wood Drawers, Dovetail Joints And Full Extension Drawer Guides, Add									$231.72
			Installation		Quantity 2.00	x	Unit Price 102.35	x	Factor 1.1320	=	Total 231.72		
42	06 41 13 00 0225	0130		For All Plywood Box Construction, Add									$241.55
			Installation		Quantity 2.00	x	Unit Price 106.69	x	Factor 1.1320	=	Total 241.55		

Contractor's Price Proposal - Detail Continues..

Work Order Number: 116755.00
Work Order Title: Fashion Park Unit 234 Conversion

Section - 06

43	06 41 13 00 0226		EA	18" Wide, 35" High x 23-3/4" Deep, Single Drawer and Single Door, Solid Wood Face Frame, Thermofoil Door and Drawer Front, Base Cabinet									$770.08
			Installation	Quantity 2.00	x	Unit Price 340.14	x	Factor 1.1320	=	Total 770.08			
				demolition of 1 kitchen and installation of 2 new kitchen cabinets per plans									
44	06 41 13 00 0226	0126		For Solid Wood Drawers, Dovetail Joints And Full Extension Drawer Guides, Add									$231.72
			Installation	Quantity 2.00	x	Unit Price 102.35	x	Factor 1.1320	=	Total 231.72			
45	06 41 13 00 0226	0130		For All Plywood Box Construction, Add									$241.55
			Installation	Quantity 2.00	x	Unit Price 106.69	x	Factor 1.1320	=	Total 241.55			
46	06 41 13 00 0228		EA	24" Wide, 35" High x 23-3/4" Deep, Single Drawer and Single Door, Solid Wood Face Frame, Thermofoil Door and Drawer Front, Base Cabinet									$460.91
			Installation	Quantity 1.00	x	Unit Price 407.16	x	Factor 1.1320	=	Total 460.91			
				demolition of 1 kitchen and installation of 2 new kitchen cabinets per plans									
47	06 41 13 00 0228	0126		For Solid Wood Drawers, Dovetail Joints And Full Extension Drawer Guides, Add									$115.86
			Installation	Quantity 1.00	x	Unit Price 102.35	x	Factor 1.1320	=	Total 115.86			
48	06 41 13 00 0228	0130		For All Plywood Box Construction, Add									$120.77
			Installation	Quantity 1.00	x	Unit Price 106.69	x	Factor 1.1320	=	Total 120.77			
49	06 41 13 00 0231		EA	33" Wide, 35" High x 23-3/4" Deep, Single Drawer and Double Door, Solid Wood Face Frame, Thermofoil Door and Drawer Front, Base Cabinet									$1,098.81
			Installation	Quantity 2.00	x	Unit Price 485.34	x	Factor 1.1320	=	Total 1,098.81			
				demolition of 1 kitchen and installation of 2 new kitchen cabinets per plans									
50	06 41 13 00 0231	0126		For Solid Wood Drawers, Dovetail Joints And Full Extension Drawer Guides, Add									$231.72
			Installation	Quantity 2.00	x	Unit Price 102.35	x	Factor 1.1320	=	Total 231.72			
51	06 41 13 00 0231	0130		For All Plywood Box Construction, Add									$241.55
			Installation	Quantity 2.00	x	Unit Price 106.69	x	Factor 1.1320	=	Total 241.55			
52	06 41 13 00 0232		EA	36" Wide, 35" High x 23-3/4" Deep, Single Drawer and Double Door, Solid Wood Face Frame, Thermofoil Door and Drawer Front, Base Cabinet									$1,133.00
			Installation	Quantity 2.00	x	Unit Price 500.44	x	Factor 1.1320	=	Total 1,133.00			
				demolition of 1 kitchen and installation of 2 new kitchen cabinets per plans									
53	06 41 13 00 0232	0126		For Solid Wood Drawers, Dovetail Joints And Full Extension Drawer Guides, Add									$231.72
			Installation	Quantity 2.00	x	Unit Price 102.35	x	Factor 1.1320	=	Total 231.72			
54	06 41 13 00 0232	0130		For All Plywood Box Construction, Add									$241.55
			Installation	Quantity 2.00	x	Unit Price 106.69	x	Factor 1.1320	=	Total 241.55			
55	06 41 13 00 0248		EA	15" Wide, 35" High x 23-3/4" Deep, Four Drawer Base, Solid Wood Face Frame and Thermofoil Drawer Fronts, Base Cabinet									$881.74
			Installation	Quantity 2.00	x	Unit Price 389.46	x	Factor 1.1320	=	Total 881.74			
				demolition of 1 kitchen and installation of 2 new kitchen cabinets per plans									

Contractor's Price Proposal - Detail Continues..

Work Order Number: 116755.00
Work Order Title: Fashion Park Unit 234 Conversion

Section - 06

56	06 41 13 00 0248	0129		For Solid Wood Drawers, Dovetail Joints And Full Extension Drawer Guides, Add										$926.86
			Installation	Quantity		Unit Price		Factor		Total				
				2.00	x	409.39	x	1.1320	=	926.86				
57	06 41 13 00 0248	0130		For All Plywood Box Construction, Add										$241.55
			Installation	Quantity		Unit Price		Factor		Total				
				2.00	x	106.69	x	1.1320	=	241.55				
58	06 41 13 00 0258		EA	33" Wide, 12" High x 12" Deep, Double Door, Solid Wood Face Frame and Thermofoil Doors, Wall Cabinet										$331.44
			Installation	Quantity		Unit Price		Factor		Total				
				1.00	x	292.79	x	1.1320	=	331.44				
				demolition of 1 kitchen and installation of 2 new kitchen cabinets per plans										
59	06 41 13 00 0258	0131		For All Plywood Box Construction, Add										$64.81
			Installation	Quantity		Unit Price		Factor		Total				
				1.00	x	57.25	x	1.1320	=	64.81				
60	06 41 13 00 0259		EA	36" Wide, 12" High x 12" Deep, Double Door, Solid Wood Face Frame and Thermofoil Doors, Wall Cabinet										$365.34
			Installation	Quantity		Unit Price		Factor		Total				
				1.00	x	322.74	x	1.1320	=	365.34				
				demolition of 1 kitchen and installation of 2 new kitchen cabinets per plans										
61	06 41 13 00 0259	0131		For All Plywood Box Construction, Add										$64.81
			Installation	Quantity		Unit Price		Factor		Total				
				1.00	x	57.25	x	1.1320	=	64.81				
62	06 41 13 00 0278		EA	30" Wide, 18" High x 12" Deep, Double Doors, Solid Wood Face Frame and Thermofoil Doors, Wall Cabinet										$722.69
			Installation	Quantity		Unit Price		Factor		Total				
				2.00	x	319.21	x	1.1320	=	722.69				
				demolition of 1 kitchen and installation of 2 new kitchen cabinets per plans										
63	06 41 13 00 0278	0131		For All Plywood Box Construction, Add										$129.61
			Installation	Quantity		Unit Price		Factor		Total				
				2.00	x	57.25	x	1.1320	=	129.61				
64	06 41 13 00 0282		EA	12" Wide, 30" High x 12" Deep, Single Door, Solid Wood Face Frame and Thermofoil Door, Wall Cabinet										$597.90
			Installation	Quantity		Unit Price		Factor		Total				
				2.00	x	264.09	x	1.1320	=	597.90				
				demolition of 1 kitchen and installation of 2 new kitchen cabinets per plans										
65	06 41 13 00 0282	0131		For All Plywood Box Construction, Add										$129.61
			Installation	Quantity		Unit Price		Factor		Total				
				2.00	x	57.25	x	1.1320	=	129.61				
66	06 41 13 00 0283		EA	15" Wide, 30" High x 12" Deep, Single Door, Solid Wood Face Frame and Thermofoil Door, Wall Cabinet										$325.62
			Installation	Quantity		Unit Price		Factor		Total				
				1.00	x	287.65	x	1.1320	=	325.62				
				demolition of 1 kitchen and installation of 2 new kitchen cabinets per plans										
67	06 41 13 00 0283	0131		For All Plywood Box Construction, Add										$64.81
			Installation	Quantity		Unit Price		Factor		Total				
				1.00	x	57.25	x	1.1320	=	64.81				
68	06 41 13 00 0283		EA	15" Wide, 30" High x 12" Deep, Single Door, Solid Wood Face Frame and Thermofoil Door, Wall Cabinet										$325.62
			Installation	Quantity		Unit Price		Factor		Total				
				1.00	x	287.65	x	1.1320	=	325.62				
				demolition of 1 kitchen and installation of 2 new kitchen cabinets per plans										

Contractor's Price Proposal - Detail Continues..

Work Order Number: 116755.00
Work Order Title: Fashion Park Unit 234 Conversion

Section - 06

69	06 41 13 00 0283	0131		For All Plywood Box Construction, Add								$64.81
			Installation	Quantity 1.00	x	Unit Price 57.25	x	Factor 1.1320	=	Total 64.81		
70	06 41 13 00 0284		EA	18" Wide, 30" High x 12" Deep, Single Door, Solid Wood Face Frame and Thermofoil Door, Wall Cabinet								$694.28
			Installation	Quantity 2.00	x	Unit Price 306.66	x	Factor 1.1320	=	Total 694.28		
				demolition of 1 kitchen and installation of 2 new kitchen cabinets per plans								
71	06 41 13 00 0284	0131		For All Plywood Box Construction, Add								$129.61
			Installation	Quantity 2.00	x	Unit Price 57.25	x	Factor 1.1320	=	Total 129.61		
72	06 41 13 00 0289		EA	33" Wide, 30" High x 12" Deep, Double Doors, Solid Wood Face Frame and Thermofoil Doors, Wall Cabinet								$974.72
			Installation	Quantity 2.00	x	Unit Price 430.53	x	Factor 1.1320	=	Total 974.72		
				demolition of 1 kitchen and installation of 2 new kitchen cabinets per plans								
73	06 41 13 00 0289	0131		For All Plywood Box Construction, Add								$129.61
			Installation	Quantity 2.00	x	Unit Price 57.25	x	Factor 1.1320	=	Total 129.61		
74	06 41 13 00 0329		EA	36" Wide, 84" High x 24" Deep, Four Doors, Solid Wood Face Frame and Thermofoil Doors, Pantry Cabinet								$1,462.41
			Installation	Quantity 1.00	x	Unit Price 1,291.88	x	Factor 1.1320	=	Total 1,462.41		
				demolition of 1 kitchen and installation of 2 new kitchen cabinets per plans								
75	06 41 13 00 0329	0132		For All Plywood Box Construction, Add								$239.58
			Installation	Quantity 1.00	x	Unit Price 211.64	x	Factor 1.1320	=	Total 239.58		
76	06 41 93 00 0007		EA	7" To 8-1/2", Flat Cabinet Pull Handle								$2,154.15
			Installation	Quantity 54.00	x	Unit Price 35.24	x	Factor 1.1320	=	Total 2,154.15		
				demolition of 1 kitchen and installation of 2 new kitchen cabinets per plans								

Subtotal for Section - 06 **$30,807.26**

Section - 07

77	07 21 16 00 0006		SF	5-1/2" Thick, Kraft Faced, R-21 Fiberglass Flexible Insulation								$19,505.18
			Installation	Quantity 8,284.00	x	Unit Price 1.72	x	Factor 1.1320	=	Total 16,129.28		
			Demolition	8,284.00	x	0.36	x	1.1320	=	3,375.90		
				removal of existing insulation and installation of new 6684 sqft of walls 1564 sqft of ceilings								
78	07 26 13 00 0010		CSF	Building Wrap (Tyvek)								$5,304.13
			Installation	Quantity 87.50	x	Unit Price 53.55	x	Factor 1.1320	=	Total 5,304.13		
				for new addition								
79	07 31 13 13 0004		SQ	230 LB/SQ, 5" Exposure, Three Tab Fiberglass Reinforced, Asphalt Composition Shingle (CertainTeed XT 30)								$7,409.79
			Installation	Quantity 25.00	x	Unit Price 261.83	x	Factor 1.1320	=	Total 7,409.79		
				new shingle roof for addition								

Contractor's Price Proposal - Detail Continues..

Work Order Number: 116755.00
Work Order Title: Fashion Park Unit 234 Conversion

Section - 07

80	07 34 00 00 0003		SQ	30 LB, Asphalt Saturated Organic Felt Roofing Underlayment, Mechanically Fastened								$1,416.70
			Installation	Quantity 25.00	x	Unit Price 50.06	x	Factor 1.1320	=	Total 1,416.70		
			new shingle roof for addition									
81	07 41 13 00 0026		LF	Eave Flashing For Aluminum Exposed Fastener Metal Roofing								$784.25
			Installation	Quantity 40.00	x	Unit Price 17.32	x	Factor 1.1320	=	Total 784.25		
			for new addition									
82	07 41 13 00 0026	0130		For Fluoropolymer (Kynar®) Coating, Add								$42.11
			Installation	Quantity 40.00	x	Unit Price 0.93	x	Factor 1.1320	=	Total 42.11		
83	07 62 13 00 0033		SF	22 Gauge, 0.034" Thick, Galvanized Steel Flashing								$4,149.91
			Installation	Quantity 300.00	x	Unit Price 12.22	x	Factor 1.1320	=	Total 4,149.91		
			flashing per plans for addition and 100 sqft for new windows									
84	07 62 13 00 0033	0080		For Wrap Around Window Panning, Add								$699.58
			Installation	Quantity 100.00	x	Unit Price 6.18	x	Factor 1.1320	=	Total 699.58		
85	07 71 23 00 0016		LF	6", 0.032" Thick, Box Style Aluminum Gutter								$429.88
			Installation	Quantity 25.00	x	Unit Price 15.19	x	Factor 1.1320	=	Total 429.88		
			rain gutter per plans									
86	07 71 23 00 0016	0322		For Up To 100', Add								$70.18
			Installation	Quantity 25.00	x	Unit Price 2.48	x	Factor 1.1320	=	Total 70.18		
87	07 71 23 00 0029		EA	6", Box Style Aluminum Gutter End Cap								$18.34
			Installation	Quantity 2.00	x	Unit Price 8.10	x	Factor 1.1320	=	Total 18.34		
			rain gutter per plans									
88	07 71 23 00 0055		LF	4" x 5", 0.019" Thick, Rectangular Aluminum Downspout								$102.67
			Installation	Quantity 10.00	x	Unit Price 9.07	x	Factor 1.1320	=	Total 102.67		
			rain gutter per plans									
89	07 71 23 00 0055	0325		For Up To 100', Add								$14.04
			Installation	Quantity 10.00	x	Unit Price 1.24	x	Factor 1.1320	=	Total 14.04		

Subtotal for Section - 07 **$39,946.76**

Section - 08

90	08 05 13 00 0041		EA	Factory Prepare Wood Door (Rated Or Non-Rated) For Mortise Lockset Hardware								$470.41
			Installation	Quantity 6.00	x	Unit Price 69.26	x	Factor 1.1320	=	Total 470.41		
			for all new doors. 1 front door, 2 bath, and 3 bedroom									

Contractor's Price Proposal - Detail Continues..

Work Order Number: 116755.00
Work Order Title: Fashion Park Unit 234 Conversion

Section - 08

91	08 14 16 00 0134	EA	3'-0" x 6'-8" x 1-3/4" Thick, 5 Ply, Hollow Core (HC), Birch Faced Wood Door									$2,910.85
				Quantity		Unit Price		Factor		Total		
			Installation	7.00	x	288.16	x	1.1320	=	2,283.38		
			Demolition	10.00	x	55.43	x	1.1320	=	627.47		
			Demo of 3 utility closet, 5 bedroom, and 2 bathroom doors. Installation of 2 utility closet, 3 bedroom, 2 bathroom doors.									
92	08 14 73 00 0074	EA	5' Wide, Two 2'-6" x 6'-8" x 1-3/8" Thick, Flush, Hollow Core (HC), Birch Faced Wood Bi-Pass Doors									$1,525.71
				Quantity		Unit Price		Factor		Total		
			Installation	3.00	x	396.94	x	1.1320	=	1,348.01		
			Demolition	2.00	x	78.49	x	1.1320	=	177.70		
			removal of 2 existing closet sliding doors, installation of 3 new closet sliding doors									
93	08 53 13 00 0549	EA	>110" To 120" UI, Horizontal Sliding Premium Vinyl Window (Pella 350)									$4,060.21
				Quantity		Unit Price		Factor		Total		
			Installation	5.00	x	631.42	x	1.1320	=	3,573.84		
			Demolition	6.00	x	71.61	x	1.1320	=	486.38		
			removal of 6 existing windows. Installation of 5 new windows per plans									
94	08 71 11 00 0004	PR	3-1/2" x 3-1/2" Standard Duty, Full Mortise, Plain Bearing, Brass/Bronze, Satin Chrome Finish Hinge									$652.61
				Quantity		Unit Price		Factor		Total		
			Installation	7.00	x	73.13	x	1.1320	=	579.48		
			Demolition	10.00	x	6.46	x	1.1320	=	73.13		
			Demo of 3 utility closet, 5 bedroom, and 2 bathroom doors. Installation of 2 utility closet, 3 bedroom, 2 bathroom doors.									
95	08 71 11 00 0005	PR	4" x 4" Standard Duty, Full Mortise, Plain Bearing, Brass/Bronze, Satin Chrome Finish Hinge									$136.35
				Quantity		Unit Price		Factor		Total		
			Installation	1.50	x	80.30	x	1.1320	=	136.35		
			for new front door per plans									
96	08 71 11 00 0513	EA	3" Projection, Residential Spring Type, Bright Brass Finish, Steel Wall Stop (Ives 63)									$130.43
				Quantity		Unit Price		Factor		Total		
			Installation	7.00	x	9.86	x	1.1320	=	78.13		
			Demolition	10.00	x	4.62	x	1.1320	=	52.30		
			per plans									
97	08 71 11 00 0655	EA	190 Degree Angle Of View, Bright Brass Finish, Brass One-Way Wide Angle Door Viewer (Ives U698)									$47.59
				Quantity		Unit Price		Factor		Total		
			Installation	1.00	x	42.04	x	1.1320	=	47.59		
			for new front door per plans									
98	08 71 11 00 2288	EA	Passage/Closet F01 Mortise LatchsetBoth sides always unlocked.									$1,471.62
				Quantity		Unit Price		Factor		Total		
			Installation	2.00	x	615.36	x	1.1320	=	1,393.18		
			Demolition	3.00	x	23.10	x	1.1320	=	78.45		
			Demo of 3 utility closet. Installation of 2 utility closet doors									
99	08 71 11 00 2289	EA	Bath/Bedroom Privacy F02/F19 Mortise LocksetLocked with thumb knob inside.									$4,323.67
				Quantity		Unit Price		Factor		Total		
			Installation	5.00	x	731.56	x	1.1320	=	4,140.63		
			Demolition	7.00	x	23.10	x	1.1320	=	183.04		
			Demo of 5 bedroom, and 2 bathroom doors. Installation of 3 bedroom, 2 bathroom doors.									

Contractor's Price Proposal - Detail Continues..

Work Order Number: 116755.00
Work Order Title: Fashion Park Unit 234 Conversion

Section - 08

100	08 71 11 00 2293		EA	Entrance F08 Mortise LocksetLocked with key outside and thumb knob inside.								$960.13
					Quantity		Unit Price		Factor		Total	
				Installation	1.00	x	848.17	x	1.1320	=	960.13	
				for new front door per plans								
101	08 71 11 00 2293	0263		For Satin Brass Clear Coat US4 (BHMA 606) Finish, Add								$42.78
					Quantity		Unit Price		Factor		Total	
				Installation	1.00	x	37.79	x	1.1320	=	42.78	
102	08 72 33 00 0155		LF	3/8" x 3/16", Silicon Compression Bulb, Adhesive Backed Perimeter Gasketing Weather-Strip (Pemko PK33)								$63.89
					Quantity		Unit Price		Factor		Total	
				Installation	17.00	x	3.32	x	1.1320	=	63.89	
				for new front door per plans								
103	08 72 43 00 0011		LF	6" Width, 1/4" Height, Aluminum Saddle Threshold (Pemko 272A)								$125.07
					Quantity		Unit Price		Factor		Total	
				Installation	3.00	x	36.83	x	1.1320	=	125.07	
				for new front door per plans								
104	08 72 43 00 0011	0458		For Color Anodized Finish, Add								$16.33
					Quantity		Unit Price		Factor		Total	
				Installation	3.00	x	4.81	x	1.1320	=	16.33	

Subtotal for Section - 08 **$16,937.65**

Section - 09

105	09 05 71 00 0002		SF	5 Mil Tile And Stone Acoustical Underlayment (EasyMat)								$6,391.32
					Quantity		Unit Price		Factor		Total	
				Installation	1,564.00	x	3.61	x	1.1320	=	6,391.32	
				acousthmat underlayment per plans FSI/A-602								
106	09 05 71 00 0005		SF	2 MM Thick Resilient Plank Floor Acoustical Underlayment (Floormuffler)								$2,637.97
					Quantity		Unit Price		Factor		Total	
				Installation	1,564.00	x	1.49	x	1.1320	=	2,637.97	
				closest LI to gypsum sanded floor underlayment per plans FSI/A-602								
107	09 22 13 23 0008		SF	25 Gauge, 16" On Center, Installed On Walls, Double-Leg Resilient Channel, RC2 Furring Channel								$2,604.73
					Quantity		Unit Price		Factor		Total	
				Installation	650.00	x	3.54	x	1.1320	=	2,604.73	
				Resilient channel per plans A-602								
108	09 22 13 23 0010		SF	25 Gauge, 16" On Center, Installed On Ceilings, Double-Leg Resilient Channel, RC2 Furring Channel								$7,418.18
					Quantity		Unit Price		Factor		Total	
				Installation	1,564.00	x	4.19	x	1.1320	=	7,418.18	
				Resilient channel per plans FSI/A-602								
109	09 22 36 23 0005		SF	3.4 LB/SY, Installed On Studs Or Furred Walls, Flat Diamond, Expanded Metal Lath								$3,022.16
					Quantity		Unit Price		Factor		Total	
				Installation	875.00	x	2.53	x	1.1320	=	2,505.97	
				Demolition	800.00	x	0.57	x	1.1320	=	516.19	
				removal of existing stucco and installation of new for new addition and new front entrance								

Contractor's Price Proposal - Detail Continues..

Work Order Number: 116755.00
Work Order Title: Fashion Park Unit 234 Conversion

Section - 09

110	09 24 23 00 0002		SF	Scratch/Brown/Finish, Three Coat Troweled StuccoExcludes lath and felt. Interior or exterior, one side.								$10,885.03
					Quantity		Unit Price		Factor		Total	
				Installation	875.00	x	8.53	x	1.1320	=	8,448.97	
				Demolition	800.00	x	2.69	x	1.1320	=	2,436.06	
				removal of existing stucco and installation of new for new addition and new front entrance								
111	09 24 23 00 0004		SF	Scratch/Finish, Two Coat Troweled StuccoExcludes lath and felt. Interior or exterior, one side.								$6,763.70
					Quantity		Unit Price		Factor		Total	
				Installation	875.00	x	5.64	x	1.1320	=	5,586.42	
				Demolition	800.00	x	1.30	x	1.1320	=	1,177.28	
				removal of existing stucco and installation of new for new addition and new front entrance								
112	09 24 23 00 0005		SF	Finish Coat Troweled StuccoExcludes lath and felt. Interior or exterior, one side.								$4,373.48
					Quantity		Unit Price		Factor		Total	
				Installation	875.00	x	3.62	x	1.1320	=	3,585.61	
				Demolition	800.00	x	0.87	x	1.1320	=	787.87	
				removal of existing stucco and installation of new for new addition and new front entrance								
113	09 29 10 00 0006		SF	5/8" Gypsum Board								$14,191.84
					Quantity		Unit Price		Factor		Total	
				Installation	8,248.00	x	1.52	x	1.1320	=	14,191.84	
				for walls and ceilings per plans								
114	09 29 10 00 0038		SF	Up To 10' High, Walls, Tape, Spackle And Finish Gypsum Board								$4,464.11
					Quantity		Unit Price		Factor		Total	
				Installation	6,684.00	x	0.59	x	1.1320	=	4,464.11	
				for walls								
115	09 29 10 00 0038	0048		For ASTM C840 Level 5 High Quality Finish, Add								$3,329.17
					Quantity		Unit Price		Factor		Total	
				Installation	6,684.00	x	0.44	x	1.1320	=	3,329.17	
116	09 29 10 00 0041		SF	Up To 10' High, Ceilings, Tape, Spackle And Finish Gypsum Board								$1,363.25
					Quantity		Unit Price		Factor		Total	
				Installation	1,564.00	x	0.77	x	1.1320	=	1,363.24	
				for ceilings								
117	09 29 10 00 0041	0048		For ASTM C840 Level 5 High Quality Finish, Add								$10,091.55
					Quantity		Unit Price		Factor		Total	
				Installation	15,640.00	x	0.57	x	1.1320	=	10,091.55	
118	09 29 10 00 0044		LF	Up To 10' High, Vertical Corners, Tape, Spackle And Finish Gypsum Board								$1,651.00
					Quantity		Unit Price		Factor		Total	
				Installation	1,236.00	x	1.18	x	1.1320	=	1,651.00	
				walls: 150 vertical corners @ 8' throughout both floors. windows: 36 LF of vertical corners								
119	09 29 10 00 0044	0048		For ASTM C840 Level 5 High Quality Finish, Add								$1,217.26
					Quantity		Unit Price		Factor		Total	
				Installation	1,236.00	x	0.87	x	1.1320	=	1,217.26	
120	09 29 10 00 0047		LF	Up To 10' High, Horizontal Corners, Tape, Spackle And Finish Gypsum Board								$1,209.66
					Quantity		Unit Price		Factor		Total	
				Installation	780.00	x	1.37	x	1.1320	=	1,209.66	
				750 LF of walls and 30 LF of windows								

Work Order Number: 116755.00
Work Order Title: Fashion Park Unit 234 Conversion

Section - 09

121	09 29 10 00 0047	0048		For ASTM C840 Level 5 High Quality Finish, Add								$891.79
			Installation	Quantity 780.00	x	Unit Price 1.01	x	Factor 1.1320	=	Total 891.79		
122	09 29 10 00 0051		LF	Corner Bead, Galvanized Steel For Gypsum Board								$7,508.15
			Installation	Quantity 2,016.00	x	Unit Price 3.29	x	Factor 1.1320	=	Total 7,508.15		
			walls: 150 vertical corners @ 8' throughout both floors. 750 LF of horizontal corners Windows: 86 LF									
123	09 65 13 13 0003		LF	4" High, 1/8" Thick, Type TV Thermoplastic Vinyl Wall Base, All Colors								$2,844.15
			Installation	Quantity 750.00	x	Unit Price 3.35	x	Factor 1.1320	=	Total 2,844.15		
			750 LF of walls									
124	09 65 23 00 0004		SF	0.16" Overall Thickness, 0.020" Wear Layer, Vinyl Plank Flooring (Armstrong® Luxe Plank™)								$16,907.78
			Installation	Quantity 1,564.00	x	Unit Price 9.55	x	Factor 1.1320	=	Total 16,907.78		
			new flooring throughout per plans									
125	09 91 13 00 0095		SF	1 Coat Primer, Brush/Roller Work, Paint Exterior Stucco Walls								$1,236.14
			Installation	Quantity 1,400.00	x	Unit Price 0.78	x	Factor 1.1320	=	Total 1,236.14		
			paint front and side of building for affected areas corner to corner									
126	09 91 13 00 0097		SF	2 Coats Paint, Brush/Roller Work, Paint Exterior Stucco Walls								$2,599.07
			Installation	Quantity 1,400.00	x	Unit Price 1.64	x	Factor 1.1320	=	Total 2,599.07		
			paint front and side of building for affected areas corner to corner									
127	09 91 23 00 0067		SF	1 Coat Primer, Brush/Roller Work, Paint Interior Plaster/Drywall Walls								$4,161.46
			Installation	Quantity 6,684.00	x	Unit Price 0.55	x	Factor 1.1320	=	Total 4,161.46		
			for walls									
128	09 91 23 00 0069		SF	2 Coats Paint, Brush/Roller Work, Paint Interior Plaster/Drywall Walls								$8,322.92
			Installation	Quantity 6,684.00	x	Unit Price 1.10	x	Factor 1.1320	=	Total 8,322.92		
			for walls									
129	09 91 23 00 0161		SF	1 Coat Primer, Brush/Roller Work, Paint Interior Drywall/Plaster Ceiling								$1,150.79
			Installation	Quantity 1,564.00	x	Unit Price 0.65	x	Factor 1.1320	=	Total 1,150.79		
			for ceilings									
130	09 91 23 00 0163		SF	2 Coats Paints, Brush/Roller Work, Paint Interior Drywall/Plaster Ceiling								$2,071.42
			Installation	Quantity 1,564.00	x	Unit Price 1.17	x	Factor 1.1320	=	Total 2,071.42		
			for ceilings									
131	09 91 23 00 0252		LF	1 Coat Primer, Brush/Roller Work, Paint Interior Wood Door Frame And Trim								$570.53
			Installation	Quantity 600.00	x	Unit Price 0.84	x	Factor 1.1320	=	Total 570.53		
			15 total doors. 40 LF of trim per door									
132	09 91 23 00 0254		LF	2 Coats Paint, Brush/Roller Work, Paint Interior Wood Door Frame And Trime								$1,249.73
			Installation	Quantity 600.00	x	Unit Price 1.84	x	Factor 1.1320	=	Total 1,249.73		
			15 total doors. 40 LF of trim per door									

Contractor's Price Proposal - Detail Continues..

Work Order Number: 116755.00
Work Order Title: Fashion Park Unit 234 Conversion

Section - 09

133	09 91 23 00 0275	EA	1 Coat Primer, Brush/Roller Work, Both Faces, Paint Interior Wood Door								$1,153.96
				Quantity		Unit Price		Factor		Total	
			Installation	15.00	x	67.96	x	1.1320	=	1,153.96	
			8 doors on first floor 7 doors on second floor								
134	09 91 23 00 0277	EA	2 Coats Paint, Brush/Roller Work, Both Faces, Paint Interior Wood Door								$2,072.58
				Quantity		Unit Price		Factor		Total	
			Installation	15.00	x	122.06	x	1.1320	=	2,072.58	
			8 doors on first floor 7 doors on second floor								
135	09 91 23 00 0307	LF	1 Coat Primer, Brush/Roller Work, Paint Interior Wood Window Frame And Trim								$163.73
				Quantity		Unit Price		Factor		Total	
			Installation	128.00	x	1.13	x	1.1320	=	163.73	
			8 windows with 128 LF of trim								
136	09 91 23 00 0309	LF	2 Coats Paint, Brush/Roller Work, Paint Interior Wood Window Frame And Trim								$357.89
				Quantity		Unit Price		Factor		Total	
			Installation	128.00	x	2.47	x	1.1320	=	357.89	
			8 windows with 128 LF of trim								
137	09 91 23 00 0350	LF	1 Coat Primer, Brush Work, Paint Interior Wood Trim To 6" Wide								$492.42
				Quantity		Unit Price		Factor		Total	
			Installation	750.00	x	0.58	x	1.1320	=	492.42	
			750 LF of baseboards								
138	09 91 23 00 0352	LF	2 Coats Paint, Paint Interior Wood Trim to 6" Wide								$1,120.68
				Quantity		Unit Price		Factor		Total	
			Installation	750.00	x	1.32	x	1.1320	=	1,120.68	
			750 LF of baseboards								

Subtotal for Section - 09 **$136,489.60**

Section - 10

139	10 28 13 13 0045	EA	Single Roll, Surface Mounted, Stainless Steel, Satin Finish, Toilet Tissue Dispenser (Bobrick B-6857)								$123.83
				Quantity		Unit Price		Factor		Total	
			Installation	1.00	x	88.61	x	1.1320	=	100.31	
			Demolition	1.00	x	20.78	x	1.1320	=	23.52	
			per plans								
140	10 28 13 13 0170	EA	36" Length, 1-1/2" Diameter, Stainless Steel Grab Bar (Bobrick B-6806x36)								$311.68
				Quantity		Unit Price		Factor		Total	
			Installation	3.00	x	91.78	x	1.1320	=	311.68	
			per plans								
141	10 28 13 13 0171	EA	42" Length, 1-1/2" Diameter, Stainless Steel Grab Bar (Bobrick B-6806x42)								$106.14
				Quantity		Unit Price		Factor		Total	
			Installation	1.00	x	93.76	x	1.1320	=	106.14	
			per plans								
142	10 28 13 13 0217	EA	Telescoping 60" To 72" Length, 20-Gauge, 1" Diameter, Stainless Steel Curved Shower Rod With Concealed Mounting (Kohler Expanse K-9349)								$158.19
				Quantity		Unit Price		Factor		Total	
			Installation	1.00	x	118.96	x	1.1320	=	134.66	
			Demolition	1.00	x	20.78	x	1.1320	=	23.52	
			per plans								

Contractor's Price Proposal - Detail Continues..

Work Order Number: 116755.00
Work Order Title: Fashion Park Unit 234 Conversion

Section - 10

143	10 28 13 13 0322	EA	24" Length, 3/4" Diameter, Stainless Steel Towel Bar (Bobrick B-674)									$133.36
				Quantity		Unit Price		Factor		Total		
			Installation	1.00	x	97.03	x	1.1320	=	109.84		
			Demolition	1.00	x	20.78	x	1.1320	=	23.52		
			per plans									
144	10 28 13 13 0390	EA	20" x 26", Surface Mounted, Aluminum Medicine Cabinet (Kohler K-CB)									$817.76
				Quantity		Unit Price		Factor		Total		
			Installation	1.00	x	676.23	x	1.1320	=	765.49		
			Demolition	1.00	x	46.17	x	1.1320	=	52.26		
			per plans									

Subtotal for Section - 10 **$1,650.96**

Section - 11

145	11 30 13 13 0010	EA	30" Gas Range With Oven									$2,325.17
				Quantity		Unit Price		Factor		Total		
			Installation	2.00	x	985.73	x	1.1320	=	2,231.69		
			Demolition	1.00	x	82.58	x	1.1320	=	93.48		
			remove and save existing for clients attic stock. Installation of 2 new.									
146	11 30 13 13 0015	EA	30" Venting Range Hood (Broan 40000)									$619.32
				Quantity		Unit Price		Factor		Total		
			Installation	2.00	x	242.58	x	1.1320	=	549.20		
			Demolition	1.00	x	61.94	x	1.1320	=	70.12		
			removal of existing and installation of 2 new									
147	11 30 13 13 0048	EA	>16 To 18 CF Top Freezer Refrigerator									$2,550.65
				Quantity		Unit Price		Factor		Total		
			Installation	2.00	x	1,105.96	x	1.1320	=	2,503.89		
			Demolition	1.00	x	41.30	x	1.1320	=	46.75		
			remove and save existing for clients attic stock. Installation of 2 new.									
148	11 30 13 13 0084	EA	1/3 HP Insulated Garbage Disposal (GE GFC320V)									$636.07
				Quantity		Unit Price		Factor		Total		
			Installation	2.00	x	249.98	x	1.1320	=	565.95		
			Demolition	1.00	x	61.94	x	1.1320	=	70.12		
			removal o existing and installation of new									

Subtotal for Section - 11 **$6,131.21**

Section - 12

149	12 36 61 19 0005	SF	1-1/4" Thick, Quartz Agglomerate Countertop With Backsplash									$6,914.26
				Quantity		Unit Price		Factor		Total		
			Installation	50.00	x	122.16	x	1.1320	=	6,914.26		
			25 LF of kitchen countertops									
150	12 36 61 19 0007	EA	Cutout For Sink And/Or Faucet In Quartz Agglomerate Countertop									$313.61
				Quantity		Unit Price		Factor		Total		
			Installation	2.00	x	138.52	x	1.1320	=	313.61		
			2 kitchen sinks									

Subtotal for Section - 12 **$7,227.87**

Section - 22

Work Order Number: 116755.00
Work Order Title: Fashion Park Unit 234 Conversion

Section - 22

151	22 01 40 81 0004	EA	Removal And Replacement Of Chrome Supply Lines To Sink/Lavatory, Pair								$297.60
				Quantity		Unit Price		Factor		Total	
			Installation	10.00	x	26.29	x	1.1320	=	297.60	
			replace supply lines in kitchens and bathrooms								
152	22 01 40 81 0006	EA	Removal And Replacement Of Double Bowl Sink/Lavatory Drain Line								$128.73
				Quantity		Unit Price		Factor		Total	
			Installation	2.00	x	56.86	x	1.1320	=	128.73	
			new drain lines								
153	22 11 16 00 0003	LF	3/4" Schedule 40 Threaded Galvanized Steel Pipe With 150 LB Malleable Iron Fitting AssemblyIncludes all hangers and all galvanized malleable iron fittings (couplings, elbows, tees and reducer fittings). All hangers are complete assemblies. Not for use where detail is available.								$7,127.07
				Quantity		Unit Price		Factor		Total	
			Installation	300.00	x	18.30	x	1.1320	=	6,214.68	
			Demolition	200.00	x	4.03	x	1.1320	=	912.39	
			gas line piping								
154	22 11 16 00 0901	LF	3/4" Inside Diameter Copper Pipe/Tubing Type L AssemblyIncludes all hangers and couplings, elbow, tee, reducer fittings. All hangers are complete assemblies. Not for use where detail is available.								$19,234.38
				Quantity		Unit Price		Factor		Total	
			Installation	650.00	x	24.17	x	1.1320	=	17,784.29	
			Demolition	350.00	x	3.66	x	1.1320	=	1,450.09	
			water line copper piping								
155	22 12 23 13 0002	EA	80 Gallon ASME Rated Tank, 150PSI, Jacketed, Insulated, Glass Lined Water Heater Storage Tank (TJ-80A)								$424.28
				Quantity		Unit Price		Factor		Total	
			Installation	0.00	x	2,141.02	x	1.1320	=	0.00	
			Demolition	1.00	x	374.81	x	1.1320	=	424.28	
			removal of existing water heater								
156	22 13 16 00 0509	LF	4" Schedule 40 Polyvinyl Chloride (PVC) DWV Pipe AssemblyIncludes all fittings, couplings and hangers. Fittings are assumed every 10'. Not for use where detail is available.								$20,147.62
				Quantity		Unit Price		Factor		Total	
			Installation	400.00	x	39.47	x	1.1320	=	17,872.02	
			Demolition	275.00	x	7.31	x	1.1320	=	2,275.60	
			Sewer and vent piping								
157	22 34 13 00 0011	EA	7.4 GPM, Outdoor Mount, Instantaneous, Tankless, Gas Domestic Water Heater (Rheem RTG-74XN)								$5,196.24
				Quantity		Unit Price		Factor		Total	
			Installation	2.00	x	2,295.16	x	1.1320	=	5,196.24	
			installation of 2 new water heaters								
158	22 41 16 16 0003	EA	33" x 21" x 6-1/2" Stainless Steel Kitchen Sink, Double Bowl, 20 Gauge (Elkay D233213)								$1,488.27
				Quantity		Unit Price		Factor		Total	
			Installation	2.00	x	607.23	x	1.1320	=	1,374.77	
			Demolition	1.00	x	100.27	x	1.1320	=	113.51	
			removal of existing and installation of new.								
159	22 41 39 00 0006	EA	Chrome Two Handle Kitchen Faucet With Spray, Three Hole Installation, 8" Center (Delta 2402LF-LHP+H215)								$454.33
				Quantity		Unit Price		Factor		Total	
			Installation	2.00	x	177.25	x	1.1320	=	401.29	
			Demolition	1.00	x	46.85	x	1.1320	=	53.03	
			removal of existing and installation of new.								

Contractor's Price Proposal - Detail Continues..

Work Order Number: 116755.00
Work Order Title: Fashion Park Unit 234 Conversion

Section - 22

160	22 42 13 13 0027	EA	2 Piece Tank Type, Pressure Assisted, Siphon Jet, Floor Mounted, Back Outlet, Handicap Accessible, Elongated Vitreous China Water Closet (American Standard Yorkville™ ADA)								$1,300.36
				Quantity		Unit Price		Factor		Total	
			Installation	1.00	x	1,051.28	x	1.1320	=	1,190.05	
			Demolition	1.00	x	97.45	x	1.1320	=	110.31	
			remove existing and install new ADA toilet								
161	22 42 16 13 0009	EA	27" x 20" Wheelchair Accessible, Vitreous China Wall Hung Lavatory (American Standard Wheel Chair Users)								$776.98
				Quantity		Unit Price		Factor		Total	
			Installation	1.00	x	623.60	x	1.1320	=	705.92	
			Demolition	1.00	x	62.78	x	1.1320	=	71.07	
			remove existing and install new ADA sink, faucet, and drain cover.								
162	22 42 19 00 0027	EA	3 Piece Tub/Shower Surrounds, 32" x 72" Side Walls, 48" x 72" Back, (Swanstone SK-324872)								$3,166.32
				Quantity		Unit Price		Factor		Total	
			Installation	1.00	x	2,797.10	x	1.1320	=	3,166.32	
			new tub/shower for ADA bathroom								
163	22 42 39 00 0042	EA	Single Supply EcoPower® Faucet, Polished Chrome Finish (Toto TEL3LS10#CP)								$709.36
				Quantity		Unit Price		Factor		Total	
			Installation	1.00	x	626.64	x	1.1320	=	709.36	
			ADA sink, faucet, and drain cover.								
164	22 42 39 00 0064	EA	Three Lever Handle, Chrome Shower And Tub Filler (American Standard Colony Soft 3375.502)								$293.63
				Quantity		Unit Price		Factor		Total	
			Installation	1.00	x	218.72	x	1.1320	=	247.59	
			Demolition	1.00	x	40.67	x	1.1320	=	46.04	
			per plans								
165	22 42 39 00 0210	EA	Lavatory Protective Enclosure (IPS Truebro Lav Shield)								$350.49
				Quantity		Unit Price		Factor		Total	
			Installation	2.00	x	154.81	x	1.1320	=	350.49	
			drain cover for ADA kitchen and bathroom sink								
166	22 42 39 00 0217	EA	1/2" NPT x 3/8" Compression Chrome, Quarter Turn Dual Angle Stop (SharkBite 25558)								$555.72
				Quantity		Unit Price		Factor		Total	
			Installation	10.00	x	41.22	x	1.1320	=	466.61	
			Demolition	8.00	x	9.84	x	1.1320	=	89.11	
			new angle stops installed in bathrooms and kitchens								

Subtotal for Section - 22 **$61,651.38**

Section - 23

167	23 05 93 00 0017	EA	Balancing HVAC Duct System, Floor Height Supply, Return, Exhaust, Register And Diffuser								$61.88
				Quantity		Unit Price		Factor		Total	
			Installation	1.00	x	54.66	x	1.1320	=	61.88	
			required setup, balancing, and charging for new system								
168	23 09 23 53 0284	EA	Scheduling Program, HVAC (AHU, RTU, AC Units, Etcetera) Programming Measures								$3,880.60
				Quantity		Unit Price		Factor		Total	
			Installation	1.00	x	3,428.09	x	1.1320	=	3,880.60	
			required setup, balancing, and charging for new system								

Contractor's Price Proposal - Detail Continues..

Work Order Number: 116755.00
Work Order Title: Fashion Park Unit 234 Conversion

Section - 23

169	23 31 13 16 0063	EA	4" Diameter, 26 Gauge, 2" WG And Less (Class C), Galvanized Sheet Metal Round And Flat-Oval Connector									$240.41
				Quantity		Unit Price		Factor		Total		
			Installation	14.00	x	15.17	x	1.1320	=	240.41		
			exhaust ducting for dyer per plans									
170	23 33 13 13 0006	EA	12" Diameter Radial Opposed Blade Damper Round, Steel Construction, Manual Operated									$140.78
				Quantity		Unit Price		Factor		Total		
			Installation	1.00	x	113.45	x	1.1320	=	128.43		
			Demolition	1.00	x	10.91	x	1.1320	=	12.35		
			HVAC per plans									
171	23 33 46 00 0008	LF	12" Diameter Flexible Duct, R8.0 Insulated With Polyester Inner Liner And Metallized Outer Jacket									$2,231.74
				Quantity		Unit Price		Factor		Total		
			Installation	100.00	x	15.36	x	1.1320	=	1,738.75		
			Demolition	130.00	x	3.35	x	1.1320	=	492.99		
			HVAC per plans									
172	23 33 46 00 0020	EA	12" Diameter Flexible Duct Collar, Spin In Type, Sheet Metal, With Damper									$100.97
				Quantity		Unit Price		Factor		Total		
			Installation	1.00	x	76.62	x	1.1320	=	86.73		
			Demolition	1.00	x	12.58	x	1.1320	=	14.24		
			HVAC per plans									
173	23 34 16 00 0127	EA	30" Diameter Wheel, 2 HP, 10,192 CFM At 1/4" Static Pressure, Belt Drive, Kitchen Upblast Exhaust Fan115/208-230/60/3. Includes heat baffle, grease baffle and disconnect switch.									$9,622.60
				Quantity		Unit Price		Factor		Total		
			Installation	2.00	x	4,153.39	x	1.1320	=	9,403.27		
			Demolition	1.00	x	193.75	x	1.1320	=	219.33		
			removal of one existing and installation of 2 new									
174	23 34 16 00 0275	EA	109 CFM, Ceiling/Wall Mounted, Metal Intake Grille, Heavy Duty/Continuous Operation Exhaust Fan (Broan® LoSone® Ventilator L100MG)									$897.54
				Quantity		Unit Price		Factor		Total		
			Installation	2.00	x	379.30	x	1.1320	=	858.74		
			Demolition	1.00	x	34.28	x	1.1320	=	38.80		
			exhaust fan per plans EF-1									
175	23 37 13 13 0080	EA	20" x 20" Single Deflection Return/Exhaust Register, Aluminum, Opposed Blade Damper, Wall/Ceiling									$319.70
				Quantity		Unit Price		Factor		Total		
			Installation	1.00	x	265.64	x	1.1320	=	300.70		
			Demolition	1.00	x	16.78	x	1.1320	=	18.99		
			HVAC per plans									
176	23 37 13 13 0225	EA	18" x 8" 4-Way Adjustable Wall Supply Grille, Adjustable Deflection, Aluminum Construction									$2,395.67
				Quantity		Unit Price		Factor		Total		
			Installation	7.00	x	275.90	x	1.1320	=	2,186.23		
			Demolition	11.00	x	16.82	x	1.1320	=	209.44		
			HVAC per plans									
177	23 54 16 13 0007	EA	120 MBH, 2,000 CFM Up/Horizontal Flow Multi-Speed, Two Stage 96% AFUE Gas FurnaceBlower cooling capacity up to 5 tons.									$5,879.99
				Quantity		Unit Price		Factor		Total		
			Installation	2.00	x	2,597.17	x	1.1320	=	5,879.99		
			per plans. SH-1 and SH-2 wall mounted furnaces									

Work Order Number: 116755.00
Work Order Title: Fashion Park Unit 234 Conversion

Section - 23

178	23 81 49 00 0020	EA	7-1/2 Ton Indoor Section Split Heat Pump Packaged Unit, Horizontal Upflow With 10 KW Electric Heat									$4,932.97
				Quantity		Unit Price		Factor		Total		
			Installation	1.00	x	4,047.74	x	1.1320	=	4,582.04		
			Demolition	1.00	x	310.01	x	1.1320	=	350.93		
			new furnace per clients request									

Subtotal for Section - 23 **$30,704.85**

Section - 26

179	26 01 20 91 0002	EA	Lock Out/Tag Out Local DisconnectExcludes tag or padlock See CSI section 26 01 20 91-0004 for padlock, 26 01 20 91-0005 for tag(s).									$523.83
				Quantity		Unit Price		Factor		Total		
			Installation	15.00	x	30.85	x	1.1320	=	523.83		
			LOTO of existing circuits									
180	26 05 19 16 0402	MLF	#12 AWG, 3 Conductors, 600 Volt, Type NM, Copper, Non-Metallic Sheathed Cable									$12,214.42
				Quantity		Unit Price		Factor		Total		
			Installation	4.00	x	2,697.53	x	1.1320	=	12,214.42		
			for new electrical runs per plans									
181	26 05 19 16 0402	0377	For Installation In Wood Stud Wall (Includes Drilling), Add									$1,272.82
				Quantity		Unit Price		Factor		Total		
			Installation	4.00	x	281.10	x	1.1320	=	1,272.82		
182	26 09 23 00 0109	EA	Wall Switch Replacement Occupancy Sensor, Single GangIncludes integral occupancy sensor and relay.									$1,204.00
				Quantity		Unit Price		Factor		Total		
			Installation	10.00	x	106.36	x	1.1320	=	1,204.00		
			per plans									
183	26 09 23 00 0235	EA	Passive Infrared, Wall Switch Mounted, Wired Occupancy Sensor (Encelium PW-100-24)Excludes GB II cable.									$586.31
				Quantity		Unit Price		Factor		Total		
			Installation	2.00	x	258.97	x	1.1320	=	586.31		
			for bathrooms									
184	26 24 13 00 0213	EA	800 Amperes, 480 Volt, 4 Wire, Switchboard Incoming No Switch Circuit									$5,781.11
				Quantity		Unit Price		Factor		Total		
			Installation	1.00	x	4,332.49	x	1.1320	=	4,904.38		
			Demolition	1.00	x	774.50	x	1.1320	=	876.73		
			for new main panel to new units subpanels									
185	26 24 16 00 0470	EA	200 Ampere Rating, Main Breaker, Indoor, 42 Circuit, 4 Wire, 120/208 Volt, Assembled Panelboard With 20 Ampere, 1 Pole Plug-In Breakers									$7,931.90
				Quantity		Unit Price		Factor		Total		
			Installation	2.00	x	3,075.97	x	1.1320	=	6,964.00		
			Demolition	1.00	x	855.04	x	1.1320	=	967.91		
			1 new sub panel for each unit									
186	26 27 13 00 0125	EA	Single Phase M-90 Meter, Socket, NEMA 3R Enclosure									$6,442.28
				Quantity		Unit Price		Factor		Total		
			Installation	6.00	x	905.76	x	1.1320	=	6,151.92		
			Demolition	5.00	x	51.30	x	1.1320	=	290.36		
			installation of new meters for building									
187	26 27 26 00 0009	EA	20 Amperes, 1 Gang, GFI, Duplex Receptacle Assembly									$3,825.42
				Quantity		Unit Price		Factor		Total		
			Installation	30.00	x	96.40	x	1.1320	=	3,273.74		
			Demolition	15.00	x	32.49	x	1.1320	=	551.68		
			All new GFI outlets throughout per clients request									

Contractor's Price Proposal - Detail Continues..

Work Order Number: 116755.00
Work Order Title: Fashion Park Unit 234 Conversion

Section - 26

188	26 27 26 00 0125		EA	20 Amperes, 125 Volt Single Specification Grade Tamper Resistant ReceptaclePass & Seymour TR5351.									$1,944.32
					Quantity		Unit Price		Factor		Total		
				Installation	40.00	x	34.39	x	1.1320	=	1,557.18		
				Demolition	40.00	x	8.55	x	1.1320	=	387.14		
				all new outlets throughout per clients request									
189	26 27 26 00 0138		EA	1 Gang, 20 Amperes, 120/277 Volt, SPST, Switch Assembly									$3,327.23
					Quantity		Unit Price		Factor		Total		
				Installation	25.00	x	85.08	x	1.1320	=	2,407.76		
				Demolition	25.00	x	32.49	x	1.1320	=	919.47		
				25 switches total in both units									
190	26 51 19 00 0312		EA	8" Diameter, 1,200 Lumens, Recessed LED Downlight With Open Trim (Lithonia DOM8 LED)									$7,780.09
					Quantity		Unit Price		Factor		Total		
				Installation	19.00	x	324.11	x	1.1320	=	6,970.96		
				Demolition	19.00	x	37.62	x	1.1320	=	809.13		
				19 new slim LED lights per plans and owners request									
191	26 51 19 00 0312	0543	EA	For Dimming Driver And Sensor Switch nLight Dimming Relay, Add									$1,339.77
					Quantity		Unit Price		Factor		Total		
				Installation	17.00	x	69.62	x	1.1320	=	1,339.77		
192	26 51 19 00 0430		EA	5" Shallow, Insulated Ceiling, Air-Tite New Construction (Cooper Halo H25ICAT)									$314.84
					Quantity		Unit Price		Factor		Total		
				Installation	3.00	x	92.71	x	1.1320	=	314.84		
				3 new 5" slim LED lights per plans									
193	26 51 19 00 0470		EA	2-1/2" Diameter x 15-1/2" High, Polished Nickel, LED Wall Sconce (Hudson Valley Lighting SHAW 1200-PN)									$1,017.22
					Quantity		Unit Price		Factor		Total		
				Installation	2.00	x	415.10	x	1.1320	=	939.79		
				Demolition	2.00	x	34.20	x	1.1320	=	77.43		
				2 new wall sconces per plans in bathrooms									
194	26 56 19 00 0031		EA	9,503 Lumens, 77 Watt, 3 LEDs, Wall Mounted Security Fixture (Jarvis Corp WMFT-350)									$1,530.14
					Quantity		Unit Price		Factor		Total		
				Installation	3.00	x	388.10	x	1.1320	=	1,317.99		
				Demolition	3.00	x	62.47	x	1.1320	=	212.15		
				replace 3 existing exterior lights per clients request									

Subtotal for Section - 26 **$57,035.70**

Section - 31

195	31 05 16 00 0002		CY	#2 Stone Aggregate Fill (1-1/2" To 2-1/2" Clean)									$1,295.01
					Quantity		Unit Price		Factor		Total		
				Installation	25.00	x	45.76	x	1.1320	=	1,295.01		
				4" deep, 200 LF, 2' wide base for backfill for trenching. 20 CY for footings, and slabs									
196	31 05 16 00 0002	0053		For Up To 8, Add									$51.79
					Quantity		Unit Price		Factor		Total		
				Installation	5.00	x	9.15	x	1.1320	=	51.79		
197	31 11 00 00 0008		ACR	Clearing By Machine - Light Brush Without Grub									$174.72
					Quantity		Unit Price		Factor		Total		
				Installation	0.50	x	308.69	x	1.1320	=	174.72		
				clear out weeds in back yard									

Contractor's Price Proposal - Detail Continues..

Work Order Number: 116755.00
Work Order Title: Fashion Park Unit 234 Conversion

Section - 31

198	31 11 00 00 0017	CY	Hand Loading Of Cleared And Grubbed Material								$849.91
				Quantity		Unit Price		Factor		Total	
			Installation	20.00	x	37.54	x	1.1320	=	849.91	
			clear out weeds in back yard								
199	31 23 16 13 0007	CY	Excavation For Trenching By Hand In SoilIncludes stockpiling excess materials and trimming sides and bottom of trench.								$3,505.24
				Quantity		Unit Price		Factor		Total	
			Installation	25.00	x	123.86	x	1.1320	=	3,505.24	
			20" deep, 200 LF, 2' wide								
200	31 23 16 13 0011	CY	Backfilling or Placing Subbase for Trenches with Imported or Stockpiled Materials by Hand								$973.80
				Quantity		Unit Price		Factor		Total	
			Installation	25.00	x	34.41	x	1.1320	=	973.80	
			20" deep, 200 LF, 2' wide								
201	31 23 16 13 0014	CY	Compaction of Fill or Subbase for Trenches by Hand								$1,098.61
				Quantity		Unit Price		Factor		Total	
			Installation	25.00	x	38.82	x	1.1320	=	1,098.61	
			20" deep, 200 LF, 2' wide								
202	31 23 16 36 0009	CY	Excavation For Building Foundations And Other Structures By Hand in Soil								$6,309.43
				Quantity		Unit Price		Factor		Total	
			Installation	45.00	x	123.86	x	1.1320	=	6,309.43	
			for footings and slab								
203	31 23 16 36 0019	CY	Backfilling Around Building Foundations And Other Structures By Hand								$1,335.53
				Quantity		Unit Price		Factor		Total	
			Installation	20.00	x	58.99	x	1.1320	=	1,335.53	
			for footings and slab								
204	31 23 16 36 0022	CY	Compaction Of Fill Or Subbase For Building Foundations and Other Structures by Hand								$1,976.98
				Quantity		Unit Price		Factor		Total	
			Installation	45.00	x	38.81	x	1.1320	=	1,976.98	
			for footings and slab								

Subtotal for Section - 31 **$17,571.02**

Section - 32

205	32 16 13 13 0016	LF	6" x 12" Cast In Place Concrete Gutter With 6" Curb And Face - Straight								$609.07
				Quantity		Unit Price		Factor		Total	
			Installation	15.00	x	24.92	x	1.1320	=	423.14	
			Demolition	15.00	x	10.95	x	1.1320	=	185.93	
			for parking lot ADA modifications								
206	32 16 23 00 0002	SF	4" Cast In Place Concrete Sidewalk								$586.15
				Quantity		Unit Price		Factor		Total	
			Installation	60.00	x	8.63	x	1.1320	=	586.15	
			for parking lot ADA modifications								
207	32 16 23 00 0002 0094		For Up To 100, Add								$248.59
				Quantity		Unit Price		Factor		Total	
			Installation	60.00	x	3.66	x	1.1320	=	248.59	
208	32 16 23 00 0008	EA	Finish Concrete Handicap Drop Section In SidewalkExcludes patterned (tactile) finish.								$145.65
				Quantity		Unit Price		Factor		Total	
			Installation	1.00	x	128.67	x	1.1320	=	145.65	
			for parking lot ADA modifications								

Contractor's Price Proposal - Detail Continues..

Work Order Number: 116755.00
Work Order Title: Fashion Park Unit 234 Conversion

Section - 32

209	32 17 23 13 0074	SF	Solid Area, Painted Pavement Marking For Parking AreasUse task for lines >12" wide, stop bars, transverse lines, diagonal lines, crossing lanes, etc.									$281.82
				Quantity		Unit Price		Factor		Total		
			Installation	64.00	x	3.89	x	1.1320	=	281.82		
			for parking lot ADA modifications									
210	32 17 23 13 0088	EA	Handicap Symbol For Van Parking Stalls, Painted Pavement Marking For Parking AreasApproximate overall dimensions: 4-1/3' width x 5' height. White or blue symbol. Excludes striping.									$86.15
				Quantity		Unit Price		Factor		Total		
			Installation	2.00	x	38.05	x	1.1320	=	86.15		
			for parking lot ADA modifications									
211	32 17 26 00 0003	SF	Embedded, VPC Truncated Dome Detectable Warning SurfaceAlso raised strips or directional bars. All colors.									$832.25
				Quantity		Unit Price		Factor		Total		
			Installation	16.00	x	45.95	x	1.1320	=	832.25		
			new truncated domes per A-501									
212	32 31 23 00 0006	LF	6' High Privacy Tongue And Groove Vinyl Fence									$3,593.82
				Quantity		Unit Price		Factor		Total		
			Installation	45.00	x	63.16	x	1.1320	=	3,217.37		
			Demolition	45.00	x	7.39	x	1.1320	=	376.45		
			removal of existing vinyl fence and installation of new due to ADA width requirements . includes a 4' wide ADA gate									
213	32 31 23 00 0051	EA	6' High x 4' Wide Vinyl Gate For Privacy Or Semi-Privacy Fence And Hinge Set									$757.38
				Quantity		Unit Price		Factor		Total		
			Installation	1.00	x	611.32	x	1.1320	=	692.01		
			Demolition	1.00	x	57.74	x	1.1320	=	65.36		
			removal of existing vinyl fence and installation of new due to ADA width requirements . includes a 4' wide ADA gate									
214	32 31 23 00 0078	EA	Stainless Steel Latch Set									$124.46
				Quantity		Unit Price		Factor		Total		
			Installation	1.00	x	109.95	x	1.1320	=	124.46		
			removal of existing vinyl fence and installation of new due to ADA width requirements . includes a 4' wide ADA gate									

Subtotal for Section - 32 **$7,265.34**

Proposal Total **$610,749.96**

This total represents the correct total for the proposal. Any discrepancy between line totals, sub-totals and the proposal total is due to rounding.

The Percentage of NPP on this Proposal: **%**

GORDIAN®

Subcontractor Listing

Date: June 06, 2023

Re:

IQC Master Contract #:	CA-R7-GB06-123021-MDJ
Work Order #:	116755.00
Owner PO #:	
Title:	Fashion Park Unit 234 Conversion
Contractor:	MDJ Management
Proposal Value:	$610,749.96

Name of Contractor	Duties	Amount	%
Janus Corporation		$100,000.00	16.37
Refined Construction		$450,000.00	73.68

EXHIBIT A

GORDIAN®

Work Order Signature Document

EZIQC Contract No.: CA-R7-GB06-123021-MDJ

[X] **New Work Order** [ ] **Modify an Existing Work Order**

Work Order Number.:	116757.00	Work Order Date:	06/06/2023
Work Order Title:	Fashion Park Unit 251 Conversion		
Owner Name:	Oxnard Housing Authority	Contractor Name:	MDJ Management
Contact:	Fredi Contreras	Contact:	Matt McMillon
Phone:	805-890-8319	Phone:	310-490-1521

Work to be Performed

Work to be performed as per the Final Detailed Scope of Work Attached and as per the terms and conditions of Sourcewell EZIQC Contract No CA-R7-GB06-123021-MDJ.

Brief Work Order Description:

Time of Performance Estimated Start Date:

Estimated Completion Date:

Liquidated Damages Will apply: [ ] Will not apply: [X]

Work Order Firm Fixed Price: $610,749.96

Owner Purchase Order Number:

Approvals

Oxnard Housing Authority Date

MDJ Management Date

Detailed Scope of Work

To: Matt McMillon
MDJ Management
531 Main St #611
El Segundo, CA 90245
310-490-1521

From: Fredi Contreras
Oxnard Housing Authority
300 N. Marquita Street
Oxnard, CA 93030
805-890-8319

Date Printed: June 06, 2023

Work Order Number: 116757.00

Work Order Title: Fashion Park Unit 251 Conversion

Brief Scope:

☐ **Preliminary** ☐ **Revised** ☒ **Final**

The following items detail the scope of work as discussed at the site. All requirements necessary to accomplish the items set forth below shall be considered part of this scope of work.

See attached

Subject to the terms and conditions of ezIQC Contract **CA-R7-GB06-123021-MDJ**.

MDJ Management _____ Date _____

Oxnard Housing Authority _____ Date _____

MDJ Management, LLC
License # 1044711
DIR # 1000061313
531 Main St. #611 El Segundo CA 90245
310-490-1521

Job Name: 251 Fashion Park ADA Conversion
Location: 251 Fashion Park Oxnard, CA 93036
Customer: Oxnard Housing Authority

Submission Date: 5/31/23

Detailed Scope of Work

Demolition

- Demolition of existing apartment per plans
- Per Asbestos Survey report provided by client all walls, ceilings and floors to be considered ACM
    - Demolition of unit to be performed by certified hazardous material demolition company

Installation/Buildout

- Saw cutting of slab and demolition of concrete for new plumbing
- Excavation for new plumbing and new concrete footings for addition
- All framing throughout including new walls and soffits
- New rough and finish plumbing throughout
- New electrical rough including new panel per plan
- Concrete work:
    - Pour new footings for addition
    - Pour back all open trenches inside the unit
    - Pour slab for addition
    - Our sidewalk as required
- New windows and doors
- New Insulation
- HVAC ductwork, registers, and wall heaters.
    - Includes new forced air unit
- Drywall throughout
- Lath, stucco, and color coat to match existing
- Roofing, fascia, and gutters for new addition
- Interior paint
- New Flooring and base
- New kitchens, countertops, fixtures, sinks and appliances.

- New bathroom fixtures per plan
- Paint exterior of building
- Site work:
    - New sidewalks
    - Handicap ramp with truncated domes
    - Handicap striping
    - New signage at Handicap stall

Installation/Buildout added by Client NOT included on plans

- Remove and replace all outlets and switches throughout, even on all existing walls
- Remove and replace exterior lighting with LED lighting
    - Match existing 3 fixtures
- Install MDF baseboards
    - Instead of called out cove base
- Remove and replace all interior doors. Complete list of doors from plans as well as clients request:
    - Demo of 3 utility closet, 2 sliding closet, 5 bedroom, and 2 bathroom doors
    - Installation of 2 utility closet, 3 sliding closet, 3 bedroom, 2 bathroom doors, and 1 front door
- Clean up existing back yard, the weeds are 5 feet high
    - Includes weed weed whacking and removal of all dead weeds
- Remove and replace one section of vinyl fence because it is not wide enough for ADA width along concrete path to front door
    - 45 feet x 6 feet high
    - (1) One 4' Gate
    - Includes widening the concrete by one foot

Notes:

- All work to be performed per plans provided to MDJ
- Any additional add on items will be at the request of Customer. Any adjustment shall be an additional cost.
- Price includes all labor (**Normal Working Hours - Davis Bacon Wages**), materials, equipment to complete this scope of work.
- Construction Exclusions:
    - New Washer and Dryer not included in contract.

CLARIFICATIONS AND EXCLUSIONS:

- Warranty
    - One year warranty against workmanship
    - Manufacturer's warranty varies
- We exclude plans, permits, permit fees, related fees, testing, inspection, survey, and engineering unless specified above
- We exclude utilities and hazardous or contaminated material.
- Construction water, power, and sanitary facilities available on site for MDJ's use at no cost.
- We exclude premium time.
- We exclude anything not specifically mentioned above.
- MDJ reserves the right to review, change, and/or delete any provisions of any prime contract or subcontract, which results from this quotation.

- All terms to be net 30 days in full upon receipt of invoice. Interest will be charged at the rate of 2% monthly on the unpaid balance.

BID PRICE: See Price Proposal

All work to be completed in a substantial and workmanlike manner according to standard practices for the sum of **See Price Proposal.** Any additional add on items will be at the request of Customer. Any adjustment shall be an additional cost.

Bid price is good for thirty (30) days only.

Any controversy or claim based on, arising out of, or relating to this agreement, or breach thereof, including any claim based on the work performed pursuant to this agreement, shall be submitted to the American Arbitration Association for binding arbitration in accordance with its rules. If any arbitration, legal action is brought to enforce this agreement, or arising out of or relating to the agreement, the prevailing party shall be entitled to recover from the non-prevailing party reasonable attorney fees and costs incurred, in addition to any and all other relief to which that party may be entitled.

Submitted by:

Matthew McMillon
President MDJ
310.490.1521
matt@buildwithmdj.com

Contractor's Price Proposal - Summary

Date: June 06, 2023

Re:

IQC Master Contract #:	CA-R7-GB06-123021-MDJ
Work Order #:	116757.00
Owner PO #:	
Title:	Fashion Park Unit 251 Conversion
Contractor:	MDJ Management
Proposal Value:	$610,749.96

Section - 01	**$27,922.15**
Section - 02	**$124,779.67**
Section - 03	**$44,628.54**
Section - 06	**$30,807.26**
Section - 07	**$39,946.76**
Section - 08	**$16,937.65**
Section - 09	**$136,489.60**
Section - 10	**$1,650.96**
Section - 11	**$6,131.21**
Section - 12	**$7,227.87**
Section - 22	**$61,651.38**
Section - 23	**$30,704.85**
Section - 26	**$57,035.70**
Section - 31	**$17,571.02**
Section - 32	**$7,265.34**
Proposal Total	**$610,749.96**

Thisl total represents the correct total for the proposal. Any discrepancy between line totals, sub-totals and the proposal total is due to rounding.

The Percentage of NPP on this Proposal: %

Contractor's Price Proposal - Detail

Date: June 06, 2023

Re:

IQC Master Contract #:	CA-R7-GB06-123021-MDJ
Work Order #:	116757.00
Owner PO #:	
Title:	Fashion Park Unit 251 Conversion
Contractor:	MDJ Management
Proposal Value:	$610,749.96

	Sect.	Item	Mod.	UOM	Description	Line Total
Labor	Equip.	Material	(Excludes)			

Section - 01

1	01 22 16	00 0002		EA	Reimbursable FeesReimbursable Fees will be paid to the contractor for eligible costs as directed by Owner. Insert the appropriate quantity to adjust the base cost to the actual Reimbursable Fee. If there are multiple Reimbursable Fees, list each one separately and add a comment in the "note" block to identify the Reimbursable Fee (e.g. sidewalk closure, road cut, various permits, extended warranty, expedited shipping costs, etc.). A copy of each receipt shall be submitted with the Price Proposal.	$13,147.20

	Quantity		Unit Price		Factor		Total
Installation	11,952.00	x	1.00	x	1.1000	=	13,147.20

Bond = $597,602 x 2%

2	01 74 19	00 0016		EA	40 CY Dumpster (5 Ton) "Construction Debris"Includes delivery of dumpster, rental cost, pick-up cost, hauling, and disposal fee. Non-hazardous material.	$11,002.63

	Quantity		Unit Price		Factor		Total
Installation	12.00	x	809.97	x	1.1320	=	11,002.63

10 dumpsters for abatement debris: cabinets, drywall from entire house, shower, toilet, stucco, insulation, ...
2 dumpsters for construction debris: drywall cuts, lumber cuts, basic trash

3	01 74 19	00 0019		EA	15 CY Low-Boy Dumpster Mixed RecyclableFor mixed dirt, rock, concrete brick or asphalt with no trash or organics. Includes service to deliver and pick-up dumpster, hauling, rental and disposal fee.	$3,772.32

	Quantity		Unit Price		Factor		Total
Installation	4.00	x	833.11	x	1.1320	=	3,772.32

for removal of excavated soil for footings, slab, trenching

Subtotal for Section - 01 **$27,922.15**

Section - 02

4	02 41 19	13 0063		LF	Rod Reinforced Concrete Slab Up To 4" Depth, Saw Cut	$2,499.46

	Quantity		Unit Price		Factor		Total
Installation	400.00	x	5.52	x	1.1320	=	2,499.46

sawcut existing slab to trench for new electrical and plumbing runs as needed per plans

5	02 82 33	00 0067		SF	>2,500 To 10,000 SF, Single Layer Gypsum Wall Board, Asbestos Abatement And Disposal	$62,951.52

	Quantity		Unit Price		Factor		Total
Installation	6,684.00	x	8.32	x	1.1320	=	62,951.52

demolition throughout. All drywall mud is hot. ceilings and walls

6	02 82 33	00 0074		SF	>500 To 2,500 SF, Gypsum Wall Board (Or Backer Board) With Ceramic Tile And Mastic, Asbestos Abatement And Disposal	$12,439.55

	Quantity		Unit Price		Factor		Total
Installation	550.00	x	19.98	x	1.1320	=	12,439.55

demolition of bathrooms tile and backer board walls and floor as well as kitchen tile

7	02 82 33	00 0087		SF	>500 To 2,500 SF, Spray On Acoustical Ceiling, Asbestos Abatement And Disposal	$16,659.92

	Quantity		Unit Price		Factor		Total
Installation	1,564.00	x	9.41	x	1.1320	=	16,659.92

demolition

Contractor's Price Proposal - Detail Continues..

Work Order Number: 116757.00
Work Order Title: Fashion Park Unit 251 Conversion

Section - 02

8	02 82 33 00 0101		SF	>500 To 2,500 SF, Single Layer Or First Of Multiple Layers, Floor Tile, Asbestos Abatement And Disposal									$10,959.07
			Installation	Quantity 1,564.00	x	Unit Price 6.19	x	Factor 1.1320	=	Total 10,959.07			
			demolition of 2 layers of floor tile										
9	02 82 33 00 0101	0001		For Each Additional Layer, Add									$2,744.19
			Installation	Quantity 1,564.00	x	Unit Price 1.55	x	Factor 1.1320	=	Total 2,744.19			
10	02 82 33 00 0245		CF	>100 To 250 CF, Asbestos Contaminated Debris, Asbestos Abatement And Disposal									$13,881.15
			Installation	Quantity 250.00	x	Unit Price 49.05	x	Factor 1.1320	=	Total 13,881.15			
			demolition of all cabinets and vanities per plans. They are attached to the walls so removal would disturb drywall material that is hot. This is for kitchen and bathroom										
11	02 82 33 00 0333		SF	High Efficiency Particulate Air (HEPA) Vacuum And Cleaning Of Contaminated Area									$1,186.20
			Installation	Quantity 1,564.00	x	Unit Price 0.67	x	Factor 1.1320	=	Total 1,186.20			
			demolition part of abatement procedures										
12	02 89 00 00 0021		EA	3 Stage Portable Personnel Decontamination Wash FacilityIncludes connection to negative air system.									$907.07
			Installation	Quantity 1.00	x	Unit Price 801.30	x	Factor 1.1320	=	Total 907.07			
			demolition part of abatement procedures										
13	02 89 00 00 0023		EA	Portable Waste Decontamination UnitIncludes connection to negative air system.									$551.54
			Installation	Quantity 1.00	x	Unit Price 487.23	x	Factor 1.1320	=	Total 551.54			
			demolition										

Subtotal for Section - 02 **$124,779.67**

Section - 03

14	03 11 13 00 0003		SF	Continuous Footings Foundation Wood Formwork									$1,882.74
			Installation	Quantity 240.00	x	Unit Price 6.93	x	Factor 1.1320	=	Total 1,882.74			
			footing for new addition										
15	03 11 13 00 0003	0001		For <1,000, Add									$350.47
			Installation	Quantity 240.00	x	Unit Price 1.29	x	Factor 1.1320	=	Total 350.47			
16	03 11 13 00 0009		LF	Up To 6" High Slab Edge and Block-Out Wood Formwork									$699.89
			Installation	Quantity 116.00	x	Unit Price 5.33	x	Factor 1.1320	=	Total 699.89			
			for new addition										
17	03 11 13 00 0009	0004		For Up To 250, Add									$69.28
			Installation	Quantity 60.00	x	Unit Price 1.02	x	Factor 1.1320	=	Total 69.28			
18	03 21 11 00 0251		EA	Dowels Or Hairpin, 1/2" x 30" Length, Drilled And Epoxy In Concrete, 6" Embedment									$5,682.36
			Installation	Quantity 225.00	x	Unit Price 22.31	x	Factor 1.1320	=	Total 5,682.36			
			200 LF of trenching. Epoxy and Dowel every 2'. One on each side. For reinforcement and tying into existing slab adjacent. 25 dowels to attach from porch sidewalk to existing .										

Contractor's Price Proposal - Detail Continues..

Work Order Number: 116757.00
Work Order Title: Fashion Park Unit 251 Conversion

Section - 03

19	03 21 13 00 0093		LF	#6, Grade 50, Slab On Grade, Galvanized Steel Reinforcement Bar								$2,010.43
					Quantity		Unit Price		Factor		Total	
				Installation	800.00	x	2.22	x	1.1320	=	2,010.43	
				200 LF of trenching and 600 LF for slab, porch, and footings. Installation of rebar every 2'.								
20	03 30 53 00 0007		CF	Hand Mix And Place ConcreteFor use where conventional equipment access is limited or when directed by the owner.								$6,592.77
					Quantity		Unit Price		Factor		Total	
				Installation	200.00	x	29.12	x	1.1320	=	6,592.77	
				patch back trenching in existing slab								
21	03 31 13 00 0003		SF	4" 3,000 PSI Slab On Grade Concrete Slabs Assembly								$1,768.18
					Quantity		Unit Price		Factor		Total	
				Installation	200.00	x	7.81	x	1.1320	=	1,768.18	
				for new addition								
22	03 31 13 00 0003	0156		For Up To 500, Add								$681.46
					Quantity		Unit Price		Factor		Total	
				Installation	200.00	x	3.01	x	1.1320	=	681.46	
23	03 31 13 00 0023		CY	Concrete Pump, Place 3,000 PSI Concrete Spread FootingsExcludes pumping equipment.								$14,833.73
					Quantity		Unit Price		Factor		Total	
				Installation	50.00	x	262.08	x	1.1320	=	14,833.73	
				24 CY footing for new addition. 26 CY for Front porch/sloped walk								
24	03 31 13 00 0023	0040		For >20 To 50, Add								$638.45
					Quantity		Unit Price		Factor		Total	
				Installation	50.00	x	11.28	x	1.1320	=	638.45	
25	03 54 16 00 0005		SF	1/2" Thick Self Leveling Cementitious Underlayment For FloorsIncluding Surface Preparation								$9,418.78
					Quantity		Unit Price		Factor		Total	
				Installation	1,564.00	x	5.32	x	1.1320	=	9,418.78	
				self leveling of floors for prior to installation of new vinyl plank flooring								

Subtotal for Section - 03 **$44,628.54**

Section - 06

26	06 11 16 00 0061		SF	2" x 4" Wood Wall Framing At 16" On Center								$2,351.16
					Quantity		Unit Price		Factor		Total	
				Installation	950.00	x	1.58	x	1.1320	=	1,699.13	
				Demolition	800.00	x	0.72	x	1.1320	=	652.03	
				for new walls, new addition, and soffits. Couple walls require double stacked 2x4 staggered A-602								
27	06 11 16 00 0062		SF	2" x 6" Wood Wall Framing At 16" On Center								$616.94
					Quantity		Unit Price		Factor		Total	
				Installation	250.00	x	2.18	x	1.1320	=	616.94	
				2x6 wall per plans								
28	06 11 16 00 0062	0004		For >200 To 500, Add								$101.88
					Quantity		Unit Price		Factor		Total	
				Installation	250.00	x	0.36	x	1.1320	=	101.88	
29	06 11 16 00 0063		SF	2" x 8" Wood Wall Framing At 16" On Center								$263.53
					Quantity		Unit Price		Factor		Total	
				Installation	80.00	x	2.91	x	1.1320	=	263.53	
				2x8 wall per plans								

Contractor's Price Proposal - Detail Continues..

Work Order Number: 116757.00
Work Order Title: Fashion Park Unit 251 Conversion

Section - 06

30	06 11 16 00 0063	0003		For Up To 200, Add									$86.94
			Installation	Quantity 80.00	x	Unit Price 0.96	x	Factor 1.1320	=	Total 86.94			
31	06 11 16 00 0179		LF	2" x 4" Pressure Treated Lumber, For Roofing Nailers									$871.64
			Installation	Quantity 250.00	x	Unit Price 3.08	x	Factor 1.1320	=	Total 871.64			
			for roof framing										
32	06 11 16 00 0183		LF	2" x 4" Pressure Treated Lumber, For Roofing Sleepers									$464.12
			Installation	Quantity 250.00	x	Unit Price 1.64	x	Factor 1.1320	=	Total 464.12			
			for roof framing										
33	06 16 33 00 0006		SF	3/4" Thick CDX Plywood Roof DeckingApplied to wood rafters.									$690.52
			Installation	Quantity 250.00	x	Unit Price 2.44	x	Factor 1.1320	=	Total 690.52			
			for new addition roof										
34	06 16 33 00 0006	0040		For Tongue And Groove, Add									$19.81
			Installation	Quantity 250.00	x	Unit Price 0.07	x	Factor 1.1320	=	Total 19.81			
35	06 16 33 00 0012		SF	1/2" Interior BC Plywood Wall SheathingApplied to wall studs.									$1,036.91
			Installation	Quantity 400.00	x	Unit Price 2.29	x	Factor 1.1320	=	Total 1,036.91			
			for new addition per plans										
36	06 16 33 00 0012	0005		For Shear Wall Construction, Add									$135.84
			Installation	Quantity 400.00	x	Unit Price 0.30	x	Factor 1.1320	=	Total 135.84			
37	06 16 33 00 0012	0006		For Exterior CC Grade Plywood, Add									$54.34
			Installation	Quantity 400.00	x	Unit Price 0.12	x	Factor 1.1320	=	Total 54.34			
38	06 16 33 00 0020		SF	3/4" CD Grade Plywood Floor DeckingApplied to floor or joists.									$5,169.71
			Installation	Quantity 1,564.00	x	Unit Price 2.36	x	Factor 1.1320	=	Total 4,178.26			
			Demolition	1,564.00	x	0.56	x	1.1320	=	991.45			
			for new floor decking per plans FSI/A-602. plans require glue										
39	06 16 33 00 0020	0038		For Exterior Glue, Add									$1,593.40
			Installation	Quantity 15,640.00	x	Unit Price 0.09	x	Factor 1.1320	=	Total 1,593.40			
40	06 41 13 00 0225		EA	15" Wide, 35" High x 23-3/4" Deep, Single Drawer and Single Door, Solid Wood Face Frame, Thermofoil Door and Drawer Front, Base Cabinet									$736.43
			Installation	Quantity 2.00	x	Unit Price 325.28	x	Factor 1.1320	=	Total 736.43			
			demolition of 1 kitchen and installation of 2 new kitchen cabinets per plans										
41	06 41 13 00 0225	0126		For Solid Wood Drawers, Dovetail Joints And Full Extension Drawer Guides, Add									$231.72
			Installation	Quantity 2.00	x	Unit Price 102.35	x	Factor 1.1320	=	Total 231.72			
42	06 41 13 00 0225	0130		For All Plywood Box Construction, Add									$241.55
			Installation	Quantity 2.00	x	Unit Price 106.69	x	Factor 1.1320	=	Total 241.55			

Work Order Number: 116757.00
Work Order Title: Fashion Park Unit 251 Conversion

Section - 06

43	06 41 13 00 0226		EA	18" Wide, 35" High x 23-3/4" Deep, Single Drawer and Single Door, Solid Wood Face Frame, Thermofoil Door and Drawer Front, Base Cabinet									$770.08
			Installation	Quantity 2.00	x	Unit Price 340.14	x	Factor 1.1320	=	Total 770.08			
				demolition of 1 kitchen and installation of 2 new kitchen cabinets per plans									
44	06 41 13 00 0226	0126		For Solid Wood Drawers, Dovetail Joints And Full Extension Drawer Guides, Add									$231.72
			Installation	Quantity 2.00	x	Unit Price 102.35	x	Factor 1.1320	=	Total 231.72			
45	06 41 13 00 0226	0130		For All Plywood Box Construction, Add									$241.55
			Installation	Quantity 2.00	x	Unit Price 106.69	x	Factor 1.1320	=	Total 241.55			
46	06 41 13 00 0228		EA	24" Wide, 35" High x 23-3/4" Deep, Single Drawer and Single Door, Solid Wood Face Frame, Thermofoil Door and Drawer Front, Base Cabinet									$460.91
			Installation	Quantity 1.00	x	Unit Price 407.16	x	Factor 1.1320	=	Total 460.91			
				demolition of 1 kitchen and installation of 2 new kitchen cabinets per plans									
47	06 41 13 00 0228	0126		For Solid Wood Drawers, Dovetail Joints And Full Extension Drawer Guides, Add									$115.86
			Installation	Quantity 1.00	x	Unit Price 102.35	x	Factor 1.1320	=	Total 115.86			
48	06 41 13 00 0228	0130		For All Plywood Box Construction, Add									$120.77
			Installation	Quantity 1.00	x	Unit Price 106.69	x	Factor 1.1320	=	Total 120.77			
49	06 41 13 00 0231		EA	33" Wide, 35" High x 23-3/4" Deep, Single Drawer and Double Door, Solid Wood Face Frame, Thermofoil Door and Drawer Front, Base Cabinet									$1,098.81
			Installation	Quantity 2.00	x	Unit Price 485.34	x	Factor 1.1320	=	Total 1,098.81			
				demolition of 1 kitchen and installation of 2 new kitchen cabinets per plans									
50	06 41 13 00 0231	0126		For Solid Wood Drawers, Dovetail Joints And Full Extension Drawer Guides, Add									$231.72
			Installation	Quantity 2.00	x	Unit Price 102.35	x	Factor 1.1320	=	Total 231.72			
51	06 41 13 00 0231	0130		For All Plywood Box Construction, Add									$241.55
			Installation	Quantity 2.00	x	Unit Price 106.69	x	Factor 1.1320	=	Total 241.55			
52	06 41 13 00 0232		EA	36" Wide, 35" High x 23-3/4" Deep, Single Drawer and Double Door, Solid Wood Face Frame, Thermofoil Door and Drawer Front, Base Cabinet									$1,133.00
			Installation	Quantity 2.00	x	Unit Price 500.44	x	Factor 1.1320	=	Total 1,133.00			
				demolition of 1 kitchen and installation of 2 new kitchen cabinets per plans									
53	06 41 13 00 0232	0126		For Solid Wood Drawers, Dovetail Joints And Full Extension Drawer Guides, Add									$231.72
			Installation	Quantity 2.00	x	Unit Price 102.35	x	Factor 1.1320	=	Total 231.72			
54	06 41 13 00 0232	0130		For All Plywood Box Construction, Add									$241.55
			Installation	Quantity 2.00	x	Unit Price 106.69	x	Factor 1.1320	=	Total 241.55			
55	06 41 13 00 0248		EA	15" Wide, 35" High x 23-3/4" Deep, Four Drawer Base, Solid Wood Face Frame and Thermofoil Drawer Fronts, Base Cabinet									$881.74
			Installation	Quantity 2.00	x	Unit Price 389.46	x	Factor 1.1320	=	Total 881.74			
				demolition of 1 kitchen and installation of 2 new kitchen cabinets per plans									

Contractor's Price Proposal - Detail Continues..

Work Order Number: 116757.00
Work Order Title: Fashion Park Unit 251 Conversion

Section - 06

56	06 41 13 00 0248	0129		For Solid Wood Drawers, Dovetail Joints And Full Extension Drawer Guides, Add									$926.86
			Installation	Quantity		Unit Price		Factor		Total			
				2.00	x	409.39	x	1.1320	=	926.86			
57	06 41 13 00 0248	0130		For All Plywood Box Construction, Add									$241.55
			Installation	Quantity		Unit Price		Factor		Total			
				2.00	x	106.69	x	1.1320	=	241.55			
58	06 41 13 00 0258		EA	33" Wide, 12" High x 12" Deep, Double Door, Solid Wood Face Frame and Thermofoil Doors, Wall Cabinet									$331.44
			Installation	Quantity		Unit Price		Factor		Total			
				1.00	x	292.79	x	1.1320	=	331.44			
				demolition of 1 kitchen and installation of 2 new kitchen cabinets per plans									
59	06 41 13 00 0258	0131		For All Plywood Box Construction, Add									$64.81
			Installation	Quantity		Unit Price		Factor		Total			
				1.00	x	57.25	x	1.1320	=	64.81			
60	06 41 13 00 0259		EA	36" Wide, 12" High x 12" Deep, Double Door, Solid Wood Face Frame and Thermofoil Doors, Wall Cabinet									$365.34
			Installation	Quantity		Unit Price		Factor		Total			
				1.00	x	322.74	x	1.1320	=	365.34			
				demolition of 1 kitchen and installation of 2 new kitchen cabinets per plans									
61	06 41 13 00 0259	0131		For All Plywood Box Construction, Add									$64.81
			Installation	Quantity		Unit Price		Factor		Total			
				1.00	x	57.25	x	1.1320	=	64.81			
62	06 41 13 00 0278		EA	30" Wide, 18" High x 12" Deep, Double Doors, Solid Wood Face Frame and Thermofoil Doors, Wall Cabinet									$722.69
			Installation	Quantity		Unit Price		Factor		Total			
				2.00	x	319.21	x	1.1320	=	722.69			
				demolition of 1 kitchen and installation of 2 new kitchen cabinets per plans									
63	06 41 13 00 0278	0131		For All Plywood Box Construction, Add									$129.61
			Installation	Quantity		Unit Price		Factor		Total			
				2.00	x	57.25	x	1.1320	=	129.61			
64	06 41 13 00 0282		EA	12" Wide, 30" High x 12" Deep, Single Door, Solid Wood Face Frame and Thermofoil Door, Wall Cabinet									$597.90
			Installation	Quantity		Unit Price		Factor		Total			
				2.00	x	264.09	x	1.1320	=	597.90			
				demolition of 1 kitchen and installation of 2 new kitchen cabinets per plans									
65	06 41 13 00 0282	0131		For All Plywood Box Construction, Add									$129.61
			Installation	Quantity		Unit Price		Factor		Total			
				2.00	x	57.25	x	1.1320	=	129.61			
66	06 41 13 00 0283		EA	15" Wide, 30" High x 12" Deep, Single Door, Solid Wood Face Frame and Thermofoil Door, Wall Cabinet									$325.62
			Installation	Quantity		Unit Price		Factor		Total			
				1.00	x	287.65	x	1.1320	=	325.62			
				demolition of 1 kitchen and installation of 2 new kitchen cabinets per plans									
67	06 41 13 00 0283	0131		For All Plywood Box Construction, Add									$64.81
			Installation	Quantity		Unit Price		Factor		Total			
				1.00	x	57.25	x	1.1320	=	64.81			
68	06 41 13 00 0283		EA	15" Wide, 30" High x 12" Deep, Single Door, Solid Wood Face Frame and Thermofoil Door, Wall Cabinet									$325.62
			Installation	Quantity		Unit Price		Factor		Total			
				1.00	x	287.65	x	1.1320	=	325.62			
				demolition of 1 kitchen and installation of 2 new kitchen cabinets per plans									

Contractor's Price Proposal - Detail Continues..

Work Order Number: 116757.00
Work Order Title: Fashion Park Unit 251 Conversion

Section - 06

69	06 41 13 00 0283	0131		For All Plywood Box Construction, Add								$64.81
			Installation	Quantity 1.00	x	Unit Price 57.25	x	Factor 1.1320	=	Total 64.81		
70	06 41 13 00 0284		EA	18" Wide, 30" High x 12" Deep, Single Door, Solid Wood Face Frame and Thermofoil Door, Wall Cabinet								$694.28
			Installation	Quantity 2.00	x	Unit Price 306.66	x	Factor 1.1320	=	Total 694.28		
				demolition of 1 kitchen and installation of 2 new kitchen cabinets per plans								
71	06 41 13 00 0284	0131		For All Plywood Box Construction, Add								$129.61
			Installation	Quantity 2.00	x	Unit Price 57.25	x	Factor 1.1320	=	Total 129.61		
72	06 41 13 00 0289		EA	33" Wide, 30" High x 12" Deep, Double Doors, Solid Wood Face Frame and Thermofoil Doors, Wall Cabinet								$974.72
			Installation	Quantity 2.00	x	Unit Price 430.53	x	Factor 1.1320	=	Total 974.72		
				demolition of 1 kitchen and installation of 2 new kitchen cabinets per plans								
73	06 41 13 00 0289	0131		For All Plywood Box Construction, Add								$129.61
			Installation	Quantity 2.00	x	Unit Price 57.25	x	Factor 1.1320	=	Total 129.61		
74	06 41 13 00 0329		EA	36" Wide, 84" High x 24" Deep, Four Doors, Solid Wood Face Frame and Thermofoil Doors, Pantry Cabinet								$1,462.41
			Installation	Quantity 1.00	x	Unit Price 1,291.88	x	Factor 1.1320	=	Total 1,462.41		
				demolition of 1 kitchen and installation of 2 new kitchen cabinets per plans								
75	06 41 13 00 0329	0132		For All Plywood Box Construction, Add								$239.58
			Installation	Quantity 1.00	x	Unit Price 211.64	x	Factor 1.1320	=	Total 239.58		
76	06 41 93 00 0007		EA	7" To 8-1/2", Flat Cabinet Pull Handle								$2,154.15
			Installation	Quantity 54.00	x	Unit Price 35.24	x	Factor 1.1320	=	Total 2,154.15		
				demolition of 1 kitchen and installation of 2 new kitchen cabinets per plans								

Subtotal for Section - 06 **$30,807.26**

Section - 07

77	07 21 16 00 0006		SF	5-1/2" Thick, Kraft Faced, R-21 Fiberglass Flexible Insulation								$19,505.18
			Installation	Quantity 8,284.00	x	Unit Price 1.72	x	Factor 1.1320	=	Total 16,129.28		
			Demolition	8,284.00	x	0.36	x	1.1320	=	3,375.90		
				removal of existing insulation and installation of new 6684 sqft of walls 1564 sqft of ceilings								
78	07 26 13 00 0010		CSF	Building Wrap (Tyvek)								$5,304.13
			Installation	Quantity 87.50	x	Unit Price 53.55	x	Factor 1.1320	=	Total 5,304.13		
				for new addition								
79	07 31 13 13 0004		SQ	230 LB/SQ, 5" Exposure, Three Tab Fiberglass Reinforced, Asphalt Composition Shingle (CertainTeed XT 30)								$7,409.79
			Installation	Quantity 25.00	x	Unit Price 261.83	x	Factor 1.1320	=	Total 7,409.79		
				new shingle roof for addition								

Contractor's Price Proposal - Detail Continues..

Work Order Number: 116757.00
Work Order Title: Fashion Park Unit 251 Conversion

Section - 07

80	07 34 00 00 0003		SQ	30 LB, Asphalt Saturated Organic Felt Roofing Underlayment, Mechanically Fastened									$1,416.70
			Installation	Quantity 25.00	x	Unit Price 50.06	x	Factor 1.1320	=	Total 1,416.70			
			new shingle roof for addition										
81	07 41 13 00 0026		LF	Eave Flashing For Aluminum Exposed Fastener Metal Roofing									$784.25
			Installation	Quantity 40.00	x	Unit Price 17.32	x	Factor 1.1320	=	Total 784.25			
			for new addition										
82	07 41 13 00 0026	0130		For Fluoropolymer (Kynar®) Coating, Add									$42.11
			Installation	Quantity 40.00	x	Unit Price 0.93	x	Factor 1.1320	=	Total 42.11			
83	07 62 13 00 0033		SF	22 Gauge, 0.034" Thick, Galvanized Steel Flashing									$4,149.91
			Installation	Quantity 300.00	x	Unit Price 12.22	x	Factor 1.1320	=	Total 4,149.91			
			flashing per plans for addition and 100 sqft for new windows										
84	07 62 13 00 0033	0080		For Wrap Around Window Panning, Add									$699.58
			Installation	Quantity 100.00	x	Unit Price 6.18	x	Factor 1.1320	=	Total 699.58			
85	07 71 23 00 0016		LF	6", 0.032" Thick, Box Style Aluminum Gutter									$429.88
			Installation	Quantity 25.00	x	Unit Price 15.19	x	Factor 1.1320	=	Total 429.88			
			rain gutter per plans										
86	07 71 23 00 0016	0322		For Up To 100', Add									$70.18
			Installation	Quantity 25.00	x	Unit Price 2.48	x	Factor 1.1320	=	Total 70.18			
87	07 71 23 00 0029		EA	6", Box Style Aluminum Gutter End Cap									$18.34
			Installation	Quantity 2.00	x	Unit Price 8.10	x	Factor 1.1320	=	Total 18.34			
			rain gutter per plans										
88	07 71 23 00 0055		LF	4" x 5", 0.019" Thick, Rectangular Aluminum Downspout									$102.67
			Installation	Quantity 10.00	x	Unit Price 9.07	x	Factor 1.1320	=	Total 102.67			
			rain gutter per plans										
89	07 71 23 00 0055	0325		For Up To 100', Add									$14.04
			Installation	Quantity 10.00	x	Unit Price 1.24	x	Factor 1.1320	=	Total 14.04			

Subtotal for Section - 07 **$39,946.76**

Section - 08

90	08 05 13 00 0041		EA	Factory Prepare Wood Door (Rated Or Non-Rated) For Mortise Lockset Hardware									$470.41
			Installation	Quantity 6.00	x	Unit Price 69.26	x	Factor 1.1320	=	Total 470.41			
			for all new doors. 1 front door, 2 bath, and 3 bedroom										

Contractor's Price Proposal - Detail Continues..

Work Order Number: 116757.00
Work Order Title: Fashion Park Unit 251 Conversion

Section - 08

91	08 14 16 00 0134	EA	3'-0" x 6'-8" x 1-3/4" Thick, 5 Ply, Hollow Core (HC), Birch Faced Wood Door									$2,910.85
				Quantity		Unit Price		Factor		Total		
			Installation	7.00	x	288.16	x	1.1320	=	2,283.38		
			Demolition	10.00	x	55.43	x	1.1320	=	627.47		
			Demo of 3 utility closet, 5 bedroom, and 2 bathroom doors. Installation of 2 utility closet, 3 bedroom, 2 bathroom doors.									
92	08 14 73 00 0074	EA	5' Wide, Two 2'-6" x 6'-8" x 1-3/8" Thick, Flush, Hollow Core (HC), Birch Faced Wood Bi-Pass Doors									$1,525.71
				Quantity		Unit Price		Factor		Total		
			Installation	3.00	x	396.94	x	1.1320	=	1,348.01		
			Demolition	2.00	x	78.49	x	1.1320	=	177.70		
			removal of 2 existing closet sliding doors, installation of 3 new closet sliding doors									
93	08 53 13 00 0549	EA	>110" To 120" UI, Horizontal Sliding Premium Vinyl Window (Pella 350)									$4,060.21
				Quantity		Unit Price		Factor		Total		
			Installation	5.00	x	631.42	x	1.1320	=	3,573.84		
			Demolition	6.00	x	71.61	x	1.1320	=	486.38		
			removal of 6 existing windows. Installation of 5 new windows per plans									
94	08 71 11 00 0004	PR	3-1/2" x 3-1/2" Standard Duty, Full Mortise, Plain Bearing, Brass/Bronze, Satin Chrome Finish Hinge									$652.61
				Quantity		Unit Price		Factor		Total		
			Installation	7.00	x	73.13	x	1.1320	=	579.48		
			Demolition	10.00	x	6.46	x	1.1320	=	73.13		
			Demo of 3 utility closet, 5 bedroom, and 2 bathroom doors. Installation of 2 utility closet, 3 bedroom, 2 bathroom doors.									
95	08 71 11 00 0005	PR	4" x 4" Standard Duty, Full Mortise, Plain Bearing, Brass/Bronze, Satin Chrome Finish Hinge									$136.35
				Quantity		Unit Price		Factor		Total		
			Installation	1.50	x	80.30	x	1.1320	=	136.35		
			for new front door per plans									
96	08 71 11 00 0513	EA	3" Projection, Residential Spring Type, Bright Brass Finish, Steel Wall Stop (Ives 63)									$130.43
				Quantity		Unit Price		Factor		Total		
			Installation	7.00	x	9.86	x	1.1320	=	78.13		
			Demolition	10.00	x	4.62	x	1.1320	=	52.30		
			per plans									
97	08 71 11 00 0655	EA	190 Degree Angle Of View, Bright Brass Finish, Brass One-Way Wide Angle Door Viewer (Ives U698)									$47.59
				Quantity		Unit Price		Factor		Total		
			Installation	1.00	x	42.04	x	1.1320	=	47.59		
			for new front door per plans									
98	08 71 11 00 2288	EA	Passage/Closet F01 Mortise LatchsetBoth sides always unlocked.									$1,471.62
				Quantity		Unit Price		Factor		Total		
			Installation	2.00	x	615.36	x	1.1320	=	1,393.18		
			Demolition	3.00	x	23.10	x	1.1320	=	78.45		
			Demo of 3 utility closet. Installation of 2 utility closet doors									
99	08 71 11 00 2289	EA	Bath/Bedroom Privacy F02/F19 Mortise LocksetLocked with thumb knob inside.									$4,323.67
				Quantity		Unit Price		Factor		Total		
			Installation	5.00	x	731.56	x	1.1320	=	4,140.63		
			Demolition	7.00	x	23.10	x	1.1320	=	183.04		
			Demo of 5 bedroom, and 2 bathroom doors. Installation of 3 bedroom, 2 bathroom doors.									

Contractor's Price Proposal - Detail Continues..

Work Order Number: 116757.00
Work Order Title: Fashion Park Unit 251 Conversion

Section - 08

100	08 71 11 00 2293		EA	Entrance F08 Mortise LocksetLocked with key outside and thumb knob inside.								$960.13
					Quantity		Unit Price		Factor		Total	
				Installation	1.00	x	848.17	x	1.1320	=	960.13	
				for new front door per plans								
101	08 71 11 00 2293	0263		For Satin Brass Clear Coat US4 (BHMA 606) Finish, Add								$42.78
					Quantity		Unit Price		Factor		Total	
				Installation	1.00	x	37.79	x	1.1320	=	42.78	
102	08 72 33 00 0155		LF	3/8" x 3/16", Silicon Compression Bulb, Adhesive Backed Perimeter Gasketing Weather-Strip (Pemko PK33)								$63.89
					Quantity		Unit Price		Factor		Total	
				Installation	17.00	x	3.32	x	1.1320	=	63.89	
				for new front door per plans								
103	08 72 43 00 0011		LF	6" Width, 1/4" Height, Aluminum Saddle Threshold (Pemko 272A)								$125.07
					Quantity		Unit Price		Factor		Total	
				Installation	3.00	x	36.83	x	1.1320	=	125.07	
				for new front door per plans								
104	08 72 43 00 0011	0458		For Color Anodized Finish, Add								$16.33
					Quantity		Unit Price		Factor		Total	
				Installation	3.00	x	4.81	x	1.1320	=	16.33	

Subtotal for Section - 08 **$16,937.65**

Section - 09

105	09 05 71 00 0002		SF	5 Mil Tile And Stone Acoustical Underlayment (EasyMat)								$6,391.32
					Quantity		Unit Price		Factor		Total	
				Installation	1,564.00	x	3.61	x	1.1320	=	6,391.32	
				acousthmat underlayment per plans FSI/A-602								
106	09 05 71 00 0005		SF	2 MM Thick Resilient Plank Floor Acoustical Underlayment (Floormuffler)								$2,637.97
					Quantity		Unit Price		Factor		Total	
				Installation	1,564.00	x	1.49	x	1.1320	=	2,637.97	
				closest LI to gypsum sanded floor underlayment per plans FSI/A-602								
107	09 22 13 23 0008		SF	25 Gauge, 16" On Center, Installed On Walls, Double-Leg Resilient Channel, RC2 Furring Channel								$2,604.73
					Quantity		Unit Price		Factor		Total	
				Installation	650.00	x	3.54	x	1.1320	=	2,604.73	
				Resilient channel per plans A-602								
108	09 22 13 23 0010		SF	25 Gauge, 16" On Center, Installed On Ceilings, Double-Leg Resilient Channel, RC2 Furring Channel								$7,418.18
					Quantity		Unit Price		Factor		Total	
				Installation	1,564.00	x	4.19	x	1.1320	=	7,418.18	
				Resilient channel per plans FSI/A-602								
109	09 22 36 23 0005		SF	3.4 LB/SY, Installed On Studs Or Furred Walls, Flat Diamond, Expanded Metal Lath								$3,022.16
					Quantity		Unit Price		Factor		Total	
				Installation	875.00	x	2.53	x	1.1320	=	2,505.97	
				Demolition	800.00	x	0.57	x	1.1320	=	516.19	
				removal of existing stucco and installation of new for new addition and new front entrance								

Work Order Number: 116757.00
Work Order Title: Fashion Park Unit 251 Conversion

Section - 09

110	09 24 23 00 0002		SF	Scratch/Brown/Finish, Three Coat Troweled StuccoExcludes lath and felt. Interior or exterior, one side.								$10,885.03
					Quantity		Unit Price		Factor		Total	
				Installation	875.00	x	8.53	x	1.1320	=	8,448.97	
				Demolition	800.00	x	2.69	x	1.1320	=	2,436.06	
				removal of existing stucco and installation of new for new addition and new front entrance								
111	09 24 23 00 0004		SF	Scratch/Finish, Two Coat Troweled StuccoExcludes lath and felt. Interior or exterior, one side.								$6,763.70
					Quantity		Unit Price		Factor		Total	
				Installation	875.00	x	5.64	x	1.1320	=	5,586.42	
				Demolition	800.00	x	1.30	x	1.1320	=	1,177.28	
				removal of existing stucco and installation of new for new addition and new front entrance								
112	09 24 23 00 0005		SF	Finish Coat Troweled StuccoExcludes lath and felt. Interior or exterior, one side.								$4,373.48
					Quantity		Unit Price		Factor		Total	
				Installation	875.00	x	3.62	x	1.1320	=	3,585.61	
				Demolition	800.00	x	0.87	x	1.1320	=	787.87	
				removal of existing stucco and installation of new for new addition and new front entrance								
113	09 29 10 00 0006		SF	5/8" Gypsum Board								$14,191.84
					Quantity		Unit Price		Factor		Total	
				Installation	8,248.00	x	1.52	x	1.1320	=	14,191.84	
				for walls and ceilings per plans								
114	09 29 10 00 0038		SF	Up To 10' High, Walls, Tape, Spackle And Finish Gypsum Board								$4,464.11
					Quantity		Unit Price		Factor		Total	
				Installation	6,684.00	x	0.59	x	1.1320	=	4,464.11	
				for walls								
115	09 29 10 00 0038	0048		For ASTM C840 Level 5 High Quality Finish, Add								$3,329.17
					Quantity		Unit Price		Factor		Total	
				Installation	6,684.00	x	0.44	x	1.1320	=	3,329.17	
116	09 29 10 00 0041		SF	Up To 10' High, Ceilings, Tape, Spackle And Finish Gypsum Board								$1,363.25
					Quantity		Unit Price		Factor		Total	
				Installation	1,564.00	x	0.77	x	1.1320	=	1,363.24	
				for ceilings								
117	09 29 10 00 0041	0048		For ASTM C840 Level 5 High Quality Finish, Add								$10,091.55
					Quantity		Unit Price		Factor		Total	
				Installation	15,640.00	x	0.57	x	1.1320	=	10,091.55	
118	09 29 10 00 0044		LF	Up To 10' High, Vertical Corners, Tape, Spackle And Finish Gypsum Board								$1,651.00
					Quantity		Unit Price		Factor		Total	
				Installation	1,236.00	x	1.18	x	1.1320	=	1,651.00	
				walls: 150 vertical corners @ 8' throughout both floors. windows: 36 LF of vertical corners								
119	09 29 10 00 0044	0048		For ASTM C840 Level 5 High Quality Finish, Add								$1,217.26
					Quantity		Unit Price		Factor		Total	
				Installation	1,236.00	x	0.87	x	1.1320	=	1,217.26	
120	09 29 10 00 0047		LF	Up To 10' High, Horizontal Corners, Tape, Spackle And Finish Gypsum Board								$1,209.66
					Quantity		Unit Price		Factor		Total	
				Installation	780.00	x	1.37	x	1.1320	=	1,209.66	
				750 LF of walls and 30 LF of windows								

Work Order Number: 116757.00
Work Order Title: Fashion Park Unit 251 Conversion

Section - 09

121	09 29 10 00 0047	0048		For ASTM C840 Level 5 High Quality Finish, Add								$891.79
			Installation	Quantity 780.00	x	Unit Price 1.01	x	Factor 1.1320	=	Total 891.79		
122	09 29 10 00 0051		LF	Corner Bead, Galvanized Steel For Gypsum Board								$7,508.15
			Installation	Quantity 2,016.00	x	Unit Price 3.29	x	Factor 1.1320	=	Total 7,508.15		
			walls: 150 vertical corners @ 8' throughout both floors. 750 LF of horizontal corners Windows: 86 LF									
123	09 65 13 13 0003		LF	4" High, 1/8" Thick, Type TV Thermoplastic Vinyl Wall Base, All Colors								$2,844.15
			Installation	Quantity 750.00	x	Unit Price 3.35	x	Factor 1.1320	=	Total 2,844.15		
			750 LF of walls									
124	09 65 23 00 0004		SF	0.16" Overall Thickness, 0.020" Wear Layer, Vinyl Plank Flooring (Armstrong® Luxe Plank™)								$16,907.78
			Installation	Quantity 1,564.00	x	Unit Price 9.55	x	Factor 1.1320	=	Total 16,907.78		
			new flooring throughout per plans									
125	09 91 13 00 0095		SF	1 Coat Primer, Brush/Roller Work, Paint Exterior Stucco Walls								$1,236.14
			Installation	Quantity 1,400.00	x	Unit Price 0.78	x	Factor 1.1320	=	Total 1,236.14		
			paint front and side of building for affected areas corner to corner									
126	09 91 13 00 0097		SF	2 Coats Paint, Brush/Roller Work, Paint Exterior Stucco Walls								$2,599.07
			Installation	Quantity 1,400.00	x	Unit Price 1.64	x	Factor 1.1320	=	Total 2,599.07		
			paint front and side of building for affected areas corner to corner									
127	09 91 23 00 0067		SF	1 Coat Primer, Brush/Roller Work, Paint Interior Plaster/Drywall Walls								$4,161.46
			Installation	Quantity 6,684.00	x	Unit Price 0.55	x	Factor 1.1320	=	Total 4,161.46		
			for walls									
128	09 91 23 00 0069		SF	2 Coats Paint, Brush/Roller Work, Paint Interior Plaster/Drywall Walls								$8,322.92
			Installation	Quantity 6,684.00	x	Unit Price 1.10	x	Factor 1.1320	=	Total 8,322.92		
			for walls									
129	09 91 23 00 0161		SF	1 Coat Primer, Brush/Roller Work, Paint Interior Drywall/Plaster Ceiling								$1,150.79
			Installation	Quantity 1,564.00	x	Unit Price 0.65	x	Factor 1.1320	=	Total 1,150.79		
			for ceilings									
130	09 91 23 00 0163		SF	2 Coats Paints, Brush/Roller Work, Paint Interior Drywall/Plaster Ceiling								$2,071.42
			Installation	Quantity 1,564.00	x	Unit Price 1.17	x	Factor 1.1320	=	Total 2,071.42		
			for ceilings									
131	09 91 23 00 0252		LF	1 Coat Primer, Brush/Roller Work, Paint Interior Wood Door Frame And Trim								$570.53
			Installation	Quantity 600.00	x	Unit Price 0.84	x	Factor 1.1320	=	Total 570.53		
			15 total doors. 40 LF of trim per door									
132	09 91 23 00 0254		LF	2 Coats Paint, Brush/Roller Work, Paint Interior Wood Door Frame And Trime								$1,249.73
			Installation	Quantity 600.00	x	Unit Price 1.84	x	Factor 1.1320	=	Total 1,249.73		
			15 total doors. 40 LF of trim per door									

Contractor's Price Proposal - Detail Continues..

Work Order Number: 116757.00
Work Order Title: Fashion Park Unit 251 Conversion

Section - 09

133	09 91 23 00 0275	EA	1 Coat Primer, Brush/Roller Work, Both Faces, Paint Interior Wood Door								$1,153.96
				Quantity		Unit Price		Factor		Total	
			Installation	15.00	x	67.96	x	1.1320	=	1,153.96	
			8 doors on first floor 7 doors on second floor								
134	09 91 23 00 0277	EA	2 Coats Paint, Brush/Roller Work, Both Faces, Paint Interior Wood Door								$2,072.58
				Quantity		Unit Price		Factor		Total	
			Installation	15.00	x	122.06	x	1.1320	=	2,072.58	
			8 doors on first floor 7 doors on second floor								
135	09 91 23 00 0307	LF	1 Coat Primer, Brush/Roller Work, Paint Interior Wood Window Frame And Trim								$163.73
				Quantity		Unit Price		Factor		Total	
			Installation	128.00	x	1.13	x	1.1320	=	163.73	
			8 windows with 128 LF of trim								
136	09 91 23 00 0309	LF	2 Coats Paint, Brush/Roller Work, Paint Interior Wood Window Frame And Trim								$357.89
				Quantity		Unit Price		Factor		Total	
			Installation	128.00	x	2.47	x	1.1320	=	357.89	
			8 windows with 128 LF of trim								
137	09 91 23 00 0350	LF	1 Coat Primer, Brush Work, Paint Interior Wood Trim To 6" Wide								$492.42
				Quantity		Unit Price		Factor		Total	
			Installation	750.00	x	0.58	x	1.1320	=	492.42	
			750 LF of baseboards								
138	09 91 23 00 0352	LF	2 Coats Paint, Paint Interior Wood Trim to 6" Wide								$1,120.68
				Quantity		Unit Price		Factor		Total	
			Installation	750.00	x	1.32	x	1.1320	=	1,120.68	
			750 LF of baseboards								

Subtotal for Section - 09 **$136,489.60**

Section - 10

139	10 28 13 13 0045	EA	Single Roll, Surface Mounted, Stainless Steel, Satin Finish, Toilet Tissue Dispenser (Bobrick B-6857)								$123.83
				Quantity		Unit Price		Factor		Total	
			Installation	1.00	x	88.61	x	1.1320	=	100.31	
			Demolition	1.00	x	20.78	x	1.1320	=	23.52	
			per plans								
140	10 28 13 13 0170	EA	36" Length, 1-1/2" Diameter, Stainless Steel Grab Bar (Bobrick B-6806x36)								$311.68
				Quantity		Unit Price		Factor		Total	
			Installation	3.00	x	91.78	x	1.1320	=	311.68	
			per plans								
141	10 28 13 13 0171	EA	42" Length, 1-1/2" Diameter, Stainless Steel Grab Bar (Bobrick B-6806x42)								$106.14
				Quantity		Unit Price		Factor		Total	
			Installation	1.00	x	93.76	x	1.1320	=	106.14	
			per plans								
142	10 28 13 13 0217	EA	Telescoping 60" To 72" Length, 20-Gauge, 1" Diameter, Stainless Steel Curved Shower Rod With Concealed Mounting (Kohler Expanse K-9349)								$158.19
				Quantity		Unit Price		Factor		Total	
			Installation	1.00	x	118.96	x	1.1320	=	134.66	
			Demolition	1.00	x	20.78	x	1.1320	=	23.52	
			per plans								

Contractor's Price Proposal - Detail Continues..

Work Order Number: 116757.00
Work Order Title: Fashion Park Unit 251 Conversion

Section - 10

143	10 28 13 13 0322	EA	24" Length, 3/4" Diameter, Stainless Steel Towel Bar (Bobrick B-674)									$133.36
				Quantity		Unit Price		Factor		Total		
			Installation	1.00	x	97.03	x	1.1320	=	109.84		
			Demolition	1.00	x	20.78	x	1.1320	=	23.52		
			per plans									
144	10 28 13 13 0390	EA	20" x 26", Surface Mounted, Aluminum Medicine Cabinet (Kohler K-CB)									$817.76
				Quantity		Unit Price		Factor		Total		
			Installation	1.00	x	676.23	x	1.1320	=	765.49		
			Demolition	1.00	x	46.17	x	1.1320	=	52.26		
			per plans									

Subtotal for Section - 10 **$1,650.96**

Section - 11

145	11 30 13 13 0010	EA	30" Gas Range With Oven									$2,325.17
				Quantity		Unit Price		Factor		Total		
			Installation	2.00	x	985.73	x	1.1320	=	2,231.69		
			Demolition	1.00	x	82.58	x	1.1320	=	93.48		
			remove and save existing for clients attic stock. Installation of 2 new.									
146	11 30 13 13 0015	EA	30" Venting Range Hood (Broan 40000)									$619.32
				Quantity		Unit Price		Factor		Total		
			Installation	2.00	x	242.58	x	1.1320	=	549.20		
			Demolition	1.00	x	61.94	x	1.1320	=	70.12		
			removal of existing and installation of 2 new									
147	11 30 13 13 0048	EA	>16 To 18 CF Top Freezer Refrigerator									$2,550.65
				Quantity		Unit Price		Factor		Total		
			Installation	2.00	x	1,105.96	x	1.1320	=	2,503.89		
			Demolition	1.00	x	41.30	x	1.1320	=	46.75		
			remove and save existing for clients attic stock. Installation of 2 new.									
148	11 30 13 13 0084	EA	1/3 HP Insulated Garbage Disposal (GE GFC320V)									$636.07
				Quantity		Unit Price		Factor		Total		
			Installation	2.00	x	249.98	x	1.1320	=	565.95		
			Demolition	1.00	x	61.94	x	1.1320	=	70.12		
			removal o existing and installation of new									

Subtotal for Section - 11 **$6,131.21**

Section - 12

149	12 36 61 19 0005	SF	1-1/4" Thick, Quartz Agglomerate Countertop With Backsplash									$6,914.26
				Quantity		Unit Price		Factor		Total		
			Installation	50.00	x	122.16	x	1.1320	=	6,914.26		
			25 LF of kitchen countertops									
150	12 36 61 19 0007	EA	Cutout For Sink And/Or Faucet In Quartz Agglomerate Countertop									$313.61
				Quantity		Unit Price		Factor		Total		
			Installation	2.00	x	138.52	x	1.1320	=	313.61		
			2 kitchen sinks									

Subtotal for Section - 12 **$7,227.87**

Section - 22

Contractor's Price Proposal - Detail Continues..

Work Order Number: 116757.00
Work Order Title: Fashion Park Unit 251 Conversion

Section - 22

151	22 01 40 81 0004	EA	Removal And Replacement Of Chrome Supply Lines To Sink/Lavatory, Pair								$297.60
				Quantity		Unit Price		Factor		Total	
			Installation	10.00	x	26.29	x	1.1320	=	297.60	
			replace supply lines in kitchens and bathrooms								
152	22 01 40 81 0006	EA	Removal And Replacement Of Double Bowl Sink/Lavatory Drain Line								$128.73
				Quantity		Unit Price		Factor		Total	
			Installation	2.00	x	56.86	x	1.1320	=	128.73	
			new drain lines								
153	22 11 16 00 0003	LF	3/4" Schedule 40 Threaded Galvanized Steel Pipe With 150 LB Malleable Iron Fitting AssemblyIncludes all hangers and all galvanized malleable iron fittings (couplings, elbows, tees and reducer fittings). All hangers are complete assemblies. Not for use where detail is available.								$7,127.07
				Quantity		Unit Price		Factor		Total	
			Installation	300.00	x	18.30	x	1.1320	=	6,214.68	
			Demolition	200.00	x	4.03	x	1.1320	=	912.39	
			gas line piping								
154	22 11 16 00 0901	LF	3/4" Inside Diameter Copper Pipe/Tubing Type L AssemblyIncludes all hangers and couplings, elbow, tee, reducer fittings. All hangers are complete assemblies. Not for use where detail is available.								$19,234.38
				Quantity		Unit Price		Factor		Total	
			Installation	650.00	x	24.17	x	1.1320	=	17,784.29	
			Demolition	350.00	x	3.66	x	1.1320	=	1,450.09	
			water line copper piping								
155	22 12 23 13 0002	EA	80 Gallon ASME Rated Tank, 150PSI, Jacketed, Insulated, Glass Lined Water Heater Storage Tank (TJ-80A)								$424.28
				Quantity		Unit Price		Factor		Total	
			Installation	0.00	x	2,141.02	x	1.1320	=	0.00	
			Demolition	1.00	x	374.81	x	1.1320	=	424.28	
			removal of existing water heater								
156	22 13 16 00 0509	LF	4" Schedule 40 Polyvinyl Chloride (PVC) DWV Pipe AssemblyIncludes all fittings, couplings and hangers. Fittings are assumed every 10'. Not for use where detail is available.								$20,147.62
				Quantity		Unit Price		Factor		Total	
			Installation	400.00	x	39.47	x	1.1320	=	17,872.02	
			Demolition	275.00	x	7.31	x	1.1320	=	2,275.60	
			Sewer and vent piping								
157	22 34 13 00 0011	EA	7.4 GPM, Outdoor Mount, Instantaneous, Tankless, Gas Domestic Water Heater (Rheem RTG-74XN)								$5,196.24
				Quantity		Unit Price		Factor		Total	
			Installation	2.00	x	2,295.16	x	1.1320	=	5,196.24	
			installation of 2 new water heaters								
158	22 41 16 16 0003	EA	33" x 21" x 6-1/2" Stainless Steel Kitchen Sink, Double Bowl, 20 Gauge (Elkay D233213)								$1,488.27
				Quantity		Unit Price		Factor		Total	
			Installation	2.00	x	607.23	x	1.1320	=	1,374.77	
			Demolition	1.00	x	100.27	x	1.1320	=	113.51	
			removal of existing and installation of new.								
159	22 41 39 00 0006	EA	Chrome Two Handle Kitchen Faucet With Spray, Three Hole Installation, 8" Center (Delta 2402LF-LHP+H215)								$454.33
				Quantity		Unit Price		Factor		Total	
			Installation	2.00	x	177.25	x	1.1320	=	401.29	
			Demolition	1.00	x	46.85	x	1.1320	=	53.03	
			removal of existing and installation of new.								

Contractor's Price Proposal - Detail Continues..

Work Order Number: 116757.00
Work Order Title: Fashion Park Unit 251 Conversion

Section - 22

160	22 42 13 13 0027	EA	2 Piece Tank Type, Pressure Assisted, Siphon Jet, Floor Mounted, Back Outlet, Handicap Accessible, Elongated Vitreous China Water Closet (American Standard Yorkville™ ADA)								$1,300.36
				Quantity		Unit Price		Factor		Total	
			Installation	1.00	x	1,051.28	x	1.1320	=	1,190.05	
			Demolition	1.00	x	97.45	x	1.1320	=	110.31	
			remove existing and install new ADA toilet								
161	22 42 16 13 0009	EA	27" x 20" Wheelchair Accessible, Vitreous China Wall Hung Lavatory (American Standard Wheel Chair Users)								$776.98
				Quantity		Unit Price		Factor		Total	
			Installation	1.00	x	623.60	x	1.1320	=	705.92	
			Demolition	1.00	x	62.78	x	1.1320	=	71.07	
			remove existing and install new ADA sink, faucet, and drain cover.								
162	22 42 19 00 0027	EA	3 Piece Tub/Shower Surrounds, 32" x 72" Side Walls, 48" x 72" Back, (Swanstone SK-324872)								$3,166.32
				Quantity		Unit Price		Factor		Total	
			Installation	1.00	x	2,797.10	x	1.1320	=	3,166.32	
			new tub/shower for ADA bathroom								
163	22 42 39 00 0042	EA	Single Supply EcoPower® Faucet, Polished Chrome Finish (Toto TEL3LS10#CP)								$709.36
				Quantity		Unit Price		Factor		Total	
			Installation	1.00	x	626.64	x	1.1320	=	709.36	
			ADA sink, faucet, and drain cover.								
164	22 42 39 00 0064	EA	Three Lever Handle, Chrome Shower And Tub Filler (American Standard Colony Soft 3375.502)								$293.63
				Quantity		Unit Price		Factor		Total	
			Installation	1.00	x	218.72	x	1.1320	=	247.59	
			Demolition	1.00	x	40.67	x	1.1320	=	46.04	
			per plans								
165	22 42 39 00 0210	EA	Lavatory Protective Enclosure (IPS Truebro Lav Shield)								$350.49
				Quantity		Unit Price		Factor		Total	
			Installation	2.00	x	154.81	x	1.1320	=	350.49	
			drain cover for ADA kitchen and bathroom sink								
166	22 42 39 00 0217	EA	1/2" NPT x 3/8" Compression Chrome, Quarter Turn Dual Angle Stop (SharkBite 25558)								$555.72
				Quantity		Unit Price		Factor		Total	
			Installation	10.00	x	41.22	x	1.1320	=	466.61	
			Demolition	8.00	x	9.84	x	1.1320	=	89.11	
			new angle stops installed in bathrooms and kitchens								

Subtotal for Section - 22 **$61,651.38**

Section - 23

167	23 05 93 00 0017	EA	Balancing HVAC Duct System, Floor Height Supply, Return, Exhaust, Register And Diffuser								$61.88
				Quantity		Unit Price		Factor		Total	
			Installation	1.00	x	54.66	x	1.1320	=	61.88	
			required setup, balancing, and charging for new system								
168	23 09 23 53 0284	EA	Scheduling Program, HVAC (AHU, RTU, AC Units, Etcetera) Programming Measures								$3,880.60
				Quantity		Unit Price		Factor		Total	
			Installation	1.00	x	3,428.09	x	1.1320	=	3,880.60	
			required setup, balancing, and charging for new system								

Work Order Number: 116757.00
Work Order Title: Fashion Park Unit 251 Conversion

Section - 23

169	23 31 13 16 0063	EA	4" Diameter, 26 Gauge, 2" WG And Less (Class C), Galvanized Sheet Metal Round And Flat-Oval Connector									$240.41
				Quantity		Unit Price		Factor		Total		
			Installation	14.00	x	15.17	x	1.1320	=	240.41		
			exhaust ducting for dyer per plans									
170	23 33 13 13 0006	EA	12" Diameter Radial Opposed Blade Damper Round, Steel Construction, Manual Operated									$140.78
				Quantity		Unit Price		Factor		Total		
			Installation	1.00	x	113.45	x	1.1320	=	128.43		
			Demolition	1.00	x	10.91	x	1.1320	=	12.35		
			HVAC per plans									
171	23 33 46 00 0008	LF	12" Diameter Flexible Duct, R8.0 Insulated With Polyester Inner Liner And Metallized Outer Jacket									$2,231.74
				Quantity		Unit Price		Factor		Total		
			Installation	100.00	x	15.36	x	1.1320	=	1,738.75		
			Demolition	130.00	x	3.35	x	1.1320	=	492.99		
			HVAC per plans									
172	23 33 46 00 0020	EA	12" Diameter Flexible Duct Collar, Spin In Type, Sheet Metal, With Damper									$100.97
				Quantity		Unit Price		Factor		Total		
			Installation	1.00	x	76.62	x	1.1320	=	86.73		
			Demolition	1.00	x	12.58	x	1.1320	=	14.24		
			HVAC per plans									
173	23 34 16 00 0127	EA	30" Diameter Wheel, 2 HP, 10,192 CFM At 1/4" Static Pressure, Belt Drive, Kitchen Upblast Exhaust Fan115/208-230/60/3. Includes heat baffle, grease baffle and disconnect switch.									$9,622.60
				Quantity		Unit Price		Factor		Total		
			Installation	2.00	x	4,153.39	x	1.1320	=	9,403.27		
			Demolition	1.00	x	193.75	x	1.1320	=	219.33		
			removal of one existing and installation of 2 new									
174	23 34 16 00 0275	EA	109 CFM, Ceiling/Wall Mounted, Metal Intake Grille, Heavy Duty/Continuous Operation Exhaust Fan (Broan® LoSone® Ventilator L100MG)									$897.54
				Quantity		Unit Price		Factor		Total		
			Installation	2.00	x	379.30	x	1.1320	=	858.74		
			Demolition	1.00	x	34.28	x	1.1320	=	38.80		
			exhaust fan per plans EF-1									
175	23 37 13 13 0080	EA	20" x 20" Single Deflection Return/Exhaust Register, Aluminum, Opposed Blade Damper, Wall/Ceiling									$319.70
				Quantity		Unit Price		Factor		Total		
			Installation	1.00	x	265.64	x	1.1320	=	300.70		
			Demolition	1.00	x	16.78	x	1.1320	=	18.99		
			HVAC per plans									
176	23 37 13 13 0225	EA	18" x 8" 4-Way Adjustable Wall Supply Grille, Adjustable Deflection, Aluminum Construction									$2,395.67
				Quantity		Unit Price		Factor		Total		
			Installation	7.00	x	275.90	x	1.1320	=	2,186.23		
			Demolition	11.00	x	16.82	x	1.1320	=	209.44		
			HVAC per plans									
177	23 54 16 13 0007	EA	120 MBH, 2,000 CFM Up/Horizontal Flow Multi-Speed, Two Stage 96% AFUE Gas FurnaceBlower cooling capacity up to 5 tons.									$5,879.99
				Quantity		Unit Price		Factor		Total		
			Installation	2.00	x	2,597.17	x	1.1320	=	5,879.99		
			per plans. SH-1 and SH-2 wall mounted furnaces									

Contractor's Price Proposal - Detail Continues..

Work Order Number: 116757.00
Work Order Title: Fashion Park Unit 251 Conversion

Section - 23

178	23 81 49 00 0020	EA	7-1/2 Ton Indoor Section Split Heat Pump Packaged Unit, Horizontal Upflow With 10 KW Electric Heat									$4,932.97
				Quantity		Unit Price		Factor		Total		
			Installation	1.00	x	4,047.74	x	1.1320	=	4,582.04		
			Demolition	1.00	x	310.01	x	1.1320	=	350.93		
			new furnace per clients request									

Subtotal for Section - 23 **$30,704.85**

Section - 26

179	26 01 20 91 0002	EA	Lock Out/Tag Out Local DisconnectExcludes tag or padlock See CSI section 26 01 20 91-0004 for padlock, 26 01 20 91-0005 for tag(s).									$523.83
				Quantity		Unit Price		Factor		Total		
			Installation	15.00	x	30.85	x	1.1320	=	523.83		
			LOTO of existing circuits									
180	26 05 19 16 0402	MLF	#12 AWG, 3 Conductors, 600 Volt, Type NM, Copper, Non-Metallic Sheathed Cable									$12,214.42
				Quantity		Unit Price		Factor		Total		
			Installation	4.00	x	2,697.53	x	1.1320	=	12,214.42		
			for new electrical runs per plans									
181	26 05 19 16 0402	0377	For Installation In Wood Stud Wall (Includes Drilling), Add									$1,272.82
				Quantity		Unit Price		Factor		Total		
			Installation	4.00	x	281.10	x	1.1320	=	1,272.82		
182	26 09 23 00 0109	EA	Wall Switch Replacement Occupancy Sensor, Single GangIncludes integral occupancy sensor and relay.									$1,204.00
				Quantity		Unit Price		Factor		Total		
			Installation	10.00	x	106.36	x	1.1320	=	1,204.00		
			per plans									
183	26 09 23 00 0235	EA	Passive Infrared, Wall Switch Mounted, Wired Occupancy Sensor (Encelium PW-100-24)Excludes GB II cable.									$586.31
				Quantity		Unit Price		Factor		Total		
			Installation	2.00	x	258.97	x	1.1320	=	586.31		
			for bathrooms									
184	26 24 13 00 0213	EA	800 Amperes, 480 Volt, 4 Wire, Switchboard Incoming No Switch Circuit									$5,781.11
				Quantity		Unit Price		Factor		Total		
			Installation	1.00	x	4,332.49	x	1.1320	=	4,904.38		
			Demolition	1.00	x	774.50	x	1.1320	=	876.73		
			for new main panel to new units subpanels									
185	26 24 16 00 0470	EA	200 Ampere Rating, Main Breaker, Indoor, 42 Circuit, 4 Wire, 120/208 Volt, Assembled Panelboard With 20 Ampere, 1 Pole Plug-In Breakers									$7,931.90
				Quantity		Unit Price		Factor		Total		
			Installation	2.00	x	3,075.97	x	1.1320	=	6,964.00		
			Demolition	1.00	x	855.04	x	1.1320	=	967.91		
			1 new sub panel for each unit									
186	26 27 13 00 0125	EA	Single Phase M-90 Meter, Socket, NEMA 3R Enclosure									$6,442.28
				Quantity		Unit Price		Factor		Total		
			Installation	6.00	x	905.76	x	1.1320	=	6,151.92		
			Demolition	5.00	x	51.30	x	1.1320	=	290.36		
			installation of new meters for building									
187	26 27 26 00 0009	EA	20 Amperes, 1 Gang, GFI, Duplex Receptacle Assembly									$3,825.42
				Quantity		Unit Price		Factor		Total		
			Installation	30.00	x	96.40	x	1.1320	=	3,273.74		
			Demolition	15.00	x	32.49	x	1.1320	=	551.68		
			All new GFI outlets throughout per clients request									

Contractor's Price Proposal - Detail Continues..

Work Order Number: 116757.00
Work Order Title: Fashion Park Unit 251 Conversion

Section - 26

188	26 27 26 00 0125		EA	20 Amperes, 125 Volt Single Specification Grade Tamper Resistant ReceptaclePass & Seymour TR5351.									$1,944.32
					Quantity		Unit Price		Factor		Total		
				Installation	40.00	x	34.39	x	1.1320	=	1,557.18		
				Demolition	40.00	x	8.55	x	1.1320	=	387.14		
				all new outlets throughout per clients request									
189	26 27 26 00 0138		EA	1 Gang, 20 Amperes, 120/277 Volt, SPST, Switch Assembly									$3,327.23
					Quantity		Unit Price		Factor		Total		
				Installation	25.00	x	85.08	x	1.1320	=	2,407.76		
				Demolition	25.00	x	32.49	x	1.1320	=	919.47		
				25 switches total in both units									
190	26 51 19 00 0312		EA	8" Diameter, 1,200 Lumens, Recessed LED Downlight With Open Trim (Lithonia DOM8 LED)									$7,780.09
					Quantity		Unit Price		Factor		Total		
				Installation	19.00	x	324.11	x	1.1320	=	6,970.96		
				Demolition	19.00	x	37.62	x	1.1320	=	809.13		
				19 new slim LED lights per plans and owners request									
191	26 51 19 00 0312	0543	EA	For Dimming Driver And Sensor Switch nLight Dimming Relay, Add									$1,339.77
					Quantity		Unit Price		Factor		Total		
				Installation	17.00	x	69.62	x	1.1320	=	1,339.77		
192	26 51 19 00 0430		EA	5" Shallow, Insulated Ceiling, Air-Tite New Construction (Cooper Halo H25ICAT)									$314.84
					Quantity		Unit Price		Factor		Total		
				Installation	3.00	x	92.71	x	1.1320	=	314.84		
				3 new 5" slim LED lights per plans									
193	26 51 19 00 0470		EA	2-1/2" Diameter x 15-1/2" High, Polished Nickel, LED Wall Sconce (Hudson Valley Lighting SHAW 1200-PN)									$1,017.22
					Quantity		Unit Price		Factor		Total		
				Installation	2.00	x	415.10	x	1.1320	=	939.79		
				Demolition	2.00	x	34.20	x	1.1320	=	77.43		
				2 new wall sconces per plans in bathrooms									
194	26 56 19 00 0031		EA	9,503 Lumens, 77 Watt, 3 LEDs, Wall Mounted Security Fixture (Jarvis Corp WMFT-350)									$1,530.14
					Quantity		Unit Price		Factor		Total		
				Installation	3.00	x	388.10	x	1.1320	=	1,317.99		
				Demolition	3.00	x	62.47	x	1.1320	=	212.15		
				replace 3 existing exterior lights per clients request									

Subtotal for Section - 26 **$57,035.70**

Section - 31

195	31 05 16 00 0002		CY	#2 Stone Aggregate Fill (1-1/2" To 2-1/2" Clean)									$1,295.01
					Quantity		Unit Price		Factor		Total		
				Installation	25.00	x	45.76	x	1.1320	=	1,295.01		
				4" deep, 200 LF, 2' wide base for backfill for trenching. 20 CY for footings, and slabs									
196	31 05 16 00 0002	0053		For Up To 8, Add									$51.79
					Quantity		Unit Price		Factor		Total		
				Installation	5.00	x	9.15	x	1.1320	=	51.79		
197	31 11 00 00 0008		ACR	Clearing By Machine - Light Brush Without Grub									$174.72
					Quantity		Unit Price		Factor		Total		
				Installation	0.50	x	308.69	x	1.1320	=	174.72		
				clear out weeds in back yard									

Contractor's Price Proposal - Detail Continues..

Work Order Number: 116757.00
Work Order Title: Fashion Park Unit 251 Conversion

Section - 31

198	31 11 00 00 0017	CY	Hand Loading Of Cleared And Grubbed Material									$849.91
				Quantity		Unit Price		Factor		Total		
			Installation	20.00	x	37.54	x	1.1320	=	849.91		
			clear out weeds in back yard									
199	31 23 16 13 0007	CY	Excavation For Trenching By Hand In SoilIncludes stockpiling excess materials and trimming sides and bottom of trench.									$3,505.24
				Quantity		Unit Price		Factor		Total		
			Installation	25.00	x	123.86	x	1.1320	=	3,505.24		
			20" deep, 200 LF, 2' wide									
200	31 23 16 13 0011	CY	Backfilling or Placing Subbase for Trenches with Imported or Stockpiled Materials by Hand									$973.80
				Quantity		Unit Price		Factor		Total		
			Installation	25.00	x	34.41	x	1.1320	=	973.80		
			20" deep, 200 LF, 2' wide									
201	31 23 16 13 0014	CY	Compaction of Fill or Subbase for Trenches by Hand									$1,098.61
				Quantity		Unit Price		Factor		Total		
			Installation	25.00	x	38.82	x	1.1320	=	1,098.61		
			20" deep, 200 LF, 2' wide									
202	31 23 16 36 0009	CY	Excavation For Building Foundations And Other Structures By Hand in Soil									$6,309.43
				Quantity		Unit Price		Factor		Total		
			Installation	45.00	x	123.86	x	1.1320	=	6,309.43		
			for footings and slab									
203	31 23 16 36 0019	CY	Backfilling Around Building Foundations And Other Structures By Hand									$1,335.53
				Quantity		Unit Price		Factor		Total		
			Installation	20.00	x	58.99	x	1.1320	=	1,335.53		
			for footings and slab									
204	31 23 16 36 0022	CY	Compaction Of Fill Or Subbase For Building Foundations and Other Structures by Hand									$1,976.98
				Quantity		Unit Price		Factor		Total		
			Installation	45.00	x	38.81	x	1.1320	=	1,976.98		
			for footings and slab									

Subtotal for Section - 31 **$17,571.02**

Section - 32

205	32 16 13 13 0016	LF	6" x 12" Cast In Place Concrete Gutter With 6" Curb And Face - Straight									$609.07
				Quantity		Unit Price		Factor		Total		
			Installation	15.00	x	24.92	x	1.1320	=	423.14		
			Demolition	15.00	x	10.95	x	1.1320	=	185.93		
			for parking lot ADA modifications									
206	32 16 23 00 0002	SF	4" Cast In Place Concrete Sidewalk									$586.15
				Quantity		Unit Price		Factor		Total		
			Installation	60.00	x	8.63	x	1.1320	=	586.15		
			for parking lot ADA modifications									
207	32 16 23 00 0002 0094		For Up To 100, Add									$248.59
				Quantity		Unit Price		Factor		Total		
			Installation	60.00	x	3.66	x	1.1320	=	248.59		
208	32 16 23 00 0008	EA	Finish Concrete Handicap Drop Section In SidewalkExcludes patterned (tactile) finish.									$145.65
				Quantity		Unit Price		Factor		Total		
			Installation	1.00	x	128.67	x	1.1320	=	145.65		
			for parking lot ADA modifications									

Contractor's Price Proposal - Detail Continues..

Work Order Number: 116757.00
Work Order Title: Fashion Park Unit 251 Conversion

Section - 32

209	32 17 23 13 0074	SF	Solid Area, Painted Pavement Marking For Parking AreasUse task for lines >12" wide, stop bars, transverse lines, diagonal lines, crossing lanes, etc.									$281.82
				Quantity		Unit Price		Factor		Total		
			Installation	64.00	x	3.89	x	1.1320	=	281.82		
			for parking lot ADA modifications									
210	32 17 23 13 0088	EA	Handicap Symbol For Van Parking Stalls, Painted Pavement Marking For Parking AreasApproximate overall dimensions: 4-1/3' width x 5' height. White or blue symbol. Excludes striping.									$86.15
				Quantity		Unit Price		Factor		Total		
			Installation	2.00	x	38.05	x	1.1320	=	86.15		
			for parking lot ADA modifications									
211	32 17 26 00 0003	SF	Embedded, VPC Truncated Dome Detectable Warning SurfaceAlso raised strips or directional bars. All colors.									$832.25
				Quantity		Unit Price		Factor		Total		
			Installation	16.00	x	45.95	x	1.1320	=	832.25		
			new truncated domes per A-501									
212	32 31 23 00 0006	LF	6' High Privacy Tongue And Groove Vinyl Fence									$3,593.82
				Quantity		Unit Price		Factor		Total		
			Installation	45.00	x	63.16	x	1.1320	=	3,217.37		
			Demolition	45.00	x	7.39	x	1.1320	=	376.45		
			removal of existing vinyl fence and installation of new due to ADA width requirements . includes a 4' wide ADA gate									
213	32 31 23 00 0051	EA	6' High x 4' Wide Vinyl Gate For Privacy Or Semi-Privacy Fence And Hinge Set									$757.38
				Quantity		Unit Price		Factor		Total		
			Installation	1.00	x	611.32	x	1.1320	=	692.01		
			Demolition	1.00	x	57.74	x	1.1320	=	65.36		
			removal of existing vinyl fence and installation of new due to ADA width requirements . includes a 4' wide ADA gate									
214	32 31 23 00 0078	EA	Stainless Steel Latch Set									$124.46
				Quantity		Unit Price		Factor		Total		
			Installation	1.00	x	109.95	x	1.1320	=	124.46		
			removal of existing vinyl fence and installation of new due to ADA width requirements . includes a 4' wide ADA gate									

Subtotal for Section - 32 **$7,265.34**

Proposal Total **$610,749.96**

This total represents the correct total for the proposal. Any discrepancy between line totals, sub-totals and the proposal total is due to rounding.

The Percentage of NPP on this Proposal: **%**

GORDIAN®

Subcontractor Listing

Date: June 06, 2023

Re:

IQC Master Contract #:	CA-R7-GB06-123021-MDJ
Work Order #:	116757.00
Owner PO #:	
Title:	Fashion Park Unit 251 Conversion
Contractor:	MDJ Management
Proposal Value:	$610,749.96

Name of Contractor	Duties	Amount	%
Janus Corporation		$100,000.00	16.37
Refined Construction		$450,000.00	73.68

EXHIBIT A

GORDIAN®

Work Order Signature Document

EZIQC Contract No.: CA-R7-GB06-123021-MDJ

[X] **New Work Order** [ ] **Modify an Existing Work Order**

Work Order Number.:	116758.00	Work Order Date:	06/06/2023
Work Order Title:	Fashion Park Unit 257 Conversion		
Owner Name:	Oxnard Housing Authority	Contractor Name:	MDJ Management
Contact:	Fredi Contreras	Contact:	Matt McMillon
Phone:	805-890-8319	Phone:	310-490-1521

Work to be Performed

Work to be performed as per the Final Detailed Scope of Work Attached and as per the terms and conditions of Sourcewell EZIQC Contract No CA-R7-GB06-123021-MDJ.

Brief Work Order Description:

Time of Performance Estimated Start Date:

Estimated Completion Date:

Liquidated Damages Will apply: [ ] Will not apply: [X]

Work Order Firm Fixed Price: $610,749.96

Owner Purchase Order Number:

Approvals

Oxnard Housing Authority Date

Concord Unit 2950 Conversion Date

Detailed Scope of Work

To: Matt McMillon
MDJ Management
531 Main St #611
El Segundo, CA 90245
310-490-1521

From: Fredi Contreras
Oxnard Housing Authority
300 N. Marquita Street
Oxnard, CA 93030
805-890-8319

Date Printed: June 06, 2023

Work Order Number: 116758.00

Work Order Title: Fashion Park Unit 257 Conversion

Brief Scope:

☐ **Preliminary** ☐ **Revised** ☒ **Final**

The following items detail the scope of work as discussed at the site. All requirements necessary to accomplish the items set forth below shall be considered part of this scope of work.

See attached

Subject to the terms and conditions of ezIQC Contract **CA-R7-GB06-123021-MDJ**.

Concord Unit 2950 Conversion _____ Date _____

Oxnard Housing Authority _____ Date _____

MDJ Management, LLC
License # 1044711
DIR # 1000061313
531 Main St. #611 El Segundo CA 90245
310-490-1521

Job Name: 257 Fashion Park ADA Conversion
Location: 257 Fashion Park Oxnard, CA 93036
Customer: Oxnard Housing Authority

Submission Date: 5/31/23

Detailed Scope of Work

Demolition

- Demolition of existing apartment per plans
- Per Asbestos Survey report provided by client all walls, ceilings and floors to be considered ACM
    - Demolition of unit to be performed by certified hazardous material demolition company

Installation/Buildout

- Saw cutting of slab and demolition of concrete for new plumbing
- Excavation for new plumbing and new concrete footings for addition
- All framing throughout including new walls and soffits
- New rough and finish plumbing throughout
- New electrical rough including new panel per plan
- Concrete work:
    - Pour new footings for addition
    - Pour back all open trenches inside the unit
    - Pour slab for addition
    - Our sidewalk as required
- New windows and doors
- New Insulation
- HVAC ductwork, registers, and wall heaters.
    - Includes new forced air unit
- Drywall throughout
- Lath, stucco, and color coat to match existing
- Roofing, fascia, and gutters for new addition
- Interior paint
- New Flooring and base
- New kitchens, countertops, fixtures, sinks and appliances.

- New bathroom fixtures per plan
- Paint exterior of building
- Site work:
    - New sidewalks
    - Handicap ramp with truncated domes
    - Handicap striping
    - New signage at Handicap stall

Installation/Buildout added by Client NOT included on plans

- Remove and replace all outlets and switches throughout, even on all existing walls
- Remove and replace exterior lighting with LED lighting
    - Match existing 3 fixtures
- Install MDF baseboards
    - Instead of called out cove base
- Remove and replace all interior doors. Complete list of doors from plans as well as clients request:
    - Demo of 3 utility closet, 2 sliding closet, 5 bedroom, and 2 bathroom doors
    - Installation of 2 utility closet, 3 sliding closet, 3 bedroom, 2 bathroom doors, and 1 front door
- Clean up existing back yard, the weeds are 5 feet high
    - Includes weed weed whacking and removal of all dead weeds
- Remove and replace one section of vinyl fence because it is not wide enough for ADA width along concrete path to front door
    - 45 feet x 6 feet high
    - (1) One 4' Gate
    - Includes widening the concrete by one foot

Notes:

- All work to be performed per plans provided to MDJ
- Any additional add on items will be at the request of Customer. Any adjustment shall be an additional cost.
- Price includes all labor (**Normal Working Hours - Davis Bacon Wages**), materials, equipment to complete this scope of work.
- Construction Exclusions:
    - New Washer and Dryer not included in contract.

CLARIFICATIONS AND EXCLUSIONS:

- Warranty
    - One year warranty against workmanship
    - Manufacturer's warranty varies
- We exclude plans, permits, permit fees, related fees, testing, inspection, survey, and engineering unless specified above
- We exclude utilities and hazardous or contaminated material.
- Construction water, power, and sanitary facilities available on site for MDJ's use at no cost.
- We exclude premium time.
- We exclude anything not specifically mentioned above.
- MDJ reserves the right to review, change, and/or delete any provisions of any prime contract or subcontract, which results from this quotation.

- All terms to be net 30 days in full upon receipt of invoice. Interest will be charged at the rate of 2% monthly on the unpaid balance.

BID PRICE: See Price Proposal

All work to be completed in a substantial and workmanlike manner according to standard practices for the sum of **See Price Proposal.** Any additional add on items will be at the request of Customer. Any adjustment shall be an additional cost.

Bid price is good for thirty (30) days only.

Any controversy or claim based on, arising out of, or relating to this agreement, or breach thereof, including any claim based on the work performed pursuant to this agreement, shall be submitted to the American Arbitration Association for binding arbitration in accordance with its rules. If any arbitration, legal action is brought to enforce this agreement, or arising out of or relating to the agreement, the prevailing party shall be entitled to recover from the non-prevailing party reasonable attorney fees and costs incurred, in addition to any and all other relief to which that party may be entitled.

Submitted by:

Matthew McMillon
President MDJ
310.490.1521
matt@buildwithmdj.com

Contractor's Price Proposal - Summary

Date: June 06, 2023

Re:

IQC Master Contract #:	CA-R7-GB06-123021-MDJ
Work Order #:	116758.00
Owner PO #:	
Title:	Fashion Park Unit 257 Conversion
Contractor:	MDJ Management
Proposal Value:	$610,749.96

Section - 01	**$27,922.15**
Section - 02	**$124,779.67**
Section - 03	**$44,628.54**
Section - 06	**$30,807.26**
Section - 07	**$39,946.76**
Section - 08	**$16,937.65**
Section - 09	**$136,489.60**
Section - 10	**$1,650.96**
Section - 11	**$6,131.21**
Section - 12	**$7,227.87**
Section - 22	**$61,651.38**
Section - 23	**$30,704.85**
Section - 26	**$57,035.70**
Section - 31	**$17,571.02**
Section - 32	**$7,265.34**
Proposal Total	**$610,749.96**

Thisl total represents the correct total for the proposal. Any discrepancy between line totals, sub-totals and the proposal total is due to rounding.

The Percentage of NPP on this Proposal: %

Contractor's Price Proposal - Detail

Date: June 06, 2023

Re:

IQC Master Contract #:	CA-R7-GB06-123021-MDJ
Work Order #:	116758.00
Owner PO #:	
Title:	Fashion Park Unit 257 Conversion
Contractor:	MDJ Management
Proposal Value:	$610,749.96

	Sect.	Item	Mod.	UOM	Description	Line Total
Labor	Equip.	Material	(Excludes)			

Section - 01

1	01 22 16	00 0002		EA	Reimbursable FeesReimbursable Fees will be paid to the contractor for eligible costs as directed by Owner. Insert the appropriate quantity to adjust the base cost to the actual Reimbursable Fee. If there are multiple Reimbursable Fees, list each one separately and add a comment in the "note" block to identify the Reimbursable Fee (e.g. sidewalk closure, road cut, various permits, extended warranty, expedited shipping costs, etc.). A copy of each receipt shall be submitted with the Price Proposal.	$13,147.20

	Quantity		Unit Price		Factor		Total
Installation	11,952.00	x	1.00	x	1.1000	=	13,147.20

Bond = $597,602 x 2%

2	01 74 19	00 0016		EA	40 CY Dumpster (5 Ton) "Construction Debris"Includes delivery of dumpster, rental cost, pick-up cost, hauling, and disposal fee. Non-hazardous material.	$11,002.63

	Quantity		Unit Price		Factor		Total
Installation	12.00	x	809.97	x	1.1320	=	11,002.63

10 dumpsters for abatement debris: cabinets, drywall from entire house, shower, toilet, stucco, insulation, ...
2 dumpsters for construction debris: drywall cuts, lumber cuts, basic trash

3	01 74 19	00 0019		EA	15 CY Low-Boy Dumpster Mixed RecyclableFor mixed dirt, rock, concrete brick or asphalt with no trash or organics. Includes service to deliver and pick-up dumpster, hauling, rental and disposal fee.	$3,772.32

	Quantity		Unit Price		Factor		Total
Installation	4.00	x	833.11	x	1.1320	=	3,772.32

for removal of excavated soil for footings, slab, trenching

Subtotal for Section - 01 **$27,922.15**

Section - 02

4	02 41 19	13 0063		LF	Rod Reinforced Concrete Slab Up To 4" Depth, Saw Cut	$2,499.46

	Quantity		Unit Price		Factor		Total
Installation	400.00	x	5.52	x	1.1320	=	2,499.46

sawcut existing slab to trench for new electrical and plumbing runs as needed per plans

5	02 82 33	00 0067		SF	>2,500 To 10,000 SF, Single Layer Gypsum Wall Board, Asbestos Abatement And Disposal	$62,951.52

	Quantity		Unit Price		Factor		Total
Installation	6,684.00	x	8.32	x	1.1320	=	62,951.52

demolition throughout. All drywall mud is hot. ceilings and walls

6	02 82 33	00 0074		SF	>500 To 2,500 SF, Gypsum Wall Board (Or Backer Board) With Ceramic Tile And Mastic, Asbestos Abatement And Disposal	$12,439.55

	Quantity		Unit Price		Factor		Total
Installation	550.00	x	19.98	x	1.1320	=	12,439.55

demolition of bathrooms tile and backer board walls and floor as well as kitchen tile

7	02 82 33	00 0087		SF	>500 To 2,500 SF, Spray On Acoustical Ceiling, Asbestos Abatement And Disposal	$16,659.92

	Quantity		Unit Price		Factor		Total
Installation	1,564.00	x	9.41	x	1.1320	=	16,659.92

demolition

Contractor's Price Proposal - Detail Continues..

Work Order Number: 116758.00
Work Order Title: Fashion Park Unit 257 Conversion

Section - 02

8	02 82 33 00 0101		SF	>500 To 2,500 SF, Single Layer Or First Of Multiple Layers, Floor Tile, Asbestos Abatement And Disposal									$10,959.07
			Installation	Quantity 1,564.00	x	Unit Price 6.19	x	Factor 1.1320	=	Total 10,959.07			
			demolition of 2 layers of floor tile										
9	02 82 33 00 0101	0001		For Each Additional Layer, Add									$2,744.19
			Installation	Quantity 1,564.00	x	Unit Price 1.55	x	Factor 1.1320	=	Total 2,744.19			
10	02 82 33 00 0245		CF	>100 To 250 CF, Asbestos Contaminated Debris, Asbestos Abatement And Disposal									$13,881.15
			Installation	Quantity 250.00	x	Unit Price 49.05	x	Factor 1.1320	=	Total 13,881.15			
			demolition of all cabinets and vanities per plans. They are attached to the walls so removal would disturb drywall material that is hot. This is for kitchen and bathroom										
11	02 82 33 00 0333		SF	High Efficiency Particulate Air (HEPA) Vacuum And Cleaning Of Contaminated Area									$1,186.20
			Installation	Quantity 1,564.00	x	Unit Price 0.67	x	Factor 1.1320	=	Total 1,186.20			
			demolition part of abatement procedures										
12	02 89 00 00 0021		EA	3 Stage Portable Personnel Decontamination Wash FacilityIncludes connection to negative air system.									$907.07
			Installation	Quantity 1.00	x	Unit Price 801.30	x	Factor 1.1320	=	Total 907.07			
			demolition part of abatement procedures										
13	02 89 00 00 0023		EA	Portable Waste Decontamination UnitIncludes connection to negative air system.									$551.54
			Installation	Quantity 1.00	x	Unit Price 487.23	x	Factor 1.1320	=	Total 551.54			
			demolition										

Subtotal for Section - 02 **$124,779.67**

Section - 03

14	03 11 13 00 0003		SF	Continuous Footings Foundation Wood Formwork									$1,882.74
			Installation	Quantity 240.00	x	Unit Price 6.93	x	Factor 1.1320	=	Total 1,882.74			
			footing for new addition										
15	03 11 13 00 0003	0001		For <1,000, Add									$350.47
			Installation	Quantity 240.00	x	Unit Price 1.29	x	Factor 1.1320	=	Total 350.47			
16	03 11 13 00 0009		LF	Up To 6" High Slab Edge and Block-Out Wood Formwork									$699.89
			Installation	Quantity 116.00	x	Unit Price 5.33	x	Factor 1.1320	=	Total 699.89			
			for new addition										
17	03 11 13 00 0009	0004		For Up To 250, Add									$69.28
			Installation	Quantity 60.00	x	Unit Price 1.02	x	Factor 1.1320	=	Total 69.28			
18	03 21 11 00 0251		EA	Dowels Or Hairpin, 1/2" x 30" Length, Drilled And Epoxy In Concrete, 6" Embedment									$5,682.36
			Installation	Quantity 225.00	x	Unit Price 22.31	x	Factor 1.1320	=	Total 5,682.36			
			200 LF of trenching. Epoxy and Dowel every 2'. One on each side. For reinforcement and tying into existing slab adjacent. 25 dowels to attach from porch sidewalk to existing .										

Contractor's Price Proposal - Detail Continues..

Work Order Number: 116758.00
Work Order Title: Fashion Park Unit 257 Conversion

Section - 03

19	03 21 13 00 0093		LF	#6, Grade 50, Slab On Grade, Galvanized Steel Reinforcement Bar								$2,010.43
					Quantity		Unit Price		Factor		Total	
				Installation	800.00	x	2.22	x	1.1320	=	2,010.43	
				200 LF of trenching and 600 LF for slab, porch, and footings. Installation of rebar every 2'.								
20	03 30 53 00 0007		CF	Hand Mix And Place ConcreteFor use where conventional equipment access is limited or when directed by the owner.								$6,592.77
					Quantity		Unit Price		Factor		Total	
				Installation	200.00	x	29.12	x	1.1320	=	6,592.77	
				patch back trenching in existing slab								
21	03 31 13 00 0003		SF	4" 3,000 PSI Slab On Grade Concrete Slabs Assembly								$1,768.18
					Quantity		Unit Price		Factor		Total	
				Installation	200.00	x	7.81	x	1.1320	=	1,768.18	
				for new addition								
22	03 31 13 00 0003	0156		For Up To 500, Add								$681.46
					Quantity		Unit Price		Factor		Total	
				Installation	200.00	x	3.01	x	1.1320	=	681.46	
23	03 31 13 00 0023		CY	Concrete Pump, Place 3,000 PSI Concrete Spread FootingsExcludes pumping equipment.								$14,833.73
					Quantity		Unit Price		Factor		Total	
				Installation	50.00	x	262.08	x	1.1320	=	14,833.73	
				24 CY footing for new addition. 26 CY for Front porch/sloped walk								
24	03 31 13 00 0023	0040		For >20 To 50, Add								$638.45
					Quantity		Unit Price		Factor		Total	
				Installation	50.00	x	11.28	x	1.1320	=	638.45	
25	03 54 16 00 0005		SF	1/2" Thick Self Leveling Cementitious Underlayment For FloorsIncluding Surface Preparation								$9,418.78
					Quantity		Unit Price		Factor		Total	
				Installation	1,564.00	x	5.32	x	1.1320	=	9,418.78	
				self leveling of floors for prior to installation of new vinyl plank flooring								

Subtotal for Section - 03 **$44,628.54**

Section - 06

26	06 11 16 00 0061		SF	2" x 4" Wood Wall Framing At 16" On Center								$2,351.16
					Quantity		Unit Price		Factor		Total	
				Installation	950.00	x	1.58	x	1.1320	=	1,699.13	
				Demolition	800.00	x	0.72	x	1.1320	=	652.03	
				for new walls, new addition, and soffits. Couple walls require double stacked 2x4 staggered A-602								
27	06 11 16 00 0062		SF	2" x 6" Wood Wall Framing At 16" On Center								$616.94
					Quantity		Unit Price		Factor		Total	
				Installation	250.00	x	2.18	x	1.1320	=	616.94	
				2x6 wall per plans								
28	06 11 16 00 0062	0004		For >200 To 500, Add								$101.88
					Quantity		Unit Price		Factor		Total	
				Installation	250.00	x	0.36	x	1.1320	=	101.88	
29	06 11 16 00 0063		SF	2" x 8" Wood Wall Framing At 16" On Center								$263.53
					Quantity		Unit Price		Factor		Total	
				Installation	80.00	x	2.91	x	1.1320	=	263.53	
				2x8 wall per plans								

Contractor's Price Proposal - Detail Continues..

Work Order Number: 116758.00
Work Order Title: Fashion Park Unit 257 Conversion

Section - 06

30	06 11 16 00 0063	0003		For Up To 200, Add									$86.94
			Installation	Quantity 80.00	x	Unit Price 0.96	x	Factor 1.1320	=	Total 86.94			
31	06 11 16 00 0179		LF	2" x 4" Pressure Treated Lumber, For Roofing Nailers									$871.64
			Installation	Quantity 250.00	x	Unit Price 3.08	x	Factor 1.1320	=	Total 871.64			
			for roof framing										
32	06 11 16 00 0183		LF	2" x 4" Pressure Treated Lumber, For Roofing Sleepers									$464.12
			Installation	Quantity 250.00	x	Unit Price 1.64	x	Factor 1.1320	=	Total 464.12			
			for roof framing										
33	06 16 33 00 0006		SF	3/4" Thick CDX Plywood Roof DeckingApplied to wood rafters.									$690.52
			Installation	Quantity 250.00	x	Unit Price 2.44	x	Factor 1.1320	=	Total 690.52			
			for new addition roof										
34	06 16 33 00 0006	0040		For Tongue And Groove, Add									$19.81
			Installation	Quantity 250.00	x	Unit Price 0.07	x	Factor 1.1320	=	Total 19.81			
35	06 16 33 00 0012		SF	1/2" Interior BC Plywood Wall SheathingApplied to wall studs.									$1,036.91
			Installation	Quantity 400.00	x	Unit Price 2.29	x	Factor 1.1320	=	Total 1,036.91			
			for new addition per plans										
36	06 16 33 00 0012	0005		For Shear Wall Construction, Add									$135.84
			Installation	Quantity 400.00	x	Unit Price 0.30	x	Factor 1.1320	=	Total 135.84			
37	06 16 33 00 0012	0006		For Exterior CC Grade Plywood, Add									$54.34
			Installation	Quantity 400.00	x	Unit Price 0.12	x	Factor 1.1320	=	Total 54.34			
38	06 16 33 00 0020		SF	3/4" CD Grade Plywood Floor DeckingApplied to floor or joists.									$5,169.71
			Installation	Quantity 1,564.00	x	Unit Price 2.36	x	Factor 1.1320	=	Total 4,178.26			
			Demolition	1,564.00	x	0.56	x	1.1320	=	991.45			
			for new floor decking per plans FSI/A-602. plans require glue										
39	06 16 33 00 0020	0038		For Exterior Glue, Add									$1,593.40
			Installation	Quantity 15,640.00	x	Unit Price 0.09	x	Factor 1.1320	=	Total 1,593.40			
40	06 41 13 00 0225		EA	15" Wide, 35" High x 23-3/4" Deep, Single Drawer and Single Door, Solid Wood Face Frame, Thermofoil Door and Drawer Front, Base Cabinet									$736.43
			Installation	Quantity 2.00	x	Unit Price 325.28	x	Factor 1.1320	=	Total 736.43			
			demolition of 1 kitchen and installation of 2 new kitchen cabinets per plans										
41	06 41 13 00 0225	0126		For Solid Wood Drawers, Dovetail Joints And Full Extension Drawer Guides, Add									$231.72
			Installation	Quantity 2.00	x	Unit Price 102.35	x	Factor 1.1320	=	Total 231.72			
42	06 41 13 00 0225	0130		For All Plywood Box Construction, Add									$241.55
			Installation	Quantity 2.00	x	Unit Price 106.69	x	Factor 1.1320	=	Total 241.55			

Contractor's Price Proposal - Detail Continues..

Work Order Number: 116758.00
Work Order Title: Fashion Park Unit 257 Conversion

Section - 06

43	06 41 13 00 0226		EA	18" Wide, 35" High x 23-3/4" Deep, Single Drawer and Single Door, Solid Wood Face Frame, Thermofoil Door and Drawer Front, Base Cabinet									$770.08
			Installation	Quantity 2.00	x	Unit Price 340.14	x	Factor 1.1320	=	Total 770.08			
				demolition of 1 kitchen and installation of 2 new kitchen cabinets per plans									
44	06 41 13 00 0226	0126		For Solid Wood Drawers, Dovetail Joints And Full Extension Drawer Guides, Add									$231.72
			Installation	Quantity 2.00	x	Unit Price 102.35	x	Factor 1.1320	=	Total 231.72			
45	06 41 13 00 0226	0130		For All Plywood Box Construction, Add									$241.55
			Installation	Quantity 2.00	x	Unit Price 106.69	x	Factor 1.1320	=	Total 241.55			
46	06 41 13 00 0228		EA	24" Wide, 35" High x 23-3/4" Deep, Single Drawer and Single Door, Solid Wood Face Frame, Thermofoil Door and Drawer Front, Base Cabinet									$460.91
			Installation	Quantity 1.00	x	Unit Price 407.16	x	Factor 1.1320	=	Total 460.91			
				demolition of 1 kitchen and installation of 2 new kitchen cabinets per plans									
47	06 41 13 00 0228	0126		For Solid Wood Drawers, Dovetail Joints And Full Extension Drawer Guides, Add									$115.86
			Installation	Quantity 1.00	x	Unit Price 102.35	x	Factor 1.1320	=	Total 115.86			
48	06 41 13 00 0228	0130		For All Plywood Box Construction, Add									$120.77
			Installation	Quantity 1.00	x	Unit Price 106.69	x	Factor 1.1320	=	Total 120.77			
49	06 41 13 00 0231		EA	33" Wide, 35" High x 23-3/4" Deep, Single Drawer and Double Door, Solid Wood Face Frame, Thermofoil Door and Drawer Front, Base Cabinet									$1,098.81
			Installation	Quantity 2.00	x	Unit Price 485.34	x	Factor 1.1320	=	Total 1,098.81			
				demolition of 1 kitchen and installation of 2 new kitchen cabinets per plans									
50	06 41 13 00 0231	0126		For Solid Wood Drawers, Dovetail Joints And Full Extension Drawer Guides, Add									$231.72
			Installation	Quantity 2.00	x	Unit Price 102.35	x	Factor 1.1320	=	Total 231.72			
51	06 41 13 00 0231	0130		For All Plywood Box Construction, Add									$241.55
			Installation	Quantity 2.00	x	Unit Price 106.69	x	Factor 1.1320	=	Total 241.55			
52	06 41 13 00 0232		EA	36" Wide, 35" High x 23-3/4" Deep, Single Drawer and Double Door, Solid Wood Face Frame, Thermofoil Door and Drawer Front, Base Cabinet									$1,133.00
			Installation	Quantity 2.00	x	Unit Price 500.44	x	Factor 1.1320	=	Total 1,133.00			
				demolition of 1 kitchen and installation of 2 new kitchen cabinets per plans									
53	06 41 13 00 0232	0126		For Solid Wood Drawers, Dovetail Joints And Full Extension Drawer Guides, Add									$231.72
			Installation	Quantity 2.00	x	Unit Price 102.35	x	Factor 1.1320	=	Total 231.72			
54	06 41 13 00 0232	0130		For All Plywood Box Construction, Add									$241.55
			Installation	Quantity 2.00	x	Unit Price 106.69	x	Factor 1.1320	=	Total 241.55			
55	06 41 13 00 0248		EA	15" Wide, 35" High x 23-3/4" Deep, Four Drawer Base, Solid Wood Face Frame and Thermofoil Drawer Fronts, Base Cabinet									$881.74
			Installation	Quantity 2.00	x	Unit Price 389.46	x	Factor 1.1320	=	Total 881.74			
				demolition of 1 kitchen and installation of 2 new kitchen cabinets per plans									

Contractor's Price Proposal - Detail Continues..

Work Order Number: 116758.00
Work Order Title: Fashion Park Unit 257 Conversion

Section - 06

56	06 41 13 00 0248	0129		For Solid Wood Drawers, Dovetail Joints And Full Extension Drawer Guides, Add									$926.86
			Installation	Quantity		Unit Price		Factor		Total			
				2.00	x	409.39	x	1.1320	=	926.86			
57	06 41 13 00 0248	0130		For All Plywood Box Construction, Add									$241.55
			Installation	Quantity		Unit Price		Factor		Total			
				2.00	x	106.69	x	1.1320	=	241.55			
58	06 41 13 00 0258		EA	33" Wide, 12" High x 12" Deep, Double Door, Solid Wood Face Frame and Thermofoil Doors, Wall Cabinet									$331.44
			Installation	Quantity		Unit Price		Factor		Total			
				1.00	x	292.79	x	1.1320	=	331.44			
				demolition of 1 kitchen and installation of 2 new kitchen cabinets per plans									
59	06 41 13 00 0258	0131		For All Plywood Box Construction, Add									$64.81
			Installation	Quantity		Unit Price		Factor		Total			
				1.00	x	57.25	x	1.1320	=	64.81			
60	06 41 13 00 0259		EA	36" Wide, 12" High x 12" Deep, Double Door, Solid Wood Face Frame and Thermofoil Doors, Wall Cabinet									$365.34
			Installation	Quantity		Unit Price		Factor		Total			
				1.00	x	322.74	x	1.1320	=	365.34			
				demolition of 1 kitchen and installation of 2 new kitchen cabinets per plans									
61	06 41 13 00 0259	0131		For All Plywood Box Construction, Add									$64.81
			Installation	Quantity		Unit Price		Factor		Total			
				1.00	x	57.25	x	1.1320	=	64.81			
62	06 41 13 00 0278		EA	30" Wide, 18" High x 12" Deep, Double Doors, Solid Wood Face Frame and Thermofoil Doors, Wall Cabinet									$722.69
			Installation	Quantity		Unit Price		Factor		Total			
				2.00	x	319.21	x	1.1320	=	722.69			
				demolition of 1 kitchen and installation of 2 new kitchen cabinets per plans									
63	06 41 13 00 0278	0131		For All Plywood Box Construction, Add									$129.61
			Installation	Quantity		Unit Price		Factor		Total			
				2.00	x	57.25	x	1.1320	=	129.61			
64	06 41 13 00 0282		EA	12" Wide, 30" High x 12" Deep, Single Door, Solid Wood Face Frame and Thermofoil Door, Wall Cabinet									$597.90
			Installation	Quantity		Unit Price		Factor		Total			
				2.00	x	264.09	x	1.1320	=	597.90			
				demolition of 1 kitchen and installation of 2 new kitchen cabinets per plans									
65	06 41 13 00 0282	0131		For All Plywood Box Construction, Add									$129.61
			Installation	Quantity		Unit Price		Factor		Total			
				2.00	x	57.25	x	1.1320	=	129.61			
66	06 41 13 00 0283		EA	15" Wide, 30" High x 12" Deep, Single Door, Solid Wood Face Frame and Thermofoil Door, Wall Cabinet									$325.62
			Installation	Quantity		Unit Price		Factor		Total			
				1.00	x	287.65	x	1.1320	=	325.62			
				demolition of 1 kitchen and installation of 2 new kitchen cabinets per plans									
67	06 41 13 00 0283	0131		For All Plywood Box Construction, Add									$64.81
			Installation	Quantity		Unit Price		Factor		Total			
				1.00	x	57.25	x	1.1320	=	64.81			
68	06 41 13 00 0283		EA	15" Wide, 30" High x 12" Deep, Single Door, Solid Wood Face Frame and Thermofoil Door, Wall Cabinet									$325.62
			Installation	Quantity		Unit Price		Factor		Total			
				1.00	x	287.65	x	1.1320	=	325.62			
				demolition of 1 kitchen and installation of 2 new kitchen cabinets per plans									

Contractor's Price Proposal - Detail Continues..

Work Order Number: 116758.00
Work Order Title: Fashion Park Unit 257 Conversion

Section - 06

69	06 41 13 00 0283	0131		For All Plywood Box Construction, Add								$64.81
			Installation	Quantity 1.00	x	Unit Price 57.25	x	Factor 1.1320	=	Total 64.81		
70	06 41 13 00 0284		EA	18" Wide, 30" High x 12" Deep, Single Door, Solid Wood Face Frame and Thermofoil Door, Wall Cabinet								$694.28
			Installation	Quantity 2.00	x	Unit Price 306.66	x	Factor 1.1320	=	Total 694.28		
				demolition of 1 kitchen and installation of 2 new kitchen cabinets per plans								
71	06 41 13 00 0284	0131		For All Plywood Box Construction, Add								$129.61
			Installation	Quantity 2.00	x	Unit Price 57.25	x	Factor 1.1320	=	Total 129.61		
72	06 41 13 00 0289		EA	33" Wide, 30" High x 12" Deep, Double Doors, Solid Wood Face Frame and Thermofoil Doors, Wall Cabinet								$974.72
			Installation	Quantity 2.00	x	Unit Price 430.53	x	Factor 1.1320	=	Total 974.72		
				demolition of 1 kitchen and installation of 2 new kitchen cabinets per plans								
73	06 41 13 00 0289	0131		For All Plywood Box Construction, Add								$129.61
			Installation	Quantity 2.00	x	Unit Price 57.25	x	Factor 1.1320	=	Total 129.61		
74	06 41 13 00 0329		EA	36" Wide, 84" High x 24" Deep, Four Doors, Solid Wood Face Frame and Thermofoil Doors, Pantry Cabinet								$1,462.41
			Installation	Quantity 1.00	x	Unit Price 1,291.88	x	Factor 1.1320	=	Total 1,462.41		
				demolition of 1 kitchen and installation of 2 new kitchen cabinets per plans								
75	06 41 13 00 0329	0132		For All Plywood Box Construction, Add								$239.58
			Installation	Quantity 1.00	x	Unit Price 211.64	x	Factor 1.1320	=	Total 239.58		
76	06 41 93 00 0007		EA	7" To 8-1/2", Flat Cabinet Pull Handle								$2,154.15
			Installation	Quantity 54.00	x	Unit Price 35.24	x	Factor 1.1320	=	Total 2,154.15		
				demolition of 1 kitchen and installation of 2 new kitchen cabinets per plans								

Subtotal for Section - 06 **$30,807.26**

Section - 07

77	07 21 16 00 0006		SF	5-1/2" Thick, Kraft Faced, R-21 Fiberglass Flexible Insulation								$19,505.18
			Installation	Quantity 8,284.00	x	Unit Price 1.72	x	Factor 1.1320	=	Total 16,129.28		
			Demolition	8,284.00	x	0.36	x	1.1320	=	3,375.90		
				removal of existing insulation and installation of new 6684 sqft of walls 1564 sqft of ceilings								
78	07 26 13 00 0010		CSF	Building Wrap (Tyvek)								$5,304.13
			Installation	Quantity 87.50	x	Unit Price 53.55	x	Factor 1.1320	=	Total 5,304.13		
				for new addition								
79	07 31 13 13 0004		SQ	230 LB/SQ, 5" Exposure, Three Tab Fiberglass Reinforced, Asphalt Composition Shingle (CertainTeed XT 30)								$7,409.79
			Installation	Quantity 25.00	x	Unit Price 261.83	x	Factor 1.1320	=	Total 7,409.79		
				new shingle roof for addition								

Contractor's Price Proposal - Detail Continues..

Work Order Number: 116758.00
Work Order Title: Fashion Park Unit 257 Conversion

Section - 07

80	07 34 00 00 0003		SQ	30 LB, Asphalt Saturated Organic Felt Roofing Underlayment, Mechanically Fastened								$1,416.70
			Installation	Quantity 25.00	x	Unit Price 50.06	x	Factor 1.1320	=	Total 1,416.70		
			new shingle roof for addition									
81	07 41 13 00 0026		LF	Eave Flashing For Aluminum Exposed Fastener Metal Roofing								$784.25
			Installation	Quantity 40.00	x	Unit Price 17.32	x	Factor 1.1320	=	Total 784.25		
			for new addition									
82	07 41 13 00 0026	0130		For Fluoropolymer (Kynar®) Coating, Add								$42.11
			Installation	Quantity 40.00	x	Unit Price 0.93	x	Factor 1.1320	=	Total 42.11		
83	07 62 13 00 0033		SF	22 Gauge, 0.034" Thick, Galvanized Steel Flashing								$4,149.91
			Installation	Quantity 300.00	x	Unit Price 12.22	x	Factor 1.1320	=	Total 4,149.91		
			flashing per plans for addition and 100 sqft for new windows									
84	07 62 13 00 0033	0080		For Wrap Around Window Panning, Add								$699.58
			Installation	Quantity 100.00	x	Unit Price 6.18	x	Factor 1.1320	=	Total 699.58		
85	07 71 23 00 0016		LF	6", 0.032" Thick, Box Style Aluminum Gutter								$429.88
			Installation	Quantity 25.00	x	Unit Price 15.19	x	Factor 1.1320	=	Total 429.88		
			rain gutter per plans									
86	07 71 23 00 0016	0322		For Up To 100', Add								$70.18
			Installation	Quantity 25.00	x	Unit Price 2.48	x	Factor 1.1320	=	Total 70.18		
87	07 71 23 00 0029		EA	6", Box Style Aluminum Gutter End Cap								$18.34
			Installation	Quantity 2.00	x	Unit Price 8.10	x	Factor 1.1320	=	Total 18.34		
			rain gutter per plans									
88	07 71 23 00 0055		LF	4" x 5", 0.019" Thick, Rectangular Aluminum Downspout								$102.67
			Installation	Quantity 10.00	x	Unit Price 9.07	x	Factor 1.1320	=	Total 102.67		
			rain gutter per plans									
89	07 71 23 00 0055	0325		For Up To 100', Add								$14.04
			Installation	Quantity 10.00	x	Unit Price 1.24	x	Factor 1.1320	=	Total 14.04		

Subtotal for Section - 07 **$39,946.76**

Section - 08

90	08 05 13 00 0041		EA	Factory Prepare Wood Door (Rated Or Non-Rated) For Mortise Lockset Hardware								$470.41
			Installation	Quantity 6.00	x	Unit Price 69.26	x	Factor 1.1320	=	Total 470.41		
			for all new doors. 1 front door, 2 bath, and 3 bedroom									

Contractor's Price Proposal - Detail Continues..

Work Order Number: 116758.00
Work Order Title: Fashion Park Unit 257 Conversion

Section - 08

91	08 14 16 00 0134	EA	3'-0" x 6'-8" x 1-3/4" Thick, 5 Ply, Hollow Core (HC), Birch Faced Wood Door									$2,910.85
				Quantity		Unit Price		Factor		Total		
			Installation	7.00	x	288.16	x	1.1320	=	2,283.38		
			Demolition	10.00	x	55.43	x	1.1320	=	627.47		
			Demo of 3 utility closet, 5 bedroom, and 2 bathroom doors. Installation of 2 utility closet, 3 bedroom, 2 bathroom doors.									
92	08 14 73 00 0074	EA	5' Wide, Two 2'-6" x 6'-8" x 1-3/8" Thick, Flush, Hollow Core (HC), Birch Faced Wood Bi-Pass Doors									$1,525.71
				Quantity		Unit Price		Factor		Total		
			Installation	3.00	x	396.94	x	1.1320	=	1,348.01		
			Demolition	2.00	x	78.49	x	1.1320	=	177.70		
			removal of 2 existing closet sliding doors, installation of 3 new closet sliding doors									
93	08 53 13 00 0549	EA	>110" To 120" UI, Horizontal Sliding Premium Vinyl Window (Pella 350)									$4,060.21
				Quantity		Unit Price		Factor		Total		
			Installation	5.00	x	631.42	x	1.1320	=	3,573.84		
			Demolition	6.00	x	71.61	x	1.1320	=	486.38		
			removal of 6 existing windows. Installation of 5 new windows per plans									
94	08 71 11 00 0004	PR	3-1/2" x 3-1/2" Standard Duty, Full Mortise, Plain Bearing, Brass/Bronze, Satin Chrome Finish Hinge									$652.61
				Quantity		Unit Price		Factor		Total		
			Installation	7.00	x	73.13	x	1.1320	=	579.48		
			Demolition	10.00	x	6.46	x	1.1320	=	73.13		
			Demo of 3 utility closet, 5 bedroom, and 2 bathroom doors. Installation of 2 utility closet, 3 bedroom, 2 bathroom doors.									
95	08 71 11 00 0005	PR	4" x 4" Standard Duty, Full Mortise, Plain Bearing, Brass/Bronze, Satin Chrome Finish Hinge									$136.35
				Quantity		Unit Price		Factor		Total		
			Installation	1.50	x	80.30	x	1.1320	=	136.35		
			for new front door per plans									
96	08 71 11 00 0513	EA	3" Projection, Residential Spring Type, Bright Brass Finish, Steel Wall Stop (Ives 63)									$130.43
				Quantity		Unit Price		Factor		Total		
			Installation	7.00	x	9.86	x	1.1320	=	78.13		
			Demolition	10.00	x	4.62	x	1.1320	=	52.30		
			per plans									
97	08 71 11 00 0655	EA	190 Degree Angle Of View, Bright Brass Finish, Brass One-Way Wide Angle Door Viewer (Ives U698)									$47.59
				Quantity		Unit Price		Factor		Total		
			Installation	1.00	x	42.04	x	1.1320	=	47.59		
			for new front door per plans									
98	08 71 11 00 2288	EA	Passage/Closet F01 Mortise LatchsetBoth sides always unlocked.									$1,471.62
				Quantity		Unit Price		Factor		Total		
			Installation	2.00	x	615.36	x	1.1320	=	1,393.18		
			Demolition	3.00	x	23.10	x	1.1320	=	78.45		
			Demo of 3 utility closet. Installation of 2 utility closet doors									
99	08 71 11 00 2289	EA	Bath/Bedroom Privacy F02/F19 Mortise LocksetLocked with thumb knob inside.									$4,323.67
				Quantity		Unit Price		Factor		Total		
			Installation	5.00	x	731.56	x	1.1320	=	4,140.63		
			Demolition	7.00	x	23.10	x	1.1320	=	183.04		
			Demo of 5 bedroom, and 2 bathroom doors. Installation of 3 bedroom, 2 bathroom doors.									

Contractor's Price Proposal - Detail Continues..

Work Order Number: 116758.00
Work Order Title: Fashion Park Unit 257 Conversion

Section - 08

100	08 71 11 00 2293		EA	Entrance F08 Mortise LocksetLocked with key outside and thumb knob inside.								$960.13
					Quantity		Unit Price		Factor		Total	
				Installation	1.00	x	848.17	x	1.1320	=	960.13	
				for new front door per plans								
101	08 71 11 00 2293	0263		For Satin Brass Clear Coat US4 (BHMA 606) Finish, Add								$42.78
					Quantity		Unit Price		Factor		Total	
				Installation	1.00	x	37.79	x	1.1320	=	42.78	
102	08 72 33 00 0155		LF	3/8" x 3/16", Silicon Compression Bulb, Adhesive Backed Perimeter Gasketing Weather-Strip (Pemko PK33)								$63.89
					Quantity		Unit Price		Factor		Total	
				Installation	17.00	x	3.32	x	1.1320	=	63.89	
				for new front door per plans								
103	08 72 43 00 0011		LF	6" Width, 1/4" Height, Aluminum Saddle Threshold (Pemko 272A)								$125.07
					Quantity		Unit Price		Factor		Total	
				Installation	3.00	x	36.83	x	1.1320	=	125.07	
				for new front door per plans								
104	08 72 43 00 0011	0458		For Color Anodized Finish, Add								$16.33
					Quantity		Unit Price		Factor		Total	
				Installation	3.00	x	4.81	x	1.1320	=	16.33	

Subtotal for Section - 08 **$16,937.65**

Section - 09

105	09 05 71 00 0002		SF	5 Mil Tile And Stone Acoustical Underlayment (EasyMat)								$6,391.32
					Quantity		Unit Price		Factor		Total	
				Installation	1,564.00	x	3.61	x	1.1320	=	6,391.32	
				acousthmat underlayment per plans FSI/A-602								
106	09 05 71 00 0005		SF	2 MM Thick Resilient Plank Floor Acoustical Underlayment (Floormuffler)								$2,637.97
					Quantity		Unit Price		Factor		Total	
				Installation	1,564.00	x	1.49	x	1.1320	=	2,637.97	
				closest LI to gypsum sanded floor underlayment per plans FSI/A-602								
107	09 22 13 23 0008		SF	25 Gauge, 16" On Center, Installed On Walls, Double-Leg Resilient Channel, RC2 Furring Channel								$2,604.73
					Quantity		Unit Price		Factor		Total	
				Installation	650.00	x	3.54	x	1.1320	=	2,604.73	
				Resilient channel per plans A-602								
108	09 22 13 23 0010		SF	25 Gauge, 16" On Center, Installed On Ceilings, Double-Leg Resilient Channel, RC2 Furring Channel								$7,418.18
					Quantity		Unit Price		Factor		Total	
				Installation	1,564.00	x	4.19	x	1.1320	=	7,418.18	
				Resilient channel per plans FSI/A-602								
109	09 22 36 23 0005		SF	3.4 LB/SY, Installed On Studs Or Furred Walls, Flat Diamond, Expanded Metal Lath								$3,022.16
					Quantity		Unit Price		Factor		Total	
				Installation	875.00	x	2.53	x	1.1320	=	2,505.97	
				Demolition	800.00	x	0.57	x	1.1320	=	516.19	
				removal of existing stucco and installation of new for new addition and new front entrance								

Work Order Number: 116758.00
Work Order Title: Fashion Park Unit 257 Conversion

Section - 09

110	09 24 23 00 0002		SF	Scratch/Brown/Finish, Three Coat Troweled StuccoExcludes lath and felt. Interior or exterior, one side.								$10,885.03
					Quantity		Unit Price		Factor		Total	
				Installation	875.00	x	8.53	x	1.1320	=	8,448.97	
				Demolition	800.00	x	2.69	x	1.1320	=	2,436.06	
				removal of existing stucco and installation of new for new addition and new front entrance								
111	09 24 23 00 0004		SF	Scratch/Finish, Two Coat Troweled StuccoExcludes lath and felt. Interior or exterior, one side.								$6,763.70
					Quantity		Unit Price		Factor		Total	
				Installation	875.00	x	5.64	x	1.1320	=	5,586.42	
				Demolition	800.00	x	1.30	x	1.1320	=	1,177.28	
				removal of existing stucco and installation of new for new addition and new front entrance								
112	09 24 23 00 0005		SF	Finish Coat Troweled StuccoExcludes lath and felt. Interior or exterior, one side.								$4,373.48
					Quantity		Unit Price		Factor		Total	
				Installation	875.00	x	3.62	x	1.1320	=	3,585.61	
				Demolition	800.00	x	0.87	x	1.1320	=	787.87	
				removal of existing stucco and installation of new for new addition and new front entrance								
113	09 29 10 00 0006		SF	5/8" Gypsum Board								$14,191.84
					Quantity		Unit Price		Factor		Total	
				Installation	8,248.00	x	1.52	x	1.1320	=	14,191.84	
				for walls and ceilings per plans								
114	09 29 10 00 0038		SF	Up To 10' High, Walls, Tape, Spackle And Finish Gypsum Board								$4,464.11
					Quantity		Unit Price		Factor		Total	
				Installation	6,684.00	x	0.59	x	1.1320	=	4,464.11	
				for walls								
115	09 29 10 00 0038	0048		For ASTM C840 Level 5 High Quality Finish, Add								$3,329.17
					Quantity		Unit Price		Factor		Total	
				Installation	6,684.00	x	0.44	x	1.1320	=	3,329.17	
116	09 29 10 00 0041		SF	Up To 10' High, Ceilings, Tape, Spackle And Finish Gypsum Board								$1,363.25
					Quantity		Unit Price		Factor		Total	
				Installation	1,564.00	x	0.77	x	1.1320	=	1,363.24	
				for ceilings								
117	09 29 10 00 0041	0048		For ASTM C840 Level 5 High Quality Finish, Add								$10,091.55
					Quantity		Unit Price		Factor		Total	
				Installation	15,640.00	x	0.57	x	1.1320	=	10,091.55	
118	09 29 10 00 0044		LF	Up To 10' High, Vertical Corners, Tape, Spackle And Finish Gypsum Board								$1,651.00
					Quantity		Unit Price		Factor		Total	
				Installation	1,236.00	x	1.18	x	1.1320	=	1,651.00	
				walls: 150 vertical corners @ 8' throughout both floors. windows: 36 LF of vertical corners								
119	09 29 10 00 0044	0048		For ASTM C840 Level 5 High Quality Finish, Add								$1,217.26
					Quantity		Unit Price		Factor		Total	
				Installation	1,236.00	x	0.87	x	1.1320	=	1,217.26	
120	09 29 10 00 0047		LF	Up To 10' High, Horizontal Corners, Tape, Spackle And Finish Gypsum Board								$1,209.66
					Quantity		Unit Price		Factor		Total	
				Installation	780.00	x	1.37	x	1.1320	=	1,209.66	
				750 LF of walls and 30 LF of windows								

Work Order Number: 116758.00
Work Order Title: Fashion Park Unit 257 Conversion

Section - 09

121	09 29 10 00 0047	0048		For ASTM C840 Level 5 High Quality Finish, Add								$891.79
			Installation	Quantity 780.00	x	Unit Price 1.01	x	Factor 1.1320	=	Total 891.79		
122	09 29 10 00 0051		LF	Corner Bead, Galvanized Steel For Gypsum Board								$7,508.15
			Installation	Quantity 2,016.00	x	Unit Price 3.29	x	Factor 1.1320	=	Total 7,508.15		
			walls: 150 vertical corners @ 8' throughout both floors. 750 LF of horizontal corners Windows: 86 LF									
123	09 65 13 13 0003		LF	4" High, 1/8" Thick, Type TV Thermoplastic Vinyl Wall Base, All Colors								$2,844.15
			Installation	Quantity 750.00	x	Unit Price 3.35	x	Factor 1.1320	=	Total 2,844.15		
			750 LF of walls									
124	09 65 23 00 0004		SF	0.16" Overall Thickness, 0.020" Wear Layer, Vinyl Plank Flooring (Armstrong® Luxe Plank™)								$16,907.78
			Installation	Quantity 1,564.00	x	Unit Price 9.55	x	Factor 1.1320	=	Total 16,907.78		
			new flooring throughout per plans									
125	09 91 13 00 0095		SF	1 Coat Primer, Brush/Roller Work, Paint Exterior Stucco Walls								$1,236.14
			Installation	Quantity 1,400.00	x	Unit Price 0.78	x	Factor 1.1320	=	Total 1,236.14		
			paint front and side of building for affected areas corner to corner									
126	09 91 13 00 0097		SF	2 Coats Paint, Brush/Roller Work, Paint Exterior Stucco Walls								$2,599.07
			Installation	Quantity 1,400.00	x	Unit Price 1.64	x	Factor 1.1320	=	Total 2,599.07		
			paint front and side of building for affected areas corner to corner									
127	09 91 23 00 0067		SF	1 Coat Primer, Brush/Roller Work, Paint Interior Plaster/Drywall Walls								$4,161.46
			Installation	Quantity 6,684.00	x	Unit Price 0.55	x	Factor 1.1320	=	Total 4,161.46		
			for walls									
128	09 91 23 00 0069		SF	2 Coats Paint, Brush/Roller Work, Paint Interior Plaster/Drywall Walls								$8,322.92
			Installation	Quantity 6,684.00	x	Unit Price 1.10	x	Factor 1.1320	=	Total 8,322.92		
			for walls									
129	09 91 23 00 0161		SF	1 Coat Primer, Brush/Roller Work, Paint Interior Drywall/Plaster Ceiling								$1,150.79
			Installation	Quantity 1,564.00	x	Unit Price 0.65	x	Factor 1.1320	=	Total 1,150.79		
			for ceilings									
130	09 91 23 00 0163		SF	2 Coats Paints, Brush/Roller Work, Paint Interior Drywall/Plaster Ceiling								$2,071.42
			Installation	Quantity 1,564.00	x	Unit Price 1.17	x	Factor 1.1320	=	Total 2,071.42		
			for ceilings									
131	09 91 23 00 0252		LF	1 Coat Primer, Brush/Roller Work, Paint Interior Wood Door Frame And Trim								$570.53
			Installation	Quantity 600.00	x	Unit Price 0.84	x	Factor 1.1320	=	Total 570.53		
			15 total doors. 40 LF of trim per door									
132	09 91 23 00 0254		LF	2 Coats Paint, Brush/Roller Work, Paint Interior Wood Door Frame And Trime								$1,249.73
			Installation	Quantity 600.00	x	Unit Price 1.84	x	Factor 1.1320	=	Total 1,249.73		
			15 total doors. 40 LF of trim per door									

Contractor's Price Proposal - Detail Continues..

Work Order Number: 116758.00
Work Order Title: Fashion Park Unit 257 Conversion

Section - 09

133	09 91 23 00 0275	EA	1 Coat Primer, Brush/Roller Work, Both Faces, Paint Interior Wood Door								$1,153.96
				Quantity		Unit Price		Factor		Total	
			Installation	15.00	x	67.96	x	1.1320	=	1,153.96	
			8 doors on first floor 7 doors on second floor								
134	09 91 23 00 0277	EA	2 Coats Paint, Brush/Roller Work, Both Faces, Paint Interior Wood Door								$2,072.58
				Quantity		Unit Price		Factor		Total	
			Installation	15.00	x	122.06	x	1.1320	=	2,072.58	
			8 doors on first floor 7 doors on second floor								
135	09 91 23 00 0307	LF	1 Coat Primer, Brush/Roller Work, Paint Interior Wood Window Frame And Trim								$163.73
				Quantity		Unit Price		Factor		Total	
			Installation	128.00	x	1.13	x	1.1320	=	163.73	
			8 windows with 128 LF of trim								
136	09 91 23 00 0309	LF	2 Coats Paint, Brush/Roller Work, Paint Interior Wood Window Frame And Trim								$357.89
				Quantity		Unit Price		Factor		Total	
			Installation	128.00	x	2.47	x	1.1320	=	357.89	
			8 windows with 128 LF of trim								
137	09 91 23 00 0350	LF	1 Coat Primer, Brush Work, Paint Interior Wood Trim To 6" Wide								$492.42
				Quantity		Unit Price		Factor		Total	
			Installation	750.00	x	0.58	x	1.1320	=	492.42	
			750 LF of baseboards								
138	09 91 23 00 0352	LF	2 Coats Paint, Paint Interior Wood Trim to 6" Wide								$1,120.68
				Quantity		Unit Price		Factor		Total	
			Installation	750.00	x	1.32	x	1.1320	=	1,120.68	
			750 LF of baseboards								

Subtotal for Section - 09 **$136,489.60**

Section - 10

139	10 28 13 13 0045	EA	Single Roll, Surface Mounted, Stainless Steel, Satin Finish, Toilet Tissue Dispenser (Bobrick B-6857)								$123.83
				Quantity		Unit Price		Factor		Total	
			Installation	1.00	x	88.61	x	1.1320	=	100.31	
			Demolition	1.00	x	20.78	x	1.1320	=	23.52	
			per plans								
140	10 28 13 13 0170	EA	36" Length, 1-1/2" Diameter, Stainless Steel Grab Bar (Bobrick B-6806x36)								$311.68
				Quantity		Unit Price		Factor		Total	
			Installation	3.00	x	91.78	x	1.1320	=	311.68	
			per plans								
141	10 28 13 13 0171	EA	42" Length, 1-1/2" Diameter, Stainless Steel Grab Bar (Bobrick B-6806x42)								$106.14
				Quantity		Unit Price		Factor		Total	
			Installation	1.00	x	93.76	x	1.1320	=	106.14	
			per plans								
142	10 28 13 13 0217	EA	Telescoping 60" To 72" Length, 20-Gauge, 1" Diameter, Stainless Steel Curved Shower Rod With Concealed Mounting (Kohler Expanse K-9349)								$158.19
				Quantity		Unit Price		Factor		Total	
			Installation	1.00	x	118.96	x	1.1320	=	134.66	
			Demolition	1.00	x	20.78	x	1.1320	=	23.52	
			per plans								

Contractor's Price Proposal - Detail Continues..

Work Order Number: 116758.00
Work Order Title: Fashion Park Unit 257 Conversion

Section - 10

143	10 28 13 13 0322	EA	24" Length, 3/4" Diameter, Stainless Steel Towel Bar (Bobrick B-674)								$133.36
				Quantity		Unit Price		Factor		Total	
			Installation	1.00	x	97.03	x	1.1320	=	109.84	
			Demolition	1.00	x	20.78	x	1.1320	=	23.52	
			per plans								
144	10 28 13 13 0390	EA	20" x 26", Surface Mounted, Aluminum Medicine Cabinet (Kohler K-CB)								$817.76
				Quantity		Unit Price		Factor		Total	
			Installation	1.00	x	676.23	x	1.1320	=	765.49	
			Demolition	1.00	x	46.17	x	1.1320	=	52.26	
			per plans								

Subtotal for Section - 10 **$1,650.96**

Section - 11

145	11 30 13 13 0010	EA	30" Gas Range With Oven								$2,325.17
				Quantity		Unit Price		Factor		Total	
			Installation	2.00	x	985.73	x	1.1320	=	2,231.69	
			Demolition	1.00	x	82.58	x	1.1320	=	93.48	
			remove and save existing for clients attic stock. Installation of 2 new.								
146	11 30 13 13 0015	EA	30" Venting Range Hood (Broan 40000)								$619.32
				Quantity		Unit Price		Factor		Total	
			Installation	2.00	x	242.58	x	1.1320	=	549.20	
			Demolition	1.00	x	61.94	x	1.1320	=	70.12	
			removal of existing and installation of 2 new								
147	11 30 13 13 0048	EA	>16 To 18 CF Top Freezer Refrigerator								$2,550.65
				Quantity		Unit Price		Factor		Total	
			Installation	2.00	x	1,105.96	x	1.1320	=	2,503.89	
			Demolition	1.00	x	41.30	x	1.1320	=	46.75	
			remove and save existing for clients attic stock. Installation of 2 new.								
148	11 30 13 13 0084	EA	1/3 HP Insulated Garbage Disposal (GE GFC320V)								$636.07
				Quantity		Unit Price		Factor		Total	
			Installation	2.00	x	249.98	x	1.1320	=	565.95	
			Demolition	1.00	x	61.94	x	1.1320	=	70.12	
			removal o existing and installation of new								

Subtotal for Section - 11 **$6,131.21**

Section - 12

149	12 36 61 19 0005	SF	1-1/4" Thick, Quartz Agglomerate Countertop With Backsplash								$6,914.26
				Quantity		Unit Price		Factor		Total	
			Installation	50.00	x	122.16	x	1.1320	=	6,914.26	
			25 LF of kitchen countertops								
150	12 36 61 19 0007	EA	Cutout For Sink And/Or Faucet In Quartz Agglomerate Countertop								$313.61
				Quantity		Unit Price		Factor		Total	
			Installation	2.00	x	138.52	x	1.1320	=	313.61	
			2 kitchen sinks								

Subtotal for Section - 12 **$7,227.87**

Section - 22

Work Order Number: 116758.00
Work Order Title: Fashion Park Unit 257 Conversion

Section - 22

151	22 01 40 81 0004	EA	Removal And Replacement Of Chrome Supply Lines To Sink/Lavatory, Pair								$297.60
				Quantity		Unit Price		Factor		Total	
			Installation	10.00	x	26.29	x	1.1320	=	297.60	
			replace supply lines in kitchens and bathrooms								
152	22 01 40 81 0006	EA	Removal And Replacement Of Double Bowl Sink/Lavatory Drain Line								$128.73
				Quantity		Unit Price		Factor		Total	
			Installation	2.00	x	56.86	x	1.1320	=	128.73	
			new drain lines								
153	22 11 16 00 0003	LF	3/4" Schedule 40 Threaded Galvanized Steel Pipe With 150 LB Malleable Iron Fitting AssemblyIncludes all hangers and all galvanized malleable iron fittings (couplings, elbows, tees and reducer fittings). All hangers are complete assemblies. Not for use where detail is available.								$7,127.07
				Quantity		Unit Price		Factor		Total	
			Installation	300.00	x	18.30	x	1.1320	=	6,214.68	
			Demolition	200.00	x	4.03	x	1.1320	=	912.39	
			gas line piping								
154	22 11 16 00 0901	LF	3/4" Inside Diameter Copper Pipe/Tubing Type L AssemblyIncludes all hangers and couplings, elbow, tee, reducer fittings. All hangers are complete assemblies. Not for use where detail is available.								$19,234.38
				Quantity		Unit Price		Factor		Total	
			Installation	650.00	x	24.17	x	1.1320	=	17,784.29	
			Demolition	350.00	x	3.66	x	1.1320	=	1,450.09	
			water line copper piping								
155	22 12 23 13 0002	EA	80 Gallon ASME Rated Tank, 150PSI, Jacketed, Insulated, Glass Lined Water Heater Storage Tank (TJ-80A)								$424.28
				Quantity		Unit Price		Factor		Total	
			Installation	0.00	x	2,141.02	x	1.1320	=	0.00	
			Demolition	1.00	x	374.81	x	1.1320	=	424.28	
			removal of existing water heater								
156	22 13 16 00 0509	LF	4" Schedule 40 Polyvinyl Chloride (PVC) DWV Pipe AssemblyIncludes all fittings, couplings and hangers. Fittings are assumed every 10'. Not for use where detail is available.								$20,147.62
				Quantity		Unit Price		Factor		Total	
			Installation	400.00	x	39.47	x	1.1320	=	17,872.02	
			Demolition	275.00	x	7.31	x	1.1320	=	2,275.60	
			Sewer and vent piping								
157	22 34 13 00 0011	EA	7.4 GPM, Outdoor Mount, Instantaneous, Tankless, Gas Domestic Water Heater (Rheem RTG-74XN)								$5,196.24
				Quantity		Unit Price		Factor		Total	
			Installation	2.00	x	2,295.16	x	1.1320	=	5,196.24	
			installation of 2 new water heaters								
158	22 41 16 16 0003	EA	33" x 21" x 6-1/2" Stainless Steel Kitchen Sink, Double Bowl, 20 Gauge (Elkay D233213)								$1,488.27
				Quantity		Unit Price		Factor		Total	
			Installation	2.00	x	607.23	x	1.1320	=	1,374.77	
			Demolition	1.00	x	100.27	x	1.1320	=	113.51	
			removal of existing and installation of new.								
159	22 41 39 00 0006	EA	Chrome Two Handle Kitchen Faucet With Spray, Three Hole Installation, 8" Center (Delta 2402LF-LHP+H215)								$454.33
				Quantity		Unit Price		Factor		Total	
			Installation	2.00	x	177.25	x	1.1320	=	401.29	
			Demolition	1.00	x	46.85	x	1.1320	=	53.03	
			removal of existing and installation of new.								

Contractor's Price Proposal - Detail Continues..

Work Order Number: 116758.00
Work Order Title: Fashion Park Unit 257 Conversion

Section - 22

160	22 42 13 13 0027	EA	2 Piece Tank Type, Pressure Assisted, Siphon Jet, Floor Mounted, Back Outlet, Handicap Accessible, Elongated Vitreous China Water Closet (American Standard Yorkville™ ADA)								$1,300.36
				Quantity		Unit Price		Factor		Total	
			Installation	1.00	x	1,051.28	x	1.1320	=	1,190.05	
			Demolition	1.00	x	97.45	x	1.1320	=	110.31	
			remove existing and install new ADA toilet								
161	22 42 16 13 0009	EA	27" x 20" Wheelchair Accessible, Vitreous China Wall Hung Lavatory (American Standard Wheel Chair Users)								$776.98
				Quantity		Unit Price		Factor		Total	
			Installation	1.00	x	623.60	x	1.1320	=	705.92	
			Demolition	1.00	x	62.78	x	1.1320	=	71.07	
			remove existing and install new ADA sink, faucet, and drain cover.								
162	22 42 19 00 0027	EA	3 Piece Tub/Shower Surrounds, 32" x 72" Side Walls, 48" x 72" Back, (Swanstone SK-324872)								$3,166.32
				Quantity		Unit Price		Factor		Total	
			Installation	1.00	x	2,797.10	x	1.1320	=	3,166.32	
			new tub/shower for ADA bathroom								
163	22 42 39 00 0042	EA	Single Supply EcoPower® Faucet, Polished Chrome Finish (Toto TEL3LS10#CP)								$709.36
				Quantity		Unit Price		Factor		Total	
			Installation	1.00	x	626.64	x	1.1320	=	709.36	
			ADA sink, faucet, and drain cover.								
164	22 42 39 00 0064	EA	Three Lever Handle, Chrome Shower And Tub Filler (American Standard Colony Soft 3375.502)								$293.63
				Quantity		Unit Price		Factor		Total	
			Installation	1.00	x	218.72	x	1.1320	=	247.59	
			Demolition	1.00	x	40.67	x	1.1320	=	46.04	
			per plans								
165	22 42 39 00 0210	EA	Lavatory Protective Enclosure (IPS Truebro Lav Shield)								$350.49
				Quantity		Unit Price		Factor		Total	
			Installation	2.00	x	154.81	x	1.1320	=	350.49	
			drain cover for ADA kitchen and bathroom sink								
166	22 42 39 00 0217	EA	1/2" NPT x 3/8" Compression Chrome, Quarter Turn Dual Angle Stop (SharkBite 25558)								$555.72
				Quantity		Unit Price		Factor		Total	
			Installation	10.00	x	41.22	x	1.1320	=	466.61	
			Demolition	8.00	x	9.84	x	1.1320	=	89.11	
			new angle stops installed in bathrooms and kitchens								

Subtotal for Section - 22 **$61,651.38**

Section - 23

167	23 05 93 00 0017	EA	Balancing HVAC Duct System, Floor Height Supply, Return, Exhaust, Register And Diffuser								$61.88
				Quantity		Unit Price		Factor		Total	
			Installation	1.00	x	54.66	x	1.1320	=	61.88	
			required setup, balancing, and charging for new system								
168	23 09 23 53 0284	EA	Scheduling Program, HVAC (AHU, RTU, AC Units, Etcetera) Programming Measures								$3,880.60
				Quantity		Unit Price		Factor		Total	
			Installation	1.00	x	3,428.09	x	1.1320	=	3,880.60	
			required setup, balancing, and charging for new system								

Work Order Number: 116758.00
Work Order Title: Fashion Park Unit 257 Conversion

Section - 23

169	23 31 13 16 0063	EA	4" Diameter, 26 Gauge, 2" WG And Less (Class C), Galvanized Sheet Metal Round And Flat-Oval Connector									$240.41
				Quantity		Unit Price		Factor		Total		
			Installation	14.00	x	15.17	x	1.1320	=	240.41		
			exhaust ducting for dyer per plans									
170	23 33 13 13 0006	EA	12" Diameter Radial Opposed Blade Damper Round, Steel Construction, Manual Operated									$140.78
				Quantity		Unit Price		Factor		Total		
			Installation	1.00	x	113.45	x	1.1320	=	128.43		
			Demolition	1.00	x	10.91	x	1.1320	=	12.35		
			HVAC per plans									
171	23 33 46 00 0008	LF	12" Diameter Flexible Duct, R8.0 Insulated With Polyester Inner Liner And Metallized Outer Jacket									$2,231.74
				Quantity		Unit Price		Factor		Total		
			Installation	100.00	x	15.36	x	1.1320	=	1,738.75		
			Demolition	130.00	x	3.35	x	1.1320	=	492.99		
			HVAC per plans									
172	23 33 46 00 0020	EA	12" Diameter Flexible Duct Collar, Spin In Type, Sheet Metal, With Damper									$100.97
				Quantity		Unit Price		Factor		Total		
			Installation	1.00	x	76.62	x	1.1320	=	86.73		
			Demolition	1.00	x	12.58	x	1.1320	=	14.24		
			HVAC per plans									
173	23 34 16 00 0127	EA	30" Diameter Wheel, 2 HP, 10,192 CFM At 1/4" Static Pressure, Belt Drive, Kitchen Upblast Exhaust Fan115/208-230/60/3. Includes heat baffle, grease baffle and disconnect switch.									$9,622.60
				Quantity		Unit Price		Factor		Total		
			Installation	2.00	x	4,153.39	x	1.1320	=	9,403.27		
			Demolition	1.00	x	193.75	x	1.1320	=	219.33		
			removal of one existing and installation of 2 new									
174	23 34 16 00 0275	EA	109 CFM, Ceiling/Wall Mounted, Metal Intake Grille, Heavy Duty/Continuous Operation Exhaust Fan (Broan® LoSone® Ventilator L100MG)									$897.54
				Quantity		Unit Price		Factor		Total		
			Installation	2.00	x	379.30	x	1.1320	=	858.74		
			Demolition	1.00	x	34.28	x	1.1320	=	38.80		
			exhaust fan per plans EF-1									
175	23 37 13 13 0080	EA	20" x 20" Single Deflection Return/Exhaust Register, Aluminum, Opposed Blade Damper, Wall/Ceiling									$319.70
				Quantity		Unit Price		Factor		Total		
			Installation	1.00	x	265.64	x	1.1320	=	300.70		
			Demolition	1.00	x	16.78	x	1.1320	=	18.99		
			HVAC per plans									
176	23 37 13 13 0225	EA	18" x 8" 4-Way Adjustable Wall Supply Grille, Adjustable Deflection, Aluminum Construction									$2,395.67
				Quantity		Unit Price		Factor		Total		
			Installation	7.00	x	275.90	x	1.1320	=	2,186.23		
			Demolition	11.00	x	16.82	x	1.1320	=	209.44		
			HVAC per plans									
177	23 54 16 13 0007	EA	120 MBH, 2,000 CFM Up/Horizontal Flow Multi-Speed, Two Stage 96% AFUE Gas FurnaceBlower cooling capacity up to 5 tons.									$5,879.99
				Quantity		Unit Price		Factor		Total		
			Installation	2.00	x	2,597.17	x	1.1320	=	5,879.99		
			per plans. SH-1 and SH-2 wall mounted furnaces									

Contractor's Price Proposal - Detail Continues..

Work Order Number: 116758.00
Work Order Title: Fashion Park Unit 257 Conversion

Section - 23

178	23 81 49 00 0020		EA	7-1/2 Ton Indoor Section Split Heat Pump Packaged Unit, Horizontal Upflow With 10 KW Electric Heat								$4,932.97
					Quantity		Unit Price		Factor		Total	
				Installation	1.00	x	4,047.74	x	1.1320	=	4,582.04	
				Demolition	1.00	x	310.01	x	1.1320	=	350.93	
				new furnace per clients request								

Subtotal for Section - 23 **$30,704.85**

Section - 26

179	26 01 20 91 0002		EA	Lock Out/Tag Out Local DisconnectExcludes tag or padlock See CSI section 26 01 20 91-0004 for padlock, 26 01 20 91-0005 for tag(s).								$523.83
					Quantity		Unit Price		Factor		Total	
				Installation	15.00	x	30.85	x	1.1320	=	523.83	
				LOTO of existing circuits								
180	26 05 19 16 0402		MLF	#12 AWG, 3 Conductors, 600 Volt, Type NM, Copper, Non-Metallic Sheathed Cable								$12,214.42
					Quantity		Unit Price		Factor		Total	
				Installation	4.00	x	2,697.53	x	1.1320	=	12,214.42	
				for new electrical runs per plans								
181	26 05 19 16 0402	0377		For Installation In Wood Stud Wall (Includes Drilling), Add								$1,272.82
					Quantity		Unit Price		Factor		Total	
				Installation	4.00	x	281.10	x	1.1320	=	1,272.82	
182	26 09 23 00 0109		EA	Wall Switch Replacement Occupancy Sensor, Single GangIncludes integral occupancy sensor and relay.								$1,204.00
					Quantity		Unit Price		Factor		Total	
				Installation	10.00	x	106.36	x	1.1320	=	1,204.00	
				per plans								
183	26 09 23 00 0235		EA	Passive Infrared, Wall Switch Mounted, Wired Occupancy Sensor (Encelium PW-100-24)Excludes GB II cable.								$586.31
					Quantity		Unit Price		Factor		Total	
				Installation	2.00	x	258.97	x	1.1320	=	586.31	
				for bathrooms								
184	26 24 13 00 0213		EA	800 Amperes, 480 Volt, 4 Wire, Switchboard Incoming No Switch Circuit								$5,781.11
					Quantity		Unit Price		Factor		Total	
				Installation	1.00	x	4,332.49	x	1.1320	=	4,904.38	
				Demolition	1.00	x	774.50	x	1.1320	=	876.73	
				for new main panel to new units subpanels								
185	26 24 16 00 0470		EA	200 Ampere Rating, Main Breaker, Indoor, 42 Circuit, 4 Wire, 120/208 Volt, Assembled Panelboard With 20 Ampere, 1 Pole Plug-In Breakers								$7,931.90
					Quantity		Unit Price		Factor		Total	
				Installation	2.00	x	3,075.97	x	1.1320	=	6,964.00	
				Demolition	1.00	x	855.04	x	1.1320	=	967.91	
				1 new sub panel for each unit								
186	26 27 13 00 0125		EA	Single Phase M-90 Meter, Socket, NEMA 3R Enclosure								$6,442.28
					Quantity		Unit Price		Factor		Total	
				Installation	6.00	x	905.76	x	1.1320	=	6,151.92	
				Demolition	5.00	x	51.30	x	1.1320	=	290.36	
				installation of new meters for building								
187	26 27 26 00 0009		EA	20 Amperes, 1 Gang, GFI, Duplex Receptacle Assembly								$3,825.42
					Quantity		Unit Price		Factor		Total	
				Installation	30.00	x	96.40	x	1.1320	=	3,273.74	
				Demolition	15.00	x	32.49	x	1.1320	=	551.68	
				All new GFI outlets throughout per clients request								

Contractor's Price Proposal - Detail Continues..

Work Order Number: 116758.00
Work Order Title: Fashion Park Unit 257 Conversion

Section - 26

188	26 27 26 00 0125		EA	20 Amperes, 125 Volt Single Specification Grade Tamper Resistant ReceptaclePass & Seymour TR5351.									$1,944.32
					Quantity		Unit Price		Factor		Total		
				Installation	40.00	x	34.39	x	1.1320	=	1,557.18		
				Demolition	40.00	x	8.55	x	1.1320	=	387.14		
				all new outlets throughout per clients request									
189	26 27 26 00 0138		EA	1 Gang, 20 Amperes, 120/277 Volt, SPST, Switch Assembly									$3,327.23
					Quantity		Unit Price		Factor		Total		
				Installation	25.00	x	85.08	x	1.1320	=	2,407.76		
				Demolition	25.00	x	32.49	x	1.1320	=	919.47		
				25 switches total in both units									
190	26 51 19 00 0312		EA	8" Diameter, 1,200 Lumens, Recessed LED Downlight With Open Trim (Lithonia DOM8 LED)									$7,780.09
					Quantity		Unit Price		Factor		Total		
				Installation	19.00	x	324.11	x	1.1320	=	6,970.96		
				Demolition	19.00	x	37.62	x	1.1320	=	809.13		
				19 new slim LED lights per plans and owners request									
191	26 51 19 00 0312	0543	EA	For Dimming Driver And Sensor Switch nLight Dimming Relay, Add									$1,339.77
					Quantity		Unit Price		Factor		Total		
				Installation	17.00	x	69.62	x	1.1320	=	1,339.77		
192	26 51 19 00 0430		EA	5" Shallow, Insulated Ceiling, Air-Tite New Construction (Cooper Halo H25ICAT)									$314.84
					Quantity		Unit Price		Factor		Total		
				Installation	3.00	x	92.71	x	1.1320	=	314.84		
				3 new 5" slim LED lights per plans									
193	26 51 19 00 0470		EA	2-1/2" Diameter x 15-1/2" High, Polished Nickel, LED Wall Sconce (Hudson Valley Lighting SHAW 1200-PN)									$1,017.22
					Quantity		Unit Price		Factor		Total		
				Installation	2.00	x	415.10	x	1.1320	=	939.79		
				Demolition	2.00	x	34.20	x	1.1320	=	77.43		
				2 new wall sconces per plans in bathrooms									
194	26 56 19 00 0031		EA	9,503 Lumens, 77 Watt, 3 LEDs, Wall Mounted Security Fixture (Jarvis Corp WMFT-350)									$1,530.14
					Quantity		Unit Price		Factor		Total		
				Installation	3.00	x	388.10	x	1.1320	=	1,317.99		
				Demolition	3.00	x	62.47	x	1.1320	=	212.15		
				replace 3 existing exterior lights per clients request									

Subtotal for Section - 26 **$57,035.70**

Section - 31

195	31 05 16 00 0002		CY	#2 Stone Aggregate Fill (1-1/2" To 2-1/2" Clean)									$1,295.01
					Quantity		Unit Price		Factor		Total		
				Installation	25.00	x	45.76	x	1.1320	=	1,295.01		
				4" deep, 200 LF, 2' wide base for backfill for trenching. 20 CY for footings, and slabs									
196	31 05 16 00 0002	0053		For Up To 8, Add									$51.79
					Quantity		Unit Price		Factor		Total		
				Installation	5.00	x	9.15	x	1.1320	=	51.79		
197	31 11 00 00 0008		ACR	Clearing By Machine - Light Brush Without Grub									$174.72
					Quantity		Unit Price		Factor		Total		
				Installation	0.50	x	308.69	x	1.1320	=	174.72		
				clear out weeds in back yard									

Contractor's Price Proposal - Detail Continues..

Work Order Number: 116758.00
Work Order Title: Fashion Park Unit 257 Conversion

Section - 31

198	31 11 00 00 0017	CY	Hand Loading Of Cleared And Grubbed Material								$849.91
				Quantity		Unit Price		Factor		Total	
			Installation	20.00	x	37.54	x	1.1320	=	849.91	
			clear out weeds in back yard								
199	31 23 16 13 0007	CY	Excavation For Trenching By Hand In SoilIncludes stockpiling excess materials and trimming sides and bottom of trench.								$3,505.24
				Quantity		Unit Price		Factor		Total	
			Installation	25.00	x	123.86	x	1.1320	=	3,505.24	
			20" deep, 200 LF, 2' wide								
200	31 23 16 13 0011	CY	Backfilling or Placing Subbase for Trenches with Imported or Stockpiled Materials by Hand								$973.80
				Quantity		Unit Price		Factor		Total	
			Installation	25.00	x	34.41	x	1.1320	=	973.80	
			20" deep, 200 LF, 2' wide								
201	31 23 16 13 0014	CY	Compaction of Fill or Subbase for Trenches by Hand								$1,098.61
				Quantity		Unit Price		Factor		Total	
			Installation	25.00	x	38.82	x	1.1320	=	1,098.61	
			20" deep, 200 LF, 2' wide								
202	31 23 16 36 0009	CY	Excavation For Building Foundations And Other Structures By Hand in Soil								$6,309.43
				Quantity		Unit Price		Factor		Total	
			Installation	45.00	x	123.86	x	1.1320	=	6,309.43	
			for footings and slab								
203	31 23 16 36 0019	CY	Backfilling Around Building Foundations And Other Structures By Hand								$1,335.53
				Quantity		Unit Price		Factor		Total	
			Installation	20.00	x	58.99	x	1.1320	=	1,335.53	
			for footings and slab								
204	31 23 16 36 0022	CY	Compaction Of Fill Or Subbase For Building Foundations and Other Structures by Hand								$1,976.98
				Quantity		Unit Price		Factor		Total	
			Installation	45.00	x	38.81	x	1.1320	=	1,976.98	
			for footings and slab								

Subtotal for Section - 31 **$17,571.02**

Section - 32

205	32 16 13 13 0016	LF	6" x 12" Cast In Place Concrete Gutter With 6" Curb And Face - Straight								$609.07
				Quantity		Unit Price		Factor		Total	
			Installation	15.00	x	24.92	x	1.1320	=	423.14	
			Demolition	15.00	x	10.95	x	1.1320	=	185.93	
			for parking lot ADA modifications								
206	32 16 23 00 0002	SF	4" Cast In Place Concrete Sidewalk								$586.15
				Quantity		Unit Price		Factor		Total	
			Installation	60.00	x	8.63	x	1.1320	=	586.15	
			for parking lot ADA modifications								
207	32 16 23 00 0002 0094		For Up To 100, Add								$248.59
				Quantity		Unit Price		Factor		Total	
			Installation	60.00	x	3.66	x	1.1320	=	248.59	
208	32 16 23 00 0008	EA	Finish Concrete Handicap Drop Section In SidewalkExcludes patterned (tactile) finish.								$145.65
				Quantity		Unit Price		Factor		Total	
			Installation	1.00	x	128.67	x	1.1320	=	145.65	
			for parking lot ADA modifications								

Contractor's Price Proposal - Detail Continues..

Work Order Number: 116758.00
Work Order Title: Fashion Park Unit 257 Conversion

Section - 32

209	32 17 23 13 0074	SF	Solid Area, Painted Pavement Marking For Parking AreasUse task for lines >12" wide, stop bars, transverse lines, diagonal lines, crossing lanes, etc.									$281.82
				Quantity		Unit Price		Factor		Total		
			Installation	64.00	x	3.89	x	1.1320	=	281.82		
			for parking lot ADA modifications									
210	32 17 23 13 0088	EA	Handicap Symbol For Van Parking Stalls, Painted Pavement Marking For Parking AreasApproximate overall dimensions: 4-1/3' width x 5' height. White or blue symbol. Excludes striping.									$86.15
				Quantity		Unit Price		Factor		Total		
			Installation	2.00	x	38.05	x	1.1320	=	86.15		
			for parking lot ADA modifications									
211	32 17 26 00 0003	SF	Embedded, VPC Truncated Dome Detectable Warning SurfaceAlso raised strips or directional bars. All colors.									$832.25
				Quantity		Unit Price		Factor		Total		
			Installation	16.00	x	45.95	x	1.1320	=	832.25		
			new truncated domes per A-501									
212	32 31 23 00 0006	LF	6' High Privacy Tongue And Groove Vinyl Fence									$3,593.82
				Quantity		Unit Price		Factor		Total		
			Installation	45.00	x	63.16	x	1.1320	=	3,217.37		
			Demolition	45.00	x	7.39	x	1.1320	=	376.45		
			removal of existing vinyl fence and installation of new due to ADA width requirements . includes a 4' wide ADA gate									
213	32 31 23 00 0051	EA	6' High x 4' Wide Vinyl Gate For Privacy Or Semi-Privacy Fence And Hinge Set									$757.38
				Quantity		Unit Price		Factor		Total		
			Installation	1.00	x	611.32	x	1.1320	=	692.01		
			Demolition	1.00	x	57.74	x	1.1320	=	65.36		
			removal of existing vinyl fence and installation of new due to ADA width requirements . includes a 4' wide ADA gate									
214	32 31 23 00 0078	EA	Stainless Steel Latch Set									$124.46
				Quantity		Unit Price		Factor		Total		
			Installation	1.00	x	109.95	x	1.1320	=	124.46		
			removal of existing vinyl fence and installation of new due to ADA width requirements . includes a 4' wide ADA gate									

Subtotal for Section - 32 **$7,265.34**

Proposal Total **$610,749.96**

This total represents the correct total for the proposal. Any discrepancy between line totals, sub-totals and the proposal total is due to rounding.

The Percentage of NPP on this Proposal: **%**

GORDIAN®

Subcontractor Listing

Date: June 06, 2023

Re:

IQC Master Contract #:	CA-R7-GB06-123021-MDJ
Work Order #:	116758.00
Owner PO #:	
Title:	Fashion Park Unit 257 Conversion
Contractor:	MDJ Management
Proposal Value:	$610,749.96

Name of Contractor	Duties	Amount	%
Janus Corporation		$100,000.00	16.37
Refined Construction		$450,000.00	73.68

General Conditions for Construction Contracts - Public Housing Programs

U.S. Department of Housing and Urban Development
Office of Public and Indian Housing
OMB Approval No. 2577-0157 (exp. 11/30/2023)

Applicability. This form is applicable to any construction/development contract greater than $250,000.

Public reporting burden for this collection of information is estimated to average 1 hour. This includes the time for collecting, reviewing, and reporting the data. The information requested is required to obtain a benefit. This form includes those clauses required by OMB's common rule on grantee procurement, implemented at HUD in 2 CFR 200, and those requirements set forth in Section 3 of the Housing and Urban Development Act of 1968 and its amendment by the Housing and Community Development Act of 1992, implemented by HUD at 24 CFR Part 75. The form is required for construction contracts awarded by Public Housing Agencies (PHAs). The form is used by Housing Authorities in solicitations to provide necessary contract clauses. If the form were not used, PHAs would be unable to enforce their contracts. There are no assurances of confidentiality. HUD may not conduct or sponsor, and an applicant is not required to respond to a collection of information unless it displays a currently valid OMB control number.

	Clause	Page		Clause	Page
1.	Definitions	2		**Administrative Requirements**	
2.	Contractor's Responsibility for Work	2	25.	Contract Period	9
3.	Architect's Duties, Responsibilities and Authority	2	26.	Order of Precedence	9
4.	Other Contracts	3	27.	Payments	9
	Construction Requirements		28.	Contract Modifications	10
5.	Preconstruction Conference and Notice to Proceed	3	29.	Changes	10
6.	Construction Progress Schedule	3	30.	Suspension of Work	11
7.	Site Investigation and Conditions Affecting the Work	3	31.	Disputes	11
8.	Differing Site Conditions	4	32.	Default	11
9.	Specifications and Drawings for Construction	4	33.	Liquidated	12
10.	As-Built Drawings	5	34.	Termination of Convenience	12
11.	Material and Workmanship	5	35.	Assignment of Contract	12
12.	Permits and Codes	5	36.	Insurance	12
13.	Health, Safety, and Accident Prevention	6	37.	Subcontracts	13
14.	Temporary Buildings and Transportation Materials	6	38.	Subcontracting with Small and Minority Firms, Women's Business Enterprise, and Labor Surplus Area Firms	13
15.	Availability and Use of Utility Services	6	39.	Equal Employment Opportunity	13
16.	Protection of Existing Vegetation, Structures, Equipment, Utilities, and Improvements	6	40.	Employment, Training, and Contracting Opportunities for Low-Income Persons, Section 3 of the Housing and Urban Development Act of 1968	14
17.	Temporary Buildings and Transportation Materials	7	41.	Interest of Members of Congress	15
18.	Clean Air and Water	7	42.	Interest of Members, Officers, or Employees and Former Members, Officers, or Employees	15
19.	Energy Efficiency	7	43.	Limitations on Payments Made to Influence	15
20.	Inspection and Acceptance of Construction	7	44.	Royalties and Patents	15
21.	Use and Possession Prior to	8	45.	Examination and Retention of Contractor's Records	15
22.	Warranty of Title	8	46.	Labor Standards-Davis-Bacon and Related Acts	15
23.	Warranty of	8	47.	Non-Federal Prevailing Wage Rates	19
24.	Prohibition Against Liens	9	48.	Procurement of Recovered Materials	19

1. Definitions

(a) "Architect" means the person or other entity engaged by the PHA to perform architectural, engineering, design, and other services related to the work as provided for in the contract. When a PHA uses an engineer to act in this capacity, the terms "architect" and "engineer" shall be synonymous. The Architect shall serve as a technical representative of the Contracting Officer. The Architect's authority is as set forth elsewhere in this contract.

(b) "Contract" means the contract entered into between the PHA and the Contractor. It includes the forms of Bid, the Bid Bond, the Performance and Payment Bond or Bonds or other assurance of completion, the Certifications, Representations, and Other Statements of Bidders (form HUD-5370), these General Conditions of the Contract for Construction (form HUD-5370), the applicable wage rate determinations from the U.S. Department of Labor, any special conditions included elsewhere in the contract, the specifications, and drawings. It includes all formal changes to any of those documents by addendum, change order, or other modification.

(c) "Contracting Officer" means the person delegated the authority by the PHA to enter into, administer, and/or terminate this contract and designated as such in writing to the Contractor. The term includes any successor Contracting Officer and any duly authorized representative of the Contracting Officer also designated in writing. The Contracting Officer shall be deemed the authorized agent of the PHA in all dealings with the Contractor.

(d) "Contractor" means the person or other entity entering into the contract with the PHA to perform all of the work required under the contract.

(e) "Drawings" means the drawings enumerated in the schedule of drawings contained in the Specifications and as described in the contract clause entitled Specifications and Drawings for Construction herein.

(f) "HUD" means the United States of America acting through the Department of Housing and Urban Development including the Secretary, or any other person designated to act on its behalf. HUD has agreed, subject to the provisions of an Annual Contributions Terms and Conditions (ACC), to provide financial assistance to the PHA, which includes assistance in financing the work to be performed under this contract. As defined elsewhere in these General Conditions or the contract documents, the determination of HUD may be required to authorize changes in the work or for release of funds to the PHA for payment to the Contractor. Notwithstanding HUD's role, nothing in this contract shall be construed to create any contractual relationship between the Contractor and HUD.

(g) "Project" means the entire project, whether construction or rehabilitation, the work for which is provided for in whole or in part under this contract.

(h) "PHA" means the Public Housing Agency organized under applicable state laws which is a party to this contract.

(j) "Specifications" means the written description of the technical requirements for construction and includes the criteria and tests for determining whether the requirements are met.

(l) "Work" means materials, workmanship, and manufacture and fabrication of components.

2. Contractor's Responsibility for Work

(a) The Contractor shall furnish all necessary labor, materials, tools, equipment, and transportation necessary for performance of the work. The Contractor shall also furnish all necessary water, heat, light, and power not made available to the Contractor by the PHA pursuant to the clause entitled Availability and Use of Utility Services herein.

(b) The Contractor shall perform on the site, and with its own organization, work equivalent to at least [ ] (12 percent unless otherwise indicated) of the total amount of work to be performed under the order. This percentage may be reduced by a supplemental agreement to this order if, during performing the work, the Contractor requests a reduction and the Contracting Officer determines that the reduction would be to the advantage of the PHA.

(c) At all times during performance of this contract and until the work is completed and accepted, the Contractor shall directly superintend the work or assign and have on the work site a competent superintendent who is satisfactory to the Contracting Officer and has authority to act for the Contractor.

(d) The Contractor shall be responsible for all damages to persons or property that occur as a result of the Contractor's fault or negligence, and shall take proper safety and health precautions to protect the work, the workers, the public, and the property of others. The Contractor shall hold and save the PHA, its officers and agents, free and harmless from liability of any nature occasioned by the Contractor's performance. The Contractor shall also be responsible for all materials delivered and work performed until completion and acceptance of the entire work, except for any completed unit of work which may have been accepted under the contract.

(e) The Contractor shall lay out the work from base lines and bench marks indicated on the drawings and be responsible for all lines, levels, and measurements of all work executed under the contract. The Contractor shall verify the figures before laying out the work and will be held responsible for any error resulting from its failure to do so.

(f) The Contractor shall confine all operations (including storage of materials) on PHA premises to areas authorized or approved by the Contracting Officer.

(g) The Contractor shall at all times keep the work area, including storage areas, free from accumulations of waste materials. After completing the work and before final inspection, the Contractor shall (1) remove from the premises all scaffolding, equipment, tools, and materials (including rejected materials) that are not the property of the PHA and all rubbish caused by its work; (2) leave the work area in a clean, neat, and orderly condition satisfactory to the Contracting Officer; (3) perform all specified tests; and, (4) deliver the installation in complete and operating condition.

(h) The Contractor's responsibility will terminate when all work has been completed, the final inspection made, and the work accepted by the Contracting Officer. The Contractor will then be released from further obligation except as required by the warranties specified elsewhere in the contract.

3. Architect's Duties, Responsibilities, and Authority

(a) The Architect for this contract, and any successor, shall be designated in writing by the Contracting Officer.

(b) The Architect shall serve as the Contracting Officer's technical representative with respect to architectural, Schedule engineering, and design matters related to the work performed under the contract. The Architect may provide direction on contract performance. Such direction shall be within the scope of the contract and may not be of a nature which: (1) institutes additional work outside the scope of the contract; (2) constitutes a change as defined in the Changes clause herein; (3) causes an increase or decrease in the cost of the contract; (4) alters the Construction Progress Schedule; or (5) changes any of the other express terms or conditions of the contract.

(c) The Architect's duties and responsibilities may include but shall not be limited to:

(1) Making periodic visits to the work site, and on the basis of his/her on-site inspections, issuing written reports to the PHA which shall include all observed deficiencies. The Architect shall file a copy of the report with the Contractor's designated representative at the site;

(2) Making modifications in drawings and technical specifications and assisting the Contracting Officer in the preparation of change orders and other contract modifications for issuance by the Contracting Officer;

(3) Reviewing and making recommendations with respect to - (i) the Contractor's construction progress schedules; (ii) the Contractor's shop and detailed drawings; (iii) the machinery, mechanical and other equipment and materials or other articles proposed for use by the Contractor; and, (iv) the Contractor's price breakdown and progress payment estimates; and,

(4) Assisting in inspections, signing Certificates of Completion, and making recommendations with respect to acceptance of work completed under the contract.

4. Other Contracts

The PHA may undertake or award other contracts for additional work at or near the site of the work under this contract. The Contractor shall fully cooperate with the other contractors and with PHA employees and shall carefully adapt scheduling and performing the work under this contract to accommodate the additional work, heeding any direction that may be provided by the Contracting Officer. The Contractor shall not commit or permit any act that will interfere with the performance of work by any other contractor or by PHA employees

Construction Requirements

5. Pre-construction Conference and Notice to Proceed

(a) Within ten calendar days of contract execution, and prior to the commencement of work, the Contractor shall attend a preconstruction conference with representatives of the PHA, its Architect, and other interested parties convened by the PHA. The conference will serve to acquaint the participants with the general plan of the construction operation and all other requirements of the contract. The PHA will provide the Contractor with the date, time, and place of the conference.

(b) The contractor shall begin work upon receipt of a written Notice to Proceed from the Contracting Officer or designee. The Contractor shall not begin work prior to receiving such notice.

6. Construction Progress

(a) The Contractor shall, within five days after the work commences on the contract or another period of time determined by the Contracting Officer, prepare and submit to the Contracting Officer for approval three copies of a practicable schedule showing the order in which the Contractor proposes to perform the work, and the dates on which the Contractor contemplates starting and completing the several salient features of the work (including acquiring labor, materials, and equipment). The schedule shall be in the form of a progress chart of suitable scale to indicate appropriately the percentage of work scheduled for completion by any given date during the period. If the Contractor fails to submit a schedule within the time prescribed, the Contracting Officer may withhold approval of progress payments or take other remedies under the contract until the Contractor submits the required schedule.

(b) The Contractor shall enter the actual progress on the chart as required by the Contracting Officer, and immediately deliver three copies of the annotated schedule to the Contracting Officer. If the Contracting Officer determines, upon the basis of inspection conducted pursuant to the clause entitled Inspection and Acceptance of Construction, herein that the Contractor is not meeting the approved schedule, the Contractor shall take steps necessary to improve its progress, including those that may be required by the Contracting Officer, without additional cost to the PHA. In this circumstance, the Contracting Officer may require the Contractor to increase the number of shifts, overtime operations, days of work, and/or the amount of construction plant, and to submit for approval any supplementary schedule or schedules in chart form as the Contracting Officer deems necessary to demonstrate how the approved rate of progress will be regained.

(c) Failure of the Contractor to comply with the requirements of the Contracting Officer under this clause shall be grounds for a determination by the Contracting Officer that the Contractor is not prosecuting the work with sufficient diligence to ensure completion within the time specified in the Contract. Upon making this determination, the Contracting Officer may terminate the Contractor's right to proceed with the work, or any separable part of it, in accordance with the Default clause of this contract.

7. Site Investigation and Conditions Affecting the Work

(a) The Contractor acknowledges that it has taken steps reasonably necessary to ascertain the nature and location of the work, and that it has investigated and satisfied itself as to the general and local conditions which can affect the work or its cost, including but not limited to, (1) conditions bearing upon transportation, disposal, handling, and storage of materials; (2) the availability of labor, water, electric power, and roads;(3) uncertainties of weather, river stages, tides, or similar physical conditions at the site; (4) the conformation and conditions of the ground; and (5) the character of equipment and facilities needed preliminary to and during work performance. The Contractor also acknowledges that it has satisfied itself as to the character, quality, and quantity of surface and subsurface materials or obstacles to be encountered insofar as this information is

reasonably ascertainable from an inspection of the site, including all exploratory work done by the PHA, as well as from the drawings and specifications made a part of this contract. Any failure of the Contractor to take the actions described and acknowledged in this paragraph will not relieve the Contractor from responsibility for estimating properly the difficulty and cost of successfully performing the work, or for proceeding to successfully perform the work without additional expense to the PHA.

(b) The PHA assumes no responsibility for any conclusions or interpretations made by the Contractor based on the information made available by the PHA. Nor does the PHA assume responsibility for any understanding reached or representation made concerning conditions which can affect the work by any of its officers or agents before the execution of this contract, unless that understanding or representation is expressly stated in this contract.

8. Differing Site Conditions

(a) The Contractor shall promptly, and before the conditions are disturbed, give a written notice to the Contracting Officer of (1) subsurface or latent physical conditions at the site which differ materially from those indicated in this contract, or (2) unknown physical conditions at the site(s), of an unusual nature, which differ materially from those ordinarily encountered and generally recognized as inhering in work of the character provided for in the contract.

(b) The Contracting Officer shall investigate the site conditions promptly after receiving the notice. Work shall not proceed at the affected site, except at the Contractor's risk, until the Contracting Officer has provided written instructions to the Contractor. If the conditions do materially so differ and cause an increase or decrease in the Contractor's cost of, or the time required for, performing any part of the work under this contract, whether or not changed as a result of the conditions, the Contractor shall file a claim in writing to the PHA within ten days after receipt of such instructions and, in any event, before proceeding with the work. An equitable adjustment in the contract price, the delivery schedule, or both shall be made under this clause and the contract modified in writing accordingly.

(c) No request by the Contractor for an equitable adjustment to the contract under this clause shall be allowed, unless the Contractor has given the written notice required; provided, that the time prescribed in (a) above for giving written notice may be extended by the Contracting Officer.

(d) No request by the Contractor for an equitable adjustment to the contract for differing site conditions shall be allowed if made after final payment under this contract.

9. Specifications and Drawings for Construction

(a) The Contractor shall keep on the work site a copy of the drawings and specifications and shall at all times give the Contracting Officer access thereto. Anything mentioned in the specifications and not shown on the drawings, or shown on the drawings and not mentioned in the specifications, shall be of like effect as if shown or mentioned in both. In case of difference between drawings and specifications, the specifications shall govern. In case of discrepancy in the figures, in the drawings, or in the specifications, the matter shall be promptly submitted to the Contracting Officer, who shall promptly make a determination in writing. Any adjustment by the Contractor without such a determination shall be at its own risk and expense. The Contracting Officer shall furnish from time to time such detailed drawings and other information as considered necessary, unless otherwise provided.

(b) Wherever in the specifications or upon the drawings the words "directed", "required", "ordered", "designated", "prescribed", or words of like import are used, it shall be understood that the "direction", "requirement", "order", "designation", or "prescription", of the Contracting Officer is intended and similarly the words "approved", "acceptable", "satisfactory", or words of like import shall mean "approved by", or "acceptable to", or "satisfactory to" the Contracting Officer, unless otherwise expressly stated.

(c) Where "as shown" "as indicated", "as detailed", or words of similar import are used, it shall be understood that the reference is made to the drawings accompanying this contract unless stated otherwise. The word "provided" as used herein shall be understood to mean "provide complete in place" that is "furnished and installed".

(d) "Shop drawings" means drawings, submitted to the PHA by the Contractor, subcontractor, or any lower tier subcontractor, showing in detail (1) the proposed fabrication and assembly of structural elements and (2) the installation (i.e., form, fit, and attachment details) of materials of equipment. It includes drawings, diagrams, layouts, schematics, descriptive literature, illustrations, schedules, performance and test data, and similar materials furnished by the Contractor to explain in detail specific portions of the work required by the contract. The PHA may duplicate, use, and disclose in any manner and for any purpose shop drawings delivered under this contract.

(e) If this contract requires shop drawings, the Contractor shall coordinate all such drawings, and review them for accuracy, completeness, and compliance with other contract requirements and shall indicate its approval thereon as evidence of such coordination and review. Shop drawings submitted to the Contracting Officer without evidence of the Contractor's approval may be returned for resubmission. The Contracting Officer will indicate an approval or disapproval of the shop drawings and if not approved as submitted shall indicate the PHA's reasons therefore. Any work done before such approval shall be at the Contractor's risk. Approval by the Contracting Officer shall not relieve the Contractor from responsibility for any errors or omissions in such drawings, nor from responsibility for complying with the requirements of this contract, except with respect to variations described and approved in accordance with (f) below.

(f) If shop drawings show variations from the contract requirements, the Contractor shall describe such variations in writing, separate from the drawings, at the time of submission. If the Architect approves any such variation and the Contracting Officer concurs, the Contracting Officer shall issue an appropriate modification to the contract, except that, if the variation is minor or does not involve a change in price or in time of performance, a modification need not be issued.

(g) It shall be the responsibility of the Contractor to make timely requests of the PHA for such large scale and full size drawings, color schemes, and other additional information, not already in his possession, which shall be

required in the planning and production of the work. Such requests may be submitted as the need arises, but each such request shall be filed in ample time to permit appropriate action to be taken by all parties involved so as to avoid delay.

(h) The Contractor shall submit to the Contracting Officer for approval four copies (unless otherwise indicated) of all shop drawings as called for under the various headings of these specifications. Three sets (unless otherwise indicated) of all shop drawings, will be retained by the PHA and one set will be returned to the Contractor. As required by the Contracting Officer, the Contractor, upon completing the work under this contract, shall furnish a complete set of all shop drawings as finally approved. These drawings shall show all changes and revisions made up to the time the work is completed and accepted.

(i) This clause shall be included in all subcontracts at any tier. It shall be the responsibility of the Contractor to ensure that all shop drawings prepared by subcontractors are submitted to the Contracting Officer.

10. As-Built Drawings

(a) "As-built drawings," as used in this clause, means drawings submitted by the Contractor or subcontractor at any tier to show the construction of a particular structure or work as actually completed under the contract. "As-built drawings" shall be synonymous with "Record drawings."

(b) As required by the Contracting Officer, the Contractor shall provide the Contracting Officer accurate information to be used in the preparation of permanent as-built drawings. For this purpose, the Contractor shall record on one set of contract drawings all changes from the installations originally indicated, and record final locations of underground lines by depth from finish grade and by accurate horizontal offset distances to permanent surface improvements such as buildings, curbs, or edges of walks.

(c) This clause shall be included in all subcontracts at any tier. It shall be the responsibility of the Contractor to ensure that all as-built drawings prepared by subcontractors are submitted to the Contracting Officer.

11. Material and Workmanship

(a) All equipment, material, and articles furnished under this contract shall be new and of the most suitable grade for the purpose intended, unless otherwise specifically provided in this contract. References in the contract to equipment, material, articles, or patented processes by trade name, make, or catalog number, shall be regarded as establishing a standard of quality and shall not be construed as limiting competition. The Contractor may, at its option, use any equipment, material, article, or process that, in the judgment of, and as approved by the Contracting Officer, is equal to that named in the specifications, unless otherwise specifically provided in this contract.

(b) Approval of equipment and materials.

(1) The Contractor shall obtain the Contracting Officer's approval of the machinery and mechanical and other equipment to be incorporated into the work. When requesting approval, the Contractor shall furnish to the Contracting Officer the name of the manufacturer, the model number, and other information concerning the performance, capacity, nature, and rating of the machinery and mechanical and other equipment. When required by this contract or by the Contracting Officer, the Contractor shall also obtain the Contracting Officer's approval of the material or articles which the Contractor contemplates incorporating into the work. When requesting approval, the Contractor shall provide full information concerning the material or articles. Machinery, equipment, material, and articles that do not have the required approval shall be installed or used at the risk of subsequent rejection.

(2) When required by the specifications or the Contracting Officer, the Contractor shall submit appropriately marked samples (and certificates related to them) for approval at the Contractor's expense, with all shipping charges prepaid. The Contractor shall label, or otherwise properly mark on the container, the material or product represented, its place of origin, the name of the producer, the Contractor's name, and the identification of the construction project for which the material or product is intended to be used.

(3) Certificates shall be submitted in triplicate, describing each sample submitted for approval and certifying that the material, equipment or accessory complies with contract requirements. The certificates shall include the name and brand of the product, name of manufacturer, and the location where produced.

(4) Approval of a sample shall not constitute a waiver of the PHA right to demand full compliance with contract requirements. Materials, equipment and accessories may be rejected for cause even though samples have been approved.

(5) Wherever materials are required to comply with recognized standards or specifications, such specifications shall be accepted as establishing the technical qualities and testing methods, but shall not govern the number of tests required to be made nor modify other contract requirements. The Contracting Officer may require laboratory test reports on items submitted for approval or may approve materials on the basis of data submitted in certificates with samples. Check tests will be made on materials delivered for use only as frequently as the Contracting Officer determines necessary to insure compliance of materials with the specifications. The Contractor will assume all costs of retesting materials which fail to meet contract requirements and/or testing materials offered in substitution for those found deficient.

(6) After approval, samples will be kept in the Project office until completion of work. They may be built into the work after a substantial quantity of the materials they represent has been built in and accepted.

(c) Requirements concerning lead-based paint. The Contractor shall comply with the requirements concerning lead-based paint contained in the Lead-Based Paint Poisoning Prevention Act (42 U.S.C. 4821-4846) as implemented by 24 CFR Part 35.

12. Permits and Codes

(a) The Contractor shall give all notices and comply with all applicable laws, ordinances, codes, rules and regulations. Notwithstanding the requirement of the Contractor to comply with the drawings and specifications in the contract, all work installed shall comply with all applicable codes and regulations as amended by any

waivers. Before installing the work, the Contractor shall examine the drawings and the specifications for compliance with applicable codes and regulations bearing on the work and shall immediately report any discrepancy it may discover to the Contracting Officer. Where the requirements of the drawings and specifications fail to comply with the applicable code or regulation, the Contracting Officer shall modify the contract by change order pursuant to the clause entitled Changes herein to conform to the code or regulation.

(b) The Contractor shall secure and pay for all permits, fees, and licenses necessary for the proper execution and completion of the work. Where the PHA can arrange for the issuance of all or part of these permits, fees and licenses, without cost to the Contractor, the contract amount shall be reduced accordingly.

13. Health, Safety, and Accident Prevention

(a) In performing this contract, the Contractor shall:

(1) Ensure that no laborer or mechanic shall be required to work in surroundings or under working conditions which are unsanitary, hazardous, or dangerous to his/her health and/or safety as determined under construction safety and health standards promulgated by the Secretary of Labor by regulation;

(2) Protect the lives, health, and safety of other persons;

(3) Prevent damage to property, materials, supplies, and equipment; and,

(4) Avoid work interruptions.

(b) For these purposes, the Contractor shall:

(1) Comply with regulations and standards issued by the Secretary of Labor at 29 CFR Part 1926. Failure to comply may result in imposition of sanctions pursuant to the Contract Work Hours and Safety Standards Act (Public Law 91-54, 83 Stat. 96), 40 U.S.C. 3701 et seq.; and

(2) Include the terms of this clause in every subcontract so that such terms will be binding on each subcontractor.

(c) The Contractor shall maintain an accurate record of exposure data on all accidents incident to work performed under this contract resulting in death, traumatic injury, occupational disease, or damage to property, materials, supplies, or equipment, and shall report this data in the manner prescribed by 29 CFR Part 1904.

(d) The Contracting Officer shall notify the Contractor of any noncompliance with these requirements and of the corrective action required. This notice, when delivered to the Contractor or the Contractor's representative at the site of the work, shall be deemed sufficient notice of the noncompliance and corrective action required. After receiving the notice, the Contractor shall immediately take corrective action. If the Contractor fails or refuses to take corrective action promptly, the Contracting Officer may issue an order stopping all or part of the work until satisfactory corrective action has been taken. The Contractor shall not base any claim or request for equitable adjustment for additional time or money on any stop order issued under these circumstances.

(e) The Contractor shall be responsible for its subcontractors' compliance with the provisions of this clause. The Contractor shall take such action with respect to any subcontract as the PHA, the Secretary of Housing and Urban Development, or the Secretary of Labor shall direct as a means of enforcing such provisions.

14. Temporary Heating

The Contractor shall provide and pay for temporary heating, covering, and enclosures necessary to properly protect all work and materials against damage by dampness and cold, to dry out the work, and to facilitate the completion of the work. Any permanent heating equipment used shall be turned over to the PHA in the condition and at the time required by the specifications.

15. Availability and Use of Utility Services

(a) The PHA shall make all reasonably required amounts of utilities available to the Contractor from existing outlets and supplies, as specified in the contract. Unless otherwise provided in the contract, the amount of each utility service consumed shall be charged to or paid for by the Contractor at prevailing rates charged to the PHA or, where the utility is produced by the PHA, at reasonable rates determined by the Contracting Officer. The Contractor shall carefully conserve any utilities furnished without charge.

(b) The Contractor, at its expense and in a manner satisfactory to the Contracting Officer, shall install and maintain all necessary temporary connections and distribution lines, and all meters required to measure the amount of each utility used for the purpose of determining charges. Before final acceptance of the work by the PHA, the Contractor shall remove all the temporary connections, distribution lines, meters, and associated paraphernalia.

16. Protection of Existing Vegetation, Structures, Equipment, Utilities, and Improvements

(a) The Contractor shall preserve and protect all structures, equipment, and vegetation (such as trees, shrubs, and grass) on or adjacent to the work site, which are not to be removed under this contract, and which do not unreasonably interfere with the work required under this contract.

(b) The Contractor shall only remove trees when specifically authorized to do so, and shall avoid damaging vegetation that will remain in place. If any limbs or branches of trees are broken during performance of this contract, or by the careless operation of equipment, or by workmen, the Contractor shall trim those limbs or branches with a clean cut and paint the cut with a tree-pruning compound as directed by the Contracting Officer.

(c) The Contractor shall protect from damage all existing improvements and utilities (1) at or near the work site and (2) on adjacent property of a third party, the locations of which are made known to or should be known by the Contractor. Prior to disturbing the ground at the construction site, the Contractor shall ensure that all underground utility lines are clearly marked.

(d) The Contractor shall shore up, brace, underpin, secure, and protect as necessary all foundations and other parts of existing structures adjacent to, adjoining, and in the vicinity of the site, which may be affected by the excavations or other operations connected with the construction of the project.

(e) Any equipment temporarily removed as a result of work under this contract shall be protected, cleaned, and replaced in the same condition as at the time of award of this contract.

(f) New work which connects to existing work shall correspond in all respects with that to which it connects and/or be similar to existing work unless otherwise required by the specifications.

(g) No structural members shall be altered or in any way weakened without the written authorization of the Contracting Officer, unless such work is clearly specified in the plans or specifications.

(h) If the removal of the existing work exposes discolored or unfinished surfaces, or work out of alignment, such surfaces shall be refinished, or the material replaced as necessary to make the continuous work uniform and harmonious. This, however, shall not be construed to require the refinishing or reconstruction of dissimilar finishes previously exposed, or finished surfaces in good condition, but in different planes or on different levels **Construction** when brought together by the removal of intervening work, unless such refinishing or reconstruction is specified in the plans or specifications.

(i) The Contractor shall give all required notices to any adjoining or adjacent property owner or other party before the commencement of any work.

(j) The Contractor shall indemnify and save harmless the PHA from any damages on account of settlement or the loss of lateral support of adjoining property, any damages from changes in topography affecting drainage, and from all loss or expense and all damages for which the PHA may become liable in consequence of such injury or damage to adjoining and adjacent structures and their premises.

(k) The Contractor shall repair any damage to vegetation, structures, equipment, utilities, or improvements, including those that are the property of a third party, resulting from failure to comply with the requirements of this contract or failure to exercise reasonable care in performing the work. If the Contractor fails or refuses to repair the damage promptly, the Contracting Officer may have the necessary work performed and charge the cost to the Contractor.

17. Temporary Buildings and Transportation of Materials

(a) Temporary buildings (e.g., storage sheds, shops, offices, sanitary facilities) and utilities may be erected by the Contractor only with the approval of the Contracting Officer and shall be built with labor and materials furnished by the Contractor without expense to the PHA. The temporary buildings and utilities shall remain the property of the Contractor and shall be removed by the Contractor at its expense upon completion of the work. With the written consent of the Contracting Officer, the buildings and utilities may be abandoned and need not be removed.

(b) The Contractor shall, as directed by the Contracting Officer, use only established roadways, or use temporary roadways constructed by the Contractor when and as authorized by the Contracting Officer. When materials are transported in prosecuting the work, vehicles shall not be loaded beyond the loading capacity recommended by the manufacturer of the vehicle or prescribed by any federal, state, or local law or regulation. When it is necessary to cross curbs or sidewalks, the Contractor shall protect them from damage. The Contractor shall repair or pay for the repair of any damaged curbs, sidewalks, or roads.

18. Clean Air and Water

The contactor shall comply with the Clean Air Act, as amended, 42 USC 7401 et seq., the Federal Water Pollution Control Water Act, as amended, 33 U.S.C. 1251 et seq., and standards issued pursuant thereto in the facilities in which this contract is to be performed.

19. Energy Efficiency

The Contractor shall comply with mandatory standards and policies relating to energy efficiency which are contained in the energy conservation plan issued in compliance with the Energy Policy and Conservation Act (Pub.L. 94-163) for the State in which the work under the contract is performed.

20. Inspection and Acceptance of

(a) Definitions. As used in this clause -

(1) “Acceptance” means the act of an authorized representative of the PHA by which the PHA approves and assumes ownership of the work performed under this contract. Acceptance may be partial or complete.

(2) “Inspection” means examining and testing the work performed under the contract (including, when appropriate, raw materials, equipment, components, and intermediate assemblies) to determine whether it conforms to contract requirements.

(3) “Testing” means that element of inspection that determines the properties or elements, including functional operation of materials, equipment, or their components, by the application of established scientific principles and procedures.

(b) The Contractor shall maintain an adequate inspection system and perform such inspections as will ensure that the work performed under the contract conforms to contract requirements. All work is subject to PHA inspection and test at all places and at all reasonable times before acceptance to ensure strict compliance with the terms of the contract.

(c) PHA inspections and tests are for the sole benefit of the PHA and do not: (1) relieve the Contractor of responsibility for providing adequate quality control measures; (2) relieve the Contractor of responsibility for loss or damage of the material before acceptance; (3) constitute or imply acceptance; or, (4) affect the continuing rights of the PHA after acceptance of the completed work under paragraph (j) below.

(d) The presence or absence of the PHA inspector does not relieve the Contractor from any contract requirement, nor is the inspector authorized to change any term or condition of the specifications without the Contracting Officer’s written authorization. All instructions and approvals with respect to the work shall be given to the Contractor by the Contracting Officer.

(e) The Contractor shall promptly furnish, without additional charge, all facilities, labor, and material reasonably needed for performing such safe and convenient inspections and tests as may be required by the Contracting Officer. The PHA may charge to the Contractor any additional cost of inspection or test when work is not ready at the time specified by the Contractor for inspection or test, or when prior rejection makes reinspection or retest necessary. The PHA shall perform all inspections and tests in a manner that will not unnecessarily delay the work. Special, full size, and performance tests shall be performed as described in the contract.

(f) The PHA may conduct routine inspections of the construction site on a daily basis.

(g) The Contractor shall, without charge, replace or correct work found by the PHA not to conform to contract requirements, unless the PHA decides that it is in its interest to accept the work with an appropriate adjustment in contract price. The Contractor shall promptly segregate and remove rejected material from the premises.

(h) If the Contractor does not promptly replace or correct rejected work, the PHA may (1) by contract or otherwise, replace or correct the work and charge the cost to the Contractor, or (2) terminate for default the Contractor's right to proceed.

(i) If any work requiring inspection is covered up without approval of the PHA, it must, if requested by the Contracting Officer, be uncovered at the expense of the Contractor. If at any time before final acceptance of the entire work, the **Construction** PHA considers it necessary or advisable, to examine work already completed by removing or tearing it out, the Contractor, shall on request, promptly furnish all necessary facilities, labor, and material. If such work is found to be defective or nonconforming in any material respect due to the fault of the Contractor or its subcontractors, the Contractor shall defray all the expenses of the examination and of satisfactory reconstruction. If, however, such work is found to meet the requirements of the contract, the Contracting Officer shall make an equitable adjustment to cover the cost of the examination and reconstruction, including, if completion of the work was thereby delayed, an extension of time.

(j) The Contractor shall notify the Contracting Officer, in writing, as to the date when in its opinion all or a designated portion of the work will be substantially completed and ready for inspection. If the Architect determines that the state of preparedness is as represented, the PHA will promptly arrange for the inspection. Unless otherwise specified in the contract, the PHA shall accept, as soon as practicable after completion and inspection, all work required by the contract or that portion of the work the Contracting Officer determines and designates can be accepted separately. Acceptance shall be final and conclusive except for latent defects, fraud, gross mistakes amounting to fraud, or the PHA's right under any warranty or guarantee.

21. Use and Possession Prior to Completion

(a) The PHA shall have the right to take possession of or use any completed or partially completed part of the work. Before taking possession of or using any work, the Contracting Officer shall furnish the Contractor a list of items of work remaining to be performed or corrected on those portions of the work that the PHA intends to take possession of or use. However, failure of the Contracting Officer to list any item of work shall not relieve the Contractor of responsibility for complying with the terms of the contract. The PHA's possession or use shall not be deemed an acceptance of any work under the contract.

(b) While the PHA has such possession or use, the Contractor shall be relieved of the responsibility for (1) the loss of or damage to the work resulting from the PHA's possession or use, notwithstanding the terms of the clause entitled Permits and Codes herein; (2) all maintenance costs on the areas occupied; and, (3) furnishing heat, light, power, and water used in the areas occupied without proper remuneration therefore. If prior possession or use by the PHA delays the progress of the work or causes additional expense to the Contractor, an equitable adjustment shall be made in the contract price or the time of completion, and the contract shall be modified in writing accordingly.

22. Warranty of Title

The Contractor warrants good title to all materials, supplies, and equipment incorporated in the work and agrees to deliver the premises together with all improvements thereon free from any claims, liens or charges, and agrees further that neither it nor any other person, firm or corporation shall have any right to a lien upon the premises or anything appurtenant thereto.

23. Warranty of

(a) In addition to any other warranties in this contract, the Contractor warrants, except as provided in paragraph (j) of this clause, that work performed under this contract conforms to the contract requirements and is free of any defect in equipment, material, or workmanship performed by the Contractor or any subcontractor or supplier at any tier. This warranty shall continue for a period of _____ (one year unless otherwise indicated) from the date of final acceptance of the work. If the PHA takes possession of any part of the work before final acceptance, this warranty shall continue for a period of (one year unless otherwise indicated) from the date that the PHA takes possession.

(b) The Contractor shall remedy, at the Contractor's expense, any failure to conform, or any defect. In addition, the Contractor shall remedy, at the Contractor's expense, any damage to PHA-owned or controlled real or personal property when the damage is the result of—

(1) The Contractor's failure to conform to contract requirements; or

(2) Any defects of equipment, material, workmanship or design furnished by the Contractor.

(c) The Contractor shall restore any work damaged in fulfilling the terms and conditions of this clause. The Contractor's warranty with respect to work repaired or replaced will run for (one year unless otherwise indicated) from the date of repair or replacement.

(d) The Contracting Officer shall notify the Contractor, in writing, within a reasonable time after the discovery of any failure, defect or damage.

(e) If the Contractor fails to remedy any failure, defect, or damage within a reasonable time after receipt of notice, the PHA shall have the right to replace, repair or otherwise remedy the failure, defect, or damage at the Contractor's expense.

(f) With respect to all warranties, express or implied, from subcontractors, manufacturers, or suppliers for work performed and materials furnished under this contract, the Contractor shall:

(1) Obtain all warranties that would be given in normal commercial practice;

(2) Require all warranties to be executed in writing, for the benefit of the PHA; and,

(3) Enforce all warranties for the benefit of the PHA.

(g) In the event the Contractor's warranty under paragraph (a) of this clause has expired, the PHA may bring suit at its own expense to enforce a subcontractor's, manufacturer's or supplier's warranty.

(h) Unless a defect is caused by the negligence of the Contractor or subcontractor or supplier at any tier, the Contractor shall not be liable for the repair of any defect of material or design furnished by the PHA nor for the repair of any damage that results from any defect in PHA furnished material or design.

(i) Notwithstanding any provisions herein to the contrary, the establishment of the time periods in paragraphs (a) and (c) above relate only to the specific obligation of the Contractor to correct the work, and have no relationship to the time within which its obligation to comply with the contract may be sought to be enforced, nor to the time within which proceedings may be commenced to establish the Contractor's liability with respect to its obligation other than specifically to correct the work.

(j) This warranty shall not limit the PHA's rights under the Inspection and Acceptance of Construction clause of this contract with respect to latent defects, gross mistakes or fraud.

24. Prohibition Against Liens

The Contractor is prohibited from placing a lien on the PHA's property. This prohibition shall apply to all subcontractors at any tier and all materials suppliers.

Administrative Requirements

25. Contract Period

this contract within calendar days of the effective date of the contract, or within the time schedule established in the notice to proceed issued by the Contracting Officer.

26. Order of Provisions

accordance with the terms and conditions of the

In the event of a conflict between these General Conditions and the Specifications, the General Conditions shall prevail. In the event of a conflict between the contract and any applicable state or local law or regulation, the state or local law or regulation shall prevail; provided that such state or local law or regulation does not conflict with, or is less restrictive than applicable federal law, regulation, or Executive Order. In the event of such a conflict, applicable federal law, regulation, and Executive Order shall prevail.

27. Payments

retain ten (10) percent of the amount of progress

(a) The PHA shall pay the Contractor the price as provided in this contract.

(b) The PHA shall make progress payments approximately every 30 days as the work proceeds, on estimates of work accomplished which meets the standards of quality established under the contract, as approved by the Contracting Officer. The PHA may, subject to written determination and approval of the Contracting Officer, make more frequent payments to contractors which are qualified small businesses.

(c) Before the first progress payment under this contract, the Contractor shall furnish, in such detail as requested by the Contracting Officer, a breakdown of the total contract price showing the amount included therein for each principal category of the work, which shall substantiate the payment amount requested in order to provide a basis for determining progress payments. The breakdown shall be approved by the Contracting Officer and must be acceptable to HUD. If the contract covers more than one project, the Contractor shall furnish a separate breakdown for each. The values and quantities employed in making up this breakdown are for determining the amount of progress payments and shall not be construed as a basis for additions to or deductions from the contract price. The Contractor shall prorate its overhead and profit over the construction period of the contract.

(d) The Contractor shall submit, on forms provided by the PHA, periodic estimates showing the value of the work performed during each period based upon the approved

submitted not later than _____ days in advance of the date set for payment and are subject to correction and revision as required. The estimates must be approved by the Contracting Officer with the concurrence of the Architect prior to payment. If the contract covers more than one project, the Contractor shall furnish a separate progress payment estimate for each.

(e) Along with each request for progress payments and the required estimates, the Contractor shall furnish the following certification, or payment shall not be made: I hereby certify, to the best of my knowledge and belief, that:

(1) The amounts requested are only for performance in accordance with the specifications, terms, and conditions of the contract;

(2) Payments to subcontractors and suppliers have been made from previous payments received under the contract, and timely payments will be made from the proceeds of the payment covered by this certification, in accordance with subcontract agreements; and,

(3) This request for progress payments does not include any amounts which the prime contractor intends to withhold or retain from a subcontractor or supplier in

subcontract.

Name:

Title:

Date:

(f) Except as otherwise provided in State law, the PHA shall

payments until completion and acceptance of all work under the contract; except, that if upon completion of 50 percent of the work, the Contracting Officer, after consulting with the Architect, determines that the Contractor's performance and progress are satisfactory, the PHA may make the remaining payments in full for the work subsequently completed. If the Contracting Officer subsequently determines that the Contractor's performance and progress are unsatisfactory, the PHA shall reinstate the ten (10) percent (or other percentage as provided in State law) retainage until such time as the Contracting Officer determines that performance and progress are satisfactory.

(g) The Contracting Officer may authorize material delivered on the site and preparatory work done to be taken into consideration when computing progress payments.

Material delivered to the Contractor at locations other than the site may also be taken into consideration if the Contractor furnishes satisfactory evidence that (1) it has acquired title to such material; (2) the material is properly stored in a bonded warehouse, storage yard, or similar suitable place as may be approved by the Contracting Officer; (3) the material is insured to cover its full value; and (4) the material will be used to perform this contract. Before any progress payment which includes delivered material is made, the Contractor shall furnish such documentation as the Contracting Officer may require to assure the protection of the PHA's interest in such materials. The Contractor shall remain responsible for such stored material notwithstanding the transfer of title to the PHA.

(h) All material and work covered by progress payments made shall, at the time of payment become the sole property of the PHA, but this shall not be construed as (1) relieving the Contractor from the sole responsibility for all material and work upon which payments have been made or the restoration of any damaged work; or, (2) waiving the right of the PHA to require the fulfillment of all of the terms of the contract. In the event the work of the Contractor has been damaged by other contractors or persons other than employees of the PHA in the course of their employment, the Contractor shall restore such damaged work without cost to the PHA and to seek redress for its damage only from those who directly caused it.

(i) The PHA shall make the final payment due the Contractor under this contract after (1) completion and final acceptance of all work; and (2) presentation of release of all claims against the PHA arising by virtue of this contract, other than claims, in stated amounts, that the Contractor has specifically excepted from the operation of the release. Each such exception shall embrace no more than one claim, the basis and scope of which shall be clearly defined. The amounts for such excepted claims shall not be included in the request for final payment. A release may also be required of the assignee if the Contractor's claim to amounts payable under this contract has been assigned.

(j) Prior to making any payment, the Contracting Officer may require the Contractor to furnish receipts or other evidence of payment from all persons performing work and supplying material to the Contractor, if the Contracting Officer determines such evidence is necessary to substantiate claimed costs.

(k) The PHA shall not; (1) determine or adjust any claims for payment or disputes arising there under between the Contractor and its subcontractors or material suppliers; or, (2) withhold any moneys for the protection of the subcontractors or material suppliers. The failure or refusal of the PHA to withhold moneys from the Contractor shall in nowise impair the obligations of any surety or sureties under any bonds furnished under this contract.

28. Contract Modifications

(a) Only the Contracting Officer has authority to modify any term or condition of this contract. Any contract modification shall be authorized in writing.

(b) The Contracting Officer may modify the contract unilaterally (1) pursuant to a specific authorization stated in a contract clause (e.g., Changes); or (2) for administrative matters which do not change the rights or responsibilities of the parties (e.g., change in the PHA address). All other contract modifications shall be in the form of supplemental agreements signed by the Contractor and the Contracting Officer.

(c) When a proposed modification requires the approval of HUD prior to its issuance (e.g., a change order that exceeds the PHA's approved threshold), such modification shall not be effective until the required approval is received by the PHA.

29. Changes

(a) The Contracting Officer may, at any time, without notice to the sureties, by written order designated or indicated to be a change order, make changes in the work within the general scope of the contract including changes:
(1) In the specifications (including drawings and designs);
(2) In the method or manner of performance of the work;
(3) PHA-furnished facilities, equipment, materials, services, or site; or,
(4) Directing the acceleration in the performance of the work.

(b) Any other written order or oral order (which, as used in this paragraph (b), includes direction, instruction, interpretation, or determination) from the Contracting Officer that causes a change shall be treated as a change order under this clause; provided, that the Contractor gives the Contracting Officer written notice stating (1) the date, circumstances and source of the order and (2) that the Contractor regards the order as a change order.

(c) Except as provided in this clause, no order, statement or conduct of the Contracting Officer shall be treated as a change under this clause or entitle the Contractor to an equitable adjustment.

(d) If any change under this clause causes an increase or decrease in the Contractor's cost of, or the time required for the performance of any part of the work under this contract, whether or not changed by any such order, the Contracting Officer shall make an equitable adjustment and modify the contract in writing. However, except for a adjustment based on defective specifications, no proposal for any change under paragraph (b) above shall be allowed for any costs incurred more than 20 days (5 days for oral orders) before the Contractor gives written notice as required. In the case of defective specifications for which the PHA is responsible, the equitable adjustment shall include any increased cost reasonably incurred by the Contractor in attempting to comply with the defective specifications.

(e) The Contractor must assert its right to an adjustment under this clause within 30 days after (1) receipt of a written change order under paragraph (a) of this clause, or (2) the furnishing of a written notice under paragraph (b) of this clause, by submitting a written statement describing the general nature and the amount of the proposal. If the facts justify it, the Contracting Officer may extend the period for submission. The proposal may be included in the notice required under paragraph (b) above. No proposal by the Contractor for an equitable adjustment shall be allowed if asserted after final payment under this contract.

(f) The Contractor's written proposal for equitable adjustment shall be submitted in the form of a lump sum proposal supported with an itemized breakdown of all increases and decreases in the contract in at least the following details:

(1) Direct Costs. Materials (list individual items, the quantity and unit cost of each, and the aggregate cost); Transportation and delivery costs associated with materials; Labor breakdowns by hours or unit costs (identified with specific work to be performed); Construction equipment exclusively necessary for the change; Costs of preparation and/ or revision to shop drawings resulting from the change; Worker's Compensation and Public Liability Insurance; Employment taxes under FICA and FUTA; and, Bond Costs when size of change warrants revision.

(2) Indirect Costs. Indirect costs may include overhead, general and administrative expenses, and fringe benefits not normally treated as direct costs.

(3) Profit. The amount of profit shall be negotiated and may vary according to the nature, extent, and complexity of the work required by the change. The allowability of the direct and indirect costs shall be determined in accordance with the Contract Cost Principles and Procedures for Commercial Firms in Part 31 of the Federal Acquisition Regulation (48 CFR 1-31), as implemented by HUD Handbook 2210.18, in effect on the date of this contract. The Contractor shall not be allowed a profit on the profit received by any subcontractor. Equitable adjustments for deleted work shall include a credit for profit and may include a credit for indirect costs. On proposals covering both increases and decreases in the amount of the contract, the application of indirect costs and profit shall be on the net-change in direct costs for the Contractor or subcontractor performing the work.

(g) The Contractor shall include in the proposal its request for time extension (if any), and shall include sufficient information and dates to demonstrate whether and to what extent the change will delay the completion of the contract in its entirety.

(h) The Contracting Officer shall act on proposals within 30 days after their receipt, or notify the Contractor of the date when such action will be taken.

(i) Failure to reach an agreement on any proposal shall be a dispute under the clause entitled Disputes herein. Nothing in this clause, however, shall excuse the Contractor from proceeding with the contract as changed.

(j) Except in an emergency endangering life or property, no change shall be made by the Contractor without a prior order from the Contracting Officer.

30. Suspension of Work

(a) The Contracting Officer may order the Contractor in writing to suspend, delay, or interrupt all or any part of the work of this contract for the period of time that the Contracting Officer determines appropriate for the convenience of the PHA.

(b) If the performance of all or any part of the work is, for an unreasonable period of time, suspended, delayed, or interrupted (1) by an act of the Contracting Officer in the administration of this contract, or (2) by the Contracting Officer's failure to act within the time specified (or within a reasonable time if not specified) in this contract an adjustment shall be made for any increase in the cost of performance of the contract (excluding profit) necessarily caused by such unreasonable suspension, delay, or interruption and the contract modified in writing accordingly. However, no adjustment shall be made under this clause for any suspension, delay, or interruption to the extent that performance would have been so suspended, delayed, or interrupted by any other cause, including the fault or negligence of the Contractor or for which any equitable adjustment is provided for or excluded under any other provision of this contract.

(c) A claim under this clause shall not be allowed (1) for any costs incurred more than 20 days before the Contractor shall have notified the Contracting Officer in writing of the act or failure to act involved (but this requirement shall not apply as to a claim resulting from a suspension order); and, (2) unless the claim, in an amount stated, is asserted in writing as soon as practicable after the termination of the suspension, delay, or interruption, but not later than the date of final payment under the contract.

31. Disputes

(a) "Claim," as used in this clause, means a written demand or written assertion by one of the contracting parties seeking, as a matter of right, the payment of money in a sum certain, the adjustment or interpretation of contract terms, or other relief arising under or relating to the contract. A claim arising under the contract, unlike a claim relating to the contract, is a claim that can be resolved under a contract clause that provides for the relief sought by the claimant. A voucher, invoice, or other routine request for payment that is not in dispute when submitted is not a claim. The submission may be converted to a claim by complying with the requirements of this clause, if it is disputed either as to liability or amount or is not acted upon in a reasonable time.

(b) Except for disputes arising under the clauses entitled Labor Standards - Davis Bacon and Related Acts, herein, all disputes arising under or relating to this contract, including any claims for damages for the alleged breach thereof which are not disposed of by agreement, shall be resolved under this clause.

(c) All claims by the Contractor shall be made in writing and submitted to the Contracting Officer for a written decision. A claim by the PHA against the Contractor shall be subject to a written decision by the Contracting Officer.

(d) The Contracting Officer shall, within 60 (unless otherwise indicated) days after receipt of the request, decide the claim or notify the Contractor of the date by which the decision will be made.

(e) The Contracting Officer's decision shall be final unless the Contractor (1) appeals in writing to a higher level in the PHA in accordance with the PHA's policy and procedures, (2) refers the appeal to an independent mediator or arbitrator, or (3) files suit in a court of competent jurisdiction. Such appeal must be made within (30 unless otherwise indicated) days after receipt of the Contracting Officer's decision.

(f) The Contractor shall proceed diligently with performance of this contract, pending final resolution of any request for relief, claim, appeal, or action arising under or relating to the contract, and comply with any decision of the Contracting Officer.

32. Default

(a) If the Contractor refuses or fails to prosecute the work, or any separable part thereof, with the diligence that will insure its completion within the time specified in this contract, or any extension thereof, or fails to complete said work within this time, the Contracting Officer may, by written notice to the Contractor, terminate the right to

proceed with the work (or separable part of the work) that has been delayed. In this event, the PHA may take over the work and complete it, by contract or otherwise, and may take possession of and use any materials, equipment, and plant on the work site necessary for completing the work. The Contractor and its sureties shall be liable for any damage to the PHA resulting from the Contractor's refusal or failure to complete the work within the specified time, whether or not the Contractor's right to proceed with the work is terminated. This liability includes any increased costs incurred by the PHA in completing the work.

(b) The Contractor's right to proceed shall not be terminated or the Contractor charged with damages under this clause if—

(1) The delay in completing the work arises from unforeseeable causes beyond the control and without the fault or negligence of the Contractor. Examples of such causes include (i) acts of God, or of the public enemy, (ii) acts of the PHA or other governmental entity in either its sovereign or contractual capacity, (iii) acts of another contractor in the performance of a contract with the PHA, (iv) fires, (v) floods, (vi) epidemics, (vii) quarantine restrictions, (viii) strikes, (ix) freight embargoes, (x) unusually severe weather, or (xi) delays of subcontractors or suppliers at any tier arising from unforeseeable causes beyond the control and without the fault or negligence of both the Contractor and the subcontractors or suppliers; and

(2) The Contractor, within days (10 days unless otherwise indicated) from the beginning of such delay (unless extended by the Contracting Officer) notifies the Contracting Officer in writing of the causes of delay. The Contracting Officer shall ascertain the facts and the extent of the delay. If, in the judgment of the Contracting Officer, the findings of fact warrant such action, time for completing the work shall be extended by written modification to the contract. The findings of the Contracting Officer shall be reduced to a written decision which shall be subject to the provisions of the Disputes clause of this contract.

(c) If, after termination of the Contractor's right to proceed, it is determined that the Contractor was not in default, or that the delay was excusable, the rights and obligations of the parties will be the same as if the termination had been for convenience of the PHA.

33. Liquidated Damages

(a) If the Contractor fails to complete the work within the time specified in the contract, or any extension, as specified in the clause entitled Default of this contract, the Contractor shall pay to the PHA as liquidated damages, the sum of $ _____ Contracting Officer insert amount] for each day of delay. If different completion dates are specified in the contract for separate parts or stages of the work, the amount of liquidated damages shall be assessed on those parts or stages which are delayed. To the extent that the Contractor's delay or nonperformance is excused under another clause in this contract, liquidated damages shall not be due the PHA. The Contractor remains liable for damages caused other than by delay.

(b) If the PHA terminates the Contractor's right to proceed, the resulting damage will consist of liquidated damages until such reasonable time as may be required for final completion of the work together with any increased costs occasioned the PHA in completing the work.

(c) If the PHA does not terminate the Contractor's right to proceed, the resulting damage will consist of liquidated damages until the work is completed or accepted.

34. Termination for Convenience

(a) The Contracting Officer may terminate this contract in whole, or in part, whenever the Contracting Officer determines that such termination is in the best interest of the PHA. Any such termination shall be effected by delivery to the Contractor of a Notice of Termination specifying the extent to which the performance of the work under the contract is terminated, and the date upon which such termination becomes effective.

(b) If the performance of the work is terminated, either in whole or in part, the PHA shall be liable to the Contractor for reasonable and proper costs resulting from such termination upon the receipt by the PHA of a properly presented claim setting out in detail: (1) the total cost of the work performed to date of termination less the total amount of contract payments made to the Contractor; (2) the cost (including reasonable profit) of settling and paying claims under subcontracts and material orders for work performed and materials and supplies delivered to the site, payment for which has not been made by the PHA to the Contractor or by the Contractor to the subcontractor or supplier; (3) the cost of preserving and protecting the work already performed until the PHA or assignee takes possession thereof or assumes responsibility therefore; (4) the actual or estimated cost of legal and accounting services reasonably necessary to prepare and present the termination claim to the PHA; and (5) an amount constituting a reasonable profit on the value of the work performed by the Contractor.

(c) The Contracting Officer will act on the Contractor's claim within days (60 days unless otherwise indicated) of receipt of the Contractor's claim.

(d) Any disputes with regard to this clause are expressly made subject to the provisions of the Disputes clause of this contract.

35. Assignment of Contract

The Contractor shall not assign or transfer any interest in this contract; except that claims for monies due or to become due from the PHA under the contract may be assigned to a bank, trust company, or other financial institution. Such assignments of claims shall only be made with the written concurrence of the Contracting Officer. If the Contractor is a partnership, this contract shall inure to the benefit of the surviving or remaining member(s) of such partnership as approved by the Contracting Officer.

36. Insurance

(a) Before commencing work, the Contractor and each subcontractor shall furnish the PHA with certificates of insurance showing the following insurance is in force and will insure all operations under the Contract:

(1) Workers' Compensation, in accordance with state or Territorial Workers' Compensation laws.

(2) Commercial General Liability with a combined single limit for bodily injury and property damage of not less than $ _____ [Contracting Officer insert amount]

per occurrence to protect the Contractor and each subcontractor against claims for bodily injury or death and damage to the property of others. This shall cover the use of all equipment, hoists, and vehicles on the site(s) not covered by Automobile Liability under (3) below. If the Contractor has a "claims made" policy, then the following additional requirements apply: the policy must provide a "retroactive date" which must be on or before the execution date of the Contract; and the extended reporting period may not be less than five years following the completion date of the Contract.

(3) Automobile Liability on owned and non -owned motor vehicles used on the site(s) or in connection therewith for a combined single limit for bodily injury and property damage of not less than $ _____ [Contracting Officer insert amount] per occurrence.

(b) Before commencing work, the Contractor shall furnish the PHA with a certificate of insurance evidencing that Builder's Risk (fire and extended coverage) Insurance on all work in place and/or materials stored at the building site(s), including foundations and building equipment, is in force. The Builder's Risk Insurance shall be for the benefit of the Contractor and the PHA as their interests may appear and each shall be named in the policy or policies as an insured. The Contractor in installing equipment supplied by the PHA shall carry insurance on such equipment from the time the Contractor takes possession thereof until the Contract work is accepted by the PHA. The Builder's Risk Insurance need not be carried on excavations, piers, footings, or foundations until such time as work on the superstructure is started. It need not be carried on landscape work. Policies shall furnish coverage at all times for the full cash value of all completed construction, as well as materials in place and/or stored at the site(s), whether or not partial payment has been made by the PHA. The Contractor may terminate this insurance on buildings as of the date taken over for occupancy by the PHA. The Contractor is not required to carry Builder's Risk Insurance for modernization work which does not involve structural alterations or additions and where the PHA's existing fire and extended coverage policy can be endorsed to include such work.

(c) All insurance shall be carried with companies which are financially responsible and admitted to do business in the State in which the project is located. If any such insurance is due to expire during the construction period, the Contractor (including subcontractors, as applicable) shall not permit the coverage to lapse and shall furnish evidence of coverage to the Contracting Officer. All certificates of insurance, as evidence of coverage, shall provide that no coverage may be canceled or non-renewed by the insurance company until at least 30 days prior written notice has been given to the Contracting Officer.

37. Subcontracts

(a) Definitions. As used in this contract -

(1) "Subcontract" means any contract, purchase order, or other purchase agreement, including modifications and change orders to the foregoing, entered into by a subcontractor to furnish supplies, materials, equipment, and services for the performance of the prime contract or a subcontract.

(2) "Subcontractor" means any supplier, vendor, or firm that furnishes supplies, materials, equipment, or services to or for the Contractor or another subcontractor.

(b) The Contractor shall not enter into any subcontract with any subcontractor who has been temporarily denied participation in a HUD program or who has been suspended or debarred from participating in contracting programs by any agency of the United States Government or of the state in which the work under this contract is to be performed.

(c) The Contractor shall be as fully responsible for the acts or omissions of its subcontractors, and of persons either directly or indirectly employed by them as for the acts or omissions of persons directly employed by the Contractor.

(d) The Contractor shall insert appropriate clauses in all subcontracts to bind subcontractors to the terms and conditions of this contract insofar as they are applicable to the work of subcontractors.

(e) Nothing contained in this contract shall create any contractual relationship between any subcontractor and the PHA or between the subcontractor and HUD.

38. Subcontracting with Small and Minority Firms, Women's Business Enterprise, and Labor Surplus Area Firms

The Contractor shall take the following steps to ensure that, whenever possible, subcontracts are awarded to small business firms, minority firms, women's business enterprises, and labor surplus area firms:

(a) Placing qualified small and minority businesses and women's business enterprises on solicitation lists;

(b) Ensuring that small and minority businesses and women's business enterprises are solicited whenever they are potential sources;

(c) Dividing total requirements, when economically feasible, into smaller tasks or quantities to permit maximum participation by small and minority businesses and women's business enterprises;

(d) Establishing delivery schedules, where the requirements of the contract permit, which encourage participation by small and minority businesses and women's business enterprises; and

(e) Using the services and assistance of the U.S. Small Business Administration, the Minority Business Development Agency of the U.S. Department of Commerce, and State and local governmental small business agencies.

39. Equal Employment Opportunity

During the performance of this contract, the Contractor/Seller agrees as follows:

(a) The Contractor/Seller shall not discriminate against any employee or applicant for employment because of of race color, religion, sex, sexual orientation, gender identity, disability, or national origin.

(b) The Contractor/Seller shall take affirmative action to ensure that applicants are employed, and that employees are treated during employment without regard to their race, color, religion, sex, sexual orientation, gender identity, disability, or national origin. Such action shall include, but not be limited to, (1) employment, (2) upgrading demotion, (4) transfer, (5) recruitment or recruitment advertising, (6) layoff or termination, (7) rates of pay or other forms of compensation, and (8) selection for training,including apprenticeship

(c) The Contractor/Seller agrees to post in conspicuous places available to employees and applicants for employment the notices to be provided by the Contracting Officer setting forth the provisions of this nondiscrimination clause.
(d) The Contractor/Seller shall, in all solicitations or advertisements for employees placed by or on behalf of the Contractor/Seller, state that all qualified applicants will receive consideration for employment without regard to race, color, religion, sex, or national origin.
(e) The Contractor/Seller shall send, to each labor union or representative of workers with which it has a collective bargaining agreement or other contract or understanding, the notice to be provided by the Contracting Officer advising the labor union or workers' representative of the Contractor's commitments under this clause, and post copies of the notice in conspicuous places available to employees and applicants for employment.
(f) The Contractor/Seller shall comply with Executive Order 11246, as amended, and the rules, regulations, and orders of the Secretary of Labor.
(g) The Contractor/Seller shall furnish all information and reports required by Executive Order 11246, as amended, Section 503 of the Rehabilitation Act of 1973, as amended, and by rules, regulations, and orders of the Secretary of Labor, or pursuant thereto. The Contractor/Seller shall permit

access to its books, records, and accounts by the Secretary of Labor for purposes of investigation to ascertain compliance with such rules, regulations, and orders.

(h) In the event of a that the Contractor/Seller is in noncompliance with the nondiscrimination clauses of this contract or with any of such rules, regulations, or orders, this contract may be canceled, terminated or suspended in whole or in part and the contractor/seller may be declared ineligible for further Government contracts in accordance with procedures authorized in Executive Order 11246 of September 24, 1965, and such other sanctions may be imposed and remedies invoked as provided in Executive Order 11246 of September 24, 1965, or by rule, regulation, or order of the Secretary of Labor, or as otherwise provided by law.

(i)The contractor/seller will include the provisions of paragraphs (a) through (h) in every subcontract or purchase order unless exempted by rules, regulations, or orders of the Secretary of Labor issued pursuant to section 204 of Executive Order 11246 of September 24, 1965, so that such provisions will be binding upon each sub[contractor/seller] or vendor. The [contractor/seller] will take such action with respect to any subcontract or purchase order as may be directed by the Secretary of Labor as a means of enforcing such provisions in cluding sanctions for noncompliance: Provided, however, that in the event the [contractor/seller] becomes involved in, or is threatened with, litigation with a subcontractor or vendor as a result of such direction, the [contractor/seller] may request the United States to enter into such litigation to protect the interests of the United States.

(j) Compliance with the requirements of this clause shall be to the maximum extent consistent with, but not in derogation of, compliance with section 7(b) of the Indian Self-Determination and Education Assistance Act and the Indian Preference clause of this contract.

40. Employment, Training, and Contracting Opportunities for Low-Income Persons, Section 3 of the Housing and Urban Development Act of 1968.

(a) The work to be performed under this contract is subject to the requirements of Section 3 of the Housing and Urban Development Act of 1968, as amended, 12 U.S.C. 1701u (section 3). The purpose of section 3 is to ensure that employment and other economic opportunities generated by HUD assistance or HUD-assisted projects covered by Section 3, shall, to the greatest extent feasible, be directed to low- and very low-income persons, particularly persons who are recipients of HUD assistance for housing.
(b) The parties to this contract agree to comply with HUD's regulations in 24 CFR Part 75, which implement Section 3. As evidenced by their execution of this contract, the parties to this contract certify that they are under no contractual or other impediment that would prevent them from complying with the Part 75 regulations.
(c) The contractor agrees to send to each labor organization or representative of workers with which the contractor has a collective bargaining agreement or other understanding, if any, a notice advising the labor organization or workers' representative of the contractor's commitments under this section 3 clause and will post copies of the notice in conspicuous places at the work site where both employees and applicants for training and employment positions can see the notice. The notice shall describe the Section 3 prioritization requirements and shall state the minimum percentages of labor hour requirements established in the Benchmark Notice (FR-6085-N-04).
(d) The contractor agrees to include this section 3 clause in every subcontract subject to compliance with regulations in 24 CFR Part 75, and agrees to take appropriate action, as provided in an applicable provision of the subcontract or in this section 3 clause, upon a finding that the subcontractor is in violation of the regulations in 24 CFR Part 75. The contractor will not subcontract with any subcontractor where the contractor has notice or knowledge that the subcontractor has been found in violation of the regulations in 24 CFR Part 75.
(e) Noncompliance with HUD's regulations in 24 CFR Part 75 may result in sanctions, termination of this contract for default, and debarment or suspension from future HUD assisted contracts.
(f) Contracts, subcontracts, grants, or subgrants subject to Section 7(b) of the Indian Self-Determination and Education Assistance Act (25 U.S.C. 5307(b)) or subject to tribal preference requirements as authorized under 101(k) of the Native American Housing Assistance and Self-Determination Act (25 U.S.C. 4111(k)) must provide preferences in employment, training, and business opportunities to Indians and Indian organizations, and are therefore not subject to the requirements of 24 CFR Part 75.

41. Interest of Members of Congress

No member of or delegate to the Congress of the United States of America shall be admitted to any share or part of this contract or to any benefit that may arise therefrom.

42. Interest of Members, Officers, or Employees and Former Members, Officers, or Employees

No member, officer, or employee of the PHA, no member of the governing body of the locality in which the project is situated, no member of the governing body of the locality in which the PHA was activated, and no other public official of such locality or localities who exercises any functions or responsibilities with respect to the project, shall, during his or her tenure, or for one year thereafter, have any interest, direct or indirect, in this contract or the proceeds thereof.

43. Limitations on Payments made to Influence Certain Federal Financial Transactions

(a) The Contractor agrees to comply with Section 1352 of Title 31, United States Code which prohibits the use of Acts Federal appropriated funds to pay any person for influencing or attempting to influence an officer or employee of any agency, a Member of Congress, and officer or employee of Congress, or an employee of a Member of Congress in connection with any of the following covered Federal actions: the awarding of any Federal contract; the making of any Federal grant; the making of any Federal loan; the entering into of any cooperative agreement; or the modification of any Federal contract, grant, loan, or cooperative agreement.

(b) The Contractor further agrees to comply with the requirement of the Act to furnish a disclosure (OMB Standard Form LLL, Disclosure of Lobbying Activities) if any funds other than Federal appropriated funds (including profit or fee received under a covered Federal transaction) have been paid, or will be paid, to any person for influencing or attempting to influence an officer or employee of any agency, a Member of Congress, an officer or employee of Congress, or an employee of a Member of Congress in connection with a Federal contract, grant, loan, or cooperative agreement.

44. Royalties and Patents

The Contractor shall pay all royalties and license fees. It shall defend all suits or claims for infringement of any patent rights and shall save the PHA harmless from loss on account thereof; except that the PHA shall be responsible for all such loss when a particular design, process or the product of a particular manufacturer or manufacturers is specified and the Contractor has no reason to believe that the specified design, process, or product is an infringement. If, however, the Contractor has reason to believe that any design, process or product specified is an infringement of a patent, the Contractor shall promptly notify the Contracting Officer. Failure to give such notice shall make the Contractor responsible for resultant loss.

45. Examination and Retention of Contractor's Records

(a) The PHA, HUD, or Comptroller General of the United States, or any of their duly authorized representatives shall, until 3 years after final payment under this contract, have access to and the right to examine any of the Contractor's directly pertinent books, documents, papers, or other records involving transactions related to this contract for the purpose of making audit, examination, excerpts, and transcriptions.

(b) The Contractor agrees to include in first-tier subcontracts under this contract a clause substantially the same as paragraph (a) above. "Subcontract," as used in this clause, excludes purchase orders not exceeding $10,000.

(c) The periods of access and examination in paragraphs (a) and (b) above for records relating to (1) appeals under the Disputes clause of this contract, (2) litigation or settlement of claims arising from the performance of this contract, or (3) costs and expenses of this contract to which the PHA, HUD, or Comptroller General or any of their duly authorized representatives has taken exception shall continue until disposition of such appeals, litigation, claims, or exceptions.

46. Labor Standards - Davis-Bacon and Related

If the total amount of this contract exceeds $2,000, the Federal labor standards set forth in the clause below shall apply to the development or construction work to be performed under the contract.

(a) Minimum Wages.

(1) All laborers and mechanics employed under this contract in the development or construction of the project(s) involved will be paid unconditionally and not less often than once a week, and without subsequent deduction or rebate on any account (except such payroll deductions as are permitted by regulations issued by the Secretary of Labor under the Copeland Act (29 CFR Part 3)), the full amount of wages and bona fide fringe benefits (or cash equivalents thereof) due at time of payment computed at rates not less than those contained in the wage determination of the Secretary of Labor which is attached hereto and made a part hereof, regardless of any contractual relationship which may be alleged to exist between the Contractor and such laborers and mechanics. Contributions made or costs reasonably anticipated for bona fide fringe benefits under Section 1(b)(2) of the Davis-Bacon Act on behalf of laborers or mechanics are considered wages paid to such laborers or mechanics, subject to the provisions of 29 CFR 5.5(a)(1)(iv); also, regular contributions made or costs incurred for more than a weekly period (but not less often than quarterly) under plans, funds, or programs which cover the regular weekly period, are deemed to be constructively made or incurred during such weekly period. Such laborers and mechanics shall be paid the appropriate wage rate and fringe benefits in the wage determination for the classification of work actually performed, without regard to skill, except as provided in 29 CFR 5.5(a)(4). Laborers or mechanics performing work in more than one classification may be compensated at the rate specified for each classification for the time actually worked therein; provided, that the employer's payroll records accurately set forth the time spent in each classification in which work is performed. The wage determination (including any additional classification and wage rates conformed under 29 CFR 5.5(a)(1)(ii) and the Davis-Bacon poster (WH-1321) shall

be posted at all times by the Contractor and its subcontractors at the site of the work in a prominent and accessible place where it can be easily seen by the workers.

(2) (i) Any class of laborers or mechanics, including helpers, which is not listed in the wage determination and which is to be employed under the contract shall be classified in conformance with the wage determination. HUD shall approve an additional classification and wage rate and fringe benefits therefor only when all the following criteria have been met: (A) The work to be performed by the classification requested is not performed by a classification in the wage determination; and (B) The classification is utilized in the area by the construction industry; and (C) The proposed wage rate, including any bona fide fringe benefits, bears a reasonable relationship to the wage rates contained in the wage determination.

(ii) If the Contractor and the laborers and mechanics to be employed in the classification (if known), or their representatives, and HUD or its designee agree on the classification and wage rate (including the amount designated for fringe benefits where appropriate), a report of the action taken shall be sent by HUD or its designee to the Administrator of the Wage and Hour Division, Employee Standards Administration, U.S. Department of Labor, Washington, DC 20210. The Administrator, or an authorized representative, will approve, modify, or disapprove every additional classification action within 30 days of receipt and so advise HUD or its designee or will notify HUD or its designee within the 30-day period that additional time is necessary.

(iii) In the event the Contractor, the laborers or mechanics to be employed in the classification or their representatives, and HUD or its designee do not agree on the proposed classification and wage rate (including the amount designated for fringe benefits, where appropriate), HUD or its designee shall refer the questions, including the views of all interested parties and the recommendation of HUD or its designee, to the Administrator of the Wage and Hour Division for determination. The Administrator, or an authorized representative, will issue a determination within 30 days of receipt and so advise HUD or its designee or will notify HUD or its designee within the 30-day period that additional time is necessary.

(iv) The wage rate (including fringe benefits where appropriate) determined pursuant to subparagraphs (a)(2)(ii) or (iii) of this clause shall be paid to all workers performing work in the classification under this contract from the first day on which work is performed in classification.

(3) Whenever the minimum wage rate prescribed in the contract for a class of laborers or mechanics includes a fringe benefit which is not expressed as an hourly rate, the Contractor shall either pay the benefit as stated in the wage determination or shall pay another bona fide fringe benefit or an hourly cash equivalent thereof.

(4) If the Contractor does not make payments to a trustee or other third person, the Contractor may consider as part of the wages of any laborer or mechanic the amount of any costs reasonably anticipated in providing bona fide fringe benefits under a plan or program; provided, that the Secretary of Labor has found, upon the written request of the Contractor, that the applicable standards of the Davis-Bacon Act have been met. The Secretary of Labor may require the Contractor to set aside in a separate account assets for the meeting of obligations under the plan or program.

(b) Withholding of funds. HUD or its designee shall, upon its own action or upon written request of an authorized representative of the Department of Labor, withhold or cause to be withheld from the Contractor under this contract or any other Federal contract with the same prime Contractor, or any other Federally-assisted contract subject to Davis-Bacon prevailing wage requirements, which is held by the same prime Contractor, so much of the accrued payments or advances as may be considered necessary to pay laborers and mechanics, including apprentices, trainees, and helpers, employed by the Contractor or any subcontractor the full amount of wages required by the contract. In the event of failure to pay any laborer or mechanic, including any apprentice, trainee, or helper, employed or working in the construction or development of the project, all or part of the wages required by the contract, HUD or its designee may, after written notice to the Contractor, take such action as may be necessary to cause the suspension of any further payment, advance, or guarantee of funds until such violations have ceased. HUD or its designee may, after written notice to the Contractor, disburse such amounts withheld for and on account of the Contractor or subcontractor to the respective employees to whom they are due.

(c) Payrolls and basic records.

(1) Payrolls and basic records relating thereto shall be maintained by the Contractor during the course of the work and preserved for a period of three years thereafter for all laborers and mechanics working in the construction or development of the project. Such records shall contain the name, address, and social security number of each such worker, his or her correct classification, hourly rates of wages paid (including rates of contributions or costs anticipated for bona fide fringe benefits or cash equivalents thereof of the types described in section 1(b)(2)(B) of the Davis-Bacon Act), daily and weekly number of hours worked, deductions made, and actual wages paid. Whenever the Secretary of Labor has found, under 29 CFR 5.5(a)(1)(iv), that the wages of any laborer or mechanic include the amount of costs reasonably anticipated in providing benefits under a plan or program described in section 1(b)(2)(B) of the Davis-Bacon Act, the Contractor shall maintain records which show that the commitment to provide such benefits is enforceable, that the plan or program is financially responsible, and that the plan or program has been communicated in writing to the laborers or mechanics affected, and records which show the costs anticipated or the actual cost incurred in providing such benefits. Contractors employing apprentices or trainees under approved programs shall maintain written evidence of the registration of apprenticeship programs and certification of trainee programs, the registration of the apprentices and trainees, and the ratios and wage rates prescribed in the applicable programs.

(2) (i) The Contractor shall submit weekly for each week in which any contract work is performed a copy of all payrolls to the Contracting Officer for transmission to HUD or its designee. The payrolls submitted shall set out accurately and completely all of the information required to be maintained under subparagraph (c)(1) of this clause. This information may be submitted in any form desired. Optional Form WH-347 (Federal Stock Number 029-005-00014-1) is available for this purpose and may be purchased from the Superintendent of Documents, U.S. Government Printing Office, Washington, D.C. 20402. The Contractor is responsible for the submission of copies of payrolls by all subcontractors. (Approved by the Office of Management and Budget under OMB Control Number 1214-0149.)

(ii) Each payroll submitted shall be accompanied by a "Statement of Compliance," signed by the Contractor or subcontractor or his or her agent who pays or supervises the payment of the persons employed under the contract and shall certify the following:

(A) That the payroll for the payroll period contains the information required to be maintained under paragraph (c) (1) of this clause and that such information is correct and complete;

(B) That each laborer or mechanic (including each helper, apprentice, and trainee) employed on the contract during the payroll period has been paid the full weekly wages earned, without rebate, either directly or indirectly, and that no deductions have been made either directly or indirectly from the full wages earned, other than permissible deductions as set forth in 29 CFR Part 3; and

(C) That each laborer or mechanic has been paid not less than the applicable wage rates and fringe benefits or cash equivalents for the classification of work performed, as specified in the applicable wage determination incorporated into the contract.

(iii) The weekly submission of a properly executed certification set forth on the reverse side of Optional Form WH-347 shall satisfy the requirements for submission of the "Statement of Compliance" required by subparagraph (c)(2)(ii) of this clause.

(iv) The falsification of any of the above certifications may subject the Contractor or subcontractor to civil or criminal prosecution under Section 1001 of Title 18 and Section 3729 of Title 31 of the United States Code.

(3) The Contractor or subcontractor shall make the records required under subparagraph (c)(1) available for inspection, copying, or transcription by authorized representatives of HUD or its designee, the Contracting Officer, or the Department of Labor and shall permit such representatives to interview employees during working hours on the job. If the Contractor or subcontractor fails to submit the required records or to make them available, HUD or its designee may, after written notice to the Contractor, take such action as may be necessary to cause the suspension of any further payment, advance, or guarantee of funds. Furthermore, failure to submit the required records upon request or to make such records available may be grounds for debarment action pursuant to 29 CFR 5.12.

(d) (1) Apprentices. Apprentices will be permitted to work at less than the predetermined rate for the work they performed when they are employed pursuant to and individually registered in a bona fide apprenticeship program registered with the U.S. Department of Labor, Employment and Training Administration, Office of Apprenticeship and Training, Employer and Labor Services (OATELS), or with a State Apprenticeship Agency recognized by OATELS, or if a person is employed in his or her first 90 days of probationary employment as an apprentice in such an apprenticeship program, who is not individually registered in the program, but who has been certified by OATELS or a State Apprenticeship Agency (where appropriate) to be eligible for probationary employment as an apprentice. The allowable ratio of apprentices to journeymen on the job site in any craft classification shall not be greater than the ratio permitted to the Contractor as to the entire work force under the registered program. Any worker listed on a payroll at an apprentice wage rate, who is not registered or otherwise employed as stated in this paragraph, shall be paid not less than the applicable wage rate on the wage determination for the classification of work actually performed. In addition, any apprentice performing work on the job site in excess of the ratio permitted under the registered program shall be paid not less than the applicable wage rate on the wage determination for the work actually performed. Where a contractor is performing construction on a project in a locality other than that in which its program is registered, the ratios and wage rates (expressed in percentages of the journeyman's hourly rate) specified in the Contractor's or subcontractor's registered program shall be observed. Every apprentice must be paid at not less than the rate specified in the registered program for the apprentice's level of progress, expressed as a percentage of the journeyman hourly rate specified in the applicable wage determination. Apprentices shall be paid fringe benefits in accordance with the provisions of the apprenticeship program. If the apprenticeship program does not specify fringe benefits, apprentices must be paid the full amount of fringe benefits listed on the wage determination for the applicable classification. If the Administrator of the Wage and Hour Division determines that a different practice prevails for the applicable apprentice classification, fringes shall be paid in accordance with that determination. In the event OATELS, or a State Apprenticeship Agency recognized by OATELS, withdraws approval of an apprenticeship program, the Contractor will no longer be permitted to utilize apprentices at less than the applicable predetermined rate for the work performed until an acceptable program is approved.

(2) Trainees. Except as provided in 29 CFR 5.16, trainees will not be permitted to work at less than the predetermined rate for the work performed unless they are employed pursuant to and individually registered in a program which has received prior approval, evidenced by formal certification by the U.S. Department of Labor, Employment and Training Administration. The ratio of trainees to journeymen on the job site shall not be greater than permitted under

the plan approved by the Employment and Training Administration. Every trainee must be paid at not less than the rate specified in the approved program for the trainee's level of progress, expressed as a percentage of the journeyman hourly rate specified in the applicable wage determination. Trainees shall be paid fringe benefits in accordance with the provisions of the trainee program. If the trainee program does not mention fringe benefits, trainees shall be paid the full amount of fringe benefits listed in the wage determination unless the Administrator of the Wage and Hour Division determines that there is an apprenticeship program associated with the corresponding journeyman wage rate in the wage determination which provides for less than full fringe benefits for apprentices. Any employee listed on the payroll at a trainee rate who is not registered and participating in a training plan approved by the Employment and Training Administration shall be paid not less than the applicable wage rate in the wage determination for the classification of work actually performed. In addition, any trainee performing work on the job site in excess of the ratio permitted under the registered program shall be paid not less than the applicable wage rate in the wage determination for the work actually performed. In the event the Employment and Training Administration withdraws approval of a training program, the Contractor will no longer be permitted to utilize trainees at less than the applicable predetermined rate for the work performed until an acceptable program is approved.

(3) Equal employment opportunity. The utilization of apprentices, trainees, and journeymen under this clause shall be in conformity with the equal employment opportunity requirements of Executive Order 11246, as amended, and 29 CFR Part 30.

(e) Compliance with Copeland Act requirements. The Contractor shall comply with the requirements of 29 CFR Part 3, which are hereby incorporated by reference in this contract.

(f) Contract termination; debarment. A breach of this contract clause may be grounds for termination of the contract and for debarment as a Contractor and a subcontractor as provided in 29 CFR 5.12.

(g) Compliance with Davis-Bacon and related Act requirements. All rulings and interpretations of the Davis-Bacon and related Acts contained in 29 CFR Parts 1, 3, and 5 are herein incorporated by reference in this contract.

(h) Disputes concerning labor standards. Disputes arising out of the labor standards provisions of this clause shall not be subject to the general disputes clause of this contract. Such disputes shall be resolved in accordance with the procedures of the Department of Labor set forth in 29 CFR Parts 5, 6, and 7. Disputes within the meaning of this clause include disputes between the Contractor (or any of its subcontractors) and the PHA, HUD, the U.S. Department of Labor, or the employees or their representatives.

(i) Certification of eligibility.

(1) By entering into this contract, the Contractor certifies that neither it (nor he or she) nor any person or firm who has an interest in the Contractor's firm is a person or firm ineligible to be awarded contracts by the United States Government by virtue of section 3(a) of the Davis-Bacon Act or 29 CFR 5.12(a)(1).

(2) No part of this contract shall be subcontracted to any person or firm ineligible for award of a United States Government contract by virtue of section 3(a) of the Davis-Bacon Act or 29 CFR 5.12(a)(1).

(3) The penalty for making false statements is prescribed in the U. S. Criminal Code, 18 U.S.C. 1001.

(j) Contract Work Hours and Safety Standards Act. As used in this paragraph, the terms "laborers" and "mechanics" include watchmen and guards.

(1) Overtime requirements. No contractor or subcontractor contracting for any part of the contract work which may require or involve the employment of laborers or mechanics, including watchmen and guards, shall require or permit any such laborer or mechanic in any workweek in which the individual is employed on such work to work in excess of 40 hours in such workweek unless such laborer or mechanic receives compensation at a rate not less than one and one-half times the basic rate of pay for all hours worked in excess of 40 hours in such workweek.

(2) Violation; liability for unpaid wages; liquidated damages. In the event of any violation of the provisions set forth in subparagraph (j)(1) of this clause, the Contractor and any subcontractor responsible therefor shall be liable for the unpaid wages. In addition, such Contractor and subcontractor shall be liable to the United States (in the case of work done under contract for the District of Columbia or a territory, to such District or to such territory), for liquidated damages. Such liquidated damages shall be computed with respect to each individual laborer or mechanic (including watchmen and guards) employed in violation of the provisions set forth in subparagraph (j)(1) of this clause, in the sum of $27 for each calendar day on which such individual was required or permitted to work in excess of the standard workweek of 40 hours without payment of the overtime wages required by provisions set forth in subparagraph (j)(1) of this clause. DOL posts current fines at: https://www.dol.gov/whd/govcontracts/cwhssa.htm#cmp

(3) Withholding for unpaid wages and liquidated damages. HUD or its designee shall upon its own action or upon written request of an authorized representative of the Department of Labor withhold or cause to be withheld, from any moneys payable on account of work performed by the Contractor or subcontractor under any such contract or any Federal contract with the same prime Contractor, or any other Federally-assisted contract subject to the Contract Work Hours and Safety Standards Act, which is held by the same prime Contractor, such sums as may be determined to be necessary to satisfy any liabilities of such Contractor or subcontractor for unpaid wages and liquidated damages as provided in the provisions set forth in subparagraph (j)(2) of this clause.

(k) Subcontracts. The Contractor or subcontractor shall insert in any subcontracts all the provisions contained in this clause, and such other clauses as HUD or its designee may by appropriate instructions require, and also a clause requiring the subcontractors to include these provisions in any lower tier subcontracts. The prime Contractor shall be responsible for the compliance by any subcontractor or lower tier subcontractor with all these provisions.

47. Non-Federal Prevailing Wage Rates

(a) Any prevailing wage rate (including basic hourly rate and any fringe benefits), determined under State or tribal law to be prevailing, with respect to any employee in any trade or position employed under the contract, is inapplicable to the contract and shall not be enforced against the Contractor or any subcontractor, with respect to employees engaged under the contract whenever such non-Federal prevailing wage rate exceeds:

(1) The applicable wage rate determined by the Secretary of Labor pursuant to the Davis-Bacon Act (40 U.S.C. 3141 et seq.) to be prevailing in the locality with respect to such trade;

(b) An applicable apprentice wage rate based thereon specified in an apprenticeship program registered with the U.S. Department of Labor (DOL) or a DOL-recognized State Apprenticeship Agency; or

(c) An applicable trainee wage rate based thereon specified in a DOL-certified trainee program.

48. Procurement of Recovered Materials.

(a) In accordance with Section 6002 of the Solid Waste Disposal Act, as amended by the Resource Conservation and Recovery Act, the Contractor shall procure items designated in guidelines of the Environmental Protection Agency (EPA) at 40 CFR Part 247 that contain the highest percentage of recovered materials practicable, consistent with maintaining a satisfactory level of competition. The Contractor shall procure items designated in the EPA guidelines that contain the highest percentage of recovered materials practicable unless the Contractor determines that such items: (1) are not reasonably available in a reasonable period of time; (2) fail to meet reasonable performance standards, which shall be determined on the basis of the guidelines of the National Institute of Standards and Technology, if applicable to the item; or (3) are only available at an unreasonable price.

( ) Paragraph (a) of this clause shall apply to items purchased under this contract where: (1) the Contractor purchases in excess of $10,000 of the item under this contract; or (2) during the preceding Federal fiscal year, the Contractor: (i) purchased any amount of the items for use under a contract that was funded with Federal appropriations and was with a Federal agency or a State agency or agency of a political subdivision of a State; and (ii) purchased a total of in excess of $10,000 of the item both under and outside that contract.

FASHION PARK APARTMENTS

234, 251, & 257 FASHION PARK PLACE - OXNARD, CA 93033

CITY OF OXNARD HOUSING AUTHORITY
435 SOUTH D STREET - OXNARD, CA 93030

CONSTRUCTION NOTES

1. PROVIDE WORK AND MATERIALS IN ACCORDANCE WITH THE LATEST RULES AND REGULATIONS OF APPLICABLE STATE AND LOCAL CODES, LAWS, AND STATUES. NOTHING IN THE CONTRACT DOCUMENTS IS TO BE CONSTRUED AS REQUIRING OR PERMITTING WORK CONTRARY TO THESE CODES, LAWS AND STATUES.
2. CONTRACTOR IS RESPONSIBLE FOR MAINTAINING A PERMIT SET OF CONSTRUCTION DOCUMENTS, SPECIFICATIONS, AND ADDENDA ON SITE DURING ALL PHASES OF CONSTRUCTION FOR USE BY ALL TRADES AND SHALL PROVIDE ALL SUBCONTRACTORS WITH CURRENT CONSTRUCTION DOCUMENTS AS REQUESTED. ADDITIONALLY CONTRACTOR SHALL MAINTAIN ON SITE COPIES OF APPLICABLE CODES AND REFERENCE DOCUMENTS, OR HAVE DIRECT ACCESS VIA REMOTE COMPUTER AND/OR INTERNET ACCESS.
3. CONTRACTOR SHALL REVIEW ALL THE CONTRACT DOCUMENTS, THE PROJECT SITE AND BECOME FAMILIAR WITH THE SCOPE OF WORK AND INTENT OF THE CONTRACT DOCUMENTS. IT IS INCUMBENT UPON THE CONTRACTOR TO NOTIFY THE ARCHITECT IMMEDIATELY UPON DISCOVERING DISCREPANCIES OR CONFLICTS IN THE CONTRACT DOCUMENTS. DURING BIDDING, OBTAIN PROPER, WRITTEN CLARIFICATION OF THE DISCREPANCY, CONFLICT, OR UNCLEAR ITEM PRIOR TO SUBMISSION OF BIDS. DURING CONSTRUCTION, DO NOT PROCEED WITH DEMOLITION UNTIL THE DISCREPANCY OR CONFLICT IS RESOLVED.
4. EXAMINATION OF THE SITE AND PORTIONS THEREOF WHICH WILL AFFECT THIS WORK SHALL BE MADE IMMEDIATELY BY THE CONTRACTOR(S), WHO SHALL COMPARE IT WITH THE CONTRACT DOCUMENTS AND SATISFY THEMSELVES AS TO THE CONDITIONS UNDER WHICH WORK IS TO BE PERFORMED. CONTRACTOR(S) SHALL, AT SUCH TIME, CHECK LOCATIONS OF THE EXISTING STRUCTURES AND EQUIPMENT WHICH MAY AFFECT THE WORK. NO ALLOWANCE SHALL BE MADE FOR EXTRA EXPENSE TO WHICH MAY BE MAY BE INCURRED DUE TO FAILURE O NEGLECT ON THEIR PART TO MAKE SUCH EXAMINATION.
5. EACH CONTRACTOR SHALL BE RESPONSIBLE FOR REVIEWING ALL OF THE CONTRACT DOCUMENTS AS THEY RELATE TO THE CONTRACTOR'S WORK. IN ADDITION, EACH CONTRACTOR IS RESPONSIBLE TO COORDINATE THEIR OWNER WORK WITH HE WORK OF OTHER TRADES.
6. THE CONSTRUCTION DOCUMENTS ARE PROVIDED TO ILLUSTRATE THE DESIGN AND GENERAL TYPE OF CONSTRUCTION, MATERIALS, AND WORKMANSHIP THROUGHOUT. THE DOCUMENTS DO NOT ILLUSTRATE EVERY CONDITION. THE CONTRACTOR, IN ASSUMING RESPONSIBILITY FOR THE WORK INDICATED, SHALL COMPLY WITH THE DESIGN INTENT AS WELL AS THE LETTER IN WHICH THEY ARE PREPARED.
7. CONSTRUCTION DOCUMENTS ARE COMPLEMENTARY, AND WHAT IS CALLED FOR BY ANY WILL BE AS BINDING AS IF CALLED FOR BY ALL. ALL WORK SHOWN OR REFERRED TO ON ANY CONSTRUCTION DOCUMENT SHALL BE PROVIDED AS THOUGH ON ALL RELATED DOCUMENTS.
8. WORK LISTED, SHOWN, OR REASONABLY INFERRED ON ANY CONSTRUCTION DOCUMENT SHALL BE PROVIDED BY THE CONTRACTOR, EXCEPT WHERE NOTED OTHERWISE. THE GENERAL CONTRACTOR SHALL CLOSELY COORDINATE HIS WORK WITH THAT OF OTHER CONTRACTORS OR VENDORS AND OWNER TO ASSURE THAT SCHEDULES ARE MET AND THAT WORK IS DONE IN CONFORMANCE TO MANUFACTURER'S REQUIREMENTS.
9. UNLESS OTHERWISE NOTED, WORK SCOPE IS ASSUMED NEW UNLESS NOTED AS EXISTING.
10. THE USE OF THE WORD "PROVIDE" IN CONNECTION WITH ANY SCOPE DEFINED IN THE CONSTRUCTION DOCUMENTS IS INTENDED TO MEAN THAT SUCH SHALL BE FURNISHED, INSTALLED, AND CONNECTED, UNLESS OTHERWISE NOTED.
11. IT IS REQUIRED THAT ALL CONTRACTORS AND THEIR PERSONNEL ARE PROPERLY TRAINED AND COMPETENT TO CONSTRUCT AND OTHERWISE CARRY OUT THE INTENT OF THE WORK INCORPORATED INTO THE CONTRACT DOCUMENTS.
12. THE CONTRACT DOCUMENTS CONSIST OF THE COMPLETE DRAWINGS, PROJECT MANUAL, SPECIFICATIONS, REPORTS, BIDDING INFORMATION AND OTHER INFORMATION PREPARED BY THE ARCHITECT, IT'S CONSULTANTS OR THE CONSULTANTS HIRED BY THE OWNER. IN THE EVENT OF DISCREPANCIES OR CONFLICTS IN THE DOCUMENTS, INFORMATION IN THE SPECIFICATIONS SHALL TAKE PRECEDENCE OVER THE DRAWINGS, AND LARGE SCALE DRAWINGS SHALL TAKE PRECEDENCE OVER THE DRAWINGS, AND LARGE SCALE DRAWINGS SHALL TAKE PRECEDENCE OVER SMALLER SCALE DRAWINGS.
13. THE CONTRACTOR SHALL BE RESPONSIBLE FOR THE DEVELOPMENT, COORDINATION AND SAFE EXECUTION OF CONSTRICTION MEANS, METHODS, SHORING, AND PROCEDURES.
14. AT NO ADDITIONAL COST TO THE OWNER, CONTRACTOR SHALL CORRECT WORK INSTALLED IN CONFLICT WITH THE CONTRACT DOCUMENTS.
15. THE CONTRACTOR SHALL BE RESPONSIBLE FOR INITIATING, MAINTAINING AND SUPERVISING SAFETY PRECAUTIONS AND PROGRAMS IN CONNECTION WITH HIS WORK.
16. CONTRACTOR SHALL PROTECT AREA OF WORK AND NEW OR EXISTING MATERIALS AND FINISHES FROM DAMAGE WHICH MAY OCCUR FROM CONSTRUCTION, DEMOLITION, DUST, WATER, ETC.., AND SHALL PROVIDE AND MAINTAIN TEMPORARY BARRICADES OR ENCLOSURES AS REQUIRED TO PROTECT THE PUBLIC DURING THE PERIOD OF CONSTRUCTION. AT NO ADDITIONAL EXPENSE TO THE OWNER, THE CONTRACTOR SHALL REPAIR OR REPLACE DAMAGE TO NEW AND EXITING MATERIALS, FINISHES, STRUCTURES, AND EQUIPMENT TO THE SATISFACTION OF THE OWNER.
17. CONTRACTORS SHALL EXERCISE CONTROL OVER JOB CLEANING TO PREVENT ANY DIRT, DEBRIS, OR DUST FROM AFFECTING, IN ANY WAY, FINISHED WORK OR EXISTING TO REMAIN WORK OR CREATING A SAFETY HAZARD IN OR OUTSIDE JOBSITE.
18. ONLY APPROVED WORKING DRAWINGS, WITH THE STATEMENT "ISSUED FOR CONSTRUCTION" ON THE COVER SHEET, SHALL BE USED FOR CONSTRUCTION OF THIS PROJECT.
19. DIMENSIONS ON CONSTRUCTION DRAWINGS ARE TO FACE OF STUD WALL OR FACE OF CONCRETE, UNLESS OTHERWISE NOTED. CONTRACTOR SHALL NOT SCALE DRAWINGS. DIMENSIONS NOTED "(E)" MEANING EXISTING ARE TO BE FIELD VERIFIED PRIOR TO LAYING OUT WORK.
20. IN THE CASE OF DIMENSIONS NOTED AS "CLEAR" CONTRACTOR IS RESPONSIBLE FOR REVIEWING PLANS TO DETERMINE ACTUAL THICKNESS OF FINISHES AND MEASURE FROM OUTSIDE FACE OF WALL TO ADJACENT SURFACE.
21. CONTRACTOR SHALL LEAVE JOB SITE AND AFFECTED AREAS CLEAN AND IN AN ORDERLY MANNER READY FOR MOVE IN. THIS IS TO INCLUDE CLEANING OF THE INTERIOR AND EXTERIOR FACES OF NEW AND EXISTING GLASS.

SHEET INDEX

GENERAL	
G-000	COVER SHEET
G-001	CONDITIONS OF APPROVAL
STRUCTURAL	
S-1.0	GENERAL NOTES
S-1.1	GENERAL NOTES (CONT.)
S-2.0	FOUNDATION PLAN
S-2.1	FLOOR FRAMING
S-2.2	ROOF FRAMING PLAN
S-3.0	STRUCTURAL DETAILS
S-3.1	STRUCTURAL DETAILS
ARCHITECTURAL	
A-001	SITE PLAN
A-100	DEMO FLOOR PLANS - 1ST & 2ND
A-101	FLOOR PLANS - 1ST & 2ND
A-201	ELEVATIONS
A-301	BUILDING SECTIONS
A-401	LSV - KITCHENS
A-402	LSV - BATHROOM
A-501	SITE DETAILS
A-502	ACCESSIBLE DETAILS
A-503	ROOF, DOOR & WINDOW DETAILS
A-601	SCHEDULES
A-602	WALL LEGEND
A-701	MECHANICAL PRODUCT INFORMATION
MECHANICAL	
M-0.0	HVAC NOTES/DETAILS
M-1.0	HVAC PLAN
N-1	TITLE 24 CALCS
N-2	TITLE 24 CALCS
PLUMBING	
P-0.0	PLUMBING NOTES & DETAILS
P-1.0	PLUMBING PLAN
ELECTRICAL	
E-001	GENERAL NOTES, SYMBOLS & DETAILS
E-002	RESIDENTIAL LIGHTING COMPLIANCE FORMS
E-003	ELECTRICAL SITE PLAN
E-101	DEMO FLOOR PLANS 1ST & 2ND
E-103	ELECTRICAL FLOOR PLANS - 1ST & 2ND

SCOPE OF WORK

SECTION 504 DISABILITY COMPLIANT DESIGN AND MODIFICATION OF EXISTING 2 STORY 5-BEDROOM UNIT, CONVERT UNIT INTO A FIRST FLOOR ONE-BEDROOM ACCESSIBLE UNIT WITH ADDED AREA TO PROVIDE ADEQUATE BEDROOM SIZE; AND A 2-STORY TWO-BEDROOM UNIT NOT ACCESSIBLE BUT MODERNIZED. PROVIDE ONE-HOUR AND SOUND SEPARATION BETWEEN THE TWO UNITS. PAINT ENTIRE BUILDING EXTERIOR.

PROJECT DESCRIPTION

EXISTING BUILDING: Type V-B Not Sprinklered. No change for proposed T.I.
EXISTING OCCUPANCY GROUP: Group R-2 No change for proposed T.I.

CODE ENFORCEMENT JURISDICTION: CITY OF OXNARD - BUILDING AND SAFETY
ZONING JURISDICTION: CITY OF OXNARD - PLANNING DEPARTMENT

CODE	TITLE	EDITION	LOCAL	AMENDMENTS
Administrative	Bldg. Stnds. Admin Code	2019		
Building	California Bldg. Code	2019		
Access Compliance	California Bldg. Code	2019		
Mechanical	California Mech. Code	2019		
Electrical	California Electrical Code	2019		
Plumbing	California Plumbing Code	2019		
Fire Prevention	California Fire Code	2019	YES	
	State Fire Marshall Regs.	2017		
	NFPA 99	2018		
Zoning Code	CITY OF OXNARD			

EXISTING (251-257):	**AREA**
RESIDENTIAL BUILDING	**5,670 S.F.**
(2) 5 BEDROOM UNITS 1,564 S.F. x 2 =	**3,128 S.F.**
(2) 4 BEDROOM UNITS 1,271 S.F. x 2 =	**2,542 S.F.**

PROPOSED CONVERSION:	**AREA**
RESIDENTIAL BUILDING	**5,912 S.F.**
(2) 2 BEDROOM UNITS 1,166 S.F. x 2 =	**2,332 S.F.**
(2) 1 BEDROOM UNITS 398 S.F. x 2 =	**796 S.F.**
ADDITION 121 S.F. x 2 =	**242 S.F.**
TOTAL	**3,370 S.F.**

EXISTING TO CONVERT:	**AREA**
(2) 5 BEDROOM UNITS 1,564 S.F. x 2 =	**3,128 S.F.**

EXISTING (234):	**AREA**
RESIDENTIAL BUILDING	**3,912 S.F.**
(1) 5 BEDROOM UNITS	**1,564 S.F.**
(1) 4 BEDROOM UNITS	**1,271 S.F.**
(1) 2 BEDROOM UNITS	**965 S.F.**

EXISTING TO CONVERT:	**AREA**
(1) 5 BEDROOM UNIT	**1,564 S.F.**
TOTAL EXISTING TO CONVERT (251, 257 & 234):	**AREA**
(3) 5 BEDROOM UNITS 1,564 S.F. x 3 =	**4,692 S.F.**

PROPOSED CONVERSION:	**AREA**
RESIDENTIAL BUILDING	**4,033 S.F.**
(1) 2 BEDROOM UNITS	**1,166 S.F.**
(1) 1 BEDROOM UNITS	**398 S.F.**
ADDITION	**121 S.F.**
TOTAL	**1,685 S.F.**

TOTAL PROPOSED CONVERSION:	**AREA**
(3) 2 BEDROOM UNIT	**3,498 S.F.**
(3) 1 BEDROOM UNIT	**1,194 S.F.**
ADDITION	**363 S.F.**
TOTAL	**5,055 S.F.**

PROPERTY & PROJECT INFORMATION

ZONE:
EXISTING: R-4-PD (HIGH RISE RESIDENTIAL - PLANNED DEVELOPMENT)
PROPOSED: R-4-PD (HIGH RISE RESIDENTIAL - PLANNED DEVELOPMENT)

ASSESSOR'S PARCEL NUMBERS:
222-0-151-085 & 222-0-152

ADDRESS:
234, 251, & 257 FASHION PARK, OXNARD, CALIFORNIA 93036

APPROVALS REQUIRED:
B&S PERMITS

PROJECT DIRECTORY

OWNER
City of Oxnard Housing Authority
435 South D Street
Oxnard, California, 93030
Housing Director: Emilio Ramirez
Phone: 805-385-8096
Fax: 805-385-7969
E-mail : housingdirector@oxnard.org
Project Manager: Fredi Contreras
Phone: 805-385-7887
Fax: 805-385-7969
E-mail: fredi.contreras@oxnard.org

ARCHITECT
Lauterbach & Associates Architects
Ilona S. Scott, Architect
License Number: C11881
300 Montgomery Avenue
Oxnard, California, 93036
Phone: 805-988-0912
Fax: 805-981-4510
E-Mail: ilona.scott@la-arch.com

STRUCTURAL/ MECHANICAL/ PLUMBING ENGINEER
All Trade Engineering & Design
Shane Judd
License Numbers: C70991, M34632,
17 E. High Street, Suite A
Moorpark, California 93021
Phone: 805-552-4000
E-mail: juddsalltrade@yahoo.com

ELECTRICAL ENGINEER
JMPE Electrical Engineering
John Maloney
License Number: E016083
627 Olive Street
Santa Barbara, California 93101
Phone: 805-569-9216
E-Mail: maloney@jmpe.net

VICINITY MAP

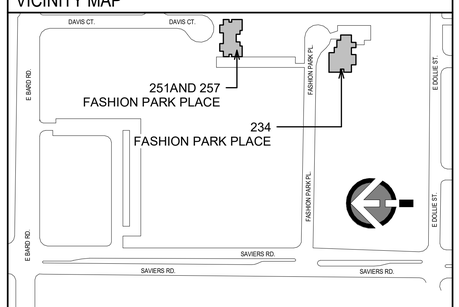

LAUTERBACH & ASSOCIATES
ARCHITECTS INC.
David C. Kesterson, Architect • Ilona Scott, Architect • Mark S. Pettit, Architect
300 MONTGOMERY AVENUE, OXNARD, CALIFORNIA 93036 | 805-988-0912 | FAX 805-981-4510 | www.la-arch.com

LICENSED ARCHITECT DAVID C. KESTERSON No. C21175 Ren. 02/25 STATE OF CALIFORNIA

LICENSED ARCHITECT ILONA SCOTT No. C11881 Ren. 06/21 STATE OF CALIFORNIA

FASHION PARK APARTMENTS
234, 251 & 257 FASHION PARK
OXNARD, CA, 93033

CITY OF OXNARD HOUSING AUTHORITY
435 S. D STREET
OXNARD, CALIFORNIA 93030

PLAN CHECK / PERMIT No. 20-1534

NO	DESCRIPTION	DATE
1	PLAN CHECK SUBMITTAL	08/10/2020

ISSUE

JOB NO. 20-190709

DRAWN BY: TJL
CHECKED BY: ISS
PROJECT MANAGER: ISS
PRINT DATE: 4/27/2023 2:48:21 PM

COVER SHEET

G-000

THESE DRAWINGS AND SPECIFICATIONS ARE THE PROPERTY AND COPYRIGHT OF LAUTERBACH & ASSOCIATES. ALL RIGHTS RESERVED, AND SHALL NOT BE USED ON ANY OTHER WORK OR PROJECT EXCEPT BY WRITTEN AGREEMENT WITH LAUTERBACH & ASSOCIATES. WRITTEN DIMENSIONS SHALL TAKE PRECEDENCE OVER SCALED DIMENSIONS AND SHALL BE VERIFIED ON THE JOB SITE. ANY DISCREPANCY SHALL BE BROUGHT TO THE NOTICE OF LAUTERBACH & ASSOCIATES PRIOR TO COMMENCEMENT OF ANY WORK.

G:\2019 Projects\20-190709 City of Oxnard\Set 4-Fashion\Drawings\Architectural\City of Oxnard - Fashion Park Apts - CD (Site and Elev's).rvt

Community Development Department
Planning Division
214 South C Street
Oxnard, California 93030
(805) 385-7858
Fax (805) 385-7417

CITY OF OXNARD CALIFORNIA

March 27, 2023

Anne Randall, Project Manager
Lauterbach & Associates Architects, Inc.
300 Montgomery Avenue, Unit C
Oxnard, CA 93036

Subject: **Project Name: Fashion Park Playground and Unit Improvements; Planning and Zoning Permit Nos. 23-140-05 (Minor Modification to Building Permit No. 20964) and 23-535-02 (Density Bonus); Fashion Park Apartments at 234, 251, and 257 Fashion Park Place *(APNs: 222-0-152-055 and 222-0-151-085)***

The City of Oxnard has reviewed your requests for modification of the above-referenced permit and ministerial approval of a Density Bonus. The requests include the conversion of three existing 5-bedroom units into three 1-bedroom units and three 2-bedroom units, and a 363 square foot addition, to increase the total number of units from 20 to 23. The Density Bonus concession (PZ No. 23-535-02) would reduce the number of required parking spaces from 66 to 44, to allow the net number of units to be increased without providing additional parking. The request also includes a proposal to convert 3,472 square feet of interior yard space in the south-western corner of the site to a new recreational playground.

Existing Land Use: The existing development currently contains a 30,229 square foot apartment complex comprising six buildings with 20 residential townhome units, 44 parking spaces, and 24,112 square feet of interior yard space on a 1.76 acre project site.

General Plan & Zoning Conformity: The 2030 General Plan land use designation on the subject property is Residential Medium High (RMH), and the property is in the High Rise Residential (R-4) Zone. The General Plan and Zoning Designation both allow for the existing multi-family residential development.

Background: The original project was built in the 1970s by the Oxnard Housing Authority as an affordable housing project, in accordance with the requirements at the time. The original development, permitted under Building Permit No. 20964, contained 20 units and 46 parking spaces. Over the following years minor site changes have resulted in changes to the parking configuration and number. The changes resulted in a net loss of two parking spaces, leaving a total of 44 spaces onsite.

Environmental Determination: In accordance with the California Environmental Quality Act (CEQA) Guidelines Section 15301 (Class 1), projects involving "existing facilities where negligible or no expansion of use" may be found to be exempt from the requirements of CEQA. The project consists of improvements to an existing development. The three additional units will

be within the existing building footprint with the exception of a small 363 square foot addition, with no significant expansion of use. This application also proposes to convert a portion of the existing lawn area to a playground for recreational use. Furthermore, the site has no habitat value for endangered, rare, or threatened species; is adequately served by public utilities and services, and will have no significant impacts on traffic, noise, air quality, or water. Therefore, Staff has determined that there is no substantial evidence that the project may have a significant effect on the environment.

Analysis: The proposed modifications associated with this request include site changes:

a) ***Site Design:*** The project proposes to convert three existing 5-bedroom units to three 2-bedroom and three 1-bedroom units, and is currently in plan check review (No. 20-1534). The project also proposes to convert 3,472 square feet of existing lawn area to a playground for recreational use, and is currently in plan check review (No. 23-0153). Subject to the approval of the Density Bonus, the project will continue to comply with the requirements of the R-4 Zone, as shown in the table below.

DEVELOPMENT STANDARD	REQUIREMENT	PROPOSED	COMPLIES?
Max. building height 16-73	4 stories not to exceed 45 feet from top of curb; SUP may allow upto11 stories or 100'	2 stories (Approximately 25 feet) - No Change	Existing
Density 16-74	1 unit per 1,500 square feet lot area. 47,045/1,500 = 31 unit maximum Any lot with an average width between 50 and 65' shall comply with the R3 zone standards. No more than 2 du on any lot with an average width between 40'-50' or with an area between 4,000 and 5,000 sqft; No more than 1 du on any lot with an average width less than 40' or on lots less than 4,000 sqft.	23 units	Yes
Front yard 16-75	20 feet; 15 feet if access is provided from the alley; 30 feet when abutting designated scenic corridors, per CD-9.4 of the 2030 General Plan.	19 feet (Access provided from the alley)	Yes
Side yard 16-76	5 feet for 1 & 2 stories; shall be increased 2.5' for each story over 2.	5 feet minimum (No Change)	Existing
Street side yard 16-76	Need not exceed 10'	N/A	N/A

Rear yard 16-77 (A)	5 feet for 1 and 2 story buildings and be increased 2.5' for each story over two. Street rear yards shall not exceed 10'	10 feet minimum (No Change)	Existing
Accessory Building 16-67 (B)	May be located in RY setback if bldg is 6' from nearest part of main bldg, is one story in height.	N/A	N/A
Interior yard space 16-78	30% of lot area, with min. dimension of 15' x 15'. 25% of required IYS may be provided by deck space if minimum 10' x 10' and 200 square feet and directly accessible from the units served. Areas must be open from ground to sky (see exceptions 16-304 - 16-307). May not include vehicle parking or circulation areas.	24,112.23 sq. ft. (32%)	Yes
Parking spaces Resident 16-622	1 space in a garage for each 1-bedroom unit, and 2 spaces in a garage for each unit with 2 -5 bedrooms. 3 garage spaces for 6 bedrooms; 4 garage spaces for 7 bedrooms, 5 garage spaces for 8+ bedrooms.	44 spaces provided, 43 required	Yes
Parking spaces Visitor 16-622	For 1* 30 units, 1 visitor space for each unit, and 0.5 visitor spaces per unit thereafter.	0 spaces provided, 23 spaces required	Yes, subject to Density Bonus permit
Fences/hedges - front yard 16-308	Must be at least 50% open, and may not exceed 42 inches. Or if a solid wall, then may not exceed 18 inches.	No Fence	Yes
Fences/hedges - side & rear yards 16-309	Not to exceed 7 feet in height.	No Change	Yes
Parking landscaping 16-641	10-foot wide strip along any street or alley. 5% of parking area. For every 10 spaces, 9 foot finger w/2 trees	No parking landscaping provided parking spaces accessed directly from the alley. No change.	Yes
ATTACHED DWELLING UNIT STANDARDS APPLIES TO PROJECTS OF 6 OR MORE UNITS			
Min. Dwelling Size 16-362(A)	One bedroom: 450 sq ft Two bedroom: 800 sq.ft	Minimum 1-bedroom Size - 552.92 Sq. Ft. Minimum 2-bedroom Size - 1,239 Sq.Ft.	Yes
Building Separation 16-362 (B)	Equal to the height of the taller structured	No Change	Yes
Recreation Facilities	Include at least one of the following:	New playground is	Yes

(12 units or more only) 16-362 (C)	Swimming pool, spa, tennis, basketball, or volleyball courts, BBQ/picnic area, recreation building, exercise course, children's play equipment, or other's as approved by PC	proposed	
Open Area (12 units or more) 16-362 (D)	One landscape area of not less than 2,500 sq.ft. with minimum dimension of not less than 35'	Existing	Yes
Distance to garage from DU 16-362 (E)	75'	N/A	N/A
Balconies & Patios 16-362 (F)	All 2nd story dwelling units shall have at least one patio or balcony having a minimum dimension of 10'	All units have private open space.	Yes
Balcony Enclosure 16-362 (G)	All balconies and patios shave have railings or walls which provide at least 50% enclosure	Private space is fenced	Yes
Storage Areas 16-362(H)	Each unit shall have a storage area of at least 225 cubic feet. Can't intrude into the minimum garage dimensions	No Change	Yes
Garages 16-362(I)	Automatic garage door openers and architectural treatment or detail	N/A	N/A
Utility Meters 16-362 (J)	Wall mounted meters shall be screened or integrated into the building design	No Change	Yes
Refuse Enclosures 16-362 (K)	Designed to reflect the major design elements or details of the residential units & provide ped access.	No Change	Yes

The Project is also proposing a small 363 square foot addition to accommodate the entrance to the new units. The resulting development will be a 30,592 square foot apartment complex containing 23 residential townhome units, 44 parking spaces, and 24,112 square feet of interior yard space, including a playground for recreational use. As identified in the table above, and subject to approval of the Density Bonus, the proposed improvements would not alter the site compliance with the standards of the R-4 Zone.

b) ***Circulation and Parking:*** Under the building permit which entitled the project, the site consisted of 20 units and 46 parking spaces. As noted in the background section above, as the result of various improvements made over the subsequent years, the site currently contains 44 parkings spaces. Per Oxnard City Code (OCC) Section 16-622 and the proposed project, a total of 66 parking spaces–43 resident spaces and 23 visitor spaces–are required. By converting three 5-bedroom units into three 1-bedroom units and three 2-bedroom units, the parking requirements for the site increases by six spaces (1 space for the 1-bedroom units, 2 spaces for each 2-bedroom units, and one visitor space for each unit). Additionally, as required under the California Building Code, the site is required to provide an ADA space, of which three are currently on site. The applicant is requesting a Density Bonus concession to allow for the reduction of City Parking requirements (Planning and Zoning Permit No. 23-535-02). Subject to the approval of the Density Bonus, the required parking for the site would be reduced to 44 spaces, making the project consistent with the City requirements and prior approvals where no changes are proposed.

c) ***Density Bonus:*** As noted above, the Project includes an administrative request for concession and incentives pursuant to Section 65915(d) of the Government Code and OCC Section 16-410(L). Under the Government Code and OCC, if a development provides at least 10% of the total units for low income households, at least 5% for very-low income households, or at least 10% for persons and families of moderate income households in a common interest development, then, the developer is eligible for up to one concession or incentive. As proposed, 100% of the residential units will be designated as affordable housing which, pursuant to Government Code Section 65915(d)(2)(D), would make the project eligible for up to four concessions or incentives. The one concession requested is as follows:

1. Reduction of the required residential parking from 66 spaces to 44 residential spaces.

The site is currently legal non-conforming with regard to the required parking for the site which, in its current configuration, requires 66 parking spaces pursuant to the OCC; only 44 parking spaces are provided. As the site is currently fully developed, it is not feasible to provide the additional required parking onsite, without a significant site redesign or the use of vehicle lifts. Both of these would result in significant cost, due to the required reconstruction and/or infrastructure improvements required. Therefore, the requested concession allows for the additional affordable units and would result in identifiable and actual cost reductions. Pursuant to changes in OCC Section 16-410(F), the Density Bonus is ministerial and falls under the authority of the decision maker on the underlying permit. As conditioned, and in compliance with state law, the project shall provide a minimum 10 percent of the units for low income households and shall be granted one concession or incentive.

The Planning Division approves the requested minor modification, based upon the following findings and subject to compliance with the following conditions:

FINDINGS

1. The minor modification is consistent with the 2030 General Plan, land use and zoning designations on the property, and City of Oxnard Building Permit #20964.
2. The minor modification is categorically exempt from the provisions of the California Environmental Quality Act (CEQA), under Section 15301.
3. The proposed improvements does not significantly intensify the use of the parcel or have any additional adverse effect on abutting parcels or the general health, safety, or welfare of the public.

CONDITIONS

1. This permit is granted for the properties described in the application on file with the Planning Division, and may not be transferred from one property to another. (PL, G-1)
2. This permit is granted for the plans dated March 27, 2023 on file with the Planning Division. The project plans shall conform to the plans, except as otherwise specified in these conditions.
3. By commencing any activity related to the project or using any structure authorized by this permit, Permittee accepts all of the conditions and obligations imposed by this permit and waives any challenge to the validity of the conditions and obligations stated therein. (CA, G-5)
4. Applicant shall obtain a building permit for any new construction or modifications to structures, including interior modifications, authorized by this permit.
5. Before the City issues building permits, Developer shall include a copy of this approval letter with all sets of construction documents and specifications for the project.
6. Prior to issuance of building permits, Developer shall correct all violations of the City Code existing on the project property for which the Code Compliance Division has open cases.
7. Prior to issuance of building permits, Applicant shall pay a document imaging fee for the Planning files in an amount calculated by Planning staff at the time of building permit review based on fees then in effect (PL/B, *PL-16*).
8. Developer shall complete the "Notice of Land Use Restrictions and Conditions" form, using the form provided by the City, for recording with the Ventura County Recorder. Before the City issues building permits, Developer shall submit the original completed, signed and notarized document, together with the required fees to the Planning Manager. (PL, G-8)
9. Prior to issuance of building permits, Developer shall enter into an agreement in a form approved by the City Attorney or provide evidence of existing agreement ensuring the continued availability of ten (10) percent of the units (2) must be rented at a level affordable to persons of families of low income, which qualified the applicant for a Density Bonus. The agreement shall be recorded in the Office of the Ventura County Recorder. The agreement shall establish specific compliance standards and specific remedies available to the City of such compliance standards are not met. The agreement shall, among other things, specify the number of low income affordable units by number of bedrooms, standards for qualifying household incomes or other qualifying criteria, a required annual report, and monitoring fees. Developer hereby agrees to deposit funds for any staff time expended for preparation of the agreement and subsequent compliance with said agreement. The term of the agreement shall be for a minimum of 55 years.

10. Prior to offering the affordable units for rent, the Owner/Developer must submit to the Housing Director the proposed rental amounts for the affordable units for review and approval.
11. Developer agrees, as a condition of adoption of this resolution, at Developer's own expense, to indemnify, defend and hold harmless the City and its agents, officers and employees from and against any claim, action or proceeding to attack, review, set aside, void or annul the approval of the resolution or any condition attached thereto or any proceedings, acts or determinations taken, done or made prior to the approval of such resolution that were part of the approval process. (CA, G-6)
12. This minor modification shall automatically become null and void 12 months from the date of this approval, unless Applicant has diligently developed the proposed project, as shown by the issuance of a grading, foundation, or building permit and the construction of substantial improvements.

This letter serves as official approval of your minor modification and density bonus requests, and pertains only to those modifications described herein. Enclosed is a set of the approved plans, for your use and/or your records. If you have any questions about this approval, please contact Evan Sahagun, Assistant Planner, at (805) 385-7863 or at evan.sahagun@oxnard.org.

Sincerely,

Joe Pearson II, 3/27/2023
Planning & Environmental Services Manager — Date

Attachments:
1) Approved Project Plans, Unit Improvements
2) Approved Project Plans, New Playground
3) Notice of Land Use Restrictions

Cc:
David Kesterson, Architect, via email (david.kesterson@la-arch.com)
Fredi Contreras, Project Manager, via email (fredi.contreras@oxnard.org)

LAUTERBACH & ASSOCIATES
ARCHITECTS INC.
David C. Kesterson, Architect • Ilona Scott, Architect • Mark S. Pettit, Architect
300 MONTGOMERY AVENUE, OXNARD, CALIFORNIA 93036 | 805-988-0912 | FAX 805-981-4910 | www.la-arch.com

LICENSED ARCHITECT ILONA SCOTT No. C11881 Ren. 06/21 STATE OF CALIFORNIA

FASHION PARK APARTMENTS
234, 251 & 257 FASHION PARK
OXNARD, CA, 93036

CITY OF OXNARD HOUSING AUTHORITY
435 S. D STREET
OXNARD, CALIFORNIA 93030

PLAN CHECK / PERMIT No. 20-1534

NO	DESCRIPTION	DATE

ISSUE

JOB NO. 20-190709
DRAWN BY: Author
CHECKED BY: Checker
PROJECT MANAGER: Approver
PRINT DATE: 3/28/2023 1:19:16 PM

CONDITIONS OF APPROVAL

G-001

THESE DRAWINGS AND SPECIFICATIONS ARE THE PROPERTY AND COPYRIGHT OF LAUTERBACH & ASSOCIATES. ALL RIGHTS RESERVED, AND SHALL NOT BE USED ON ANY OTHER WORK OR PROJECT EXCEPT BY WRITTEN AGREEMENT WITH LAUTERBACH & ASSOCIATES. WRITTEN DIMENSIONS SHALL TAKE PRECEDENCE OVER SCALED DIMENSIONS AND SHALL BE VERIFIED ON THE JOB SITE. ANY DISCREPANCY SHALL BE BROUGHT TO THE NOTICE OF LAUTERBACH & ASSOCIATES PRIOR TO COMMENCEMENT OF ANY WORK.

G:\2019 Projects\20-190709 City of Oxnard Sec 4-Fashion\Drawings\Architectural\City of Oxnard - Fashion Park Apts - CD (Site and Elevs).rvt

STRUCTURAL GENERAL NOTES

GENERAL NOTES

1. EACH CONTRACTOR SHALL CHECK AND VERIFY ALL DIMENSIONS AND CONDITIONS AT THE PROJECT SITE BEFORE EXECUTING ANY WORK. HE SHALL NOTIFY THE OWNER, ARCHITECT AND STRUCTURAL ENGINEER OF ANY AND ALL DISCREPANCIES BEFORE PROCEEDING. FOR CLARIFICATION OF DIMENSIONS, DO NOT SCALE FROM DRAWINGS. NUMERICAL DIMENSIONS SHALL TAKE PRIORITY OVER SCALING THE DRAWING.
2. THE LATEST EDITION OF THE GENERAL CONDITIONS AS ACCEPTED BY THE A.I.A. SHALL BE CONSIDERED AS PART OF THESE SPECIFICATIONS.
3. ALL WORK SHALL COMPLY WITH THE 2019 CBC REQUIREMENTS, AND BE APPLICABLE WITH LOCAL CITY ORDINANCES.
4. THE CONTRACTOR SHALL REVIEW THE PLANS AND SPECIFICATIONS WITH THE STRUCTURAL ENGINEER BEFORE BEGINNING CONSTRUCTION.
5. EACH CONTRACTOR SHALL OBTAIN & PAY FOR ALL PERMITS REQUIRED BY LOCAL AUTHORITIES BEFORE PROCEEDING WITH HIS RESPECTIVE INSTALLATION. HE SHALL ALSO ARRANGE & PAY FOR ALL INSPECTIONS AND EXAMINATIONS REQUIRED BY THOSE AUTHORITIES.
6. ALL EXISTING EQUIPMENT REMOVED BY DEMOLITION OR REHABILITATION SHALL BE DISPOSED OF AS DIRECTED BY THE OWNER.
7. REPAIR AND REPLACE ALL PROPERTY DAMAGE BY WORK UNDER THIS PROJECT TO THE SATISFACTION OF THE OWNER AND THE ARCHITECT. ALL PIPING, CONDUIT, ETC. WHICH IS ENCOUNTERED SHALL BE CALLED TO THE ATTENTION OF THE OWNER AND THE ARCHITECT AND SHALL BE ADEQUATELY SUPPORTED UNTIL PERMANENT SUPPORT IS PROVIDED OR REMOVAL IS AUTHORIZED.
8. WHEREVER IN THESE DRAWINGS ANY MATERIAL OR PROCESS IS INDICATED, IT IS FOR THE PURPOSE OF FACILITATING THE DESCRIPTION OF THE MATERIAL OR PROCESS DESIRED. THE CONTRACTOR MAY OFFER ANY MATERIAL OR PROCESS DEEMED EQUIVALENT BY THE OWNER, ARCHITECT AND STRUCTURAL ENGINEER TO THAT MATERIAL OR PROCESS INDICATED OR SPECIFIED.
9. EACH CONTRACTOR SHALL GUARANTEE, BE RESPONSIBLE FOR, & MAKE GOOD ANY AND ALL DEFECTS DUE TO FAULTS OF HIS TRADE FOR LABOR, LEAKS, OR MATERIALS FOR A PERIOD OF ONE YEAR MINIMUM FOLLOWING THE ACCEPTANCE OF THE WORK BY THE OWNER AND ARCHITECT.
10. THE CONTRACTOR SHALL SUPERVISE & DIRECT THE PROJECT DESCRIBED HEREIN. THE CONTRACTOR SHALL BE SOLELY RESPONSIBLE FOR ALL CONSTRUCTION MEANS, METHODS, TECHNIQUES, SEQUENCES & PROCEDURES AND FOR COORDINATING ALL PORTIONS OF THE WORK UNDER CONTRACT. CONTRACTOR HAS SOLE RESPONSIBILITY FOR THE SAFETY & PERFORMANCE OF THE WORK. SAFETY COMPLIANCE SHALL BE IN ACCORDANCE WITH OSHA, U.S. DEPT. OF LABOR, STATE AND LOCAL REQUIREMENTS.
11. THE CONTRACTOR SHALL FURNISH AND BE RESPONSIBLE FOR ADEQUATE SHORING, BRACING, AND PROTECTIVE MEASURES TO SAFELY EXECUTE THE WORK.

GREEN BUILDING NOTES

1. PROVIDE FLASHING FOR ALL NEW ROOF VALLEYS, AROUND NEW WINDOWS, DOORS & AT NEW CHIMNEYS TO ROOF INTERSECTIONS.
2. ALL MATERIALS DELIVERED TO THE CONSTRUCTION SITE SHALL BE PROTECTED FROM RAIN OR OTHER SOURCES MOISTURE.
3. NEW HARDWOOD, PLYWOOD, PARTICLE BOARD, AND MEDIUM DENSITY FIBERBOARD COMPOSITE WOOD PRODUCTS USED IN THE INTERIOR OR EXTERIOR OF THE BUILDING SHALL MEET THE FORMALDEHYDE LIMITS LISTED IN TABLE 4.504.5
4. THE FORMALDEHYDE EMISSIONS FORM, FORM GRN 3 SHALL BE COMPLETED PRIOR TO FINAL INSPECTION APPOVAL. THE MFR'S SPECIFICATIONS SHOWING FORMALDEHYDE CONTENT FOR ALL APPLICABLE WOOD PRODUCTS SHALL BE READILY AVAILABLE AT THE JOB SITE & BE PROVIDED TO THE FIELD INSPECTOR FOR VERIFICATION.
5. A 4" THK. BASE OF 1/2" OR LARGER CLEAN AGGREGATE SHALL BE PROVIDED FOR THE PROPOSED SLAB ON GRADE CONSTRUCTION.
6. A VAPOR BARRIER SHALL BE PROVIDED IN DIRECT CONTACT WITH CONCRETE FOR THE PROPOSED SLAB ON GRADE CONSTRUCTION.
7. BUILDING MATERIALS WITH VISIBLE SIGNS OF WATER DAMAGE SHALL NOT BE INSTALLED. WALL AND FLOOR FRAMING SHALL NOT BE ENCLOSED UNTIL IT IS INSPECTED AND FOUND TO BE SATISFACTORY BY THE BUILDING INSPECTOR.
8. NEW RESIDENTIAL GRADE EQUIPMENT & APPLIANCES PROVIDED AND INSTALLED SHALL BE ENERGY STAR LABELED IF ENERGY STAR IS APPLICABLE TO THAT EQUIPMENT OR APPLIANCE.
9. ALL DUCT AND OTHER RELATED AIR DISTRIBUTION COMPONENT OPENINGS SHALL BE COVERED WITH TAPE, PLASTIC, OR SHEET METAL UNTIL THE FINAL STARTUP OF THE HEATING & COOLING EQUIPMENT.
10. ARCHITECTURAL PAINTS & COATINGS, ADHESIVES, CAULK & SEALANTS SHALL COMPLY WITH THE VOLATILE ORGANIC COMPOUND (VOC) LIMITS LISTED IN TABLE 4.504.3
11. CONSTRUCTION WASTE SHALL BE REDUCED BY 50% AND SHALL BE HANDLED BY A CITY CERTIFIED HAULER.
12. THE HVAC, REFRIGERATION & FIRE SUPPRESSION EQUIPMENT SHALL NOT CONTAIN CFC OR HALONS.
13. AN AIR FILTER WITH A MINIMUM EFFICIENCY REPORTING VALUE (MERV) OF 8 OR HIGHER SHALL BE INSTALLED IN THE MECHANICAL SYSTEM FOR OUTSIDE AND RETURN AIR PRIOR TO OCCUPANCY.
14. THE VOC CONTENT VERIFICATION CHECKLIST, FORM GRN 2, SHALL BE COMPLETED AND VERIFIED PRIOR TO FINAL INSPECTION APPROVAL. THE MANUFACTURER'S SPECIFICATIONS SHOWING VOC CONTENT FOR ALL APPLICABLE PRODUCTS SHALL BE READILY AVAILABLE AT THE JOB SITE & BE PROVIDED TO THE FIELD INSPECTOR FOR VERIFICATION.
15. INSTALLED AUTOMATIC IRRIGATION SYSTEM CONTROLLERS SHALL BE WEATHER OR SOIL MOISTURE BASED CONTROLLERS (CGBSC 4.304.1)
16. RETENTION BASINS OF SUFFICIENT SIZE SHALL BE UTILIZED TO RETAIN STORM WATER ON THE SITE.
17. WHERE STORM WATER IS CONVEYED TO A PUBLIC DRAINAGE SYSTEM, COLLECTION POINT, GUTTER OR SIM. DISPOSAL METHOD, WATER SHALL BE FILTERED BY USE OF A BARRIER SYSTEM, WATTLE OR OTHER METHOD APPROVED BY THE ENFORCING AGENCY.
18. COMPLIANCE WITH A LAWFULLY ENACTED STORM WATER MANAGEMENT ORDINANCE

FRAMING NOTES

1. ALL FRAMING AND CARPENTRY SHALL BE DONE IN ACCORDANCE WITH THOSE APPLICABLE SECTIONS OF CHAPTER 23 OF THE LATEST ADOPTED EDITION OF THE CBC AND DETAILS INDICATED ON THE DRAWINGS.
2. ALL STRUCTURAL LUMBER SHALL BE DOUG FIR-LARCH GRADE IN ACCORDANCE WITH THE LATEST EDITION OF "GRADING AND DRESSING RULES #16 OF THE WEST COAST LUMBER INSPECTION BUREAU" AND SHALL HAVE A MOISTURE CONTENT OF 19% MAX OF THE FOLLOWING GRADES:

   RAFTERS AND JOISTS – #2 AND BETTER
   BEAMS – #1
   POSTS – SELECT STRUCTURAL
   STUDS, PLATES, ALL OTHERS – STUD GRADE
   } UNLESS NOTED OTHERWISE

   NOTIFY ENGINEER IF OTHER SPECIES OF WOOD ARE DELIVERED TO THE SITE OR ARE PART OF THE EXISTING BUILDING.
3. WOOD FRAMING MEMBERS (INCLUDING WOOD SHEATHING) THAT REST ON CONCRETE AND ARE LESS THAN 8 INCHES FROM EXPOSED EARTH SHALL BE OF NATURALLY DURABLE OR PRESERVATIVE-TREATED WOOD.
4. STRUCTURAL MEMBER CUTS, NOTCHES, AND BORES SHALL BE PER 1/S-3.0
5. 2x SOLID BLOCK SHALL BE PLACED BETWEEN JOISTS OR RAFTERS AND AT ALL SUPPORTS.
6. ALL BOLTS TO HAVE FLAT WASHERS UNDER HEAD AND NUT AND AT ALL HOLDOWN BOLTS AND ANCHOR BOLTS. ALL BOLT HOLES SHALL BE 1/32" (MIN), 1/16" (MAX) OVER-SIZED (INSPECTOR TO VERIFY). PROVIDE LEAD HOLE 40-70% OF THREADED SHANK DIA. & FULL DIA. FOR SMOOTH SHANK PORTION.
7. ALL PLYWOOD EXPOSED TO WEATHER SHALL BE EXTERIOR GRADE. WOOD STRUCT. PANELS SHALL COMPLY WITH PS1-09 DOUG FIR-LARCH AND/OR PS2-10 OSB.
8. FRAMING SURROUNDING ALL METAL FIREPLACE VENTS SHALL BE CONTINUOUS 2X4 STUDS @ 16" O.C. SHEATHED WITH 1/2" STRUCT 1 PLYWOOD AND WITH DRAFT STOPS @ 10'-0" o.c. MAX. (FOR PLYWOOD NAILING, SEE ROOF NAILING SCHEDULE.)
9. GLU-LAMINATED MEMBERS SHOULD BE FABRICATED IN ACCORDANCE WITH BUILDING DEPARTMENT STANDARDS AND A.I.T.C. 117-79. A CERTIFICATE OF INSPECTION TO BE SUBMITTED TO THE BUILDING DEPARTMENT PRIOR TO ERECTION. SIMPLE SPAN GLU-LAMS ARE TO BE COMBINATION 24F-V4 CANTILEVER GLU-LAMS TO BE COMBINATION 24F-V8.
10. COMPOSITE FRAMING MEMBERS SHALL BE BY TRUSS JOIST WEYERHAEUSER / BOISE CASCADE U.N.O. FOLLOW MANUFACTURER'S RECOMMENDATIONS FOR STORAGE & INSTALLATION.

    MICROLLAM: 1.8E WS MICROLLAM LVL
    PARALLAM / VERSA LAM: 2.0E WS PARALLAM PSL / Fb = 3100psi
    TIMBERSTRAND: TIMBERSTRAND LSL RIMBOARD 1 1/2" WIDE
    1.5E TIMBERSTRAND LSL HEADER 3 1/2" WIDE
11. PROVIDE 2X6 STUDS IN PLUMBING WALLS TO PREVENT EXCESSIVE NOTCHING AND BORING OF STUDS
12. PROVIDE TWO LAYERS OF GRADE D PAPER BETWEEN SHEAR PANEL AND LATH
13. FIRE BLOCKING SHALL BE INSTALLED AT 20 FT. MAX. INTERVALS AND SHALL BE INSTALLED SO THAT THERE WILL NOT BE OPEN SPACES EXCEEDING 100 SQ. FT. WITHIN CONCEALED SPACES OF EXTERIOR WALL FINISH AND OTHER EXTERIOR ARCHITECTURAL ELEMENTS ERECTED OF COMBUSTIBLE CONSTRUCTION.
14. FIRE BLOCK STUD WALLS AND PARTITIONS (HORIZONTALLY AT 10 FT INTERVALS AND VERTICALLY AT THE CEILING AND FLOOR LEVELS), ENCLOSED AND CONCEALED SPACES, AND AT OPENINGS AROUND VENTS, PIPES, DUCTS, CHIMNEYS, BETWEEN ATTIC AND CHIMNEY CHASE, AT STAIR STRINGERS, AND SIMILAR PLACES AT CEILING AND FLOOR LEVELS.
15. FLOOR JOISTS, CEILING JOISTS, AND RAFTERS 12" OR MORE IN DEPTH SHALL BE SUPPORTED LATERALLY BY BRIDGING AT INTERVALS NOT EXCEEDING 8 FT., UNLESS BOTH EDGES ARE HELD IN LINE.

SOILS ENGINEERING

1. THE SOILS REPORT, NUMBER N/A PREPARED BY N/A DATED N/A IS PART OF THESE PLANS AND ALL RECOMMENDATIONS THEREIN SHALL BE COMPLIED WITH.
2. SPREAD FOOTINGS – ALLOWABLE BEARING = 1500 PSF
   CONTINUOUS FOOTINGS – ALLOWABLE = 1500 PSF
   COEFFICIENT OF FRICTION – ALLOWABLE = 0.25
   PASSIVE EARTH PRESSURE – ALLOWABLE = 250 PCF
   EXPANSIVE INDEX = ________
3. CANTILEVER RETAINING WALLS:
   EQUIVALENT FLUID PRESSURE – 35 PCF & 43 PCF
4. RESTRAINED RETAINING WALLS:
   EQUIVALENT FLUID PRESSURE – 35 PCF & 43 PCF
5. THE ABOVE VALUES MAY BE INCREASED BY 1/3 FOR WIND AND SEISMIC LOADS
6. THE ENGINEER HAS INSPECTED THE SUPPORTING SOILS ON THE SITE AND IS KNOWLEDGEABLE OF THE SOILS IN THE AREA. FINDINGS ARE AS FOLLOWS:
   (1) THE EXISTING FOUNDATION APPEARS TO BE IN A SUFFICIENT STRUCTURAL CONDITION TO BE ADEQUATE TO SUPPORT THE PROPOSED STRUCTURE
7. ALL GRADING, SLAB, FOOTING, AND PAD PREPARATION WORK SHALL COMPLY WITH THE RECOMMENDATIONS AS STATED IN THE REFERENCED REPORT ABOVE
8. PRIOR TO THE CONTRACTOR REQUESTING A BUILDING DEPARTMENT FOUNDATION INSPECTION, THE SOILS ENGR SHALL ADVISE THE BUILDING OFFICIAL IN WRITING THAT:
   (1) THE BUILDING PAD WAS PREPARED IN ACCORDANCE WITH THE SOILS REPORT
   (2) THE UTILITY TRENCHES HAVE BEEN PROPERLY BACKFILLED AND COMPACTED
   (3) THE FOUNDATION EXCAVATIONS COMPLY WITH THE INTENT OF THE SOILS REPORT

CONTACT INFORMATION

ALL-TRADE ENGINEERING
SHANE JUDD, P.E.
(805) 552-4000
17 EAST HIGH STREET
MOORPARK, CA 93021

NAILING SCHEDULE — TABLE (2304.10.1)

	ELEMENT/CONNECTION	FASTENER	LOCATION
	ROOF		
1.	Blocking between ceiling joists, rafters or trusses to top plate or other framing below	3 - 8d common (21/2″ × 0.131″) 3-10d box (3"x0.128") 3 - 3″ × 0.131″ nails 3 - 3″ 14 gage staples, 7/16" crown	Toenail each end
	Blocking between rafters or truss not at the wall top plate, to rafter or truss	2 - 8d common (21/2″ × 0.131″) 2 - 3″ × 0.131″ nails 2 - 3″ 14 gage staples	toenail each end
		2-16d common (3 ½"x0.162") 3-3"x0.131" nails 3-3" 14 gage staples	end nail
	Flat blocking to truss and web filler	16d common (3 ½"x0.162") @6" o.c. 3-3"x0.131" nails @ 6" o.c. 3-3" 14 gage staples @ 6" o.c.	Face nail
2.	Ceiling joists to top plate	3-8d common 3-10d box 3-3"x0.131" nails 3-3" 14 gage staples, 7/16" crown	Toenail each joist
3.	Ceiling joist not attached to parallel rafter, laps over partitions (no thrust) (Table and Section2308.7.3.1)	3-16d common 4-10d box 4-3"x0.131" nails 4-3" 14 gage staples, 7/16" crown	Face nail
4.	Ceiling joists attached to parallel rafter (heel joint) (Table and Section2308.7.3.1)	Table 2308.7.3.1	Face nail
5.	Collar tie to rafter	3-10d common 4-10d box 4-3"x0.131" nails 4-3" 14 gage staples, 7/16" crown	Face nail
6.	Rafter or roof truss to top plate (Table and section 2308.7.5)	3-10 common 3-16d box 4-10d box 4-3"x0.131" nails 4-3" 14 gage staples, 7/16" crown	Toenail (c)
7.	Roof rafters to ridge valley or hip rafters; or roof rafter to 2" ridge beam	2-16d common 3-10d box 3-3"x0.131" nails 3-3" 14 gage staples, 7/16" crown	End nail
		3-10d common 3-16d box 4-10d box 4-3"x0.131" nails 4- 3" 14 gage staples, 7/16" crown	Toenail
	WALL		
8.	Stud to Stud (not at braced wall panels)	16d common	24" o.c. face nail
		10d box 3"x0.131" nails 3" 14 gage staples, 7/16" crown	16" o.c. face nail
9.	Stud to stud and abutting studs at intersecting wall **corners (at braced wall panels)**	16d common	16" o.c. face nail
		16d box	12" o.c. face nail
		3"x0.131" nails 3" 14 gage staples, 7/16" crown	12" o.c. face nail
10.	Built-up header	16d common	16" o.c. each edge, face nail
		16d box	12" o.c. each edge, face nail
11.	Continuous header to stud	4-8d common 4-10d box	Toenail
12.	Top plate to top plate	16d common	16" o.c. face nail
		10d box 3"x0.131" nails **3" 14 gage staples, 7/16" crown**	12" o.c. face nail

CONCRETE NOTES

1. ALL CONCRETE SHALL HAVE 2500 psi MINIMUM COMPRESSIVE STRENGTH AT 28 DAYS. ALL GRADE BEAMS SHALL HAVE 3000 psi MINIMUM COMPRESSIVE STRENGTH AT 28 DAYS. ALL PILES SHALL HAVE 4000 psi MINIMUM COMPRESSIVE STRENGTH AT 28 DAYS. CONCRETE SHALL BE MECHANICALLY VIBRATED DURING PLACEMENT. DEPUTY INSPECTION REQUIRED FOR ALL CONCRETE GREATER THAN 3000 psi.
2. THE MINIMUM CEMENT CONTENT SHALL BE 6 SACKS MINIMUM PER CUBIC YARD.
3. THE MAXIMUM CONCRETE SLUMP SHALL BE 4 INCHES, PLUS OR MINUS 1 INCH.
4. CEMENT FOR CONCRETE SHALL BE STANDARD BRAND TYPE II, LOW ALKALI, PER ASTM C-150.
5. AGGREGATE SHALL CONFORM TO ASTM C-33, 1 INCH MAXIMUM SIZE, SIZE NUMBER 67 AGGREGATE. A MINIMUM 3"DIA. HOSE FOR PLACING CONCRETE IS REQUIRED. PEA GRAVEL MIXES ARE NOT ALLOWED.
6. WATER REDUCING AGENTS SHALL BE USED TO REDUCE WATER/CEMENT RATIO.
7. FASTENERS FOR PRESERVATIVE TREATED AND FIRE-RETARDANT-TREATED WOOD SHALL BE OF HOT DIPPED ZINC-COATED GALVANIZED STEEL, STAINLESS STEEL, SILICON BRONZE OR COPPER. THE COATING WEIGHTS FOR ZINC-COATED FASTENERS SHALL BE IN ACCORDANCE WITH ASTM A153. FASTENERS OTHER THAN NAILS, TIMBER RIVETS, WOOD SCREWS, AND LAG SCREWS SHALL BE PERMITTED TO BE OF MECHANICALLY DEPOSITED ZINC-COATED STEEL WITH COATING WEIGHTS IN ACCORDANCE WITH ASTM B695, CLASS 55 MIN.
8. ALL EPOXY USED SHALL BE SIMPSON SET-XP EPOXY LARR #25744. DEPUTY INSP REQ'D
9. ALL HOLDOWN ANCHORS AT SHEARWALLS SHALL BE HELD FIRMLY IN PLACE BY A TEMPLATE PRIOR TO FOUNDATION INSPECTION AND POURING CONCRETE. EXACT HOLDOWN LOCATION MUST BE COORDINATED BETWEEN CONCRETE CONTRACTOR AND FRAMING CONTRACTOR.
10. SOIL COMPACTION REPORT SHALL BE PROVIDED TO THE BUILDING INSPECTOR AT THE JOBSITE PRIOR TO PLACEMENT OF CONCRETE FOR THE FOUNDATION.

12. THE CONTRACTOR AND SUB-CONTRACTOR SHALL VERIFY ALL CONDITIONS SHOWN ON PLANS AT THE SITE PRIOR TO COMMENCING WORK.
13. THE REINFORCING STEEL SHALL BE INTERMEDIATE GRADE, DEFORMED BARS CONFORMING TO A.S.T.M. A-615 GRADE 60. THE PLACING OF REINFORCING STEEL SHALL BE IN ACCORDANCE WITH CHAPTER 19 OF THE 2019 CBC.
14. CRACK CONTROL JOINTS, ONE-QUARTER OF THE SLAB DEPTH, TO BE SAWCUT 10' TO 15' O.C. EACH WAY WITHIN 24 HOURS OF POUR.
15. STEEL PLATE WASHERS SHALL BE A MINIMUM OF 3"X3"X.229" AND SHALL BE PLACED BETWEEN THE FOUNDATION SILL PLATE AND THE NUT
16. HOLD-DOWN ANCHORS MUST BE RE-TIGHTENED JUST PRIOR TO COVERING THE WALL FRAMING
17. A CORROSION-RESISTANT WEEP SCREED IS REQUIRED BELOW STUCCO A MINIMUM OF 4"/2" ABOVE GRADE/SLAB.
18. PROVIDE 5/8" DIAMETER X 10" MINIMUM ANCHOR BOLTS WITH 7" EMBEDMENT SPACED NOT MORE THAN 4 FT. APART AND NOT MORE THAN 12" OR LESS THAN 4" FROM EACH END PIECE
19. MINIMUM CONCRETE STEMWALL THICKNESS IS 7.5"
20. ALL HDU HOLD-DOWNS TO HAVE SDS2.5 SCREWS PER MANUFACTURER'S CATALOG.

NAILING SCHEDULE (CONT'D)

	ELEMENT/CONNECTION	FASTENER	LOCATION
13.	Top plate to top plate, at end joints	8-16d common 12-10d box 12-3"x0.131" nails 12-3" 14 gage staples, 7/16" crown	Each side of end joint, face nail (min 24" lap splice length each side of end joint)
14.	Bottom plate to joist, rim joist, band joist or blocking (not at braced wall panels)	16d common	16" o.c. face nail
		16d box 3"x0.131" nails 3" 14 gage staples, 7/16" crown	12" o.c. face nail
15.	Bottom plate to joist, rim joist, band joist or blocking **at braced wall panels**	2-16d common 3-16d box 4-3"x0.131" nails 4-3" 14 gage staples, 7/16" crown	16" o.c. face nail
16.	Stud to top or bottom plate	4-8d common 4-10d box 4-3"x0.131" nails 4-3" 14 gage staples, 7/16" crown	Toenail
		2-16d common 3-10d box 3-3"x0.131" nails 3-3" 14 gage staples, 7/16" crown	End nail
17.	Top or bottom plate to stud	2-16d common 3-10d box 3-3"x0.131" nails 3-3" 14 gage staples, 7/16" crown	End nail
18.	Top plates, laps at corners and intersections	2-16d common 3-10d box 3- 3"x0.131" nails 3-3" 14 gage staples, 7/16" crown	Face nail
19.	1" brace to each stud and plate	2-8d common 2-10d box 2- 3"x0.131" nails 2- 3" 14 gage staples, 7/16" crown	Face nail
20.	1"x6" sheathing to each bearing	2-8d common 2-10d box	Face nail
21.	1"8" and wider sheathing to each bearing	3-8d common 3-10d box	Face nail
	FLOOR		
22.	Joist to sill, top plate, or girder	3-8d common 3-10d box 3-3"x0.131" nails 3-3" 14 gage staples, 7/16" crown	Toenail
23.	Rim joist, band joist, or blocking to top plate, sill or other framing below	8d common 10d box 3"x0.131" nails 3" 14 gage staples, 7/16" crown	6" o.c., toenail
24.	1"x6" subfloor or less to each joist	2-8d common 2-10d box	Face nail
25.	2" subfloor to joist or girder	2-16d common	Face nail
26.	2" plank	2-16d common	Each bearing, face nail
27.	Built up girders and beams, 2" lumber layers	20d common	32" o.c. face nail at top and bottom staggered on opposite sides
		10d box 3"x0.131" nails 3" 14 gage staples, 7/16" crown	24" o.c. face nail at top and bottom staggered on opposite sides
		<u>And</u> 2-20d common 3-10dbox 3- 3"x0.131" nails 3- 3" 14 gage staples, 7/16" crown	Ends and at each splice, face nail
28.	Ledger strip supporting joists or rafters	3-16d common 4-10d box 4-3"x0.131" nails 4-3" 14 gage staples, 7/16" crown	Each joist or rafter, face nail
29.	Joist to band joist or rim joist	3-16d common 4-10d box 4-3"x0.131" nails 4-3" 14 gage staples, 7/16" crown	End nail
30.	Bridging or blocking to joist, rafter or truss	2-8d common	Each end, toenail
		2-10d box 2-3"x0.131" nails 2-3" 14 gage staples, 7/16" crown	
	WOOD STRUCTURAL PANS, SUB FLOOR, ROOF AND INTERIOR WALL SHEATHING TO FRAMING AND PARTICLEBOARD WALL SHEATHING TO FRAMING (a)		
31.	3/8"-1/2"	6d common or deformed (2"x0.113") (subfloor and wall) 8d box or deformed (roof) 2 3/8"x0.113" nail (subfloor and wall)	6" edge 12" intermediate supports
		1 ¾" 16 gage staple, 7/16" crown 2 3/8" x0.113" nail (roof)	4" edge 8" intermediate supports
		1 ¾"16 gage staple, 7/16" crown (roof)	3" edge 6" intermediate supports
32.	19/32" –3/4"	8d common 6d deformed	6" edge 12" intermediate supports
		2 3/8"x0.113 nail 2" 16" gage staple, 7/16" crown	4" edge 8" intermediate supports
33.	7/8" – 1/4"	10d common 8d deformed	6" edge 12" intermediate supports
	OTHER EXTERIOR WALL SHEATHING		
34.	1/2" fiberboard sheathing(b)	1 ½" galvanized roof nail 1 ¼" 16 gage staple with 7/16" or 1" crown	3" edge 6" intermediate supports
35.	25/32" fiberboard sheathing (b)	1 ¾" galvanized roof nail 1 ½" 16 gage staple with 7/16" or 1" crown	3" edge 6" intermediate supports
	WOOD STRUCTURAL PANELS, COMBINATION SUBFLOOR UNDERLAYMENT TO FRAMING		
36.	¾" and less	8d common 6d deformed	6" edge 12" intermediate supports
37.	7/8"-1"	8d common 8d deformed	6" edge 12" intermediate supports
38.	1 1/8"-1 ¼"	10d common 8d deformed	6" edge 12" intermediate supports
	PANEL SIDING TO FRAMING		
39.	½" or less	6d corrosion-resistant siding 6d corrosion-resistant casing	6" edge 12" intermediate supports
40.	5/8"	8d corrosion-resistant siding 8d corrosion-resistant casing	6" edge 12" intermediate supports
	INTERIOR PANELING		
41.	¼"	4d casing 4d finish	6" edge 12" intermediate supports
42.	3/8"	6d casing 6d finish	6" edge 12" intermediate supports

For SI: 1 inch = 25.4 mm.
a. Nails spaced at 6 inches at intermediate supports where spans are 48" or more. For nailing of wood structural panel and particleboard diaphragms and shear walls, refer to Section 2305. Nails for wall sheathing are permitted to be common, box or casing.
b. Spacing shall be 6 inches on center on the edges and 12 inches on center at intermediate supports for nonstructural applications. Panel supports at 16 inches (20 inches if strength axis in the long direction of the panel, unless otherwise marked).

THESE DRAWINGS AND SPECIFICATIONS ARE THE PROPERTY AND COPYRIGHT OF LAUTERBACH & ASSOCIATES, ALL RIGHTS RESERVED, AND SHALL NOT BE USED ON ANY OTHER WORK OR PROJECT EXCEPT BY WRITTEN AGREEMENT WITH LAUTERBACH & ASSOCIATES. WRITTEN DIMENSIONS SHALL TAKE PRECEDENCE OVER SCALED DIMENSIONS AND SHALL BE VERIFIED ON THE JOB SITE, ANY DISCREPANCY SHALL BE BROUGHT TO THE NOTICE OF LAUTERBACH & ASSOCIATES PRIOR TO COMMENCEMENT OF ANY WORK.

LAUTERBACH & ASSOCIATES
ARCHITECTS INC.
David C. Kesterson, Architect • Ilona Scott, Architect • Mark S. Pettit, Architect
300 MONTGOMERY AVENUE, OXNARD, CALIFORNIA 93036 | 805-988-0912 | FAX 805-981-4510 | www.la-arch.com

REGISTERED PROFESSIONAL ENGINEER SHANE DENNIS JUDD No. M34632 MECHANICAL STATE OF CALIFORNIA

REGISTERED PROFESSIONAL ENGINEER SHANE DENNIS JUDD No. C70891 CIVIL STATE OF CALIFORNIA

FASHION PARK APARTMENTS
234, 251 & 257 FASHION PARK
OXNARD, CA, 93036

CITY OF OXNARD HOUSING AUTHORITY
435 S. D STREET
OXNARD, CALIFORNIA 93030

NO	DESCRIPTION	DATE
1	SUBMIT	4/8/2020

ISSUE

JOB NO. 20-190209

DRAWN BY:
CHECKED BY:
PROJECT MANAGER:
PRINT DATE: 2/15/19 8:36:51 AM

GENERAL NOTES

S-1.0

STRUCTURAL GENERAL NOTES (CONTINUED)

2019 CRC DESIGN LOADS

1. (R301 CRC) FLOOR LIVE LOADS:
   UNIFORM FLOOR LOAD: 40 psf
   UNIFORM DECK LOAD: 60 psf
   CONCENTRATED LOAD: 300 lb
   NO LIVE LOAD REDUCTIONS TAKEN

2. (R301 CRC) CEILING LIVE LOADS:
   UNINHABITABLE ATTICS WITHOUT STORAGE: 10 psf
   UNINHABITABLE ATTICS WITH LIMITED STORAGE: 20 psf
   HABITABLE ATTICS: 30 psf

3. (R301 CRC) ROOF LIVE LOAD: 20 psf
   NO LIVE LOAD REDUCTIONS TAKEN

4. (CBC 1609 & ASCE 7-10) WIND DESIGN DATA:
   ULTIMATE WIND SPEED (3-MILE GUST): 110
   NOMINAL WIND SPEED (3-MILE GUST): 38
   WIND EXPOSURE: C
   INTERNAL PRESSURE COEFFICIENT: 0.18

5. (CBC 1613 & ASCE 7-10) EARTHQUAKE DESIGN DATA:
   SEISMIC IMPORTANCE FACTOR I: 1.0
   RISK CATEGORY: II
   SPECTRAL RESPONSE ACCELERATIONS: Ss=1.947 S1=0.686
   SITE CLASS: D
   SPECTRAL RESPONSE COEFFICIENTS: Sds=1.298 Sd1=0.686
   SEISMIC DESIGN CATEGORY: D
   SEISMIC-FORCE RESISTING SYSTEM: WOOD SHEAR WALLS, ORDINARY REINFORCED CONCRETE S.W., CANTILEVER COLUMNS
   DESIGN BASE SHEAR: V=0.185W, V=0.301W, V=0.964W
   SEISMIC RESPONSE COEFFICIENT: Cs=0.200, Cs=0.325, Cs=1.038
   RESPONSE MODIFICATIONS FACTOR: R=6.5, R=4.0, R=1.25
   REDUNDANCY FACTOR: p=1.3 (12.3.4.2 ASCE)
   ANALYSIS PROCEDURE USED: EQUIVALENT LATERAL FORCE

CONTRACTOR RESPONSIBILITY

1. EACH CONTRACTOR RESPONSIBLE FOR THE CONSTRUCTION OF A MAIN WIND OR SEISMIC FORCE RESISTING SYSTEM, DESIGNATED SEISMIC SYSTEM OR A WIND OR SEISMIC RESISTING COMPONENT LISTED IN THE STATEMENT OF SPECIAL INSPECTIONS SHALL SUBMIT A WRITTEN STATEMENT OF RESPONSIBILITY TO THE BUILDING OFFICIAL AND THE OWNER PRIOR TO THE COMMENCEMENT OF WORK ON THE SYSTEM OR COMPONENT. THE CONTRACTOR'S STATEMENT OF RESPONSIBILITY SHALL CONTAIN THE FOLLOWING:
   (1) ACKNOWLEDGEMENT OF AWARENESS OF THE SPECIAL REQUIREMENTS CONTAINED IN THE STATEMENT OF SPECIAL INSPECTIONS
   (2) ACKNOWLEDGEMENT THAT CONTROL WILL BE EXERCISED TO OBTAIN CONFORMANCE WITH THE CONSTRUCTION DOCUMENTS APPROVED BY THE BUILDING OFFICIAL
   (3) PROCEDURES FOR EXERCISING CONTROL WITHIN THE CONTRACTOR'S ORGANIZATION, THE METHOD OF FREQUENCY OF REPORTING AND THE DISTRIBUTION OF THE REPORTS
   (4) IDENTIFICATION AND QUALIFICATION OF THE PERSON(S) EXERCISING SUCH CONTROL AND THEIR POSITION(S) IN THE ORGANIZATION

2. BY BEGINNING CONSTRUCTION ON THIS BUILDING, THE CONTRACTOR AGREES HE HAS THOROUGHLY REVIEWED THESE PLANS AND BELIEVES HE CAN BUILD THIS STRUCTURE AS THE PLANS ARE DRAWN AND DETAILED

ABBREVIATIONS

ABBR.	CORRECT SPELLING
A.B.	ANCHOR BOLT
B., BOT.	BOTTOM
B.O.B.	BOTTOM OF BEAM
B.N.	BOUNDARY NAILING
BLK'G	BLOCKING
C.J.	CEILING JOIST
CMU	CONCRETE MASONRY UNIT
CONC.	CONCRETE
CONT.	CONTINUOUS
D.	DEEP
D.F.	DOUGLAS FIR
DBL.	DOUBLE
DIA.	DIAMETER
EA.	EACH
E.N.	EDGE NAILING
E.W.	EACH WAY
F.J.	FLOOR JOIST
FT.	FEET
GLB	GLU-LAM BEAM
HOR., HORIZ.	HORIZONTAL
IN.	INCH
K.P.	KING POST
LT. WT.	LIGHT WEIGHT
M.B.	MACHINE BOLT
M.L.	MICROLLAM
MAX.	MAXIMUM
MIN.	MINIMUM
O.C.	ON CENTER
O/	OVER
P.C.	PIPE COLUMN
P.L.	PARALLAM
P.T.	POST-TENSION
PSR	PLYWOOD SPAN RATING
R.R.	ROOF RAFTER
SD.	SIDE
S.N.	SILL NAILING
SEL. STR.	SELECT STRUCTURAL
SIM.	SIMILAR
STAG.	STAGGERED
STD.	STANDARD
STL.	STEEL
T.	TOP
THK.	THICK
TJI	TRUS JOIST OR EQUIVALENT
TPL.	TRIPLE
TRIM	TRIMMER
TYP.	TYPICAL
U.N.O.	UNLESS NOTED OTHERWISE
U.W.A.	UNDER WALL ABOVE
VERT.	VERTICAL
W.	WIDE
W/	WITH

STRUCTURAL OBSERVATIONS

1. THE OWNER SHALL EMPLOY THE ENGINEER REGISTERED IN THE STATE OF CALIFORNIA WHO IS RESPONSIBLE FOR THE STRUCTURAL DESIGN TO DO STRUCTURAL OBSERVATION. 72 HOURS NOTICE IS REQUIRED FOR MEETINGS AND OBSERVATIONS.

2. NAME AND NUMBER OF ENGINEER RESPONSIBLE FOR THE STRUCTURAL DESIGN: SHANE JUDD #C70991

3. NAME AND NUMBER OF THE ENGINEERS THAT MAY BE DESIGNATED TO DO THE STRUCTURAL OBSERVATION:
   SHANE JUDD #C70991

4. THE ENGINEER RESPONSIBLE FOR THE STRUCTURAL OBSERVATION, THE CONTRACTOR, AND APPROPRIATE SUBCONTRACTORS SHALL HOLD A PRE-CONSTRUCTION MEETING TO REVIEW THE DETAILS OF THE STRUCTURAL SYSTEM TO BE STRUCTURALLY OBSERVED.

5. AT THE CONCLUSION OF THE WORK INCLUDED IN THE PERMIT, THE STRUCTURAL OBSERVER SHALL SUBMIT TO THE BUILDING OFFICIAL A WRITTEN STATEMENT THAT THE SITE VISITS HAVE BEEN MADE AND IDENTIFY ANY REPORTED DEFICIENCIES THAT, TO THE BEST OF THE STRUCTURAL OBSERVER'S KNOWLEDGE, HAVE NOT BEEN RESOLVED.

6. THE FOLLOWING ITEMS ARE TO BE OBSERVED BY THE ENGINEER DURING STRUCTURAL OBSERVATION:

   FOUNDATION:
   a) FOOTING REINFORCEMENT PLACEMENT
   b) SLAB REINFORCEMENT LAYOUT AND SPACING
   c) SHRINKAGE REINFORCEMENT
   ROOF NAILING:
   a) RAFTER AND PLYWOOD INSTALLATION
   b) ROOF DIAPHRAGM NAILING
   c) SHEAR TRANSFER FROM ROOF TO WALLS
   d) FRAMING SUPPORTING ROOF

   EXTERIOR FRAMING PRIOR TO PREWRAP:
   a) UPPER FLOOR SHEAR WALL NAILING AND HOLDOWNS
   b) LOWER FLOOR SHEAR WALL NAILING, AND HOLDOWNS AND ANCHOR BOLTS
   c) FLOOR TO FLOOR SHEAR TRANSFER

   SEISMIC/WIND FORCE RESISTING SYSTEM:
   WOOD:
   a) DIAPHRAGMS AND SHEAR WALLS WHERE THE NAILING IS 4"O.C. OR LESS
   b) DRAG CONNECTIONS, DIAPHRAGM CHORDS
   c) BEAMS & PLATES SUPPORTING HOLD-DOWNS & UPLIFT CONNECTORS

   FINAL OBSERVATION:
   a) FLOOR DRAG NAILING
   b) ALL STRUCTURAL DETAILS

7. ENGINEER OF RECORD OR THE DESIGNATED ENGINEER SHALL SUBMIT REPORTS ON THE PRESCRIBED FORM BY THE COUNTY

CONCRETE MASONRY NOTES

MATERIALS:
1. CONCRETE BLOCKS: CONFORMS TO ASTM C90.44 NORMAL WEIGHT
2. REINFORCEMENT: CONFORMS TO ASTM A615, MINIMUM 60 GRADE
3. CONCRETE: MIN. COMPRESSIVE STRENGTH SHALL BE 2500 PSI AT 28 DAYS FOR FOOTINGS AND 3000 PSI AT 28 DAYS FOR STEM WALLS

GENERAL SPECIFICATIONS:
1. CONTRACTOR SHALL VERIFY ALL DIMENSIONS AND CONDITIONS ON THE JOB. THE CONTRACTOR SHALL BE RESPONSIBLE FOR THE TEMPORARY SUPPORT OF ANY VERTICAL EARTH CUTS OVER 4'-0" IN HEIGHT.
2. ALL CELLS BELOW BACKFILL AND ALL OTHER CELLS WHICH CONTAIN REINFORCEMENT TO BE FILLED WITH GROUT AND CONSOLIDATED. U.N.O.
3. MORTAR SHALL BE TYPE S CONSISTING OF PORTLAND CEMENT, HYDRATED LIME, SAND AND POTABLE WATER WITH NO SUBSTITUTIONS. 2000 PSI MIN. SEE BELOW FOR MIN. MIX
4. REINFORCEMENT TO BE SPLICED 48 DIAMETERS MIN AND NO LESS THAN 24".
5. REINFORCEMENT SHALL BE ACCURATELY PLACED AND SECURED SO THAT IT WILL NOT BE DISPLACED. ALL CONCRETE SHALL BE PROPERLY CONSOLIDATED DURING PLACEMENT. ALL REINFORCING STEEL AND EMBEDDED ITEMS SHALL BE SECURELY TIED IN PLACE TO PREVENT DISPLACEMENT DURING GROUT PLACEMENT.
6. GROUT SHALL BE CONSOLIDATED TO INSURE A GOOD CONTACT WITH REINFORCEMENT AND TO ELIMINATE ROCK POCKETS AND VOIDS. THE CONTRACTOR SHALL TAKE ADEQUATE PRECAUTIONS FOR MIXING, PLACING, FINISHING, CURING AND PROTECTING CONCRETE DURING UNFAVORABLE WEATHER CONDITIONS.
7. POURING LIFTS SHALL BE 6'-0" MAX WITH CLEANOUTS PROVIDED FOR POURS OVER 5'-0".
8. POUR ALL FOOTINGS AGAINST SOLID NATURAL UNDISTURBED EARTH OR COMPACTED FILL COMPACTED TO 90% RELATIVE DENSITY.
9. USE 4" DIAMETER PERFORATED PVC DRAIN. PVC PIPE MUST DRAIN TO DOWN SLOPE AND BE NO LONGER THAN 40' WITHOUT SPECIAL DESIGN.
10. BACKFILL WITH 6" WIDTH OF SAND OR CLEAN COARSE GRAVEL AND COVER WITH A 12" THICK COMPACTED FILL BLANKET AT THE SURFACE. BACKFILL SHALL NOT BE PLACED UNTIL 14 DAYS AFTER GROUTING.
11. ALL WALLS SHALL BE WATERPROOFED ON THE SOIL SIDE BELOW FINISH GR.
12. CONCRETE BLOCK UNITS TO BE STAGGERED (RUNNING BOND).
13. CONCRETE BLOCK UNITS TO BE STANDARD 8"X8"X16" UNITS CONFORMING TO ASTM C90, GRADE N, TYPE II MIN. AND UBC STANDARD 21-4 UNO.
14. ALL FOOTINGS TO BE 12" MIN. INTO NATURAL GROUND.
15. IF 2500 PSI CONCRETE MIX IS SITE MIXED, USE 1 PART PORTLAND CEMENT, 2 PARTS SAND, 3 PARTS 1" ROCK W/A MAXIMUM OF 7 GALLONS OF WATER PER SACK OF CEMENT.
16. GROUT MIX FOR CONCRETE BLOCK WALL TO BE 2000 PSI, 1 PART PORTLAND CEMENT TO 3 PARTS SAND TO WHICH MAY BE ADDED NOT MORE THAN 1/10 PART LIME. SUFFICIENT WATER TO BE ADDED TO PRODUCE CONSISTENCY FOR POURING WITHOUT SEGREGATION OF THE CONSTITUENTS. GROUT MAY CONTAIN PEA GRAVEL TO A MAX. SIZE OF 3/8".
17. MORTAR MIX FOR CONCRETE BLOCKS TO BE 1 PART CEMENT TO 1/4 HYDRATED LIME TO 3 1/2 PARTS DAMP LOOSE SAND.

SPECIAL INSPECTIONS

1. THE OWNER OR REGISTERED DESIGN PROFESSIONAL IN RESPONSIBLE CHARGE ACTING AS THE OWNERS AGENT SHALL EMPLOY ONE OR MORE SPECIAL INSPECTORS DURING CONSTRUCTION ON THE TYPES OF WORK LISTED UNDER SECTION 1705 OF THE 2019 CBC. THE SPECIAL INSPECTOR SHALL BE A QUALIFIED PERSON WHO SHALL DEMONSTRATE COMPETENCE, TO THE SATISFACTION OF THE BUILDING OFFICIAL, FOR INSPECTION OF THE PARTICULAR TYPE OF CONSTRUCTION OR OPERATION REQUIRING SPECIAL INSPECTION.

2. SPECIAL INSPECTORS SHALL KEEP RECORDS OF INSPECTIONS. THE SPECIAL INSPECTOR SHALL FURNISH INSPECTION REPORTS TO THE BUILDING OFFICIAL, AND TO THE REGISTERED DESIGN PROFESSIONAL IN RESPONSIBLE CHARGE. REPORTS SHALL INDICATE THAT THE WORK INSPECTED WAS DONE IN CONFORMANCE TO APPROVED CONSTRUCTION DOCUMENTS. DISCREPANCIES SHALL BE BROUGH TO THE IMMEDIATE ATTENTION OF THE CONTRACTOR FOR CORRECTION. IF THE DISCREPANCIES ARE NOT CORRECTED, THE DISCREPANCIES SHALL BE BROUGHT TO THE ATTENTION OF THE BUILDING OFFICIAL AND TO THE REGISTERED DESIGN PROFESSIONAL IN RESPONSIBLE CHARGE PRIOR TO THE COMPLETION OF THAT PHASE OF WORK. A FINAL REPORT DOCUMENTING REQUIRED SPECIAL INSPECTION AND CORRECTION OF ANY DISCREPANCIES NOTED IN THE INSPECTIONS SHALL BE SUBMITTED AT A POINT IN TIME AGREED UPON BY THE PERMIT APPLICANT AND THE BUILDING OFFICIAL PRIOR TO START OF WORK.

3. THE FOLLOWING ITEMS REQUIRE SPECIAL INSPECTION:

   THE WIND AND SEISMIC FORCE RESISTING SYSTEMS ARE TO BE INSPECTED/OBSERVED BY THE ENGINEER OF RECORD (SEE STRUCT OBSERVATIONS)

   STEEL CONSTRUCTION AND FIELD WELDING (SEE TABLE 1705.21 & 1705.12.1)
   PIER FOUNDATIONS (SEE TABLE 1705.8)
   PILE FOUNDATIONS (SEE TABLE 1705.8)
   EPOXY USED FOR ANCHOR BOLTS, HOLDOWNS, AND STRUCTURAL RETROFITS
   CONCRETE CONSTRUCTION (SEE TABLE 1705.3)
   SOILS (SEE TABLE 1705.4)
   ANCHORAGE OF ELECTRICAL EQUIPMENT IN SDC E AND F
   MASONRY CONSTRUCTION (SEE TABLE 1705.4)
   CONCRETE WHERE Fc' EXCEEDS 2500 psi
   POST-INTALLED ANCHORS (SEE TABLE 1705.1.1)
   DIAPHRAGMS AND SHEAR WALLS WHERE THE NAILING IS 4"O.C. OR LESS
   EXTERIOR WALL PANELS AND THEIR ANCHORAGE
   SUSPENDED CEILINGS AND THEIR ANCHORAGE
   ACCESS FLOORS AND THEIR ANCHORAGE
   STEEL STORAGE RACKS 8 ft OR GREATER AND THEIR ANCHORAGE

   SPECIAL CASES (WHEN ORDERED BY THE BUILDING OFFICIALS)

4. SEE THE ADJACENT STATEMENTS OF SPECIAL INSPECTIONS FOR SPECIFIC REQUIREMENTS OF EACH TYPE OF SPECIAL INSPECTION

STATEMENT OF SPECIAL INSPECTIONS

TABLE 1705.3
REQUIRED VERIFICATION AND INSPECTION OF CONCRETE CONSTRUCTION

VERIFICATION AND INSPECTION	CONTINUOUS	PERIODIC	REFERENCED STANDARDa	IBC REFERENCE
1. Inspection of reinforcing steel, including prestressing tendons, and placement.	—	X	ACI 318: 3.5, 7.1-7.7	1910.4
2. Inspection of reinforcing steel welding in accordance with Table 1705.2.2, Item 2b.	—	—	AWS D1.4 ACI 318: 3.5.2	—
3. Inspection of anchors cast in concrete where allowable loads have been increased or where strength design is used.	—	X	ACI 318: D.9.2	1908.5
4. Inspection of anchors post-installed in hardened concrete membersb				
a. Adhesive anchors installed in horizontally or upwardly inclined orientations to resist sustained tension loads.	X		ACI 318:D.9.2.4	—
b. Mechanical anchors and adhesive anchors not defined in 4.a.		X	ACI 318: D.9.2	—
5. Verifying use of required design mix.	—	X	ACI 318: Ch. 4, 5.2-5.4	1904.2, 1910.2, 1910.3
6. At the time fresh concrete is sampled to fabricate specimens for strength tests, perform slump and air content tests, and determine the temperature of the concrete.	X		ASTM C 172 ASTM C 31 ACI 318: 5.6, 5.8	1910.10
7. Inspection of concrete and shotcrete placement for proper application techniques.	X	—	ACI 318: 5.9, 5.10	1910.6, 1910.7, 1910.8
8. Inspection for maintenance of specified curing temperature and techniques.	—	X	ACI 318: 5.11-5.13	1910.9
9. Inspection of prestressed concrete:				
a. Application of prestressing forces.	X	—	ACI 318: 18.20	—
b. Grouting of bonded prestressing tendons in the seismic force-resisting system.	X		ACI 318: 18.18.4	
10. Erection of precast concrete members.	—	X	ACI 318: Ch. 16	—
11. Verification of in-situ concrete strength, prior to stressing of tendons in post-tensioned concrete and prior to removal of shores and forms from beams and structural slabs.	—	X	ACI 318: 6.2	—
12. Inspect formwork for shape, location and dimensions of the concrete member being formed.	—	X	ACI 318: 6.1.1	—

For SI: 1 inch = 25.4 mm.
a. Where applicable, see also Section 1705.11, Special inspections for seismic resistance.
b. Specific requirements for special inspection shall be included in the research report for the anchor issued by an approved source in accordance with ACI 355.2, D.9.2 in ACI 318, or other qualification procedures. Where specific requirements are not provided, special inspection requirements shall be specified by the registered design professional and shall be approved by the building official prior to the commencement of the work.

TABLE 1705.2.2
REQUIRED VERIFICATION AND INSPECTION OF STEEL CONSTRUCTION OTHER THAN STRUCTURAL STEEL

VERIFICATION AND INSPECTION	CONTINUOUS	PERIODIC	REFERENCED STANDARDa
1. Material verification of cold-formed steel deck:			
a. Identification markings to conform to ASTM standards specified in the approved construction documents.	—	X	Applicable ASTM material standards
b. Manufacturer's certified test reports.	—	X	
2. Inspection of welding:			
a. Cold-formed steel deck:			
1) Floor and roof deck welds.	—	X	AWS D1.3
b. Reinforcing steel:			
1)Verification of weldability of reinforcing steel other than ASTM A 706.	—		AWS D1.4 ACI 318: Section 3.5.2
2) Reinforcing steel resisting flexural and axial forces in intermediate and special moment frames, and boundary elements of special structural walls of concrete and shear reinforcement.	X	—	
3) Shear reinforcement.	X	—	
4) Other reinforcing steel.	—		

For SI: 1 inch = 25.4 mm.

STATEMENT OF SPECIAL INSPECTIONS (CONTINUED)

Table 8-a Location and Frequencies of bolting inspections

Inspection Tasks Prior to Bolting	QC Task	QC Doc.	QA Task	QA Doc.
Proper bolt selected for the joint detail	O	-	O	-
Proper bolting procedure selected for joint detail	O	-	O	-
Connecting elements are fabricated properly, including the appropriate faying surface condition and hole preparation, if specified, meets appliable requirements	O	-	O	-
Pre-installation verification testing conducted for fastener assemblies and method used.	P	D	O	D
Proper storage provided for bolts, nuts, washers, and other fastener components.	O	-	O	-
Inspection Tasks During Bolting	**QC Task**	**QC Doc.**	**QA Task**	**QA Doc.**
Fastener assemblies placed in all holes and washers (if required) are properly positioned	O	-	O	-
Joint bought to a snug tight condition prior to pretensioning operation	O	-	O	-
Fastener component not turned by the wrench prevented from rotating	O	-	O	-
Bolts are pretensioned progressing systematically from most rigid point toward free edges	O	-	O	-
Inspection Tasks After Bolting	**QC Task**	**QC Doc.**	**QA Task**	**QA Doc.**
Document accepted and rejected connections	P	D	P	D

Table 8-b Location and Frequencies of welding inspections

Visual Inspection Tasks Before Welding	QC Task	QC Doc.	QA Task	QA Doc.
Material Identification (Type/Grade)	O	-	O	-
Welder identification system	O	-	O	-
Fit-up of Grove Welds (including joint geometry) - Joint preparation - Dimensions (alignment, root opening, root face, bevel) - Cleanliness (condition of steel surface) - Tacking (tack weld quality and location) - Backing type and fit (if applicable)	P/O**	-	O	-
Configuration and finish of access holes	O	-	O	-
Fit-up of fillet welds - Dimensions (alignment, gaps at root) - Cleanliness (condition of steel surfaces) - Tacking (tack weld quality and location)	P/O**		O	

** Following performance of this inspection task for ten welds to be made by a given welder, with the welder demonstrating adequate understanding of the requirements and possession of skills and tools to verify these items, the Perform designation of this task shall be reduced to Oberve, and the welder shall perform this task. Should the inspector determine that the welder has discontinued adequate performance of this task, the task shall be returned Perform until such time as the inspector has reestablished adequate assurance that the welder will perform the inspection tasks listed.

Visual Inspection Tasks During Welding	QC Task	QC Doc.	QA Task	QA Doc.
WPS followed - Settings on welding equipment - Travel Speed - Selected welding materials - Shielding gas type/flow rate - Preheat applied - Interpass temperature manitained (min./max.) - Proper position (F,V,H,OH) - Intermix of filler metals avoided unless approved	O	-	O	-
Use of qualified welders	O	-	O	-
Control and handling of welding consumables - Packaging - Exposure control	O	-	O	-
Envirnoment conditions - Wind speed within limits - Precipitation and temperature	O	-	O	-
Welding techniques - Interpass and final cleaning - Each pass within profile limitations - Each pass meets quality requirements	O		O	
No welding over cracked tacks	O	-	O	-
Visual Inspection Tasks After Welding	**QC Task**	**QC Doc.**	**QA Task**	**QA Doc.**
Welds cleaned	O	-	O	-
Verify size, length, and location of welds	P	-	P	-
Visually inspect welds to acceptance criteria - Crack prohibition - Weld/base-metal fusion - Crater cross-section - Weld profiles - Weld size - Undercut - Porosity	P	D	P	D
Placement of reinforcing or contouring fillet welds (if required)	P	D	P	D
Backing removed, weld tabs removed and finished, and fillet welds added (if required)	P	D	P	D
Repair activities	P	-	P	D

Table 8-c Location and Frequencies of other inspections

Other Inspection Task	QC Task	QC Doc.	QA Task	QA Doc.
Reduced beam section (RBS) requirements, if appliable - contour and finish - dimensional tolerances	P	D	P	D
Protected zone - no holes and unapproved attachments made by fabricator or erector, as applicable	P	D	P	D

The following entries are used in the tables:
- Observe (O) - The inspector shall observe these functions on a random, daily basis. Welding operations need not be delayed pending observations.
- Perform (P) - These inspections shall be performed prior to the final acceptance of the item. Where a task is noted to be performed by both OC and OA, it shall be permitted to coordinate the inspection function between QC and QA so that the inspection functions need be performed by only one party. Where QA is to rely upon inspection functions performed by QC, the approval of the engineer of record and the authority having jurisdiction is required.
- Document (D) - The inspector shall prepare reports indicating that the work has been performed in accordance with the contract documents. The report need not provide detailed measurements for joint fit-up, WPS settings, completed welds, or other individual items listed in the Tables of 8-a, 8-b, 8-c. For shop fabrication, the report shall indicate the piece mark of the piece inspected. For field work, the report shall indicate the reference gride lines and floor or elevation inspected. Work not in compliance with the contract documents and wether the noncompliance has been satisfactorilly repaired shall be noted in the inspection report.

TABLE 1705.6
REQUIRED VERIFICATION AND INSPECTION OF SOILS

VERIFICATION AND INSPECTION	CONT.	PER.
1. Verify materials below shallow foundations are adequate to achieve the design bearing capacity.		X
2. Verify excavations are extended to proper depth and have reached proper material.		X
3. Perform classification and testing of compacted fill materials.		X
4. Verify use of proper materials, densities and lift thicknesses during placement and compaction of controlled fill.	X	
5. Prior to placement of controlled fill, inspect subgrade and verify that site has been prepared properly.		X

STRUCTURAL TESTING FOR SEISMIC RESISTANCE

1. (1708.4 CBC) BASE METAL THICKER THAN 1.5 INCHES, WHERE SUBJECT TO THROUGH-THICKNESS WELD SHRINKAGE STRAINS, SHALL BE ULTRASONICALLY TESTED FOR DISCONTINUITIES BEHIND AND ADJACENT TO SUCH WELDS AFTER JOINT COMPLETION

STEEL NOTES

1. THE LABOR, MATERIALS & EXECUTION REQUIRED FOR ALL STEEL WORK AS INDICATED ON DRAWINGS SHALL BE IN ACCORDANCE WITH THOSE APPLICABLE SECTIONS OF CHAPTER 22 OF THE 2019 C.B.C.
2. STRUCTURAL STEEL & MISCELLANEOUS STEEL SHALL CONFORM TO A.S.T.M. A-36. PIPE COLUMNS SHALL CONFORM TO A.S.T.M. A-53 GRADE "B". BOLTS SHALL CONFORM TO A.S.T.M. SPECIFICATION A-307 FOR WOOD & A-325x FOR CONCRETE AND STEEL.
3. ALL WELDS SHALL BE DONE IN AN APPROVED SHOP IN ACCORDANCE WITH AWS D1.1-94. ALL FIELD WELDING SHALL BE PERFORMED BY A CERTIFIED WELDER & BE CONTINUOUSLY INSPECTED BY AN APPROVED DEPUTY INSPECTOR.
4. WELDING SHALL BE DONE BY ELECTRIC SHIELDED ARC PROCESS USING E-70XX ELECTRODES.
5. STRUCTURAL STEEL NOT ENCASED IN CONCRETE SHALL BE PAINTED WITH ONE COAT OF RED OXIDE PRIMER.
6. Wx SECTIONS OF STRUCTURAL STEEL FOR MOMENT FRAMES SHALL CONFORM WITH ASTM A-992.

STRUCTURAL OBSERVATION PROGRAM
AND DESIGNATION OF THE
STRUCTURAL OBSERVER

PROJECT ADDRESS: 2228 CAREFUL AVE. AGOURA HILLS   PERMIT APPL. NO.: ______

Description of Work: RESIDENCE

Owner: MR.GENCHI & MS.ARMIJO Architect: CLEARLIGHT ARCH. Engineer: SHANE JUDD

STRUCTURAL OBSERVATION
(only checked items are required)

Firm or Individual to be responsible for the Structural Observation:
Name: ALL-TRADE Phone: 805-552-4000 Calif. Registration: C70991

FOUNDATION	WALL	FRAME	DIAPHRAGM
☐ Footing, Stem Walls, Piers	☐ Concrete	☐ Steel Moment Frame	☐ Concrete
☐ Mat Foundation	☐ Masonry	☐ Steel Braced Frame	☐ Masonry
☐ Caisson, Piles, Grade Beams	☐ Wood	☐ Concrete Moment Frame	☐ Wood
☐ Stepping/Retaining Foundation, Hillside Special Anchors	☐ Others:	☐ Masonry Wall Frame	☐ Others:
☐ Concrete Slab		☐ Others: CANT. COL.	

DECLARATION BY OWNER
I, the Owner of the project, declare that the above listed form or individual is hired BY ME to be the Structural Observer.

Signature ______ Date ______

DECLARATION BY ARCHITECT OR ENGINEER OF RECORD (required if the Structural Observer is different from the Architect or Engineer of Record)

I, the Architect or Engineer of record for the project, declare that the above listed firm or individual is designated by me to be responsible for the Structural Observation.

Signature   C70991 License No.   4/7/2020 Date

SI/Form.08 (Part 2) (Rev. 6/1/2005)   www.ladbs.org

LAUTERBACH & ASSOCIATES
A R C H I T E C T S • I N C.
David C. Kesterson, Architect • Ilona Scott, Architect • Mark S. Pettit, Architect
300 MONTGOMERY AVENUE, OXNARD, CALIFORNIA 93036 | 805-988-0912 | FAX 805-981-4510 | www.la-arch.com

REGISTERED PROFESSIONAL ENGINEER SHANE DENNIS JUDD No. M34632 MECHANICAL STATE OF CALIFORNIA

REGISTERED PROFESSIONAL ENGINEER SHANE DENNIS JUDD No. C70991 CIVIL STATE OF CALIFORNIA

FASHION PARK APARTMENTS
234, 251 & 257 FASHION PARK
OXNARD, CA, 93036

CITY OF OXNARD HOUSING AUTHORITY
435 S. D STREET
OXNARD, CALIFORNIA 93030

NO	DESCRIPTION	DATE
1	SUBMIT	4/8/2020

ISSUE

JOB NO. 20-190209

DRAWN BY:
CHECKED BY:
PROJECT MANAGER:
PRINT DATE: 2/15/19 8:36:51 AM

GENERAL NOTES (CONT'D)

S-1.1

THESE DRAWINGS AND SPECIFICATIONS ARE THE PROPERTY AND COPYRIGHT OF LAUTERBACH & ASSOCIATES, ALL RIGHTS RESERVED, AND SHALL NOT BE USED ON ANY OTHER WORK OR PROJECT EXCEPT BY WRITTEN AGREEMENT WITH LAUTERBACH & ASSOCIATES. WRITTEN DIMENSIONS SHALL TAKE PRECEDENCE OVER SCALED DIMENSIONS AND SHALL BE VERIFIED ON THE JOB SITE, ANY DISCREPANCY SHALL BE BROUGHT TO THE NOTICE OF LAUTERBACH & ASSOCIATES PRIOR TO COMMENCEMENT OF ANY WORK.

12"W X 12"D TIE FOOTING W/ (2)-#4 BARS T&B

(E) 12" X 24" FOOTING TO REMAIN V.I.F.

(N) 12" X 24" FOOTING W/ (2)-#4 BARS T&B

4X6 POST UNO
6X6 POST UNO
POST ABOVE
BEAM # IN CALCULATIONS
BEARING WALLS
NON-BEARING WALLS
BEARING WALLS ABOVE

8 S-3.0 CALIFORNIA FRAMING

1. FOR TYPICAL CUTTING, NOTCHING, AND BORING SEE 1/S-3.0
2. FOR TYPICAL OPENING IN SHEAR PANELS SEE 9/S-3.0
3. FOR TYPICAL HOLD-DOWN STRAP AT UPPER FLOOR SEE 7/S-3.0
4. FOR TYPICAL TOP PLATE SPLICE SEE 2 THRU 6/S-3.0,
5. PROVIDE DBL 2x TRIMMER AT EACH END OF EACH HDR/BEAM UNO
6. SHEATHE ENTIRE EXTERIOR WITH 'B' SHEAR WALL MIN. UNO
7. ALL EXT. BEARING WALLS 2X6 @ 16" O.C. & INT. BEARING WALLS 2X6 @ 16" O.C. UNO
8. PROVIDE MIN. 1/4" GAP BETWEEN TOP PL AND BEAMS @ ALL NON-BEARING WALLS U.N.O
9. ALL STRAPS (MST W/ (2)-2X MIN., MSTI W/ TJI, ETC) BY SIMPSON STRONG-TIE MEET LARR #25713 AND ICC ESR #2105
10. ALL ANGLES (A35, LTP4, ETC) BY SIMPSON STRONG-TIE MEET LARR #25716 AND ICC ESR #3096
11. ALIGN RR OR FJ WITH DRAG STRAPS WHERE SPECIFIED. PROVIDE EDGE NAILING ALONG ENTIRE RR OR FJ
12. ALL 'Q' FASTENERS IMPLY SDS2.5 SCREWS TO BE USED
14. EPOXY USING SIMPSON SET-XP (ICC ESR #2508 AND LARR#25744)
15. A COPY OF THE LOS ANGELES REPORT AND/OR CONDITIONS OF LISTING SHALL BE MADE AVAILABLE AT THE JOB SITE

Diaphragm and Shear Wall Notes

1. Roof diaphragm nailing to be inspected before covering. Face grain of plywood shall be perpendicular to supports. Floor shall have tongue and groove or blocked panel edges. Plywood spans shall conform with Table 2304.8(1)
2. All diaphragm and shear wall nailing shall utilize common nails or galvanized box.

SHEAR WALL SCHEDULE [6]

(DOUBLE LETTER INDICATES TWO SIDED APPLICATION W/ 3/4" dia. A.B. @ 12" O.C. & A35 OR LTP4 @ 6" O.C.)

MARK	W.S.P [3]	EDGE NAILING [4]	ANCHOR BOLTS [5]	SILL NAILING @ UPPER FLOORS	ALLOWABLE SHEAR (plf) [6]	A35 OR LTP4 SPACING (MIN.)
A	15/32"	8d @ 6" o.c.	5/8" dia. @ 32" o.c.	16d @ 6" o.c.	200	32" O.C.
B	15/32"	10d @ 6" o.c.	5/8" dia. @ 24" o.c.	16d @ 4" o.c.	255	24" O.C.
C [1]	15/32"	10d @ 4" o.c.	5/8" dia. @ 16" o.c.	SDS 1/4"x6"@6"o.c. [2]	383	16" O.C.
D [1]	15/32"	10d @ 3" o.c.	5/8" dia. @ 16" o.c.	SDS 1/4"x6"@6"o.c. [2]	499	12" O.C.
E [1]	15/32"	10d @ 2" o.c.	5/8" dia. @ 16" o.c.	SDS 1/4"x6"@4"o.c. [2]	653	8" O.C.
#	EXISTING SHEAR WALL SHEATHING, NAILING AND HOLD DOWNS TO REMAIN U.N.O.					

1. 3x boundary & edge studs required. 3x pressure treated sill plate required against concrete. (For walls CC, DD, & EE, 3x sill plate required at upper floors.)
2. Simpson SDS 1/4"X6" screws staggered into 4x minimum.
3. Wood Structural Panel applied over studs spaced at 16" o.c. Use 5-ply STRUCT I plywood, PS1-09 or STRUCT I OSB, PS2-10.
4. Nailing at intermediate members to be spaced @ 12" O.C. Only common nails shall be used. (10d-0.148" dia., 8d-0.131" dia.) Nail guns using "clipped head" or "sinker" nails are not acceptable. Stagger nailing in top plates, boundary members, and edge members. Edge distance for nailing at 3x boundary and panel edges shall be 1/2" minimum.
5. Use 12" min. long anchor bolts extending 4-1/2" out of concrete min.
6. Based on 2016 chapter 23 of the CBC (reduced 25%)

HOLDOWN NOTES

1. All bolt holes shall be 1/8" (maximum) over-size at the connection of holdowns to posts. Inspectors to verify.
2. Holdown connection bolts/nuts shall be torqued 1/2 turn beyond finger tight or as required by manufacturer. Inspector shall verify by random inspection prior to covering walls.
3. Approved plate washers in lieu of cut washers to be used for plywood shear wall sill plate anchor bolts and for holdown connector bolts at shear walls.

MINIMUM SIZE FOR SQUARE PLATE WASHERS

BOLT SIZE	PLATE SIZE
5/8"	3"X3"X.229"
3/4"	3"X3"X.229"

FOUNDATION PAD SCHEDULE

PAD	SIZE	THK.	REBAR
A	2'-6"x2'-6"	x12"	4-#4 E.W.
B	3'-6"x3'-6"	x15"	4-#5 E.W.
C	4'-6"x4'-6"	x18"	6-#5 E.W.
D	5'-6"x5'-6"	x21"	6-#6 E.W.

(E) F.J. TO REMAIN U.N.O.

2X8 R.R. @ 16" O.C. U.N.O.

2X6 C.J. @ 16" O.C. U.N.O.

FLOOR SHEATHING

23/32" T&G STURD-1-FLOOR @ TILE PSR. 48/24

Nailing:

BOUNDARY	10 d @ 6 in. o.c.
EDGE	10 d @ 6 in. o.c.
FIELD	10 d @ 12 in. o.c.

1-1/8" T&G STURD-1-FLOOR U.N.O. PSR. 60/48

Nailing:

BOUNDARY	12 d @ 6 in. o.c.
EDGE	12 d @ 6 in. o.c.
FIELD	12 d @ 12 in. o.c.

ROOF SHEATHING

19/32" CDX PLYWOOD OR OSB PSR. 40/20

Nailing:

BOUNDARY	10 d @ 6 in. o.c.
EDGE	10 d @ 6 in. o.c.
FIELD	10 d @ 12 in. o.c.

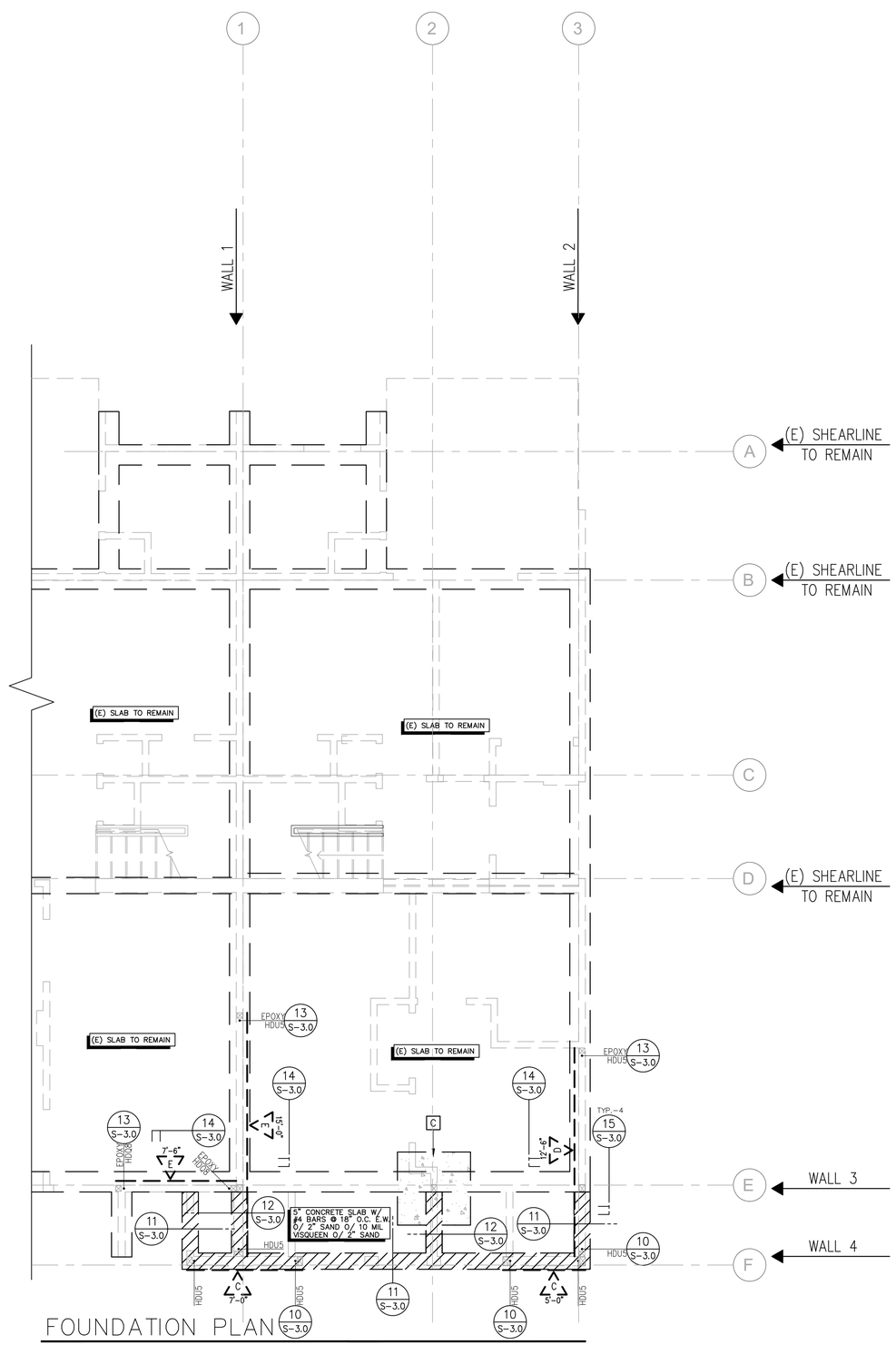

FOUNDATION PLAN

SCALE: 1/4"=1'-0"

LAUTERBACH & ASSOCIATES
ARCHITECTS INC.
David C. Kesterson, Architect • Ilona Scott, Architect • Mark S. Pettit, Architect
300 MONTGOMERY AVENUE, OXNARD, CALIFORNIA 93036 | 805-988-0912 | FAX 805-981-4510 | www.la-arch.com

REGISTERED PROFESSIONAL ENGINEER SHANE DENNIS LUCKER No. M34632 MECHANICAL STATE OF CALIFORNIA

REGISTERED PROFESSIONAL ENGINEER SHANE DENNIS LUCKER No. C70591 CIVIL STATE OF CALIFORNIA

FASHION PARK APARTMENTS
234, 251 & 257 FASHION PARK
OXNARD, CA, 93036

CITY OF OXNARD HOUSING AUTHORITY
435 S. D STREET
OXNARD, CALIFORNIA 93030

NO	DESCRIPTION	DATE
1	SUBMIT	4/8/2020

ISSUE

JOB NO. 20-190209

DRAWN BY:
CHECKED BY:
PROJECT MANAGER:
PRINT DATE: 2/15/19 8:36:51 AM

FOUNDATION PLAN

S-2.0

THESE DRAWINGS AND SPECIFICATIONS ARE THE PROPERTY AND COPYRIGHT OF LAUTERBACH & ASSOCIATES. ALL RIGHTS RESERVED, AND SHALL NOT BE USED ON ANY OTHER WORK OR PROJECT EXCEPT BY WRITTEN AGREEMENT WITH LAUTERBACH & ASSOCIATES. WRITTEN DIMENSIONS SHALL TAKE PRECEDENCE OVER SCALED DIMENSIONS AND SHALL BE VERIFIED ON THE JOB SITE. ANY DISCREPANCY SHALL BE BROUGHT TO THE NOTICE OF LAUTERBACH & ASSOCIATES PRIOR TO COMMENCEMENT OF ANY WORK.

4X6 POST UNO
6X6 POST UNO
POST ABOVE
BEAM # IN CALCULATIONS
BEARING WALLS
NON-BEARING WALLS
BEARING WALLS ABOVE

8 / S-3.0 CALIFORNIA FRAMING

1. FOR TYPICAL CUTTING, NOTCHING, AND BORING SEE 1/S-3.0
2. FOR TYPICAL OPENING IN SHEAR PANELS SEE 9/S-3.0
3. FOR TYPICAL HOLD-DOWN STRAP AT UPPER FLOOR SEE 7/S-3.0
4. FOR TYPICAL TOP PLATE SPLICE SEE 2 THRU 6/S-3.0,
5. PROVIDE DBL 2x TRIMMER AT EACH END OF EACH HDR/BEAM UNO
6. SHEATHE ENTIRE EXTERIOR WITH 'B' SHEAR WALL MIN. UNO
7. ALL EXT. BEARING WALLS 2X6 @ 16" O.C. & INT. BEARING WALLS 2X6 @ 16" O.C. UNO
8. PROVIDE MIN. 1/4" GAP BETWEEN TOP PL AND BEAMS @ ALL NON-BEARING WALLS U.N.O
9. ALL STRAPS (MST W/ (2)-2X MIN., MSTI W/ TJI, ETC) BY SIMPSON STRONG-TIE MEET LARR #25713 AND ICC ESR #2105
10. ALL ANGLES (A35, LTP4, ETC) BY SIMPSON STRONG-TIE MEET LARR #25716 AND ICC ESR #3096
11. ALIGN RR OR FJ WITH DRAG STRAPS WHERE SPECIFIED. PROVIDE EDGE NAILING ALONG ENTIRE RR OR FJ
12. ALL 'Q' FASTENERS IMPLY SDS2.5 SCREWS TO BE USED
14. EPOXY USING SIMPSON SET-XP (ICC ESR #2508 AND LARR#25744)
15. A COPY OF THE LOS ANGELES REPORT AND/OR CONDITIONS OF LISTING SHALL BE MADE AVAILABLE AT THE JOB SITE

Diaphragm and Shear Wall Notes

1. Roof diaphragm nailing to be inspected before covering. Face grain of plywood shall be perpendicular to supports. Floor shall have tongue and groove or blocked panel edges. Plywood spans shall conform with Table 2304.8(1)
2. All diaphragm and shear wall nailing shall utilize common nails or galvanized box.

SHEAR WALL SCHEDULE 6

(DOUBLE LETTER INDICATES TWO SIDED APPLICATION W/ 3/4" dia. A.B. @ 12" O.C. & A35 OR LTP4 @ 6" O.C.)

MARK	W.S.P 3	EDGE NAILING 4	ANCHOR BOLTS 5	SILL NAILING @ UPPER FLOORS	ALLOWABLE SHEAR (plf) 6	A35 OR LTP4 SPACING (MIN.)
A	15/32"	8d @ 6" o.c.	5/8" dia. @ 32" o.c.	16d @ 6" o.c.	200	32" O.C.
B	15/32"	10d @ 6" o.c.	5/8" dia. @ 24" o.c.	16d @ 4" o.c.	255	24" O.C.
C 1	15/32"	10d @ 4" o.c.	5/8" dia. @ 16" o.c.	SDS 1/4"x6"@6"o.c. 2	383	16" O.C.
D 1	15/32"	10d @ 3" o.c.	5/8" dia. @ 16" o.c.	SDS 1/4"x6"@6"o.c. 2	499	12" O.C.
E 1	15/32"	10d @ 2" o.c.	5/8" dia. @ 16" o.c.	SDS 1/4"x6"@4"o.c. 2	653	8" O.C.
#	EXISTING SHEAR WALL SHEATHING, NAILING AND HOLD DOWNS TO REMAIN U.N.O.					

1. 3x boundary & edge studs required. 3x pressure treated sill plate required against concrete. (For walls CC, DD, & EE, 3x sill plate required at upper floors.)
2. Simpson SDS 1/4"X6" screws staggered into 4x minimum.
3. Wood Structural Panel applied over studs spaced at 16" o.c. Use 5-ply STRUCT I plywood, PS1-09 or STRUCT I OSB, PS2-10.
4. Nailing at intermediate members to be spaced @ 12" O.C. Only common nails shall be used. (10d-0.148" dia., 8d-0.131" dia.) Nail guns using "clipped head" or "sinker" nails are not acceptable. Stagger nailing in top plates, boundary members, and edge members. Edge distance for nailing at 3x boundary and panel edges shall be 1/2" minimum.
5. Use 12" min. long anchor bolts extending 4-1/2" out of concrete min.
6. Based on 2016 chapter 23 of the CBC (reduced 25%)

HOLDOWN NOTES

1. All bolt holes shall be 1/8" (maximum) over-size at the connection of holdowns to posts. Inspectors to verify.
2. Holdown connection bolts/nuts shall be torqued 1/2 turn beyond finger tight or as required by manufacturer. Inspector shall verify by random inspection prior to covering walls.
3. Approved plate washers in lieu of cut washers to be used for plywood shear wall sill plate anchor bolts and for holdown connector bolts at shear walls.

MINIMUM SIZE FOR SQUARE PLATE WASHERS

BOLT SIZE	PLATE SIZE
5/8"	3"X3"X.229"
3/4"	3"X3"X.229"

(E) F.J. TO REMAIN U.N.O.
2X8 R.R. @ 16" O.C. U.N.O.
2X6 C.J. @ 16" O.C. U.N.O.

FLOOR SHEATHING
23/32" T&G STURD-1-FLOOR @ TILE PSR. 48/24
Nailing:
BOUNDARY 10 d @ 6 in. o.c.
EDGE 10 d @ 6 in. o.c.
FIELD 10 d @ 12 in. o.c.

1-1/8" T&G STURD-1-FLOOR U.N.O. PSR. 60/48
Nailing:
BOUNDARY 12 d @ 6 in. o.c.
EDGE 12 d @ 6 in. o.c.
FIELD 12 d @ 12 in. o.c.

ROOF SHEATHING
19/32" CDX PLYWOOD OR OSB PSR. 40/20
Nailing:
BOUNDARY 10 d @ 6 in. o.c.
EDGE 10 d @ 6 in. o.c.
FIELD 10 d @ 12 in. o.c.

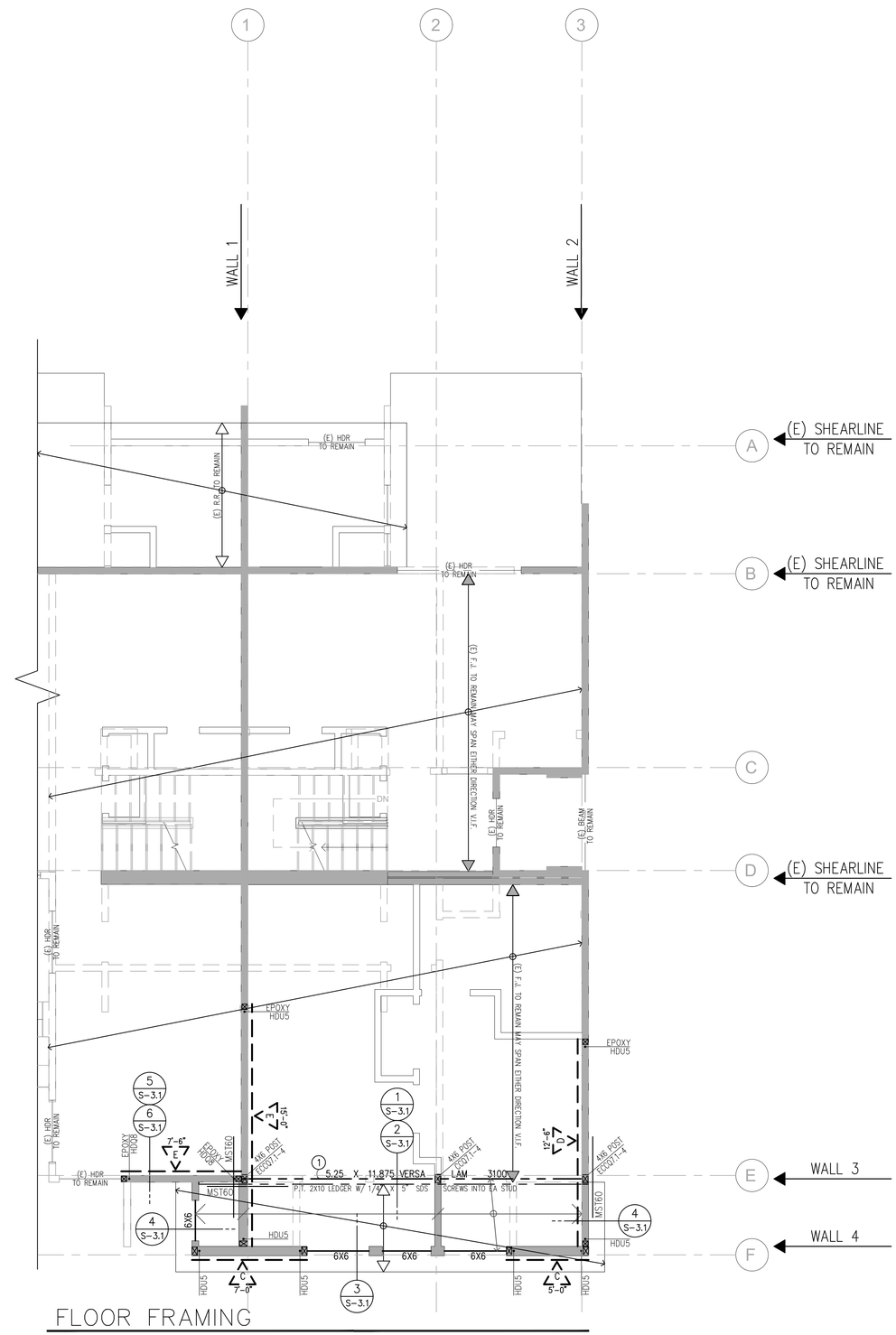

FLOOR FRAMING

SCALE: 1/4"=1'-0"

LAUTERBACH & ASSOCIATES
ARCHITECTS INC.
David C. Kesterson, Architect • Ilona Scott, Architect • Mark S. Pettit, Architect
300 MONTGOMERY AVENUE, OXNARD, CALIFORNIA 93036 | 805-988-0912 | FAX 805-981-4510 | www.la-arch.com

REGISTERED PROFESSIONAL ENGINEER SHANE DENNIS PETTIT No. M 34632 MECHANICAL STATE OF CALIFORNIA

REGISTERED PROFESSIONAL ENGINEER SHANE DENNIS PETTIT No. C 70891 CIVIL STATE OF CALIFORNIA

FASHION PARK APARTMENTS
234, 251 & 257 FASHION PARK
OXNARD, CA, 93036

CITY OF OXNARD HOUSING AUTHORITY
435 S. D STREET
OXNARD, CALIFORNIA 93030

NO	DESCRIPTION	DATE
1	SUBMIT	4/8/2020

ISSUE

JOB NO. 20-190209

DRAWN BY:
CHECKED BY:
PROJECT MANAGER:
PRINT DATE: 2/15/19 8:36:51 AM

FLOOR FRAMING PLAN

S-2.1

THESE DRAWINGS AND SPECIFICATIONS ARE THE PROPERTY AND COPYRIGHT OF LAUTERBACH & ASSOCIATES, ALL RIGHTS RESERVED, AND SHALL NOT BE USED ON ANY OTHER WORK OR PROJECT EXCEPT BY WRITTEN AGREEMENT WITH LAUTERBACH & ASSOCIATES. WRITTEN DIMENSIONS SHALL TAKE PRECEDENCE OVER SCALED DIMENSIONS AND SHALL BE VERIFIED ON THE JOB SITE. ANY DISCREPANCY SHALL BE BROUGHT TO THE NOTICE OF LAUTERBACH & ASSOCIATES PRIOR TO COMMENCEMENT OF ANY WORK.

- 4X6 POST UNO
- 6X6 POST UNO
- POST ABOVE
- BEAM # IN CALCULATIONS
- BEARING WALLS
- NON–BEARING WALLS
- BEARING WALLS ABOVE

8 / S–3.0 CALIFORNIA FRAMING

1. FOR TYPICAL CUTTING, NOTCHING, AND BORING SEE 1/S–3.0
2. FOR TYPICAL OPENING IN SHEAR PANELS SEE 9/S–3.0
3. FOR TYPICAL HOLD–DOWN STRAP AT UPPER FLOOR SEE 7/S–3.0
4. FOR TYPICAL TOP PLATE SPLICE SEE 2 THRU 6/S–3.0,
5. PROVIDE DBL 2x TRIMMER AT EACH END OF EACH HDR/BEAM UNO
6. SHEATHE ENTIRE EXTERIOR WITH 'B' SHEAR WALL MIN. UNO
7. ALL EXT. BEARING WALLS 2X6 @ 16" O.C. & INT. BEARING WALLS 2X6 @ 16" O.C. UNO
8. PROVIDE MIN. 1/4" GAP BETWEEN TOP PL AND BEAMS @ ALL NON–BEARING WALLS U.N.O
9. ALL STRAPS (MST W/ (2)–2X MIN., MSTI W/ TJI, ETC) BY SIMPSON STRONG–TIE MEET LARR #25713 AND ICC ESR #2105
10. ALL ANGLES (A35, LTP4, ETC) BY SIMPSON STRONG–TIE MEET LARR #25716 AND ICC ESR #3096
11. ALIGN RR OR FJ WITH DRAG STRAPS WHERE SPECIFIED. PROVIDE EDGE NAILING ALONG ENTIRE RR OR FJ
12. ALL 'Q' FASTENERS IMPLY SDS2.5 SCREWS TO BE USED
14. EPOXY USING SIMPSON SET–XP (ICC ESR #2508 AND LARR#25744)
15. A COPY OF THE LOS ANGELES REPORT AND/OR CONDITIONS OF LISTING SHALL BE MADE AVAILABLE AT THE JOB SITE

Diaphragm and Shear Wall Notes

1. Roof diaphragm nailing to be inspected before covering. Face grain of plywood shall be perpendicular to supports. Floor shall have tongue and groove or blocked panel edges. Plywood spans shall conform with Table 2304.8(1)
2. All diaphragm and shear wall nailing shall utilize common nails or galvanized box.

(E) F.J. TO REMAIN U.N.O.

2X8 R.R. @ 16" O.C. U.N.O.

2X6 C.J. @ 16" O.C. U.N.O.

FLOOR SHEATHING

23/32" T&G STURD–1–FLOOR @ TILE PSR. 48/24

Nailing:

BOUNDARY	10 d @ 6 in. o.c.
EDGE	10 d @ 6 in. o.c.
FIELD	10 d @ 12 in. o.c.

1–1/8" T&G STURD–1–FLOOR U.N.O. PSR. 60/48

Nailing:

BOUNDARY	12 d @ 6 in. o.c.
EDGE	12 d @ 6 in. o.c.
FIELD	12 d @ 12 in. o.c.

ROOF SHEATHING

19/32" CDX PLYWOOD OR OSB PSR. 40/20

Nailing:

BOUNDARY	10 d @ 6 in. o.c.
EDGE	10 d @ 6 in. o.c.
FIELD	10 d @ 12 in. o.c.

SHEAR WALL SCHEDULE [6]

(DOUBLE LETTER INDICATES TWO SIDED APPLICATION W/ 3/4" dia. A.B. @ 12" O.C. & A35 OR LTP4 @ 6" O.C.)

MARK	W.S.P [3]	EDGE NAILING [4]	ANCHOR BOLTS [5]	SILL NAILING @ UPPER FLOORS	ALLOWABLE SHEAR (plf) [6]	A35 OR LTP4 SPACING (MIN.)
A	15/32"	8d @ 6" o.c.	5/8" dia. @ 32" o.c.	16d @ 6" o.c.	200	32" O.C.
B	15/32"	10d @ 6" o.c.	5/8" dia. @ 24" o.c.	16d @ 4" o.c.	255	24" O.C.
C [1]	15/32"	10d @ 4" o.c.	5/8" dia. @ 16" o.c.	SDS 1/4"x6"@6"o.c. [2]	383	16" O.C.
D [1]	15/32"	10d @ 3" o.c.	5/8" dia. @ 16" o.c.	SDS 1/4"x6"@6"o.c. [2]	499	12" O.C.
E [1]	15/32"	10d @ 2" o.c.	5/8" dia. @ 16" o.c.	SDS 1/4"x6"@4"o.c. [2]	653	8" O.C.
#	EXISTING SHEAR WALL SHEATHING, NAILING AND HOLD DOWNS TO REMAIN U.N.O.					

1. 3x boundary & edge studs required. 3x pressure treated sill plate required against concrete. (For walls CC, DD, & EE, 3x sill plate required at upper floors.)
2. Simpson SDS 1/4"X6" screws staggered into 4x minimum.
3. Wood Structural Panel applied over studs spaced at 16" o.c. Use 5–ply STRUCT I plywood, PS1–09 or STRUCT I OSB, PS2–10.
4. Nailing at intermediate members to be spaced @ 12" O.C. Only common nails shall be used. (10d–0.148" dia., 8d–0.131" dia.) Nail guns using "clipped head" or "sinker" nails are not acceptable. Stagger nailing in top plates, boundary members, and edge members. Edge distance for nailing at 3x boundary and panel edges shall be 1/2" minimum.
5. Use 12" min. long anchor bolts extending 4–1/2" out of concrete min.
6. Based on 2016 chapter 23 of the CBC (reduced 25%)

HOLDOWN NOTES

1. All bolt holes shall be 1/8" (maximum) over–size at the connection of holdowns to posts. Inspectors to verify.
2. Holdown connection bolts/nuts shall be torqued 1/2 turn beyond finger tight or as required by manufacturer. Inspector shall verify by random inspection prior to covering walls.
3. Approved plate washers in lieu of cut washers to be used for plywood shear wall sill plate anchor bolts and for holdown connector bolts at shear walls.

MINIMUM SIZE FOR SQUARE PLATE WASHERS

BOLT SIZE	PLATE SIZE
5/8"	3"X3"X.229"
3/4"	3"X3"X.229"

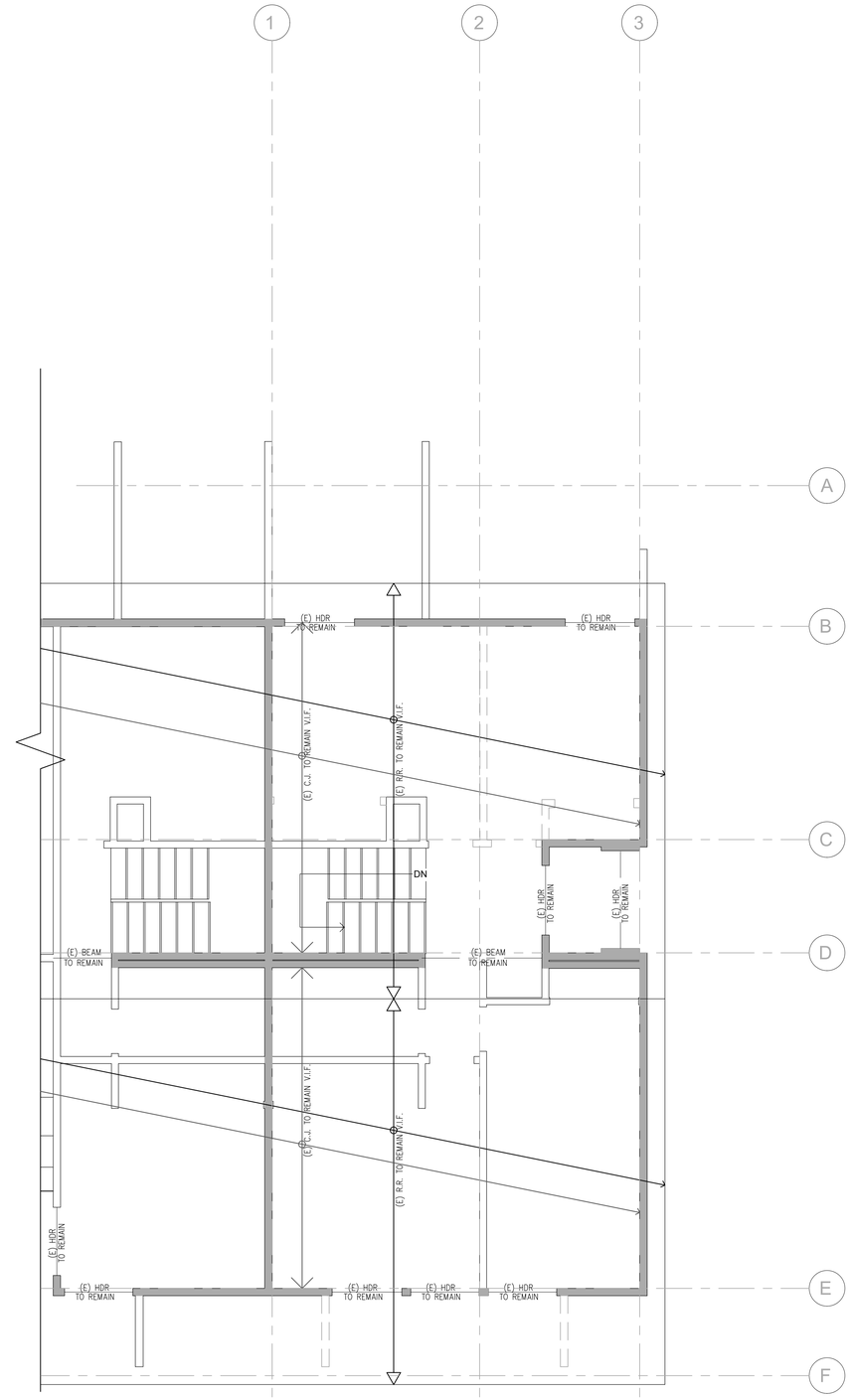

ROOF FRAMING PLAN

SCALE: 1/4"=1'–0"

LAUTERBACH & ASSOCIATES
ARCHITECTS INC.
David C. Kesterson, Architect • Ilona Scott, Architect • Mark S. Pettit, Architect
300 MONTGOMERY AVENUE, OXNARD, CALIFORNIA 93036 | 805-988-0912 | FAX 805-981-4510 | www.la-arch.com

REGISTERED PROFESSIONAL ENGINEER SHANE DENNIS No. M34632 MECHANICAL STATE OF CALIFORNIA

REGISTERED PROFESSIONAL ENGINEER SHANE DENNIS No. C70891 CIVIL STATE OF CALIFORNIA

FASHION PARK APARTMENTS
234, 251 & 257 FASHION PARK
OXNARD, CA, 93036

CITY OF OXNARD HOUSING AUTHORITY
435 S. D STREET
OXNARD, CALIFORNIA 93030

NO.	DESCRIPTION	DATE
1	SUBMIT	4/8/2020

ISSUE

JOB NO. 20-190209

DRAWN BY:
CHECKED BY:
PROJECT MANAGER:
PRINT DATE: 2/15/19 8:36:51 AM

ROOF FRAMING PLAN

S-2.2

THESE DRAWINGS AND SPECIFICATIONS ARE THE PROPERTY AND COPYRIGHT OF LAUTERBACH & ASSOCIATES. ALL RIGHTS RESERVED, AND SHALL NOT BE USED ON ANY OTHER WORK OR PROJECT EXCEPT BY WRITTEN AGREEMENT WITH LAUTERBACH & ASSOCIATES. WRITTEN DIMENSIONS SHALL TAKE PRECEDENCE OVER SCALED DIMENSIONS AND SHALL BE VERIFIED ON THE JOB SITE. ANY DISCREPANCY SHALL BE BROUGHT TO THE NOTICE OF LAUTERBACH & ASSOCIATES PRIOR TO COMMENCEMENT OF ANY WORK.

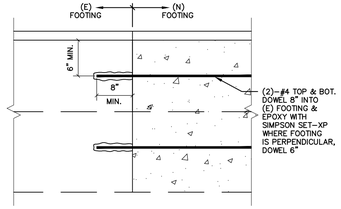

DEPUTY INSPECTION REQ'D FOR EPOXY WORK

15 SCALE: NTS

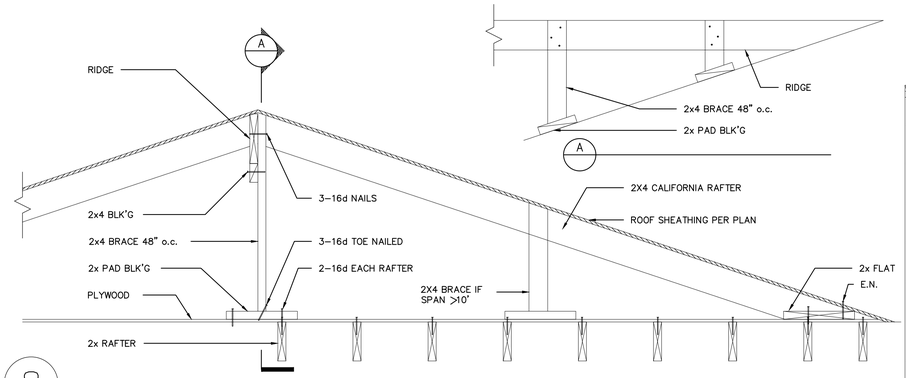

8 SCALE: NTS

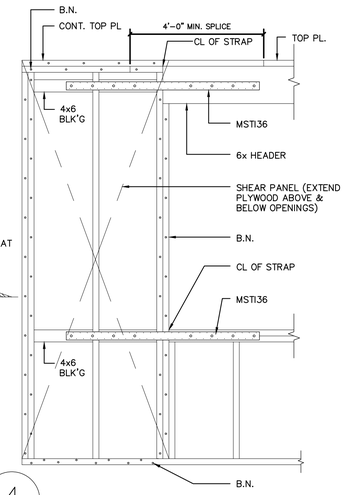

4 SCALE: NTS

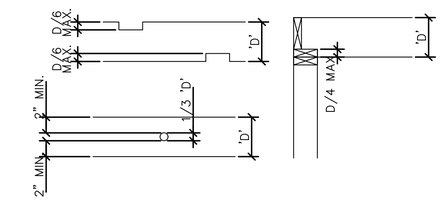

NOTCHING & BORING FLOOR JOISTS (CBC 2308.4.2.4)
(NOTCHING NOT PERMITTED IN MIDDLE 1/3 OF JOIST SPAN)

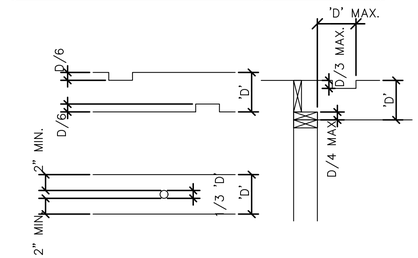

NOTCHING & BORING RAFTERS & CEILING JOISTS (CBC 2308.7.4)
(NOTCHING NOT PERMITTED IN MIDDLE 1/3 OF RAFTER OR JOIST SPAN)

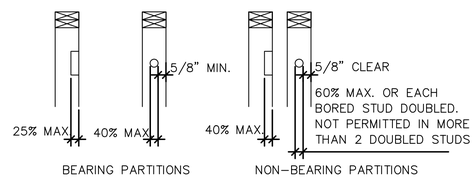

NOTCHING AND BORING WALL STUDS (CBC 2308.5.9/2308.5.10)

1 SCALE: NTS

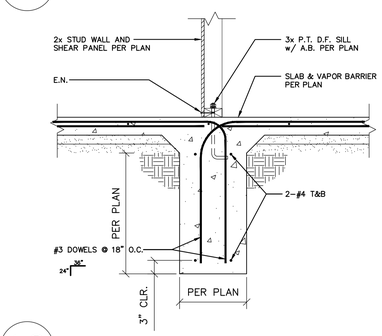

12 SCALE: NTS

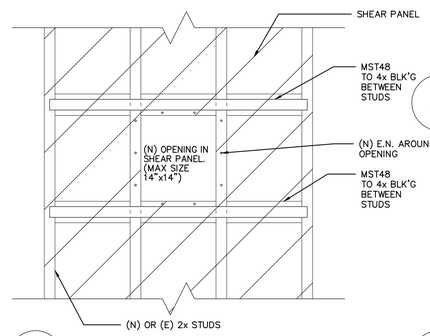

9 SCALE: NTS

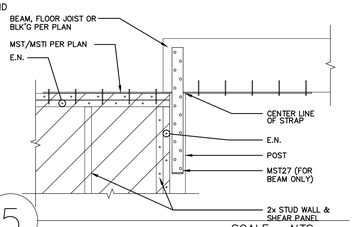

5 SCALE: NTS

NOTE: SLAB TO BE PACHOMETERED TO LOCATE EXISTING POST – TENSION CABLES PRIOR TO DRILLING. DRILL TO MAINTAIN 3" CLR. FROM ANY LOCATED CABLES.

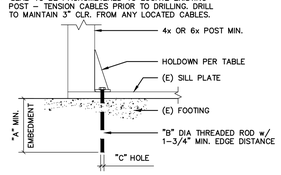

HOLDOWN	"A"	"B"	"C"	"D"
HDU2/ HDU5	12"	5/8"	3/4"	4685#
HDQ8	15"	7/8"	1"	8325#
HHDQ11	18"	1"	1–1/8"	11445#
HHDQ14	18"	1"	1–1/8"	14700#

USE "SIMPSON" SET–XP ADHESIVE SYSTEM w/ 2000 p.s.i. EXISTING CONCRETE. ALLOWABLE TENSILE LOADS = "D". (I.C.C. REPORT #2508)

DEPUTY INSPECTION REQ'D FOR ALL EPOXY WORK

13 SCALE: NTS

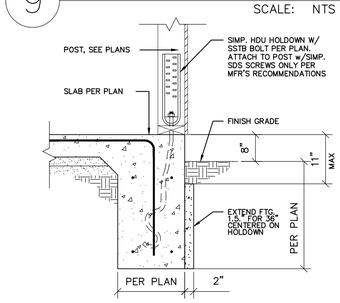

10 SCALE: NTS

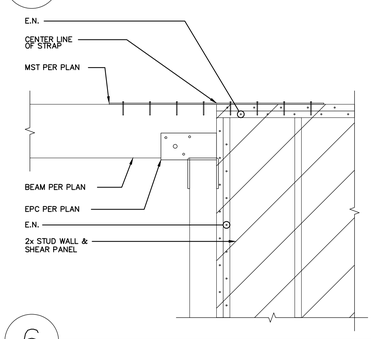

6 SCALE: NTS

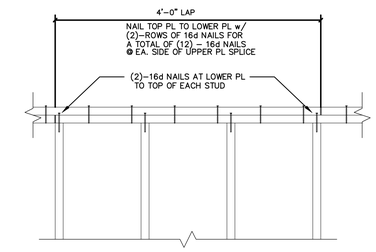

2 SCALE: NTS

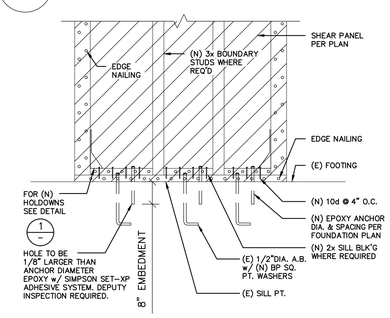

USE "SIMPSON" SET–XP ADHESIVE SYSTEM w/ 2000 p.s.i.
LARR #25744 (DEPUTY INSPECTION REQUIRED FOR EPOXY WORK)

14 SCALE: NTS

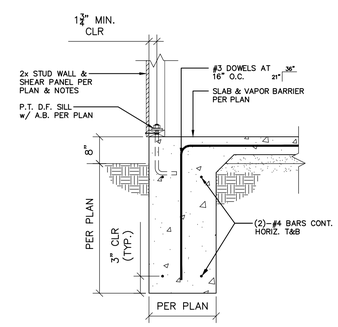

11 SCALE: NTS

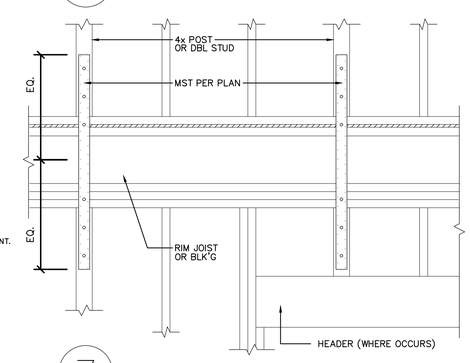

7 SCALE: NTS

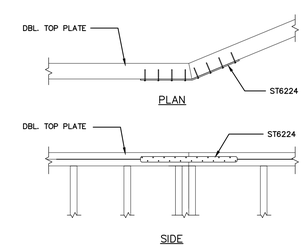

3 SCALE: NTS

THESE DRAWINGS AND SPECIFICATIONS ARE THE PROPERTY AND COPYRIGHT OF LAUTERBACH & ASSOCIATES. ALL RIGHTS RESERVED, AND SHALL NOT BE USED ON ANY OTHER WORK OR PROJECT EXCEPT BY WRITTEN AGREEMENT WITH LAUTERBACH & ASSOCIATES. WRITTEN DIMENSIONS SHALL TAKE PRECEDENCE OVER SCALED DIMENSIONS AND SHALL BE VERIFIED ON THE JOB SITE. ANY DISCREPANCY SHALL BE BROUGHT TO THE NOTICE OF LAUTERBACH & ASSOCIATES PRIOR TO COMMENCEMENT OF ANY WORK.

LAUTERBACH & ASSOCIATES
ARCHITECTS INC.
David C. Kesterson, Architect • Ilona Scott, Architect • Mark S. Pettit, Architect
300 MONTGOMERY AVENUE, OXNARD, CALIFORNIA 93036 | 805-988-0912 | FAX 805-981-4510 | www.la-arch.com

REGISTERED PROFESSIONAL ENGINEER SHANE DENNIS No. M34632 MECHANICAL STATE OF CALIFORNIA

REGISTERED PROFESSIONAL ENGINEER SHANE DENNIS No. C36991 CIVIL STATE OF CALIFORNIA

FASHION PARK APARTMENTS
234, 251 & 257 FASHION PARK
OXNARD, CA, 93036

CITY OF OXNARD HOUSING AUTHORITY
435 S. D STREET
OXNARD, CALIFORNIA 93030

NO	DESCRIPTION	DATE
1	SUBMIT	4/8/2020

ISSUE

JOB NO. 20-190209

DRAWN BY:
CHECKED BY:
PROJECT MANAGER:
PRINT DATE: 2/15/19 8:36:51 AM

STRUCTURAL DETAILS

S-3.0

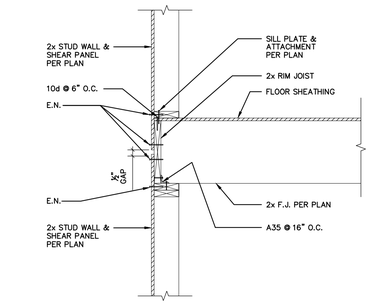

5 SCALE: NTS

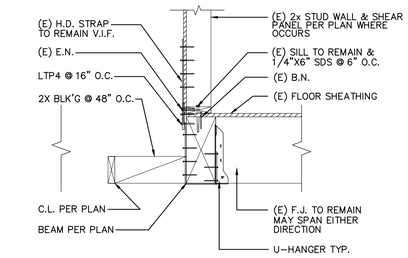

1 SCALE: NTS

13 SCALE: NTS

9 SCALE: NTS

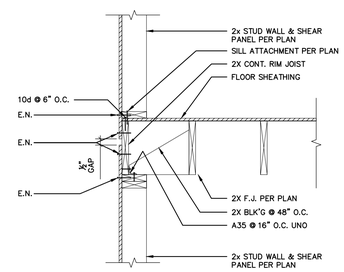

6 SCALE: NTS

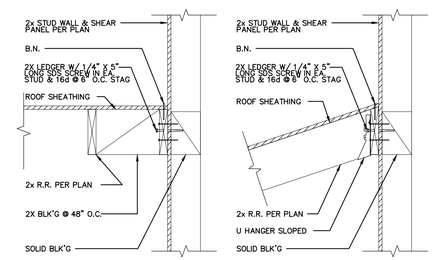

2 SCALE: NTS

14 SCALE: NTS

10 SCALE: NTS

6 SCALE: NTS

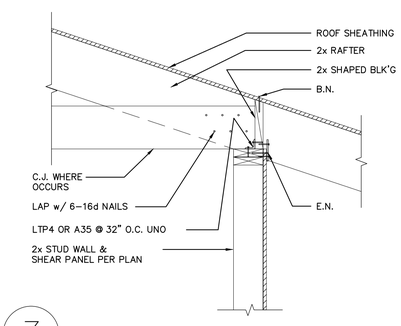

3 SCALE: NTS

15 SCALE: NTS

11 SCALE: NTS

7 SCALE: NTS

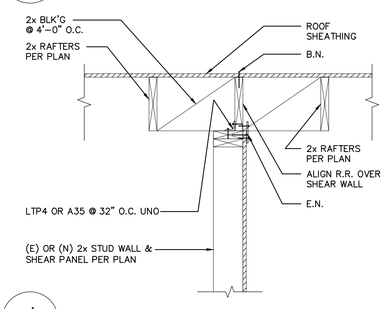

4 SCALE: NTS

16 SCALE: NTS

12 SCALE: NTS

8 SCALE: NTS

THESE DRAWINGS AND SPECIFICATIONS ARE THE PROPERTY AND COPYRIGHT OF LAUTERBACH & ASSOCIATES. ALL RIGHTS RESERVED, AND SHALL NOT BE USED ON ANY OTHER WORK OR PROJECT EXCEPT BY WRITTEN AGREEMENT WITH LAUTERBACH & ASSOCIATES. WRITTEN DIMENSIONS SHALL TAKE PRECEDENCE OVER SCALED DIMENSIONS AND SHALL BE VERIFIED ON THE JOB SITE. ANY DISCREPANCY SHALL BE BROUGHT TO THE NOTICE OF LAUTERBACH & ASSOCIATES PRIOR TO COMMENCEMENT OF ANY WORK.

LAUTERBACH & ASSOCIATES
ARCHITECTS INC.
David C. Kesterson, Architect • Ilona Scott, Architect • Mark S. Pettit, Architect
300 MONTGOMERY AVENUE, OXNARD, CALIFORNIA 93036 | 805-988-0912 | FAX 805-981-4510 | www.la-arch.com

REGISTERED PROFESSIONAL ENGINEER SHANE DENNIS MECHANICAL No. M34632 STATE OF CALIFORNIA

REGISTERED PROFESSIONAL ENGINEER SHANE DENNIS CIVIL No. C70891 STATE OF CALIFORNIA

FASHION PARK APARTMENTS
234, 251 & 257 FASHION PARK
OXNARD, CA, 93036

CITY OF OXNARD HOUSING AUTHORITY
435 S. D STREET
OXNARD, CALIFORNIA 93030

NO	DESCRIPTION	DATE
1	SUBMIT	4/8/2020

ISSUE

JOB NO. 20-190209

DRAWN BY:
CHECKED BY:
PROJECT MANAGER:
PRINT DATE: 2/15/19 8:36:51 AM

STRUCTURAL DETAILS (CONT'D)

S-3.1

KEYNOTES - EXISTING TO REMAIN

E.03	EXISTING ROOF OVERHANG
E.04	EXISTING TREE TO REMAIN, TYPICAL
E.06	EXISTING STREET LIGHT
E.09	EXISTING TRASH ENCLOSURE
E.12	EXISTING LANDSCAPE AREA
E.13	EXISTING FIRE HYDRANT AND 150' RADIUS
E.17	EXISTING CURB RAMP
E.26	EXISTING MONUMENT SIGN
E.27	EXISTING CLUSTER MAIL BOX
E.30	EXISTING CARPORT WITH 3" METAL POST 9'- 0" O.C.
E.31	EXISTING CARPORT WITH CMU WALLS
E.32	EXISTING "NO PARKING SIGN"
E.41	EXISTING BOLLARD

KEYNOTES

01.13	ADDITION TO (1) ONE-BEDROOM UNIT
02.01	PARKING SPACE: STANDARD
02.02	ACCESS COMPLIANT PARKING (VAN)
02.08	TRUNCATED DOMES (SEE DETAIL 6/A-501)
03.01	CONCRETE SIDEWALK
03.04	CONCRETE STOOP, 2% SLOPE MAXIMUM IN ALL DIRECTIONS

SYMBOL LEGEND

- PATH OF TRAVEL
- NEW ADDITION AREA
- UNIT TO BE MODIFIED

GENERAL NOTES

1. EXISTING CONCRETE SLAB AT CARPORT TO BE REPAIRED AS REQUIRED TO PROVIDE ADEQUATE SURFACE FOR ACCESSIBLE PARKING AND LOADING AREAS.
2. ACCESSIBLE SPACE AND LOADING AREA TO BE STRIPED AND PAINTED AS REQUIRED (DETAIL 4/A-501)
3. MODIFICATIONS TO EXISTING BACKFLOW PREVENTER TO BE DESIGN-BUILD BY CONTRACTOR, INCLUDING NEW OR RELOCATION OF BFP, DETERMINATION OF NEW LOCATION, AND CONNECTIONS TO EXISTING SYSTEM.

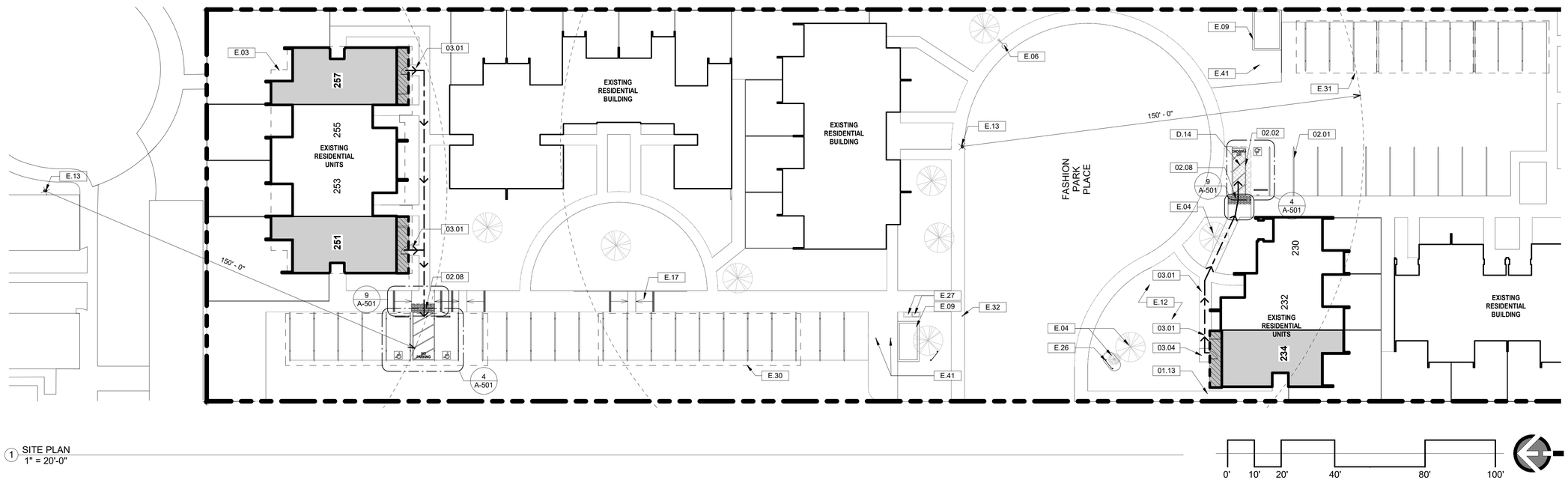

1 SITE PLAN
1" = 20'-0"

0' 10' 20' 40' 80' 100'

LAUTERBACH & ASSOCIATES
ARCHITECTS • INC.
David C. Kesterson, Architect • Ilona Scott, Architect • Mark S. Pettit, Architect
300 MONTGOMERY AVENUE, OXNARD, CALIFORNIA 93036 | 805-988-0912 | FAX 805-981-4510 | www.la-arch.com

LICENSED ARCHITECT ILONA SCOTT No. C11881 Ren. 06/21 STATE OF CALIFORNIA

FASHION PARK APARTMENTS

234, 251 & 257 FASHION PARK
OXNARD, CA, 93036

CITY OF OXNARD HOUSING AUTHORITY

435 S. D STREET
OXNARD, CALIFORNIA 93030

NO	DESCRIPTION	DATE
1	Pl ch submittal	04/08/2020

ISSUE

JOB NO.	20-190709
DRAWN BY:	TJL
CHECKED BY:	ISS
PROJECT MANAGER:	ISS
PRINT DATE:	4/8/2020 3:05:30 AM

SITE PLAN

A0-001

THESE DRAWINGS AND SPECIFICATIONS ARE THE PROPERTY AND COPYRIGHT OF LAUTERBACH & ASSOCIATES. ALL RIGHTS RESERVED, AND SHALL NOT BE USED ON ANY OTHER WORK OR PROJECT EXCEPT BY WRITTEN AGREEMENT WITH LAUTERBACH & ASSOCIATES. WRITTEN DIMENSIONS SHALL TAKE PRECEDENCE OVER SCALED DIMENSIONS AND SHALL BE VERIFIED ON THE JOB SITE. ANY DISCREPANCY SHALL BE BROUGHT TO THE NOTICE OF LAUTERBACH & ASSOCIATES PRIOR TO COMMENCEMENT OF ANY WORK.

G:\2019 Projects\20-190709 City of Oxnard-Sec 4-Fashion\Drawings\Architectural\20-190709 City of Oxnard - 234, 251, & 257 Fashion Park Apartments - CD.rvt

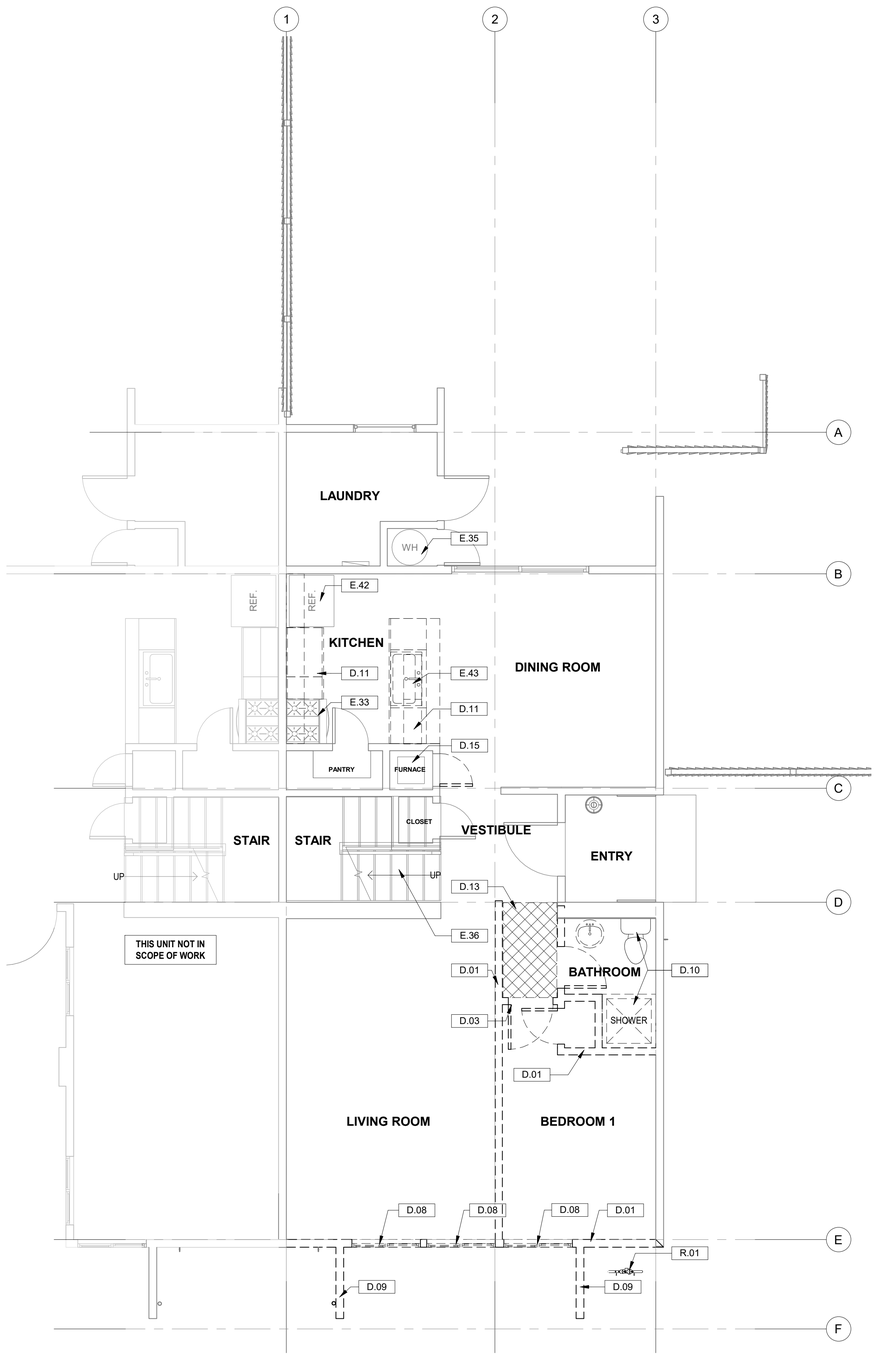

1 257 FLOOR PLAN - 1ST FLOOR - DEMOLITION - 251 REVERSED, 234 ROTATED
1/4" = 1'-0"

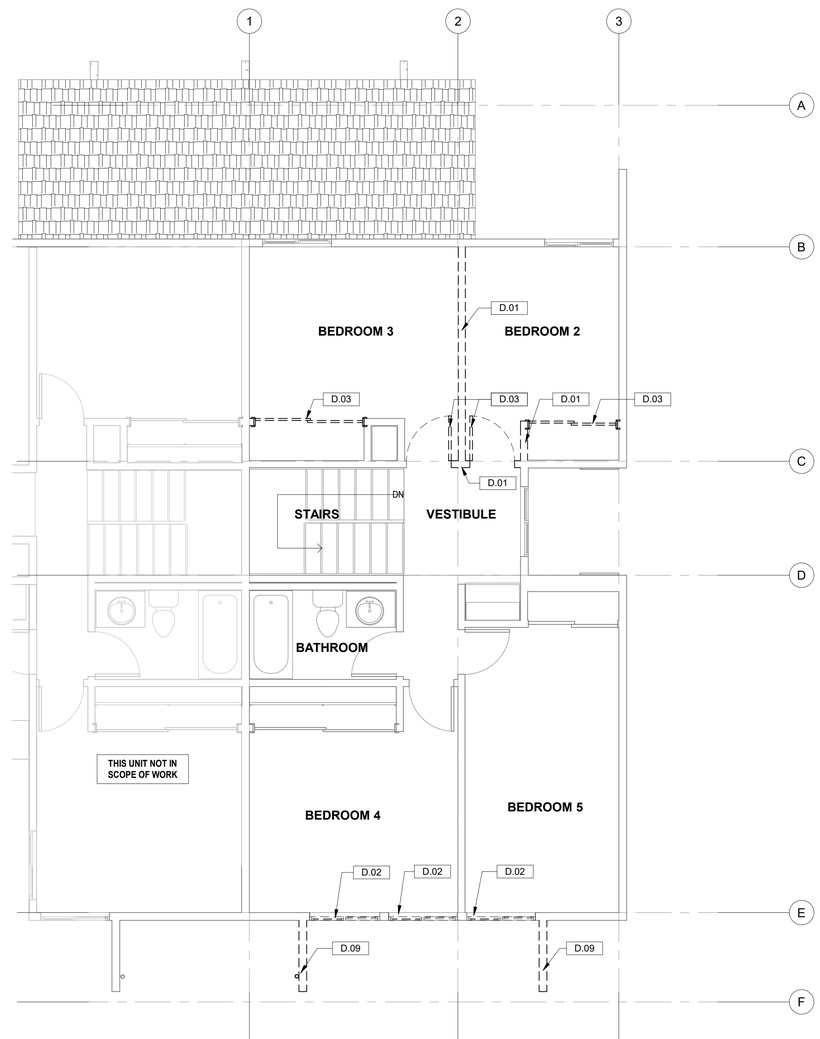

2 257 FLOOR PLAN - 2ND FLOOR - DEMOLITION - 251 REVERSED, 234 ROTATED
1/4" = 1'-0"

KEYNOTES - EXISTING TO REMAIN

E.33	EXISTING STOVE: (PROTECT AND STORE FOR CLIENTS RE-USE)
E.35	EXISTING WATER HEATER
E.36	EXISTING STAIRS AND RAILING
E.42	EXISTING REFRIGERATOR: (PROTECT AND STORE FOR CLIENTS RE-USE)
E.43	EXISTING KITCHEN SINK: (PROTECT AND STORE FOR CLIENTS RE-USE)

KEYNOTES - RELOCATE EXISTING

R.01	RELOCATE EXISTING BACKFLOW DEVICE

KEYNOTES - DEMOLITION

D.01	DEMOLISH EXISTING WALL, TYP.
D.02	DEMOLISH EXISTING WINDOW
D.03	DEMOLISH EXISTING DOOR AND FRAME
D.08	DEMOLISH EXISTING WINDOW AND PORTION OF WALL TO ALLOW FOR EXPANSION
D.09	DEMOLISH EXISTING WING WALL
D.10	DEMOLISH EXISTING SHOWER, TOILET AND VANITY
D.11	DEMOLISH EXISTING UPPER AND LOWER CABINETS AND COUNTER
D.13	DEMOLISH PORTION OF EXISTING SOFFIT AT NEW ACCESSIBLE UNIT
D.15	DEMOLISH EXISTING FORCED AIR FURNACE TO ALLOW FOR INSTALLLTION OF NEW FURNACE

GENERAL DEMOLITION NOTES

1. IT IS THE RESPONSIBILITY OF THE CONTRACTOR TO VERIFY ALL CLEARANCES AND INSTALLATION REQUIREMENTS OF CONSTRUCTION ITEMS AGAINST EXISTING CONDITIONS AND DISPOSE OF REMOVED MATERIALS PER THE ORDINANCE.
2. THE CITY OF OXNARD HOUSING AUTHORITY SHALL HAVE THE FIRST RIGHT OF SALVAGE OF ITEMS SHOWN FOR DEMOLITION.
3. SEE MECH., ELEC., AND PLUMB. DWG'S FOR ADDITIONAL DEMOLITION NOTES AND CORRECT LAYOUT FOR SAWCUTS.
4. VERIFY ALL EXISTING DOORS TO BE REMOVED WITH PROPOSED REPLACEMENT DOOR ASSEMBLIES FOR SUFFICIENT CLEARANCE AND FRAMING REQUIREMENTS. DEMOLISH PORTIONS OF EXISTING WALL FRAMING AS REQ'D AND PROVIDE NEW FRAMING PER DETAILS WHERE REQUIRED. SEE DOOR SCHEDULE.
5. REMOVE EXISTING FLOOR FINISHES, MASTICS, ETC. DOWN TO EXISTING SLAB OR PLYWOOD FLOOR WHERE REPLACEMENT FINISHES ARE INDICATED. PROVIDE PATCHING AND REFINISHING OF THE SURFACES PER MANUFACTURER'S SPECIFICATIONS FOR THE NEW FINISHES SELECTED TO INSURE PROPER INSTALLATION OF NEW FINISHES.
6. FOR EXISTING WALLS TO REMAIN, INSPECT FOR DAMAGE OF ANY KIND; REPLACE DAMAGED MATERIALS WITH NEW BEFORE NEW GYPSUM WALL BOARD IS APPLIED.
7. WHERE EXISTING PLUMBING AND OTHER UTILITIES ARE TO BE REMOVED, CAP ALL ABANDONED PIPING BELOW FINISH FLOOR AND WITHIN WALL, TYP. PRESERVE EXISTING ROUGH PLUMBING WHERE NECESSARY FOR RECONNECTION. SEE PLUMBING DRAWINGS.
8. EXISTING ITEMS TO REMAIN SHALL BE PROTECTED DURING DEMOLITION, OR TEMPORARILY REMOVED AND REPLACED AT CONTRACTOR'S OPTION.
9. PROTECT DURING DEMOLITION ANY STRUCTURAL ELEMENT TO REMAIN.
10. REMOVE EXISTING EXTERIOR PLASTER FINISHES AS REQUIRED. PROTECT EXISTING STRUCTURE FROM WEATHER OTHER DAMAGE DURING CONSTRUCTION, AND RESTORE MOISTURE PROTECTION SYSTEMS PRIOR TO INSTALLATION OF NEW PLASTER FINISHES.

NOTES:

1. DEMOLITION INCLUDES;
   A. REMOVAL OF GYPSUM BOARD CEILING AT FIRST FLOOR (ABOVE ACCESS COMPLIANT UNIT ONLY)
   B. REMOVAL OF DRYWALL ON THE WALLS TO ALLOW FOR NEW INSULATION INSTALLATION.
   C. REMOVAL OF FLOOR FINISHES TO SLAB AND PLYWOOD.
   D. ALERT ARCHITECT IF DAMAGE OR ROT IS FOUND.
2. FOR INTERIOR AND EXTERIOR TRENCHING LOCATIONS TO INSTALL UTILITIES, COORDINATE ARCHITECTURAL, STRUCTURAL, ELECTRICAL AND PLUMBING INFORMATION. VERIFY EXISTING UNDERGROUND CONDITIONS CURRENTLY UNKNOWN AND NOTIFY ARCHITECTS IF CONFLICTS ARE FOUND.
3. REFER TO SHEET A-201 FOR DEMOLITION ELEVATIONS

DEMOLITION LEGEND

	DEMOLISH WALL
	DEMOLISH SOFFIT

0' 2' 4' 8' 16'

LAUTERBACH & ASSOCIATES
ARCHITECTS • INC.
David C. Kesterson, Architect • Ilona Scott, Architect • Mark S. Pettit, Architect
300 MONTGOMERY AVENUE, OXNARD, CALIFORNIA 93036 | 805-988-0912 | FAX 805-981-4510 | www.la-arch.com

LICENSED ARCHITECT ILONA SCOTT No. C11881 Ren. 06/21 STATE OF CALIFORNIA

FASHION PARK APARTMENTS

234, 251 & 257 FASHION PARK
OXNARD, CA, 93036

CITY OF OXNARD HOUSING AUTHORITY

435 S. D STREET
OXNARD, CALIFORNIA 93030

NO	DESCRIPTION	DATE
1	PI ch submittal	04/08/2020

ISSUE

JOB NO. 20-190709

DRAWN BY: TJL
CHECKED BY: ISS
PROJECT MANAGER: ISS
PRINT DATE: 4/8/2020 3:04:32 AM

DEMO FLOOR PLANS - 1ST & 2ND

A-100

THESE DRAWINGS AND SPECIFICATIONS ARE THE PROPERTY AND COPYRIGHT OF LAUTERBACH & ASSOCIATES. ALL RIGHTS RESERVED, AND SHALL NOT BE USED ON ANY OTHER WORK OR PROJECT EXCEPT BY WRITTEN AGREEMENT WITH LAUTERBACH & ASSOCIATES. WRITTEN DIMENSIONS SHALL TAKE PRECEDENCE OVER SCALED DIMENSIONS AND SHALL BE VERIFIED ON THE JOB SITE. ANY DISCREPANCY SHALL BE BROUGHT TO THE NOTICE OF LAUTERBACH & ASSOCIATES PRIOR TO COMMENCEMENT OF ANY WORK.

G:\2019 Projects\20-190709 City of Oxnard-Set 4-Fashion\Drawings\Architectural\20-190709 City of Oxnard - 234, 251, & 257 Fashion Park Apartments - CD.rvt

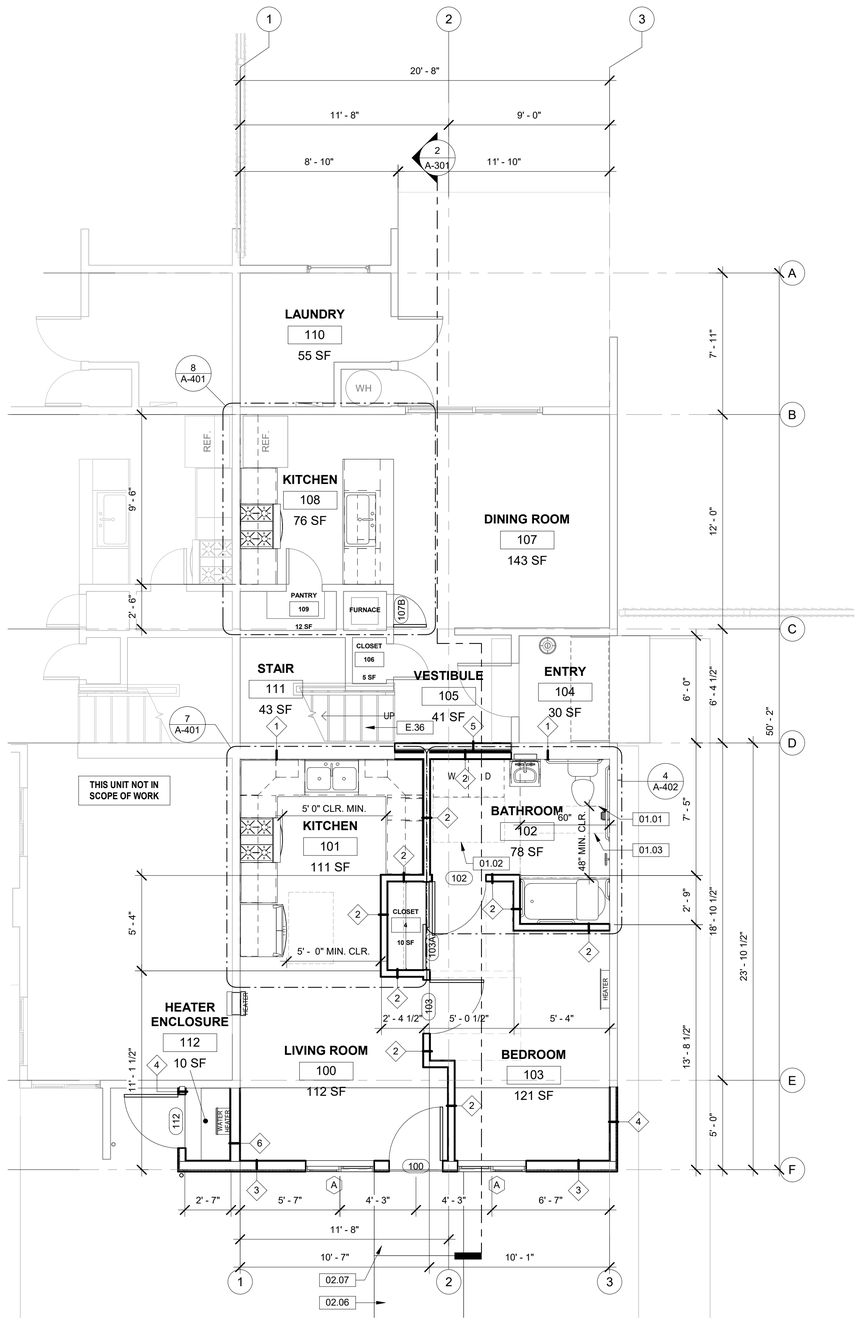

1 257 - 1ST FLOOR - PROPOSED - 251 REVERSED, 234 ROTATED
1/4" = 1'-0"

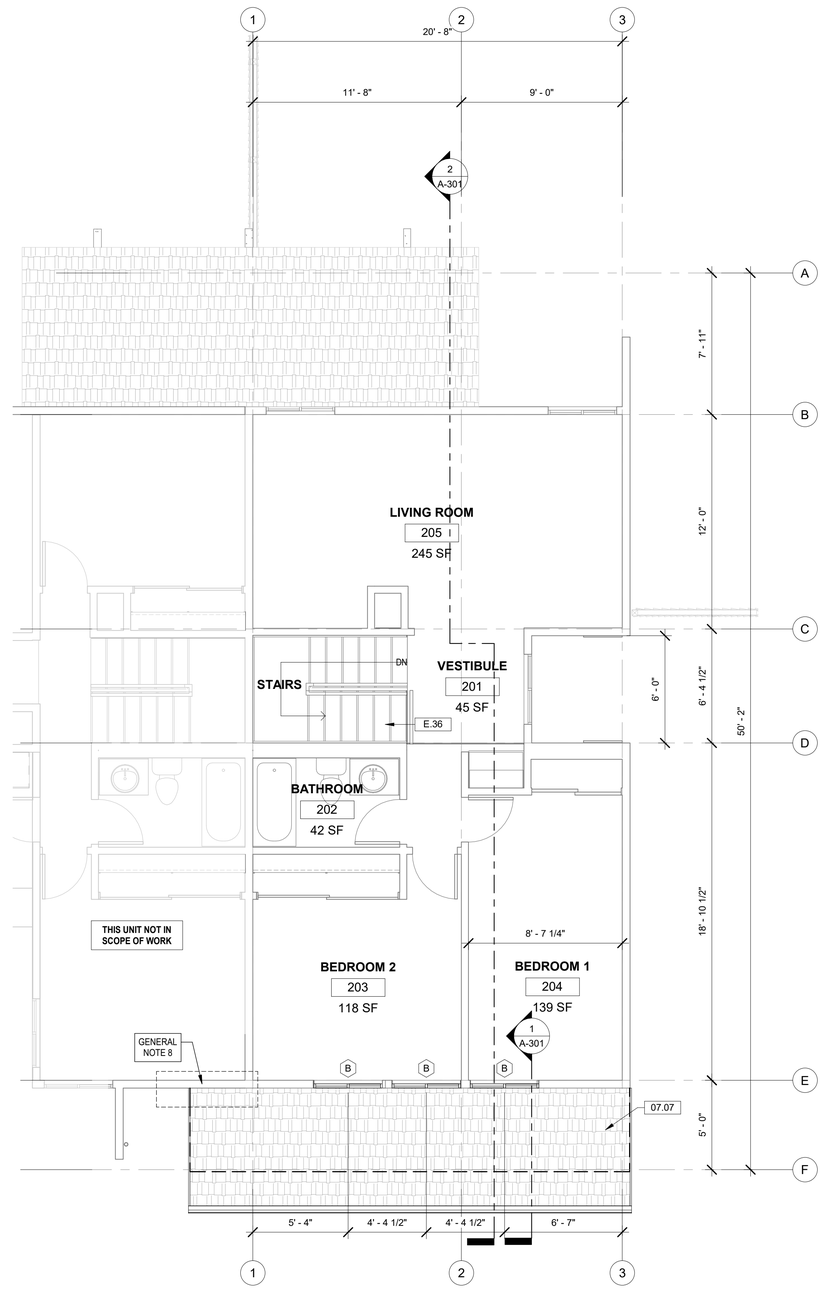

2 257 - 2ND FLOOR - PROPOSED - 251 REVERSED, 234 ROTATED
1/4" = 1'-0"

KEYNOTES - EXISTING TO REMAIN

E.36	EXISTING STAIRS AND RAILING

KEYNOTES

01.01	66"x60" CLEAR TOILET SPACE
01.02	30"x48" CLEAR SPACE
01.03	48"X60" CLEAR TUB SPACE
02.06	SLOPED WALK NOT TO EXCEED 5% SLOPE
02.07	LANDING LESS THAN 2% SLOPE IN ALL DIRECTIONS
07.07	NEW ROOF

GENERAL NOTES

1. CONTRACTOR TO VERIFY EXISTING WINDOW OPENINGS IN FIELD.
2. FOR NEW WATER HEATER ENCLOSURE, VERIFY MANUFACTURERS' MINIMUM CLEARANCE GUIDELINES.
3. WHERE WINDOWS AND DOORS ARE REMOVED AND NOT REPLACED INFILL TO MATCH SURROUNDING WALLS, WATERPROOF AND INSTALL EXTERIOR CEMENT PLASTER AND INTERIOR DRYWALL.
4. WHERE NEW WALLS ARE ADDED ADJACENT TO EXISTING WALL THEY SHALL BE FLUSH, SMOOTH, LEVEL, AND SEAMLESS.
5. REPAIR, WATERPROOF AND REPLACE WITH CEMENT PLASTER ANY AREAS DAMAGED BY WORK.
6. PAINT EXTERIOR NEW TO MATCH EXISTING. COLORS FOR EXTERIOR CEMENT PLASTER, DOORS, TRIMS, FASCIA, GUTTERS AND DOWNSPOUTS SELECTED BY CLIENT.
7. WHERE EXISTING UTILITIES ARE IN THE PATH OF CONSTRUCTION, RELOCATE PER CITY STANDARDS.
8. CONTRACTOR TO REVIEW EXISTING CONDITIONS AND REQUIREMENTS OF NEW CONSTRUCTION TO DETERMINE EXTENT OF REPAIRS REQUIRED AT THIS AREA. IF POSSIBLE, ALL WORK TO BE PERFORMED AT EXTERIOR.

WALL LEGEND

EXISTING WALL

NEW WALL

FOR WALL TYPES SEE SHEET A-602

A FOR WINDOW TYPES SEE SHEET A-601

0' 2' 4' 8' 16'

LAUTERBACH & ASSOCIATES
ARCHITECTS INC.
David C. Kesterson, Architect • Ilona Scott, Architect • Mark S. Pettit, Architect
300 MONTGOMERY AVENUE, OXNARD, CALIFORNIA 93036 | 805-988-0912 | FAX 805-981-4510 | www.la-arch.com

LICENSED ARCHITECT ILONA SCOTT No. C11881 Ren. 06/21 STATE OF CALIFORNIA

FASHION PARK APARTMENTS

234, 251 & 257 FASHION PARK
OXNARD, CA, 93036

CITY OF OXNARD HOUSING AUTHORITY

435 S. D STREET
OXNARD, CALIFORNIA 93030

NO	DESCRIPTION	DATE
1	PI ch submittal	04/08/2020

ISSUE

JOB NO. 20-190709

DRAWN BY: TJL
CHECKED BY: ISS
PROJECT MANAGER: ISS
PRINT DATE: 4/8/2020 3:03:32 AM

FLOOR PLANS - 1ST & 2ND

A-101

THESE DRAWINGS AND SPECIFICATIONS ARE THE PROPERTY AND COPYRIGHT OF LAUTERBACH & ASSOCIATES. ALL RIGHTS RESERVED, AND SHALL NOT BE USED ON ANY OTHER WORK OR PROJECT EXCEPT BY WRITTEN AGREEMENT WITH LAUTERBACH & ASSOCIATES. WRITTEN DIMENSIONS SHALL TAKE PRECEDENCE OVER SCALED DIMENSIONS AND SHALL BE VERIFIED ON THE JOB SITE. ANY DISCREPANCY SHALL BE BROUGHT TO THE NOTICE OF LAUTERBACH & ASSOCIATES PRIOR TO COMMENCEMENT OF ANY WORK.

G:\2019 Projects\20-190709 City of Oxnard-Set 4-Fashion\Drawings\Architectural\20-190709 City of Oxnard - 234, 251, & 257 Fashion Park Apartments - CD.rvt

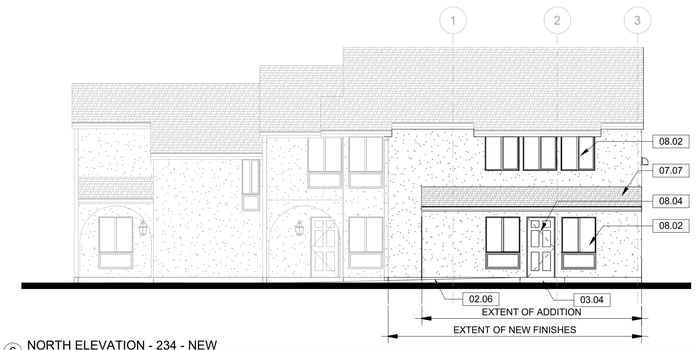

6 NORTH ELEVATION - 234 - NEW
1/8" = 1'-0"

3 UNIT 234 ELEVATION (NORTH) DEMOLITION
1/8" = 1'-0"

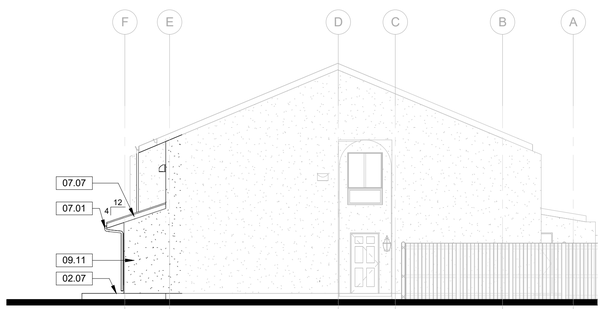

5 257 (EAST) ELEVATION 251 (WEST) MIRRORED, 234 (WEST) ROTATED - NEW
1/8" = 1'-0"

2 257 (EAST) ELEVATION 251 (WEST) MIRRORED, 234 (WEST) ROTATED - DEMOLITION
1/8" = 1'-0"

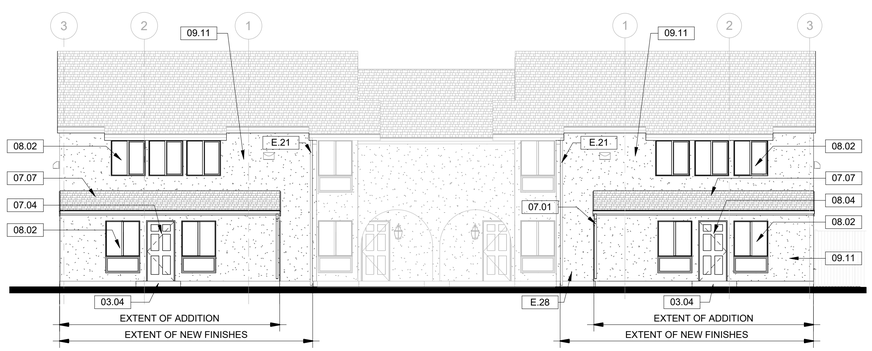

4 251 - 257 ELEVATION (SOUTH) - NEW
1/8" = 1'-0"

1 251 - 257 ELEVATION (SOUTH) DEMOLITION
1/8" = 1'-0"

KEYNOTES - EXISTING TO REMAIN

E.21	EXISTING ROOF GUTTER AND DOWNSPOUT
E.28	EXISTING HOSE BIBB
E.44	EXISTING WEEP SCREED

KEYNOTES - DEMOLITION

D.02	DEMOLISH EXISTING WINDOW
D.08	DEMOLISH EXISTING WINDOW AND PORTION OF WALL TO ALLOW FOR EXPANSION
D.09	DEMOLISH EXISTING WING WALL
D.12	DEMOLISH EXISTING PORTION OF WALL
D.16	DEMOLISH EXISTING PLASTER WALL FINISHES

KEYNOTES

02.06	SLOPED WALK NOT TO EXCEED 5% SLOPE
02.07	LANDING LESS THAN 2% SLOPE IN ALL DIRECTIONS
03.04	CONCRETE STOOP, 2% SLOPE MAXIMUM IN ALL DIRECTIONS
07.01	RAIN GUTTER AND DOWNSPOUT, PAINTED TO MATCH WALL SURFACE
07.04	BATT INSULATION
07.07	NEW ROOF
08.02	WINDOW - SEE FLOOR PLAN
08.04	DOOR - SEE FLOOR PLAN
09.11	CEMENT PLASTER TO MATCH EXISTING

GENERAL DEMOLITION NOTES

1. IT IS THE RESPONSIBILITY OF THE CONTRACTOR TO VERIFY ALL CLEARANCES AND INSTALLATION REQUIREMENTS OF CONSTRUCTION ITEMS AGAINST EXISTING CONDITIONS AND DISPOSE OF REMOVED MATERIALS PER THE ORDINANCE.
2. THE CITY OF OXNARD HOUSING AUTHORITY SHALL HAVE THE FIRST RIGHT OF SALVAGE OF ITEMS SHOWN FOR DEMOLITION.
3. SEE MECH., ELEC., AND PLUMB. DWG'S FOR ADDITIONAL DEMOLITION NOTES AND CORRECT LAYOUT FOR SAWCUTS.
4. VERIFY ALL EXISTING DOORS TO BE REMOVED WITH PROPOSED REPLACEMENT DOOR ASSEMBLIES FOR SUFFICIENT CLEARANCE AND FRAMING REQUIREMENTS. DEMOLISH PORTIONS OF EXISTING WALL FRAMING AS REQ'D AND PROVIDE NEW FRAMING PER DETAILS WHERE REQUIRED. SEE DOOR SCHEDULE.
5. REMOVE EXISTING FLOOR FINISHES, MASTICS, ETC. DOWN TO EXISTING SLAB OR PLYWOOD FLOOR WHERE REPLACEMENT FINISHES ARE INDICATED. PROVIDE PATCHING AND REFINISHING OF THE SURFACES PER MANUFACTURER'S SPECIFICATIONS FOR THE NEW FINISHES SELECTED TO INSURE PROPER INSTALLATION OF NEW FINISHES.
6. FOR EXISTING WALLS TO REMAIN, INSPECT FOR DAMAGE OF ANY KIND; REPLACE DAMAGED MATERIALS WITH NEW BEFORE NEW GYPSUM WALL BOARD IS APPLIED.
7. WHERE EXISTING PLUMBING AND OTHER UTILITIES ARE TO BE REMOVED, CAP ALL ABANDONED PIPING BELOW FINISH FLOOR AND WITHIN WALL, TYP. PRESERVE EXISTING ROUGH PLUMBING WHERE NECESSARY FOR RECONNECTION. SEE PLUMBING DRAWINGS.
8. EXISTING ITEMS TO REMAIN SHALL BE PROTECTED DURING DEMOLITION, OR TEMPORARILY REMOVED AND REPLACED AT CONTRACTOR'S OPTION.
9. PROTECT DURING DEMOLITION ANY STRUCTURAL ELEMENT TO REMAIN.
10. REMOVE EXISTING EXTERIOR PLASTER FINISHES AS REQUIRED. PROTECT EXISTING STRUCTURE FROM WEATHER OTHER DAMAGE DURING CONSTRUCTION, AND RESTORE MOISTURE PROTECTION SYSTEMS PRIOR TO INSTALLATION OF NEW PLASTER FINISHES.

GENERAL NOTES

1. CONTRACTOR TO VERIFY EXISTING WINDOW OPENINGS IN FIELD.
2. FOR NEW WATER HEATER ENCLOSURE, VERIFY MANUFACTURERS' MINIMUM CLEARANCE GUIDELINES.
3. WHERE WINDOWS AND DOORS ARE REMOVED AND NOT REPLACED INFILL TO MATCH SURROUNDING WALLS, WATERPROOF AND INSTALL EXTERIOR CEMENT PLASTER AND INTERIOR DRYWALL.
4. WHERE NEW WALLS ARE ADDED ADJACENT TO EXISTING WALL THEY SHALL BE FLUSH, SMOOTH, LEVEL, AND SEAMLESS.
5. REPAIR, WATERPROOF AND REPLACE WITH CEMENT PLASTER ANY AREAS DAMAGED BY WORK.
6. PAINT EXTERIOR NEW TO MATCH EXISTING. COLORS FOR EXTERIOR CEMENT PLASTER, DOORS, TRIMS, FASCIA, GUTTERS AND DOWNSPOUTS SELECTED BY CLIENT.
7. WHERE EXISTING UTILITIES ARE IN THE PATH OF CONSTRUCTION, RELOCATE PER CITY STANDARDS.
8. CONTRACTOR TO REVIEW EXISTING CONDITIONS AND REQUIREMENTS OF NEW CONSTRUCTION TO DETERMINE EXTENT OF REPAIRS REQUIRED AT THIS AREA. IF POSSIBLE, ALL WORK TO BE PERFORMED AT EXTERIOR.

THESE DRAWINGS AND SPECIFICATIONS ARE THE PROPERTY AND COPYRIGHT OF LAUTERBACH & ASSOCIATES. ALL RIGHTS RESERVED, AND SHALL NOT BE USED ON ANY OTHER WORK OR PROJECT EXCEPT BY WRITTEN AGREEMENT WITH LAUTERBACH & ASSOCIATES. WRITTEN DIMENSIONS SHALL TAKE PRECEDENCE OVER SCALED DIMENSIONS AND SHALL BE VERIFIED ON THE JOB SITE. ANY DISCREPANCY SHALL BE BROUGHT TO THE NOTICE OF LAUTERBACH & ASSOCIATES PRIOR TO COMMENCEMENT OF ANY WORK.

LAUTERBACH & ASSOCIATES
ARCHITECTS INC.
David C. Kesterson, Architect • Ilona Scott, Architect • Mark S. Pettit, Architect
300 MONTGOMERY AVENUE, OXNARD, CALIFORNIA 93036 | 805-988-0912 | FAX 805-981-4510 | www.la-arch.com

LICENSED ARCHITECT
ILONA SCOTT
No. C11881
Ren. 06/21
STATE OF CALIFORNIA

FASHION PARK APARTMENTS

234, 251 & 257 FASHION PARK
OXNARD, CA, 93036

CITY OF OXNARD HOUSING AUTHORITY

435 S. D STREET
OXNARD, CALIFORNIA 93030

NO	DESCRIPTION	DATE
1	PI ch submittal	04/08/2020

ISSUE

JOB NO. 20-190709

DRAWN BY: TJL
CHECKED BY: ISS
PROJECT MANAGER: ISS
PRINT DATE: 4/8/2020 3:02:11 AM

ELEVATIONS

A-201

G:\2019 Projects\20-190709 City of Oxnard-Set 4-Fashion\Drawings\Architectural\20-190709 City of Oxnard - 234, 251, & 257 Fashion Park Apartments - CD.rvt

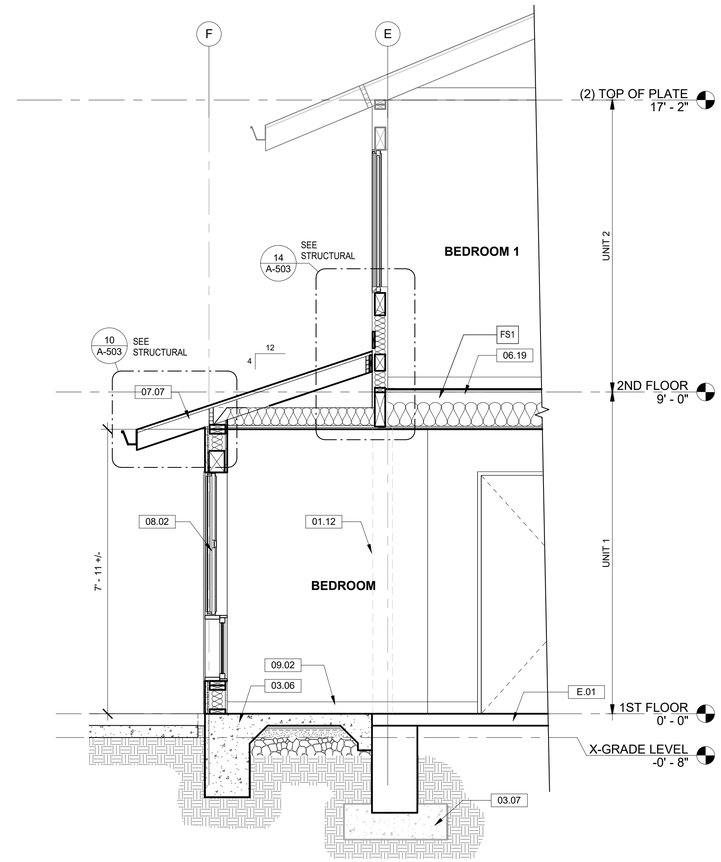

1 ENLARGED SECTION AT ADDITION
1/2" = 1'-0"

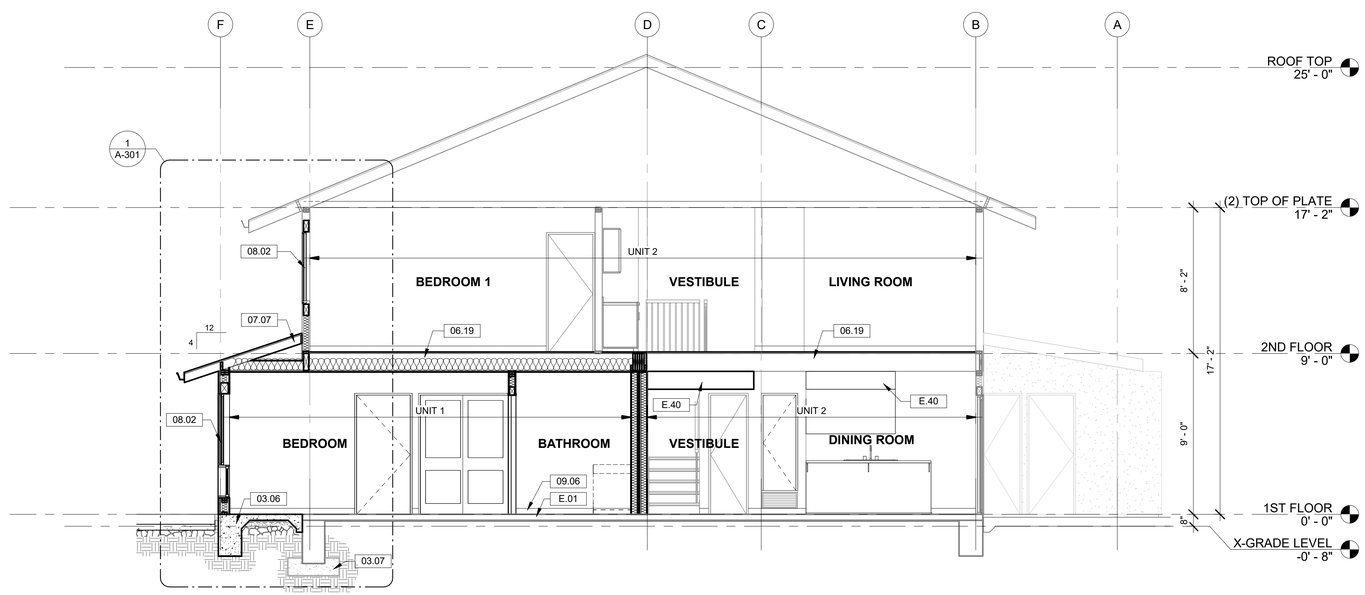

2 BUILDING SECTION
1/4" = 1'-0"

KEYNOTES - EXISTING TO REMAIN

E.01	EXISTING CONCRETE SLAB AND FOOTING
E.40	EXISTING SOFFIT

KEYNOTES

01.12	LINE OF DEMOLISHED EXTERIOR WALL
03.06	NEW CONCRETE SLAB AND FOOTING
03.07	NEW CONCRETE PAD BELOW, BEYOND
06.19	EXISTING FLOOR CEILING SYSTEM MODIFIED FOR FIRE AND SOUND, SEE F.S.1/A-602
07.07	NEW ROOF
08.02	WINDOW - SEE FLOOR PLAN
09.02	4" WALL BASE (PER SCHEDULE)
09.06	VINYL FLOORING

LAUTERBACH & ASSOCIATES
ARCHITECTS INC.
David C. Kesterson, Architect • Ilona Scott, Architect • Mark S. Pettit, Architect
300 MONTGOMERY AVENUE, OXNARD, CALIFORNIA 93036 | 805-988-0912 | FAX 805-981-4510 | www.la-arch.com

LICENSED ARCHITECT
ILONA SCOTT
No. C11881
Ren. 06/21
STATE OF CALIFORNIA

FASHION PARK APARTMENTS

234, 251 & 257 FASHION PARK
OXNARD, CA, 93036

CITY OF OXNARD HOUSING AUTHORITY

435 S. D STREET
OXNARD, CALIFORNIA 93030

NO	DESCRIPTION	DATE
1	PI ch submittal	04/08/2020

ISSUE

JOB NO. 20-190709

DRAWN BY: TJL
CHECKED BY: ISS
PROJECT MANAGER: ISS
PRINT DATE: 4/8/2020 3:01:03 AM

BUILDING SECTIONS

A-301

THESE DRAWINGS AND SPECIFICATIONS ARE THE PROPERTY AND COPYRIGHT OF LAUTERBACH & ASSOCIATES. ALL RIGHTS RESERVED, AND SHALL NOT BE USED ON ANY OTHER WORK OR PROJECT EXCEPT BY WRITTEN AGREEMENT WITH LAUTERBACH & ASSOCIATES. WRITTEN DIMENSIONS SHALL TAKE PRECEDENCE OVER SCALED DIMENSIONS AND SHALL BE VERIFIED ON THE JOB SITE. ANY DISCREPANCY SHALL BE BROUGHT TO THE NOTICE OF LAUTERBACH & ASSOCIATES PRIOR TO COMMENCEMENT OF ANY WORK.

G:\2019 Projects\20-190709 City of Oxnard Set 4-Fashion\Drawings\Architectural\20-190709 City of Oxnard - 234, 251, & 257 Fashion Park Apartments - CD.rvt

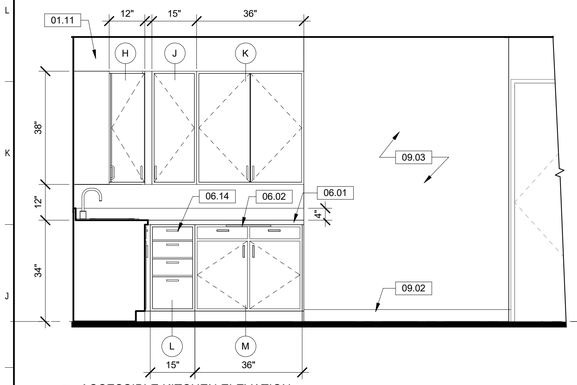

1 ACCESSIBLE KITCHEN ELEVATION
1/2" = 1'-0"

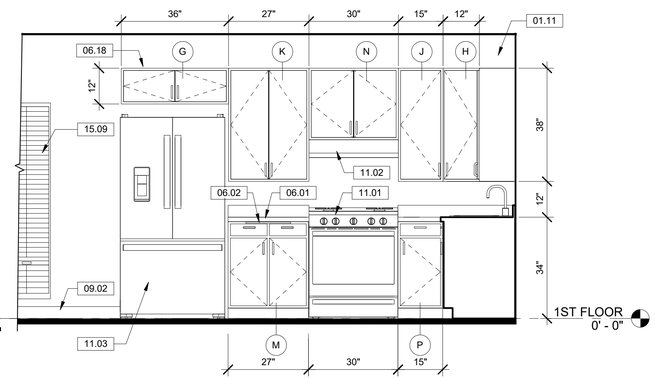

2 ACCESSIBLE KITCHEN ELEVATION
1/2" = 1'-0"

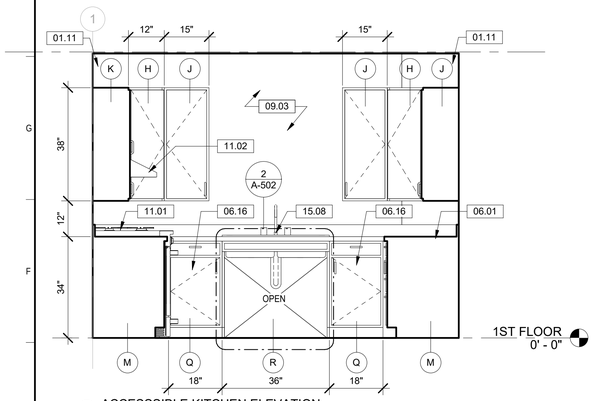

3 ACCESSSIBLE KITCHEN ELEVATION
1/2" = 1'-0"

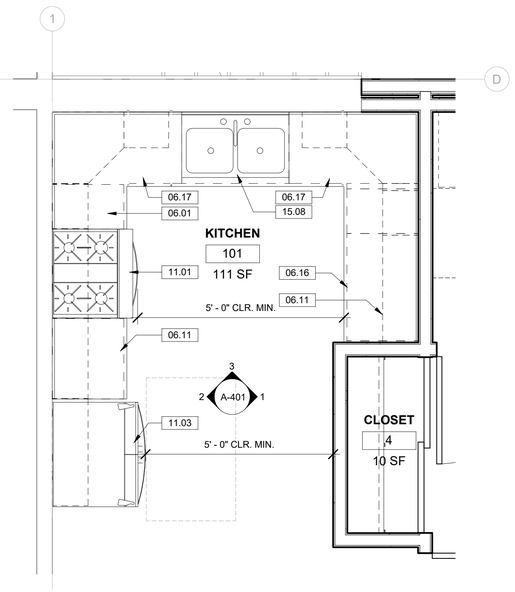

7 ENLARGED - ACCESSIBLE KITCHEN
1/2" = 1'-0"

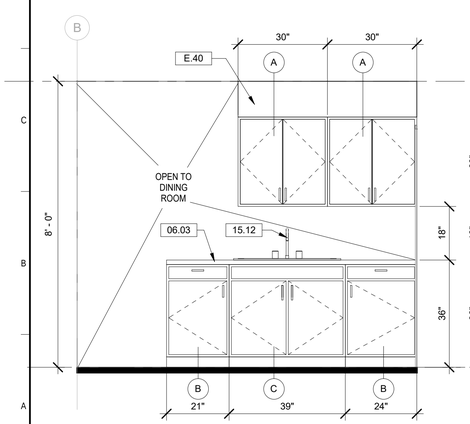

4 STANDARD KITCHEN ELEVATION
1/2" = 1'-0"

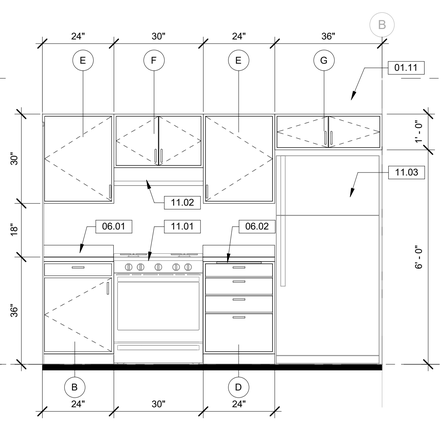

5 STANDARD KITCHEN ELEVATION
1/2" = 1'-0"

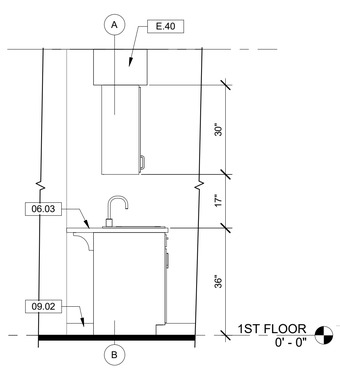

6 NEW KITCHEN COUNTER ELEVATION
1/2" = 1'-0"

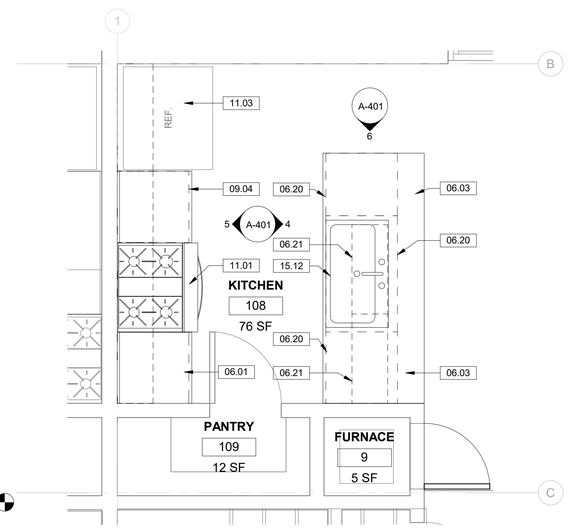

8 ENLARGED - STANDARD KITCHEN
1/2" = 1'-0"

KEYNOTES - EXISTING TO REMAIN

E.40	EXISTING SOFFIT

KEYNOTES

01.11	OPEN TO WALL ABOVE CABINETS
06.01	24" COUNTERTOP WITH 4" BACKSPLASH, ROUNDED CORNERS
06.02	15" PULL-OUT BREADBOARD
06.03	ISLAND COUNTER TOP
06.11	ACCESSIBLE CASE WORK WITH ADJUSTABLE SHELVES, TYP.
06.14	ACCESSIBLE BASE DRAWER UNIT
06.16	ACCESSIBLE BASE CABINET
06.17	ACCESSIBLE BASE CABINET WITH EXTENDED SHELVING, NO PARTITION
06.18	SAFETY TRIM AT UPPER CABINET, TYP.
06.20	BASE CABINET
06.21	UPPER CABINET
09.02	4" WALL BASE (PER SCHEDULE)
09.03	GYPSUM BOARD, PAINTED
09.04	INSTALL NEW GYPSUM WALLBOARD PREP AND PAINT PER SCHEDULE
11.01	ENERGY STAR RANGE/ OVEN
11.02	RANGE HOOD
11.03	ENERGY STAR, ADA REFRIGERATOR
15.08	ACCESSIBLE KITCHEN SINK WITH PROTECTIVE INSULATED COVER FOR DRAIN PIPE, FAUCET TO BE ACCESSIBLE - REFER TO 2/A-502
15.09	WALL MOUNTED FURNACE - WILLIAMS #2509622, REFER TO MECHANICAL PLANS
15.12	KITCHEN SINK

CASEWORK SCHEDULE

MARK	TYPE	DEPTH
A	UPPER - DOUBLE DOOR	1' - 0"
B	BASE - SINGLE DOOR WITH DRAWER	2' - 0"
C	BASE - SINK UNIT WITH DOUBLE DOORS	2' - 0"
D	BASE - 4 DRAWERS WITH BREAD BOARD	2' - 0"
E	UPPER - SINGLE DOOR	1' - 0"
F	UPPER - DOUBLE DOOR ABOVE STOVE/OVEN	1' - 0"
G	UPPER - DOUBLE DOOR ABOVER REFRIGERATOR	1' - 0"
H	UPPER - ACCESSIBLE CORNER UNIT	1' - 0"
J	UPPER - ACCESSIBLE SINGLE DOOR	1' - 0"
K	UPPER - ACCESSIBLE DOUBLE DOOR	1' - 0"
L	BASE - ACCESSIBLE 4 DRAWER	2' - 0"
M	BASE - ACCESSIBLE DOUBLE DOOR W/ 15" BREAD BOARD	2' - 0"
N	UPPER - ACCESSIBLE ABOVE STOVE/OVEN	1' - 0"
P	BASE - ACCESSIBLE SINGLE DOOR	2' - 0"
Q	BASE - ACCESSIBLE CORNER CABINET WITH EXTENDED SHELVES	2' - 0"
S	BASE - ACCESSIBLE OPEN SINK UNIT	2' - 0"

GENERAL NOTES

1. PROVIDE SHOP DRAWINGS FOR CASEWORK.
2. THERE SHALL BE NO SHARP OR ABRASIVE SURFACES UNDER THE SINK.
3. FOR APPLIANCES SEE APPLIANCE SCHEDULE ON SHEET A-601
4. FOR ADDITIONAL REQUIRED CLEARANCES AND HEIGHT DIMENSIONS TO CONFORM WITH ACCESSIBILITY REQUIREMENTS SEE SHEET A-502.

LEGEND

(A) CASEWORK PER PLANS AND SCHEDULE ON SHEET A-602

0' 1' 2' 4' 8'

LAUTERBACH & ASSOCIATES
ARCHITECTS INC.
David C. Kesterson, Architect • Ilona Scott, Architect • Mark S. Pettit, Architect
300 MONTGOMERY AVENUE, OXNARD, CALIFORNIA 93036 | 805-988-0912 | FAX 805-981-4510 | www.la-arch.com

LICENSED ARCHITECT
ILONA SCOTT
No. C11881
Ren. 06/21
STATE OF CALIFORNIA

FASHION PARK APARTMENTS

234, 251 & 257 FASHION PARK
OXNARD, CA, 93036

CITY OF OXNARD HOUSING AUTHORITY

435 S. D STREET
OXNARD, CALIFORNIA 93030

NO	DESCRIPTION	DATE
1	PI ch submittal	04/08/2020

ISSUE

JOB NO. 20-190709

DRAWN BY: TJL
CHECKED BY: ISS
PROJECT MANAGER: ISS
PRINT DATE: 4/8/2020 2:59:56 AM

LSV - KITCHENS

A-401

THESE DRAWINGS AND SPECIFICATIONS ARE THE PROPERTY AND COPYRIGHT OF LAUTERBACH & ASSOCIATES. ALL RIGHTS RESERVED, AND SHALL NOT BE USED ON ANY OTHER WORK OR PROJECT EXCEPT BY WRITTEN AGREEMENT WITH LAUTERBACH & ASSOCIATES. WRITTEN DIMENSIONS SHALL TAKE PRECEDENCE OVER SCALED DIMENSIONS AND SHALL BE VERIFIED ON THE JOB SITE. ANY DISCREPANCY SHALL BE BROUGHT TO THE NOTICE OF LAUTERBACH & ASSOCIATES PRIOR TO COMMENCEMENT OF ANY WORK.

G:\2019 Projects\20-190709 City of Oxnard\Set 4-Fashion\Drawings\Architectural\20-190709 City of Oxnard - 234, 251, & 257 Fashion Park Apartments - CD.rvt

KEYNOTES

09.02	4" WALL BASE (PER SCHEDULE)
09.03	GYPSUM BOARD, PAINTED
10.01	42" GRAB BAR
10.02	36" GRAB BAR
10.03	MEDICINE CABINET
10.05	TOWEL RING
10.07	TOILET TISSUE HOLDER
10.09	CURTAIN ROD
15.02	FIBERGLASS BATH TUB/SHOWER ENCLOSURE, ACCESSIBLE BARS AND REMOVABLE SEAT
15.03	WATER CLOSET

CASEWORK SCHEDULE

MARK	TYPE	DEPTH
A	UPPER - DOUBLE DOOR	1' - 0"
B	BASE - SINGLE DOOR WITH DRAWER	2' - 0"
C	BASE - SINK UNIT WITH DOUBLE DOORS	2' - 0"
D	BASE - 4 DRAWERS WITH BREAD BOARD	2' - 0"
E	UPPER - SINGLE DOOR	1' - 0"
F	UPPER - DOUBLE DOOR ABOVE STOVE/OVEN	1' - 0"
G	UPPER - DOUBLE DOOR ABOVER REFRIGERATOR	1' - 0"
H	UPPER - ACCESSIBLE CORNER UNIT	1' - 0"
J	UPPER - ACCESSIBLE SINGLE DOOR	1' - 0"
K	UPPER - ACCESSIBLE DOUBLE DOOR	1' - 0"
L	BASE - ACCESSIBLE 4 DRAWER	2' - 0"
M	BASE - ACCESSIBLE DOUBLE DOOR W/ 15" BREAD BOARD	2' - 0"
N	UPPER - ACCESSIBLE ABOVE STOVE/OVEN	1' - 0"
P	BASE - ACCESSIBLE SINGLE DOOR	2' - 0"
Q	BASE - ACCESSIBLE CORNER CABINET WITH EXTENDED SHELVES	2' - 0"
S	BASE - ACCESSIBLE OPEN SINK UNIT	2' - 0"

GENERAL NOTES

1. PROVIDE SHOP DRAWINGS FOR CASEWORK.
2. THERE SHALL BE NO SHARP OR ABRASIVE SURFACES UNDER THE SINK.
3. FOR APPLIANCES SEE APPLIANCE SCHEDULE ON SHEET A-601
4. FOR ADDITIONAL REQUIRED CLEARANCES AND HEIGHT DIMENSIONS TO CONFORM WITH ACCESSIBILITY REQUIREMENTS SEE SHEET A-502.

LEGEND

(A) CASEWORK PER PLANS AND SCHEDULE ON SHEET A-602

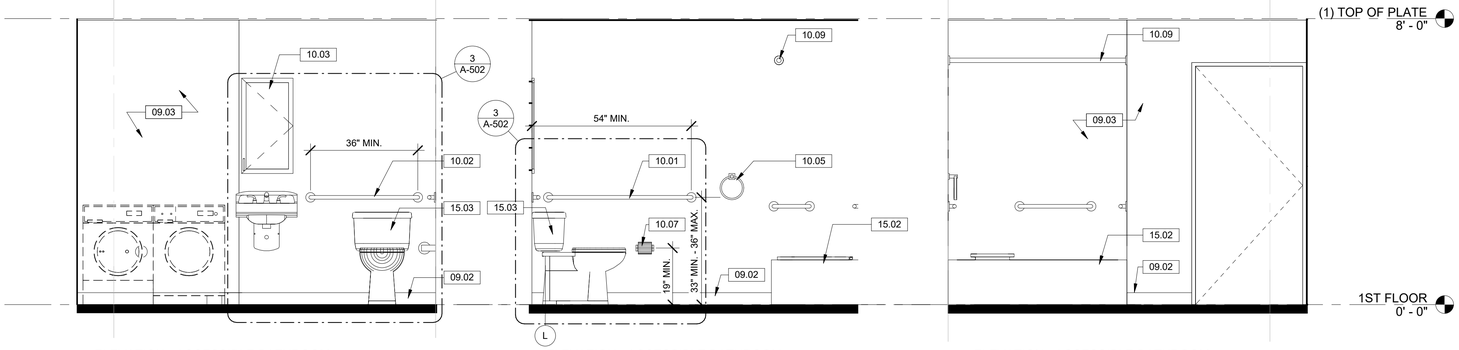

1 ELEVATION - ACCESSIBLE BATHROOM
1/2" = 1'-0"

2 ELEVATION - ACCESSIBLE BATHROOM
1/2" = 1'-0"

3 ELEVATION - ACCESSIBLE BATHROOM
1/2" = 1'-0"

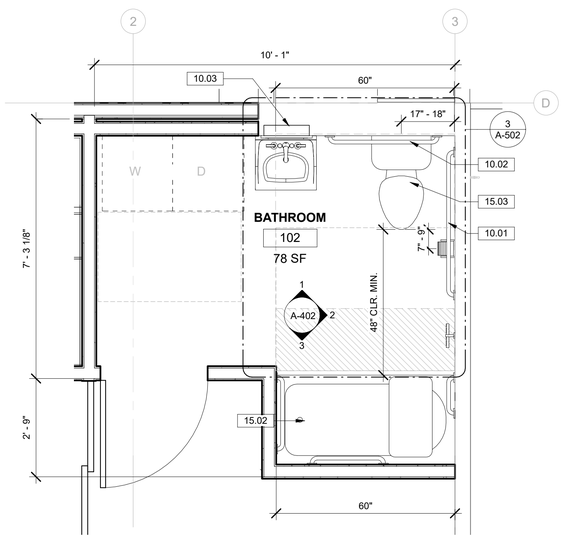

4 ENLARGED - ACCESSIBLE BATHROOM/ LAUNDRY
1/2" = 1'-0"

0' 1' 2' 4' 8'

LAUTERBACH & ASSOCIATES
ARCHITECTS INC.
David C. Kesterson, Architect • Ilona Scott, Architect • Mark S. Pettit, Architect
300 MONTGOMERY AVENUE, OXNARD, CALIFORNIA 93036 | 805-988-0912 | FAX 805-981-4510 | www.la-arch.com

LICENSED ARCHITECT
ILONA SCOTT
No. C11881
Ren. 06/21
STATE OF CALIFORNIA

FASHION PARK APARTMENTS

234, 251 & 257 FASHION PARK
OXNARD, CA, 93036

CITY OF OXNARD HOUSING AUTHORITY

435 S. D STREET
OXNARD, CALIFORNIA 93030

NO	DESCRIPTION	DATE
1	PI ch submittal	04/08/2020

ISSUE

JOB NO. 20-190709

DRAWN BY: TJL
CHECKED BY: ISS
PROJECT MANAGER: ISS
PRINT DATE: 4/8/2020 2:58:54 AM

LSV - BATHROOM

A-402

THESE DRAWINGS AND SPECIFICATIONS ARE THE PROPERTY AND COPYRIGHT OF LAUTERBACH & ASSOCIATES. ALL RIGHTS RESERVED, AND SHALL NOT BE USED ON ANY OTHER WORK OR PROJECT EXCEPT BY WRITTEN AGREEMENT WITH LAUTERBACH & ASSOCIATES. WRITTEN DIMENSIONS SHALL TAKE PRECEDENCE OVER SCALED DIMENSIONS AND SHALL BE VERIFIED ON THE JOB SITE. ANY DISCREPANCY SHALL BE BROUGHT TO THE NOTICE OF LAUTERBACH & ASSOCIATES PRIOR TO COMMENCEMENT OF ANY WORK.

G:\2019 Projects\20-190709 City of Oxnard-Set 4-Fashion\Drawings\Architectural\20-190709 City of Oxnard - 234, 251, & 257 Fashion Park Apartments - CD.rvt

INTERNATIONAL SYMBOL OF ACCESSIBILITY

PAINTED FIELD:
BLUE TRAFFIC PAINT
3'-0" SQUARE WITH
3" RADIUS CORNERS

PAINTED SYMBOL:
WHITE TRAFFIC PAINT
MIN. 3" WIDE STRIPING

5 ACCESS - Symbol of Accessiblity
3/4" = 1'-0"

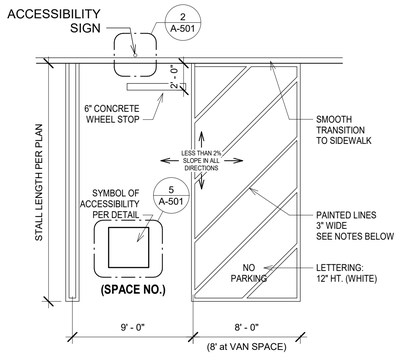

NOTE: ACCESS COMPLAINT STALLS TO BE STRIPED WITH BLUE PAINT

4 ACCESS - Parking Stall - Van
3/16" = 1'-0"

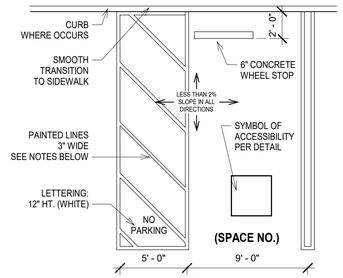

NOTE: ACCESS COMPLAINT STALLS TO BE STRIPED WITH BLUE PAINT

3 ACCESS - Parking Stall - Standard
3/16" = 1'-0"

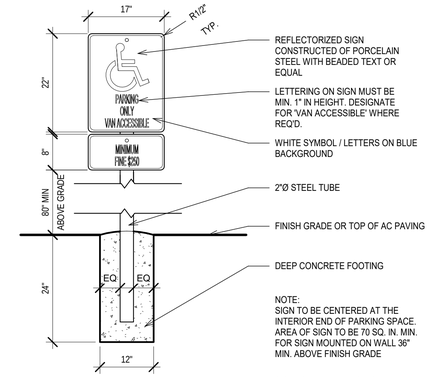

2 ACCESS - parking stall sign
3/4" = 1'-0"

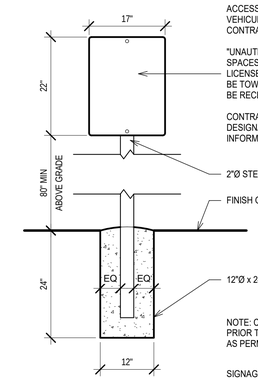

ACCESSIBLE WARNING SIGNAGE TO BE POSTED AT ALL VEHICULAR ENTRANCES, WITH MIN 1" LETTERING ON CONTRASTING BACKGROUND TO READ:

"UNAUTHORIZED VEHICLES PARKED IN DESIGNATED ACCESSIBLE SPACES NOT DISPLAYING DISTINGUISHING PLACARDS OR SPECIAL LICENSE PLATES ISSUED FOR PERSONS WITH DISABILITIES WILL BE TOWED AWAY AT OWNER'S EXPENSE. TOWED VEHICLES MAY BE RECLAIMED AT ..... OR BY TELEPHONING ....."

CONTRACTOR TO VERIFY WITH JUURISDICTION TO OBTAIN LOCAL DESIGNATED TOWING SERVICE INFOMATION, AND INCLUDE THIS INFORMATION ON SIGN

1 ACCESS - parking lot entrance
3/4" = 1'-0"

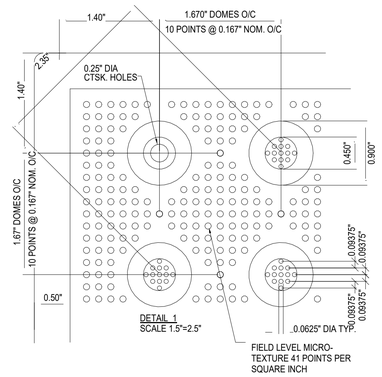

DETAIL 1
SCALE 1.5"=2.5"

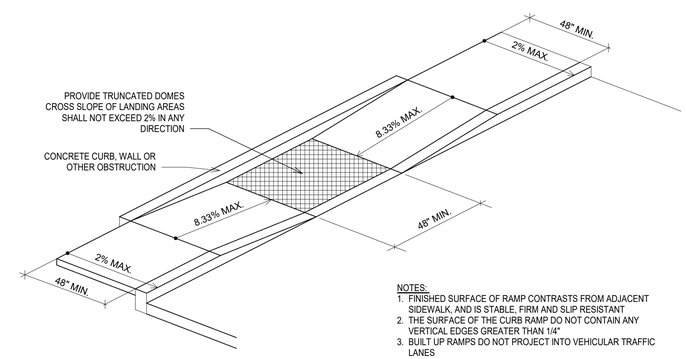

NOTES:
1. FINISHED SURFACE OF RAMP CONTRASTS FROM ADJACENT SIDEWALK, AND IS STABLE, FIRM AND SLIP RESISTANT
2. THE SURFACE OF THE CURB RAMP DO NOT CONTAIN ANY VERTICAL EDGES GREATER THAN 1/4"
3. BUILT UP RAMPS DO NOT PROJECT INTO VEHICULAR TRAFFIC LANES
4. TRANSITIONS FROM RAMP(S) TO WALKS, GUTTERS OR STREETS ARE FLUSH AND FREE OF ABRUPT CHANGES.

6 ACCESS - curb ramp
1/4" = 1'-0"

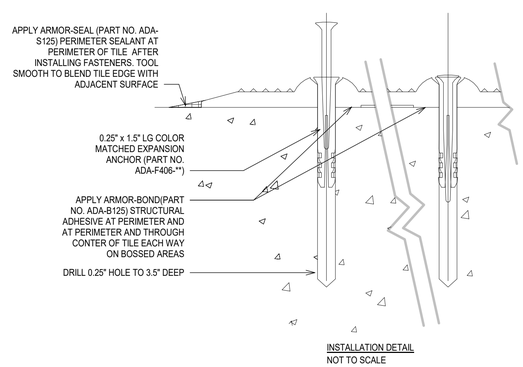

INSTALLATION DETAIL
NOT TO SCALE

9 ACCESS - truncated dome paver
1 1/2" = 1'-0"

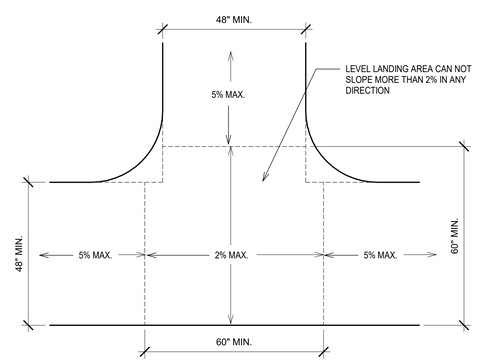

7 ACCESS - landing at walkway intersection
1/2" = 1'-0"

THESE DRAWINGS AND SPECIFICATIONS ARE THE PROPERTY AND COPYRIGHT OF LAUTERBACH & ASSOCIATES. ALL RIGHTS RESERVED, AND SHALL NOT BE USED ON ANY OTHER WORK OR PROJECT EXCEPT BY WRITTEN AGREEMENT WITH LAUTERBACH & ASSOCIATES. WRITTEN DIMENSIONS SHALL TAKE PRECEDENCE OVER SCALED DIMENSIONS AND SHALL BE VERIFIED ON THE JOB SITE. ANY DISCREPANCY SHALL BE BROUGHT TO THE NOTICE OF LAUTERBACH & ASSOCIATES PRIOR TO COMMENCEMENT OF ANY WORK.

LAUTERBACH & ASSOCIATES
ARCHITECTS • INC.
David C. Kesterson, Architect • Ilona Scott, Architect • Mark S. Pettit, Architect
300 MONTGOMERY AVENUE, OXNARD, CALIFORNIA 93036 | 805-988-0912 | FAX 805-981-4510 | www.la-arch.com

LICENSED ARCHITECT
ILONA SCOTT
No. C11881
Ren. 06/21
STATE OF CALIFORNIA

FASHION PARK APARTMENTS
234, 251 & 257 FASHION PARK
OXNARD, CA, 93036

CITY OF OXNARD HOUSING AUTHORITY
435 S. D STREET
OXNARD, CALIFORNIA 93030

NO	DESCRIPTION	DATE
1	PI ch submittal	04/08/2020

ISSUE

JOB NO. 20-190709

DRAWN BY: TJL
CHECKED BY: ISS
PROJECT MANAGER: ISS
PRINT DATE: 4/8/2020 2:57:41 AM

SITE DETAILS

A-501

G:\2019 Projects\20-190709 City of Oxnard-Set 4-Fashion\Drawings\Architectural\20-190709 City of Oxnard - 234, 251, & 257 Fashion Park Apartments - CD.rvt

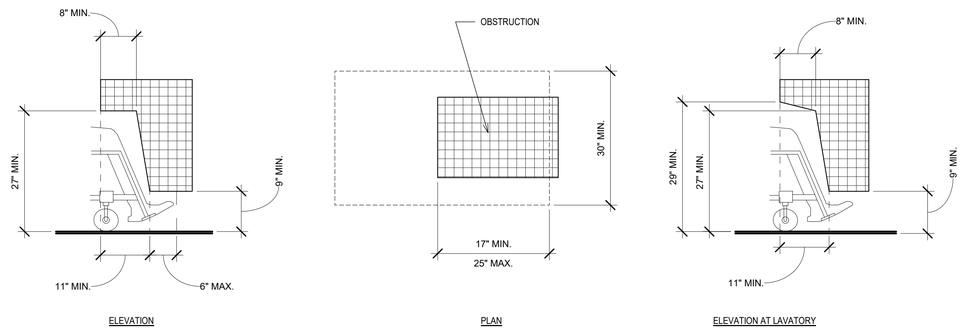

2 ACCESS - knee and toe space
3/4" = 1'-0"

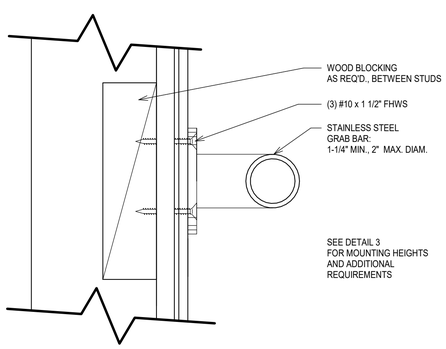

4 ACCESS - grab bar mounting
6" = 1'-0"

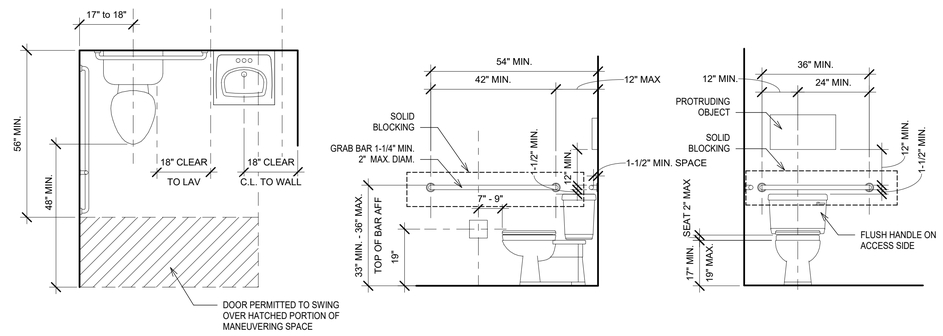

3 ACCESS - typical restroom
1/2" = 1'-0"

NOTES:

1. CONSTRUCTION MUST COMPLY WITH CALIFORNIA TITLE 24 REQUIREMENTS
2. THE REQUIRED CLEARANCE AROUND THE WATER CLOSET SHALL BE PERMITTED TO OVERLAP THE WATER CLOSET, ASSOCIATED GRAB BARS, DISPENSERS, SANITARY NAPKIN DISPOSAL UNITS, COAT HOOKS, SHELVES, ACCESSIBLE ROUTES, CLEAR FLOOR SPACE AND CLEARANCES REQUIRED AT OTHER FIXTURES, AND THE TURNING SPACE. NO OTHER FIXTURES OR OBSTRUCTIONS SHALL BE LOCATED WITHIN THE REQUIRED WATER CLOSET CLEARANCE.
3. SEATS SHALL NOT BE SPRUNG TO RETURN TO A LIFTED POSITION
4. THE REAR GRAB BAR SHALL BE PERMITTED TO BE 24 INCHES LONG MINIMUM, CENTERED ON THE WATER CLOSET, WHERE WALL SPACE DOES NOT PERMIT A LENGTH OF 36 INCHES MINIMUM DUE TO THE LOCATION OF A RECESSED FIXTURE ADJACENT TO THE WATER CLOSET.
5. FLUSH CONTROLS SHALL BE HAND OPERATED OR AUTOMATIC. CONTROLS SHALL BE LOCATED 44 INCHES MAXIMUM ABOVE THE FLOOR.
6. TOILET PAPER DISPENSERS SHALL NOT BE OF A TYPE THAT CONTROLS DELIVERY OR THAT DOES NOT ALLOW CONTINUOUS PAPER FLOW.

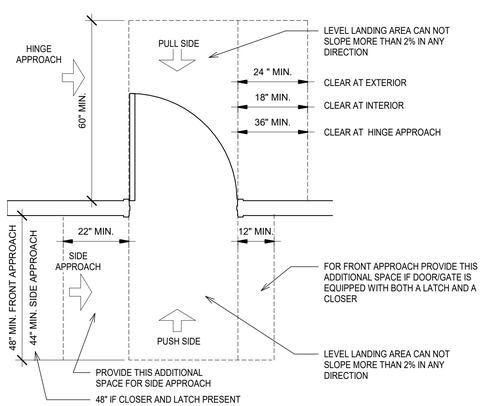

7 ACCESS - door clearances
1/2" = 1'-0"

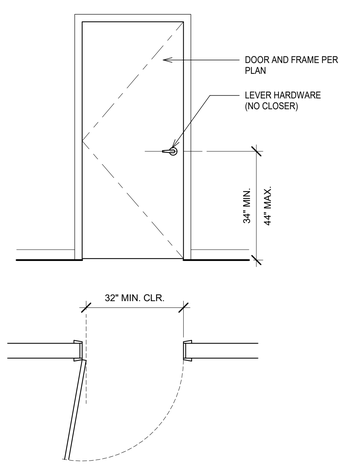

6 ACCESS - interior door clearances
1/2" = 1'-0"

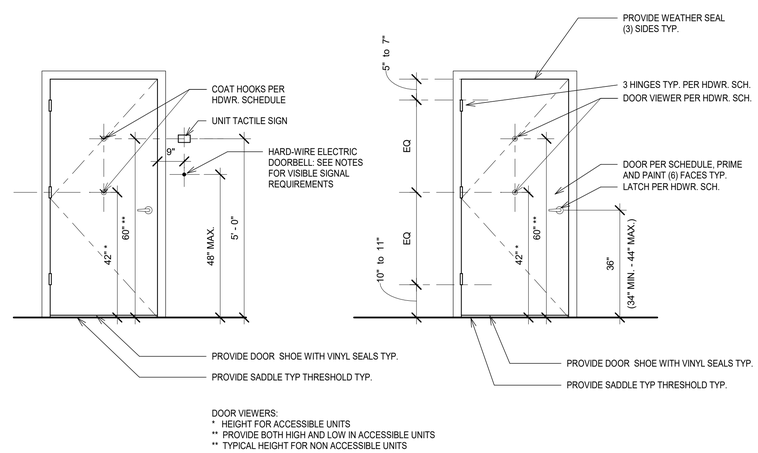

5 DOOR - typical door requirements
1/2" = 1'-0"

GENERAL NOTES:

1. HARDWARE. DOOR HANDLES, PULLS, LATCHE3S, LOCKS AND OTHER OPERATING DEVICES ON DOORS REQUIRED TO BE ACCESSIBLE SHALL NOT REQUIRE TIGHT GRASPING TIGHT PINCHING OR TWISTING OF THE WRIST TO OPERATE. (1008.1.9.1)
2. DOOR CLOSERS AND GATE CLOSERS SHALL BE ADJUSTED SO THAT FROM AN OPEN POSITION OF 90 DEGREES, THE TIME REQUIRED TO MOVE THE DOOR TO A POSITION OF 12 DEGREES FROM THE LATCH IS 5 SECONDS MINIMUM. (11B-404.2.8)
3. DOOR AND GATE SPRING HINGES SHALL BE ADJUSTED SO THAT FROM THE OPEN POSITION OF 70 DEGREES, THE DOOR OR GATE SHALL MOVE TO THE CLOSED POSITION IN 1.5 SECONDS MINIMUM.
4. THE FORCE FOR PUSHING OR PULLING A OPEN DOOR OR GATE OTHER THAN A FIRE DOOR SHALL BE AS FOLLOWS:
   a. INTERIOR HINGED DOORS AND GATES: 5 POUNDS MAXIMUM.
   b. SLIDING OR FOLDING DOORS: 5 POUNDS MAXIMUM.
   c. REQUIRED FIRE DOORS: THE MINIMUM OPENING FORCE ALLOWABLE BY THE APPROPRIATE ADMINISTRATIVE AUTHORITY, NOT TO EXCEED 15 POUNDS
   d. EXTERIOR HINGED DOORS: 5 POUNDS MAXIMUM
5. SWING DOOR AND GATE SURFACES WITHIN 10 INCHES OF THE FINISH FLOOR OR GROUND MEASURED VERTICALLY SHALL HAVE A SMOOTH SURFACE ON THE PUSH SIDE EXTENDING THE FULL WIDTH OF THE DOOR OR GATE. PARTS CREATING HORIZONTAL OR VERTICAL JOINTS IN THESE SURFACES SHALL BE WITHIN 1/16 INCH OF THE SAME PLANE AS THE OTHER AND BE FREE OF SHARP OR ABRASIVE EDGES. CAVITIES CREATED BY ADDED KICK PLATES SHALL BE CAPPED.
6. DOORS, GATES, AND SIDE LIGHTS ADJACENT TO DOORS OR GAT4ES, CONTAINING ONE OR MORE GLAZING PANELS THAT PERMIT VIEWING THROUGH THE PANELS SHALL HAVE THE BOTTOM OF AT LEAST ONE GLAZED PANEL LOCATED 43 INCHES MAXIMUM ABOVE THE FINISH FLOOR.
   a. EXCEPTION: GLAZING PANELS WITH THE LOWEST PART MORE THAN 86 INCHES FROM THE FINISH FLOOR OR GROUND SHALL NOT BE REQUIRED TO COMPLY.
7. DOORWAYS SHALL PROVIDE A CLEAR OPENING OF 32 INCHE3S MINIMUM IN POWER-ON AND POWER-OFF MODE. THE MINIMUM CLEAR WIDTH FOR AUTOMATIC DOOR SYSTEMS IN A DOORWAY SHALL PROVIDE A CLEAR, UNOBSTRUCTED OPENING OF 32 INCHES WITH ONE LEAF POSITIONED AT AN ANGLE OF 90 DEGREES FROM ITS CLOSED POSITION.

LAUTERBACH & ASSOCIATES
ARCHITECTS INC.
David C. Kesterson, Architect • Ilona Scott, Architect • Mark S. Pettit, Architect
300 MONTGOMERY AVENUE, OXNARD, CALIFORNIA 93036 | 805-988-0912 | FAX 805-981-4510 | www.la-arch.com

LICENSED ARCHITECT
ILONA SCOTT
No. C11881
Ren. 06/21
STATE OF CALIFORNIA

FASHION PARK APARTMENTS

234, 251 & 257 FASHION PARK
OXNARD, CA, 93036

CITY OF OXNARD HOUSING AUTHORITY

435 S. D STREET
OXNARD, CALIFORNIA 93030

NO	DESCRIPTION	DATE
1	PI ch submittal	04/08/2020

ISSUE

JOB NO. 20-190709

DRAWN BY: TJL
CHECKED BY: ISS
PROJECT MANAGER: ISS
PRINT DATE: 4/8/2020 2:56:05 AM

ACCESSIBLE DETAILS

A-502

THESE DRAWINGS AND SPECIFICATIONS ARE THE PROPERTY AND COPYRIGHT OF LAUTERBACH & ASSOCIATES. ALL RIGHTS RESERVED, AND SHALL NOT BE USED ON ANY OTHER WORK OR PROJECT EXCEPT BY WRITTEN AGREEMENT WITH LAUTERBACH & ASSOCIATES. WRITTEN DIMENSIONS SHALL TAKE PRECEDENCE OVER SCALED DIMENSIONS AND SHALL BE VERIFIED ON THE JOB SITE. ANY DISCREPANCY SHALL BE BROUGHT TO THE NOTICE OF LAUTERBACH & ASSOCIATES PRIOR TO COMMENCEMENT OF ANY WORK.

G:\2019 Projects\20-190709 City of Oxnard Set 4-Fashion\Drawings\Architectural\20-190709 City of Oxnard - 234, 251, & 257 Fashion Park Apartments - CD.rvt

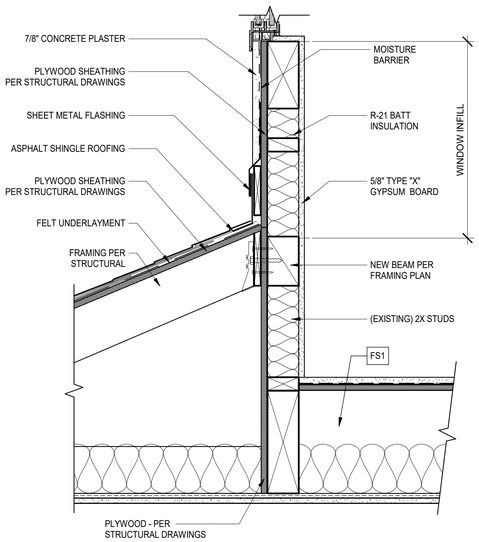

14 ROOF AT FIRST FLOOR ADDITION1
1 1/2" = 1'-0"

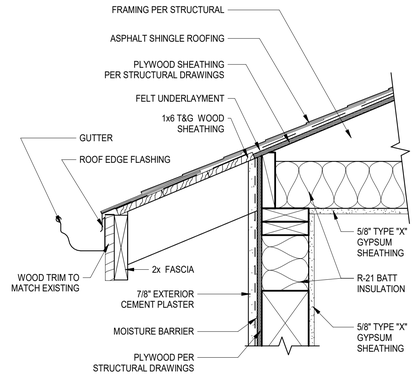

10 ROOF EAVE AT EXTERIOR NEW WALL1
1 1/2" = 1'-0"

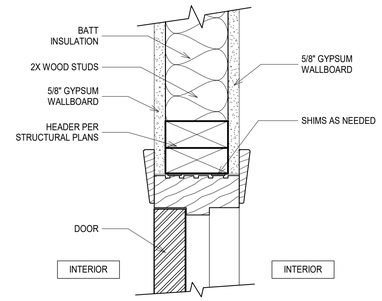

7 DOOR HEAD - INTERIOR
3" = 1'-0"

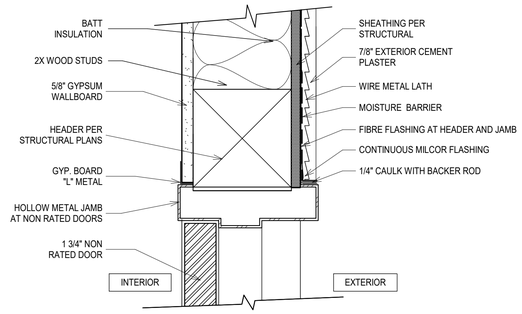

4 DOOR HEAD - EXTERIOR AT WATER HEATER ENCLOSURE
3" = 1'-0"

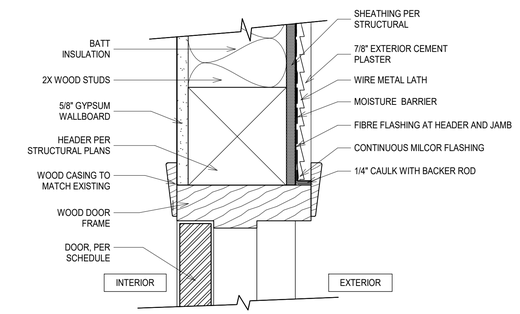

3 DOOR HEAD - EXTERIOR ENTRANCE
3" = 1'-0"

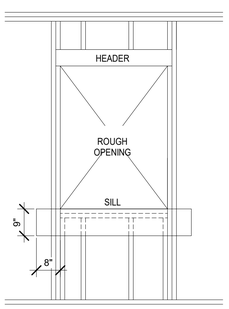

A

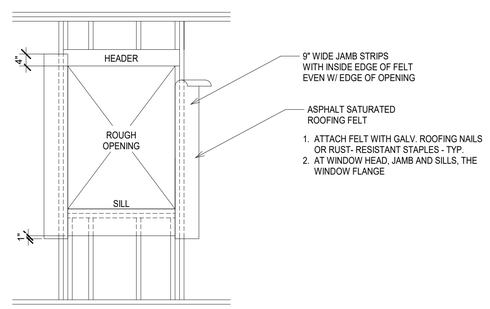

B

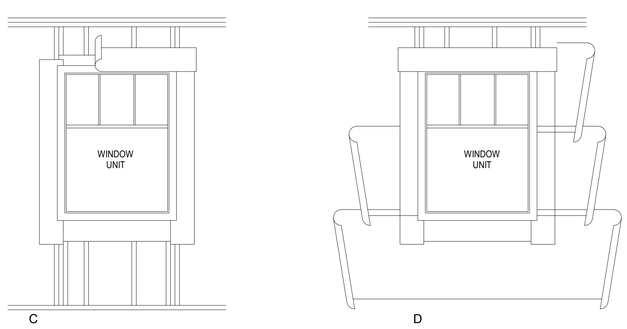

C D

12 WINDOWS - TYPICAL FLASHINGS
1/2" = 1'-0"

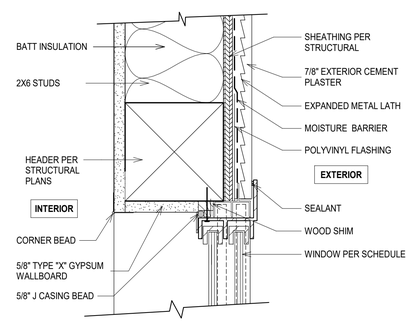

6 WINDOW HEAD - EXTERIOR CEMENT PLASTER
3" = 1'-0"

2 DOOR - INTERIOR ACCESSIBLE THRESHOLD
3" = 1'-0"

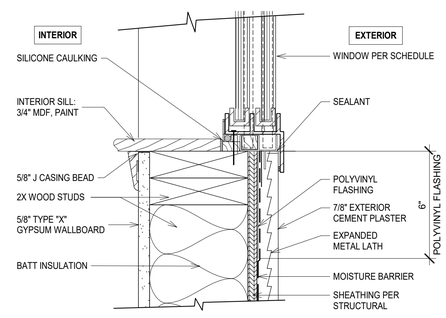

5 WINDOW SILL - EXTERIOR CEMENT PLASTER
3" = 1'-0"

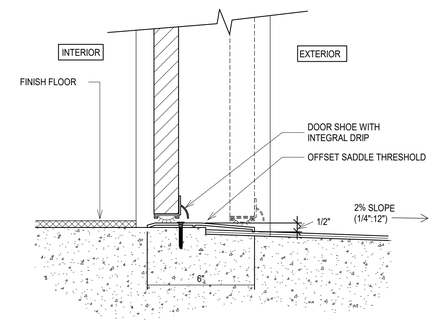

1 DOOR THRESHOLD - ACCESSIBLE (AT SLAB ON GRADE)
3" = 1'-0"

LAUTERBACH & ASSOCIATES
ARCHITECTS INC.
David C. Kesterson, Architect • Ilona Scott, Architect • Mark S. Pettit, Architect
300 MONTGOMERY AVENUE, OXNARD, CALIFORNIA 93036 | 805-988-0912 | FAX 805-981-4510 | www.la-arch.com

LICENSED ARCHITECT ILONA SCOTT No. C11881 Ren. 06/21 STATE OF CALIFORNIA

FASHION PARK APARTMENTS

234, 251 & 257 FASHION PARK
OXNARD, CA, 93036

CITY OF OXNARD HOUSING AUTHORITY

435 S. D STREET
OXNARD, CALIFORNIA 93030

NO	DESCRIPTION	DATE
1	PI ch submittal	04/08/2020

ISSUE

JOB NO.	20-190709
DRAWN BY:	TJL
CHECKED BY:	ISS
PROJECT MANAGER:	ISS
PRINT DATE:	4/8/2020 2:55:11 AM

ROOF, DOOR & WINDOW DETAILS

A-503

THESE DRAWINGS AND SPECIFICATIONS ARE THE PROPERTY AND COPYRIGHT OF LAUTERBACH & ASSOCIATES. ALL RIGHTS RESERVED, AND SHALL NOT BE USED ON ANY OTHER WORK OR PROJECT EXCEPT BY WRITTEN AGREEMENT WITH LAUTERBACH & ASSOCIATES. WRITTEN DIMENSIONS SHALL TAKE PRECEDENCE OVER SCALED DIMENSIONS AND SHALL BE VERIFIED ON THE JOB SITE. ANY DISCREPANCY SHALL BE BROUGHT TO THE NOTICE OF LAUTERBACH & ASSOCIATES PRIOR TO COMMENCEMENT OF ANY WORK.

G:\2019 Projects\20-190709 City of Oxnard-Sec 4-Fashion\Drawings\Architectural\20-190709 City of Oxnard - 234, 251, & 257 Fashion Park Apartments - CD.rvt

DOOR SCHEDULE - RESIDENTIAL

ROOM	DOOR	WIDTH	HEIGHT	THICKNESS	TYPE	MATERIAL	FINISH	FRAME TYPE	COMMENTS
ENTRY - LIVING ROOM	100	3' - 0"	6' - 8"	0' - 1 3/4"	A	Wood	Paint	Wood	
BATHROOM	102	3' - 0"	6' - 8"	0' - 1 3/4"	B	Wood	Paint	Wood	
BEDROOM	103	3' - 0"	6' - 8"	0' - 1 3/4"	B	Wood	Paint	Wood	
BEDROOM CLOSET	103A	4' - 11"	6' - 8"		C	Wood	Paint	Wood	
ENTRY - LIVING ROOM	106	3' - 0"	6' - 8"	0' - 1 3/4"	A	Wood	Paint	Wood	
FURNACE	107B	1' - 10"	5' - 4"	0' - 1 3/4"	E	Wood	Paint	Wood	
ENCLOSURE	112	3' - 0"	6' - 8"	0' - 1 3/4"	D	Metal	Paint	Metal	

WINDOW SCHEDULE

MARK	WIDTH	HEIGHT	HEAD HEIGHT	WINDOW TYPE	U-VALUE	SOLAR HEAT GAIN COEFFICIENT	Comments
A	3' - 10"	5' - 10"		Vinyl Windows	0.3	0.23	
B	3' - 10"	4' - 0"		Vinyl Windows	0.3	0.23	

ROOM FINISH SCHEDULE

NUMBER	NAME	AREA	FLOOR FINISH	BASE FINISH	WALL FINISH	CEILING FINISH	COMMENTS
100	LIVING ROOM	112 SF	SV.1		GB-Paint	GB-Paint	
101	KITCHEN	111 SF	SV.1		GB-Paint	GB-Paint	
102	BATHROOM	78 SF	SV.1		GB-Paint	GB-Paint	
103	BEDROOM	121 SF	SV.1		GB-Paint	GB-Paint	
104	ENTRY	30 SF	SV.1		GB-Paint	GB-Paint	
105	VESTIBULE	41 SF	SV.1		GB-Paint	GB-Paint	
106	CLOSET	5 SF			GB-Paint	GB-Paint	
107	DINING ROOM	143 SF	SV.1		GB-Paint	GB-Paint	
108	KITCHEN	76 SF	SV.1		GB-Paint	GB-Paint	
109	PANTRY	12 SF	SV.1		GB-Paint	GB-Paint	
110	LAUNDRY	55 SF	SV.1		GB-Paint	GB-Paint	
111	STAIR	43 SF			GB-Paint	GB-Paint	
112	HEATER ENCLOSURE	10 SF					
201	VESTIBULE	45 SF	SV.1		GB-Paint	(E)	
202	BATHROOM	42 SF	SV.1		(E)	(E)	(E) CLEAN AND PAINT ONLY
203	BEDROOM 2	118 SF	SV.1		GB-Paint	(E)	
204	BEDROOM 1	139 SF	SV.1		GB-Paint	(E)	
205	LIVING ROOM	245 SF	SV.1		GB-Paint	GB-Paint	

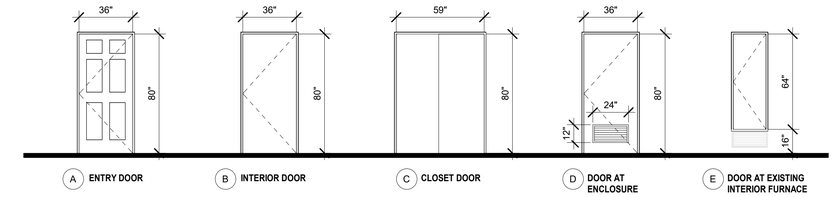

Door Legend
1/4" = 1'-0"

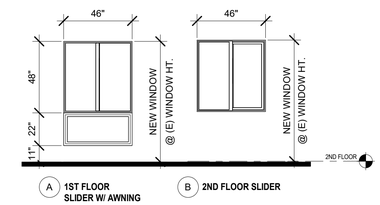

Window Legend
1/4" = 1'-0"

APPLIANCE AND FIXTURE SCHEDULE

ALL APPLIANCES IN ACCESSIBLE UNITS ARE ACCESS COMPLIANT ("ADA"), ALL APPLIANCES ARE ENERGY STAR RATED

- REFRIGERATOR - LG - 26.2 CU. FT. SIDE BY SIDE W/ WATER DISPENSER
  MODEL: LSCS26326D OR SIMILAR
- OVEN - LG - 6.3 CU. FT. STAINLESS STEEL GAS RANGE WITH CONVECTION
  MODEL: LSG4513ST OR SIMILAR
- FIBERGLASS TUB-SHOWER - FREEDOM BATHTUBS 60" x 32.5" ADA
  MODEL: APTG3260TSADA
- TOILET - AMERICAN STANDARD CADET TALL HEIGHT
  MODEL: 3376128ST.020
- BATHROOM SINK - AMERICAN STANDARD - MURRO UNIVERSAL DESIGN
  WALL MOUNTED
  MODEL: 0954.004EC.020 OR SIMILAR
- KITCHEN SINK - MOEN STAINLESS STEEL UNDER-MOUNT DOUBLE BOWL SINK
  MODEL: G18215 OR SIMILAR

THESE DRAWINGS AND SPECIFICATIONS ARE THE PROPERTY AND COPYRIGHT OF LAUTERBACH & ASSOCIATES. ALL RIGHTS RESERVED, AND SHALL NOT BE USED ON ANY OTHER WORK OR PROJECT EXCEPT BY WRITTEN AGREEMENT WITH LAUTERBACH & ASSOCIATES. WRITTEN DIMENSIONS SHALL TAKE PRECEDENCE OVER SCALED DIMENSIONS AND SHALL BE VERIFIED ON THE JOB SITE. ANY DISCREPANCY SHALL BE BROUGHT TO THE NOTICE OF LAUTERBACH & ASSOCIATES PRIOR TO COMMENCEMENT OF ANY WORK.

LAUTERBACH & ASSOCIATES
ARCHITECTS INC.
David C. Kesterson, Architect • Ilona Scott, Architect • Mark S. Pettit, Architect
300 MONTGOMERY AVENUE, OXNARD, CALIFORNIA 93036 | 805-988-0912 | FAX 805-981-4510 | www.la-arch.com

LICENSED ARCHITECT
ILONA SCOTT
No. C11881
Ren. 06/21
STATE OF CALIFORNIA

FASHION PARK APARTMENTS

234, 251 & 257 FASHION PARK
OXNARD, CA, 93036

CITY OF OXNARD HOUSING AUTHORITY

435 S. D STREET
OXNARD, CALIFORNIA 93030

NO	DESCRIPTION	DATE
1	PI ch submittal	04/08/2020

ISSUE

JOB NO. 20-190709

DRAWN BY: TJL
CHECKED BY: ISS
PROJECT MANAGER: ISS
PRINT DATE: 4/8/2020 2:54:09 AM

SCHEDULES

A-601

G:\2019 Projects\20-190709 City of Oxnard-Set 4-Fashion\Drawings\Architectural\20-190709 City of Oxnard - 234, 251, & 257 Fashion Park Apartments - CD.rvt

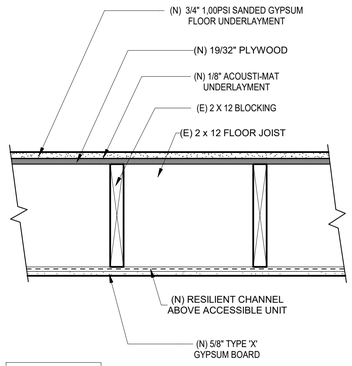

GA FILE NO. FC 5107

F.S.1

REMOVE EXISTING GYP BOARD CEILING AND FLOORING, INSTALL NEW GYP BOARD AND FLOORING FOR A 1 HR FIRE RATED, 50 STC SOUND RATING FLOOR ASSEMBLY

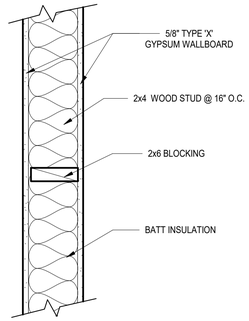

6

NEW INTERIOR 2x6 WALL AT HEATER

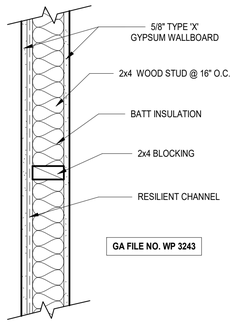

GA FILE NO. WP 3243

5

NEW INTERIOR 2x4 1 HOUR STC 50 SOUND RATED WALL

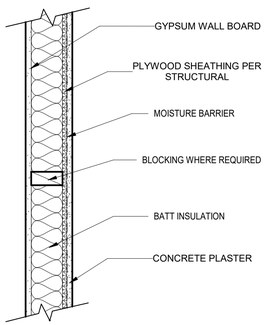

4

NEW EXTERIOR 2x4 WALL

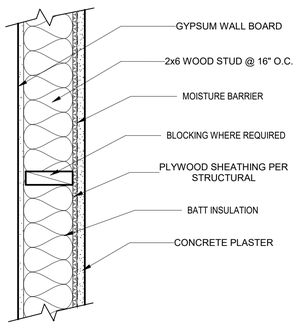

3

NEW EXTERIOR 2x6 WALL

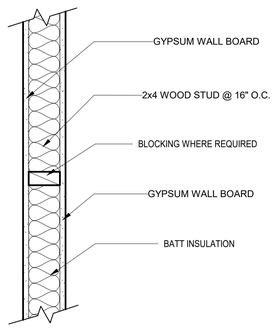

2

NEW INTERIOR 2x4 WALL

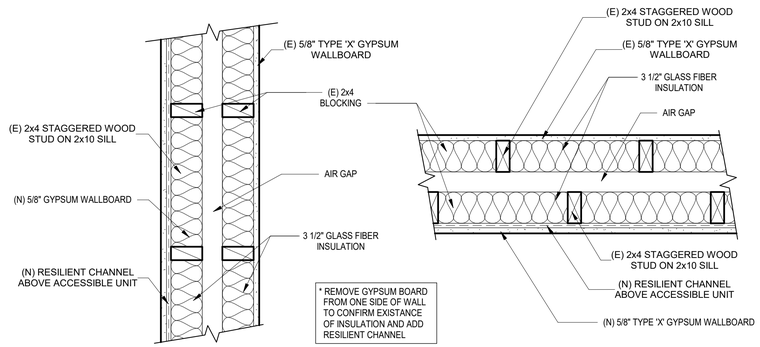

* REMOVE GYPSUM BOARD FROM ONE SIDE OF WALL TO CONFIRM EXISTANCE OF INSULATION AND ADD RESILIENT CHANNEL

GA FILE NO. WP 3112

1

(E) INTERIOR WALL MODIFIED TO COMPLY WITH 1 HOUR RATED 2x10 WALL WITH 50 STC SOUND RATING

WALL LEGEND
1 1/2" = 1'-0"

G:\2019 Projects\20-190709 City of Oxnard-Set 4-Fashion\Drawings\Architectural\20-190709 City of Oxnard - 234, 251, & 257 Fashion Park Apartments - CD.rvt

THESE DRAWINGS AND SPECIFICATIONS ARE THE PROPERTY AND COPYRIGHT OF LAUTERBACH & ASSOCIATES. ALL RIGHTS RESERVED, AND SHALL NOT BE USED ON ANY OTHER WORK OR PROJECT EXCEPT BY WRITTEN AGREEMENT WITH LAUTERBACH & ASSOCIATES. WRITTEN DIMENSIONS SHALL TAKE PRECEDENCE OVER SCALED DIMENSIONS AND SHALL BE VERIFIED ON THE JOB SITE. ANY DISCREPANCY SHALL BE BROUGHT TO THE NOTICE OF LAUTERBACH & ASSOCIATES PRIOR TO COMMENCEMENT OF ANY WORK.

LAUTERBACH & ASSOCIATES
A R C H I T E C T S • I N C.
David C. Kesterson, Architect • Ilona Scott, Architect • Mark S. Pettit, Architect
300 MONTGOMERY AVENUE, OXNARD, CALIFORNIA 93036 | 805-988-0912 | FAX 805-981-4510 | www.la-arch.com

LICENSED ARCHITECT
ILONA SCOTT
No. C11881
Ren. 06/21
STATE OF CALIFORNIA

FASHION PARK APARTMENTS

234, 251 & 257 FASHION PARK
OXNARD, CA, 93036

CITY OF OXNARD HOUSING AUTHORITY

435 S. D STREET
OXNARD, CALIFORNIA 93030

NO	DESCRIPTION	DATE
1	PI ch submittal	04/08/2020

ISSUE

JOB NO. 20-190709

DRAWN BY: TJL
CHECKED BY: ISS
PROJECT MANAGER: ISS
PRINT DATE: 4/8/2020 2:51:51 AM

WALL LEGEND

A-602

MANDATORY MEASURES

Maximum length of flexible duct and connectors shall not be more than 5 feet. Flexible ducts shall not be used in lieu of rigid elbows.

Sec 603.4.1

Each space-conditioning system shall be installed with controls that comply with the following:

1) Capable of automatically shutting off the system during periods of non-use and shall have:
   (1) An automatic time switch control device complying with Sec. 110.9, with an accessible manual override that allows operation of the system for up to 4 hours; or
   (2) An occupancy sensor; or
   (3) A four-hour timer that can be manually operated.
   EXCEPTION: Mechanical systems serving retail stores and associated malls, restaurants, grocery stores, churches, and theaters equipped with 7-day programmable timers.
2) Automatically restart and temporarily operate the system as required to maintain:
   (1) A setback heating thermostat set point, if the system provides mechanical heating;
   EXCEPTION: Area with the design winter outdoor temperature of greater than 32° F.
   (2) A setup cooling thermostat set point, if the system provides mechanical cooling.
   EXCEPTION: Area with the design summer outdoor temperature of less than 100°F.
3) Multipurpose room less than 1000 ft², classrooms greater than 750 ft² and conference, convention, auditorium and meeting center rooms greater than 750 ft² that do not have processes or operations that generate dusts, fumes, vapors or gasses shall be equipped with occupant sensor(s) to accomplish the following during unoccupied periods:
   (1) Automatically setup the operating cooling temperature set point by 2°F or more and setback the operating heating temperature set point by 2°F or more; and
   (2) Automatically reset the minimum required ventilation rate with an occupant sensor ventilation control device according to Section 120.1(c)5.

Exception to Sections 120.2(e)3: If Demand Control Ventilation is implemented as required by Section 120.1(c)3 and 120.1(4).

Sec. 120.2 (e)

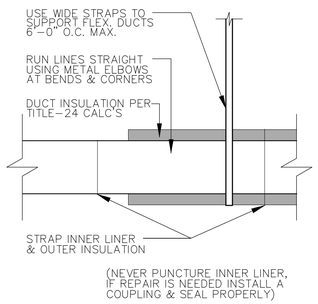

1 FLEX DUCT SUPPORT

SCALE: N.T.S.

EQUIPMENT SCHEDULE

UNIT	TONS	MODEL	COOLING (BTUH)	AFUE	HEATING (BTUH)	CFM	MCA	MOCP	VOLTAGE	WEIGHT (LB.)	LIQUID LINE	VAPOR LINE	REMARKS
FAU-1		CARRIER #59TP5A080E17--16		96.2	78,000 / 50,000	1,360	GAS	GAS	115V 1P 60Hz	156			VERTICAL. PROVIDE DUCT SMOKE DETECTOR
SH-1	2.0 T	WILLAMS COMFORT #3509622A		.81 AFUE	23,700	110 - 162	GAS	GAS	120V 1P 60Hz	57			WALL MOUNTED UNIT
EF-1		PANASONIC FV-10VS1				100	0.2	20	120V	20			INTEGRAL BACKDRAFT DAMPER. INTERLOCK W/ HUMIDISTAT SWITCH

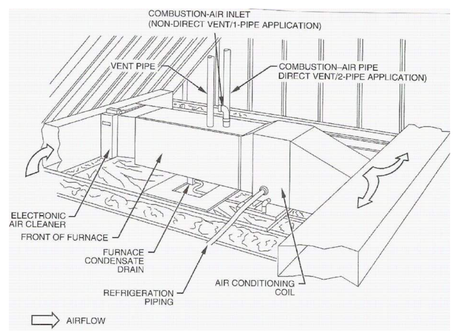

1. Provide an attic access a minimum of 22"x30" not over 20' from the equipment.
2. Provide an unobstructed passageway 30" wide x 30" high with solid continuous flooring from the access to the equipment/control panel. The passageway shall be at least as large as the largest component of the appliance. Provide a level, unobstructed work platform not less than 30"X30" square in front of the equipment with 30" headroom. [§305 CMC]
3. Provide a 120V receptacle and a light near the equipment. The light switch shall be located at the attic access.
4. Provide a 3/4" primary condensate drain. Provide a 3/4" secondary condensate drain line which terminates over a window.
5. All combustion air openings, including attic vents, shall be covered with a corrosion resistant screen with a 1/4" mesh.
6. Solid and liquid lines shall be located a minimum of 6" above the flood level rim of the condensing units.
7. See detail 2/- for equipment support.

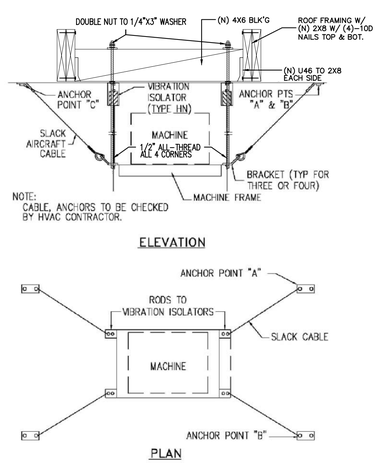

2 EQUIPMENT SUPPORT

SCALE: N.T.S.

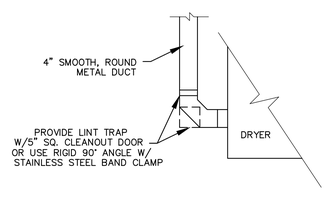

1 VERTICAL DRYER VENT CLEANOUT

SCALE: N.T.S.

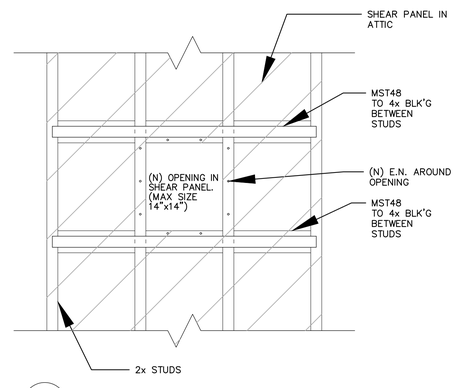

1 DUCT PENETRATIONS

SCALE: N.T.S.

MECHANICAL NOTES

1. All work shall be in accordance and comply with the latest applicable city ordinance and the 2019 CMC.

2. It is the intent of these drawings that this be a complete mechanical installation. Any apparent errors shall be brought to the attention of the designer and/or tenant prior to proceeding.

3. Contractor shall verify all existing conditions versus new installations to assure proper new installations can be completed properly prior to proceeding.

4. These plans shall be used only after approvals and permits have been secured by the proper jurisdiction of the department of building and safety.

5. All drawings and details are provided as a diagrammatic version of the proposed work. The contractor shall be held liable and responsible for all field verifications of equipment, materials, and installations.

6. Contractor shall verify all equipment is installed in accordance with manufacturer's recommendations and local code requirements prior to any installations.

7. All duct work shall be provided, installed, sealed, and insulated per chapter 6 of the 2019 CMC and SMACNA HVAC Duct Construction Standards.

8. Means for interrupting the electrical supply to the air conditioning equipment and to its associated cooling tower shall be provided within sight of and not over 50 ft. from the air-conditioner and cooling tower. [§903.7 CMC]

9. All controls shall be from 36" to 48" AFF max and within sight of the fixtures.

10. Penetrations of fire-resistive walls, floor-ceilings and roof ceilings shall be protected as required in CBC Sections 712.3 & 712.4.

11. Contractor doing the mechanical work is responsible for verifying in the field that the HVAC system is capable of providing the necessary minimum outside air volume.

12. Air balancing may be required and shall be performed by the mechanical contractor doing the work.

13. All OSA intakes and makeup air intakes shall be provided and installed a minimum of 10' away from plumbing, toilet, water closets, and all appliance venting. Intakes may be located 3' below said appliance venting.

14. The contractor shall be solely responsible for construction mean, methods, sequences, of construction and the safety of workmen. Comply with all OSHA regulations.

15. No piping, ductwork, controls, etc., shall be installed or routed above electrical panels and equipment or through elevator rooms or shafts.

16. The mechanical and electrical contractors shall coordinate the electrical characteristics of all mechanical equipment prior to ordering of equipment. No additional payment will be made for lack of contractor coordination of electrical characteristics.

17. All mechanical and electrical system components shall be routed tight to underside of structure and through joists or trusses where possible. Coordinate installation to preserve headroom, equipment access, and architectural clearances for finishes, including ceiling heights. Coordinate with all other trades and do not conflict with the architectural requirements for the finished construction. Provide offsets where required to coordinate with other trades.

18. Refer to architectural reflected ceiling plans for locations of all grilled and diffusers.

19. All equipment and materials shall be new, free of defects and U.L. listed/labeled.

20. All cutting and chasing of the building construction required for this work shall be by this contractor unless shown on architectural drawings and confirmed as to size and location prior to new construction. Cutting shall be in a neat and workmanlike manner.

21. Exact location of rooftop mechanical units shall be approved by the structural engineer of record. Mechanical contractor shall furnish and install all supplemental support steel for units and roof duct penetrations after approval of structural engineer of record.

22. Fabricate and erect all ductwork to ASHRAE and SMACNA standards from #1 galvanized steel.

23. All ductwork in areas without ceilings that is to be painted shall be provided with paint grip finish. Comply with SMACNA standards and NFPA bulletin 90A requirements.

24. Ductwork shall be SMACNA low pressure construction 2" static pressure rating with Seal Class B seams and joints.

25. Flexible ducts shall be independently supported from the structure and connected with plastic drawbands tightened with manufacturer's tool. Flexible ducts are not permitted in rooms without ceilings. Flexible ducts shall be ATCO rubber type 070, 1 ½" insulation and rated at 10" W.C. for sizes through 12", UL listed, and meet 25/50 flame and smoke test. No interior color other than black is permitted for flexible ducts. Equivalent by Valuflex, Flexaire, Flexible Technologies, Thermaflex, or Genflex.

26. Include all turning veins, manual dampers, flexible connectors, grills and diffusers, acoustic lining, and other sheet metal accessories for the project. Volume dampers to be of opposed blade construction with locking quadrants. Provide volume dampers at supply air runouts to all ceiling diffusers.

27. All branch connection fittings in rectangular ductwork shall be 45 AVPree transition type, conical fittings, or spin-in fittings with integral air scoops. Butt fittings are not acceptable.

28. Acoustic line all rectangular ducts indicated on drawings with minimum 1" thick non-flaking, coated medium density liner. Apply to manufacturer's recommendations. Duct dimensions are outside dimensions, and include acoustic lining.

29. Provide curbs for all roof openings for ducts, flues, piping, and equipment. Curbs shall be furnished as accessories to the equipment or 8" high plate or equal equipment supports spanning structure and flashed into roofing. Roof curbs shall be compatible with roofing system and shall match roof flashing, and patching of roof shall be by a certified roofing contractor approved by the owner/tenant and paid for by the mechanical contractor.

30. All rigid round ductwork to be internally insulated.

31. From each air conditioning unit, install 4" deep trapped condensate drain with cleanout and terminate as shown on plans.

32. HVAC contractor to furnish all HVAC equipment indicated and/or scheduled on the drawings complete with bases, insulators, supports, and other required accessories.

33. Completely install equipment and place in proper operation per manufacturer's recommendations, lubricate and adjust as required. Furnish and install clean set of filters prior to balancing.

34. Equipment to be make and model as scheduled unless owner approved, equivalent quality and performance equipment is submitted as substitution. All substitutions subject to acceptance without qualification by owner/tenant and design engineer.

35. Furnish and install all controls for HVAC systems. Provide all relays and devices required for complete operation. Mount all controls furnished as accessories to equipment and provide all control wiring or power wiring required for control system where not specifically shown on electrical plans. All exposed wiring shall be in EMT conduit per CEC. Concealed wiring in ceiling plenums may be UL listed plenum rated cable neatly supported in wirings.

36. No thermostat shall be installed above any heat producing equipment.

37. Supports and hangers are to be provided to properly support, secure and align ductwork and to meet conditions. Provide seismic bracing for hangers and supports supporting ductwork. Comply with the latest edition of the Sheet Metal and Air Conditioning Contractors National Association Inc. (SMACNA) Seismic Restraint Manual as approved by ANSI.

38. At ducts to equipment, provide waterproof vent fabric flexible connections with a minimum of 6" full length, and approved by the AHJ. Where exposed to the outside, provide sun shield over the flexible connection.

39. Each rooftop AC unit and outdoor unit shall be mounted on freestanding spring type isolators with seismic restraints for lateral and vertical motion. Mounting shall be hot dipped galvanized.

40. Refrigerant piping to be Type "L" copper with brazed fittings using silver solder installed per the manufacturer's instructions for R-22 service. Piping shall be insulated with 1" thick insulation with all joints sealed with adhesive. Factory precharged piping may be used where length of run does not exceed 75'. Where insulation is exposed to weather it shall be covered with a jacket or protective/weather resistive paint which is a minimum of .016" thick.

41. Provide hangers and supports as required, straps and/or wire is unacceptable.

42. Coordinate work of this section with work of other sections to avoid conflicts. If required, provide shop drawings and submit to design engineer for approval.

43. Ensure that work of other sections is suitable to accommodate work of this section.

44. HVAC systems rated at 2000 cfm or greater shall be equipped with a duct smoke detector to automatically shut off the HVAC system if smoke is detected. The detectors shall be installed in the main supply duct downstream of any filters.

45. Condensate from cooling coils and overflow of evaporative coolers shall be collected and discharged to an approved plumbing fixture or disposal area. CMC Sec. 310.1.

46. Duct systems used with blower type equipment which are portions of a heating, cooling, absorption, evaporative cooling or outdoor air ventilation system shall be sized in accordance with Chapter 17 of the 2019 CMC.

THESE DRAWINGS AND SPECIFICATIONS ARE THE PROPERTY AND COPYRIGHT OF LAUTERBACH & ASSOCIATES. ALL RIGHTS RESERVED, AND SHALL NOT BE USED ON ANY OTHER WORK OR PROJECT EXCEPT BY WRITTEN AGREEMENT WITH LAUTERBACH & ASSOCIATES. WRITTEN DIMENSIONS SHALL TAKE PRECEDENCE OVER SCALED DIMENSIONS AND SHALL BE VERIFIED ON THE JOB SITE. ANY DISCREPANCY SHALL BE BROUGHT TO THE NOTICE OF LAUTERBACH & ASSOCIATES PRIOR TO COMMENCEMENT OF ANY WORK.

LAUTERBACH & ASSOCIATES
ARCHITECTS INC.
David C. Kesterson, Architect • Ilona Scott, Architect • Mark S. Pettit, Architect
300 MONTGOMERY AVENUE, OXNARD, CALIFORNIA 93036 | 805-988-0912 | FAX 805-981-4510 | www.la-arch.com

REGISTERED PROFESSIONAL ENGINEER SHANE DENNIS WINTER No. M34632 MECHANICAL STATE OF CALIFORNIA

REGISTERED PROFESSIONAL ENGINEER SHANE DENNIS WINTER No. C70691 CIVIL STATE OF CALIFORNIA

FASHION PARK APARTMENTS

234, 251 & 257 FASHION PARK
OXNARD, CA, 93036

CITY OF OXNARD HOUSING AUTHORITY

435 S. D STREET
OXNARD, CALIFORNIA 93030

NO	DESCRIPTION	DATE
1	SUBMIT	4/8/2020

ISSUE

JOB NO. 20-190709

DRAWN BY:
CHECKED BY:
PROJECT MANAGER:
PRINT DATE: 4/06/2020 8:36:51 AM

HVAC NOTES/ DETAILS

M-0.0

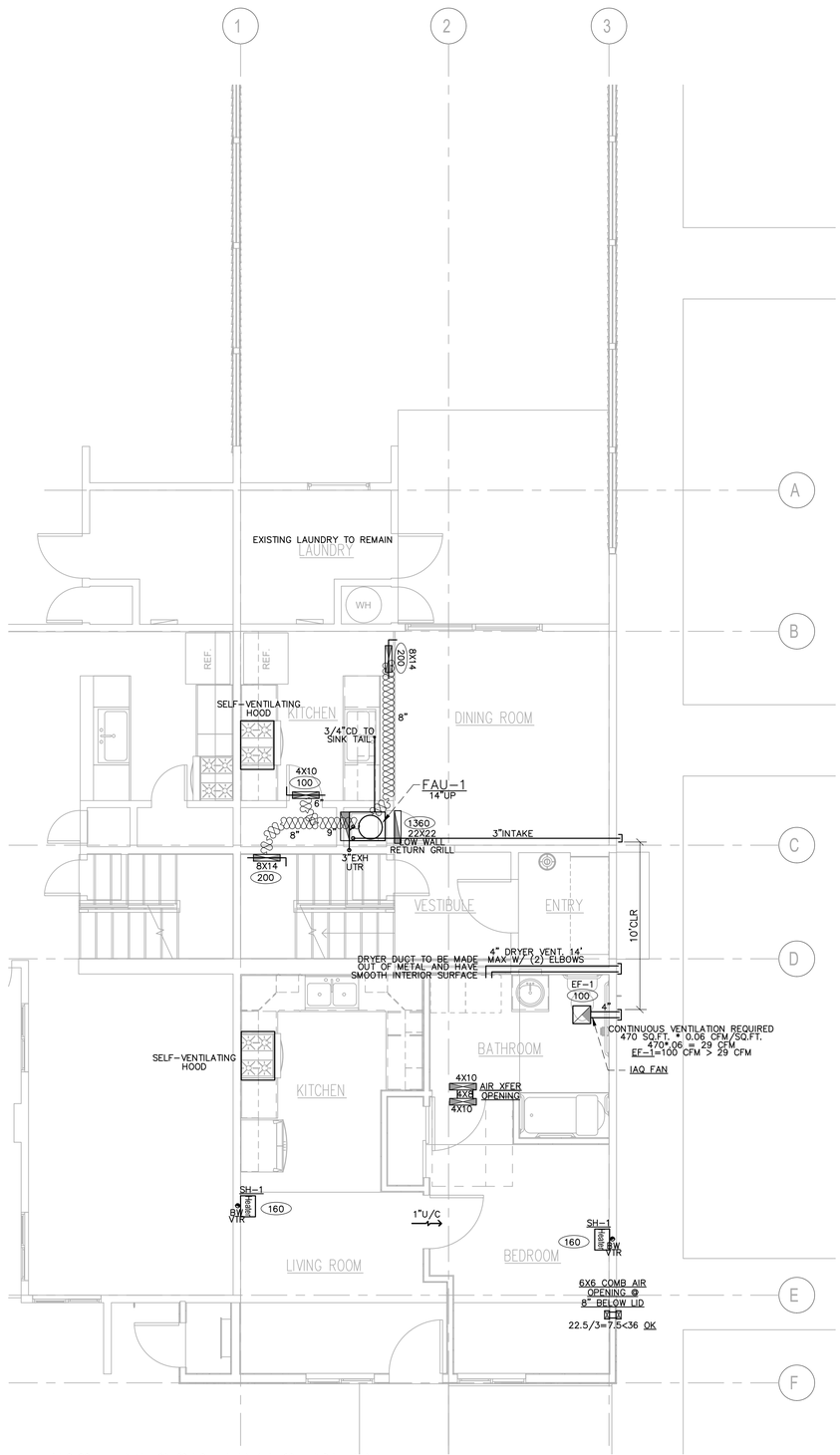

FIRST FLOOR HVAC PLAN

SCALE: 1/4":12"

HVAC LEGEND

- EXHAUST FAN – SEE SCHEDULE
- ##"X##" SUPPLY AIR REGISTER
- ##"X##" RETURN AIR REGISTER
- ### DESIGN CFM
- SD DUCT SMOKE DETECTOR
- VOLUME DAMPER
- POINT OF CONNECTION (VIF)
- ## 26 GA FLEXIBLE DUCT/DIAMETER PROVIDE R-6 INSULATION
- ## 26 GA EXPOSED RIGID DUCT/DIAMETER
- T DDC THERMOSTAT – WSHP#
- ## XXXXX DUCT ROUTING INSTRUCTION
- SHUT OFF VALVE

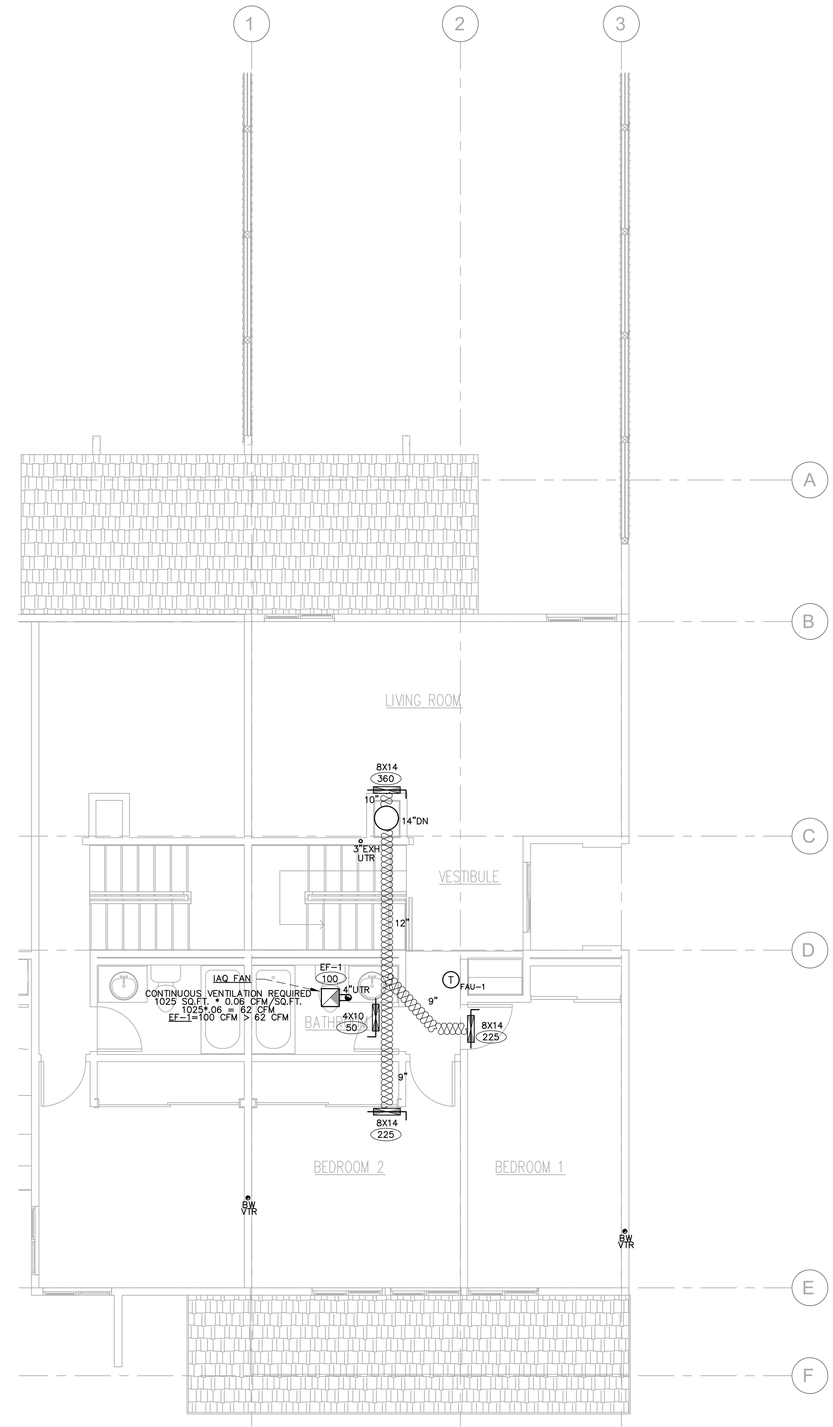

SECOND FLOOR HVAC PLAN

SCALE: 1/4":12"

THESE DRAWINGS AND SPECIFICATIONS ARE THE PROPERTY AND COPYRIGHT OF LAUTERBACH & ASSOCIATES. ALL RIGHTS RESERVED, AND SHALL NOT BE USED ON ANY OTHER WORK OR PROJECT EXCEPT BY WRITTEN AGREEMENT WITH LAUTERBACH & ASSOCIATES. WRITTEN DIMENSIONS SHALL TAKE PRECEDENCE OVER SCALED DIMENSIONS AND SHALL BE VERIFIED ON THE JOB SITE. ANY DISCREPANCY SHALL BE BROUGHT TO THE NOTICE OF LAUTERBACH & ASSOCIATES PRIOR TO COMMENCEMENT OF ANY WORK.

LAUTERBACH & ASSOCIATES
ARCHITECTS INC.
David C. Kesterson, Architect • Ilona Scott, Architect • Mark S. Pettit, Architect
300 MONTGOMERY AVENUE, OXNARD, CALIFORNIA 93036 | 805-988-0912 | FAX 805-981-4510 | www.la-arch.com

REGISTERED PROFESSIONAL ENGINEER SHANE DENNIS No. M24632 MECHANICAL STATE OF CALIFORNIA

REGISTERED PROFESSIONAL ENGINEER SHANE DENNIS No. C70891 CIVIL STATE OF CALIFORNIA

FASHION PARK APARTMENTS

234, 251 & 257 FASHION PARK
OXNARD, CA, 93036

CITY OF OXNARD HOUSING AUTHORITY

435 S. D STREET
OXNARD, CALIFORNIA 93030

NO	DESCRIPTION	DATE
1	SUBMIT	4/8/2020

ISSUE

JOB NO. 20-190209

DRAWN BY:
CHECKED BY:
PROJECT MANAGER:
PRINT DATE: 2/15/19 8:36:51 AM

HVAC PLAN

M-1.0

CERTIFICATE OF COMPLIANCE **CF1R-PRF-01E**

Project Name: 1-BR Apartment **Calculation Date/Time:** 2020-02-18T14:51:54-08:00 **(Page 1 of 8)**

Calculation Description: Title 24 Analysis **Input File Name:** 20-012 - FASHION PARK APARTMENTS - LAUTERBACH (1 Bedroom).ribd19x

GENERAL INFORMATION					
01	Project Name	1-BR Apartment			
02	Run Title	Title 24 Analysis			
03	Project Location	234 Fashion Park Place			
04	City	Oxnard	05	Standards Version	2019
06	Zip code	93033	07	Software Version	EnergyPro 8.0
08	Climate Zone	6	09	Front Orientation (deg/ Cardinal)	180
10	Building Type	SingleFamily	11	Number of Dwelling Units	1
12	Project Scope	AdditionAlteration	13	Number of Bedrooms	1
14	New Cond. Floor Area (ft^2)	0	15	Number of Stories	1
16	Existing Cond. Floor Area (ft^2)	472	17	Fenestration Average U-factor	0.3
18	Total Cond. Floor Area (ft^2)	472	19	Glazing Percentage (%)	10.17%
20	ADU Bedroom Count	0	21	ADU Conditioned Floor Area	0

COMPLIANCE RESULTS	
01	Building Complies with Computer Performance
02	This building incorporates features that require field testing and/or verification by a certified HERS rater under the supervision of a CEC-approved HERS provider.
03	This building incorporates one or more Special Features shown below

ENERGY USE SUMMARY				
Energy Use (kTDV/ft^2-yr)	Standard Design	Proposed Design	Compliance Margin	Percent Improvement
Space Heating	8.16	4.68	3.48	42.6
Space Cooling	11.65	11.47	0.18	1.5
IAQ Ventilation	0	0	0	
Water Heating	37.71	38.03	-0.32	-0.8
Self Utilization Credit	n/a	0	0	n/a
Compliance Energy Total	**57.52**	**54.18**	**3.34**	**5.8**

Registration Number: 420-P010019355A-000-000-0000000-0000 Registration Date/Time: 02/18/2020 14:53 HERS Provider: Cal Energy

CA Building Energy Efficiency Standards - 2019 Residential Compliance Report Version: 2019.1.100 Schema Version: rev 20190401 Report Generated: 2020-02-18 14:52:11

CERTIFICATE OF COMPLIANCE **CF1R-PRF-01E**

Project Name: 1-BR Apartment **Calculation Date/Time:** 2020-02-18T14:51:54-08:00 **(Page 2 of 8)**

Calculation Description: Title 24 Analysis **Input File Name:** 20-012 - FASHION PARK APARTMENTS - LAUTERBACH (1 Bedroom).ribd19x

REQUIRED SPECIAL FEATURES
The following are features that must be installed as condition for meeting the modeled energy performance for this computer analysis.
• New ductwork added is less than 40 ft. in length
• Non-standard duct location (any location other than attic)

HERS FEATURE SUMMARY
The following is a summary of the features that must be field-verified by a certified HERS Rater as a condition for meeting the modeled energy performance for this computer analysis. Additional detail is provided in the building tables below. Registered CF2Rs and CF3Rs are required to be completed in the HERS Registry
Building-level Verifications: • Kitchen range hood Cooling System Verifications: • Verified EER • Verified SEER Heating System Verifications: • -- None -- HVAC Distribution System Verifications: • Duct Sealing required if a duct system component, plenum, or air handling unit is altered Domestic Hot Water System Verifications: • -- None --

BUILDING - FEATURES INFORMATION						
01	02	03	04	05	06	07
Project Name	Conditioned Floor Area (ft^2)	Number of Dwelling Units	Number of Bedrooms	Number of Zones	Number of Ventilation Cooling Systems	Number of Water Heating Systems
1-BR Apartment	472	1	1	1	0	1

ZONE INFORMATION						
01	02	03	04	05	06	07
Zone Name	Zone Type	HVAC System Name	Zone Floor Area (ft^2)	Avg. Ceiling Height	Water Heating System 1	Water Heating System 2
1 Bedroom Apartment	Conditioned	HVAC System1	472	9	DHW Sys 1	N/A

Registration Number: 420-P010019355A-000-000-0000000-0000 Registration Date/Time: 02/18/2020 14:53 HERS Provider: Cal Energy

CA Building Energy Efficiency Standards - 2019 Residential Compliance Report Version: 2019.1.100 Schema Version: rev 20190401 Report Generated: 2020-02-18 14:52:11

CERTIFICATE OF COMPLIANCE **CF1R-PRF-01E**

Project Name: 1-BR Apartment **Calculation Date/Time:** 2020-02-18T14:51:54-08:00 **(Page 3 of 8)**

Calculation Description: Title 24 Analysis **Input File Name:** 20-012 - FASHION PARK APARTMENTS - LAUTERBACH (1 Bedroom).ribd19x

OPAQUE SURFACES										
01	02	03	04	05	06	07	08	09	10	11
Name	Zone	Construction	Azimuth	Orientation	Gross Area (ft^2)	Window and Door Area (ft2)	Tilt (deg)	Status	Verified Existing Condition	Existing Construction
Front Wall	1 Bedroom Apartment	R-15 Wall	180	Front	193.5	68	90	New	n/a	
Left Wall	1 Bedroom Apartment	R-15 Wall	270	Left	216	0	90	Existing	No	
Rear Wall	1 Bedroom Apartment	R-15 Wall	0	Back	193.5	0	90	Existing	No	
Right Wall	1 Bedroom Apartment	R-15 Wall	90	Right	216	0	90	Existing	No	
Raised Floor	1 Bedroom Apartment	R-19 Floor No Crawlspace	n/a	n/a	100	n/a	n/a	New	n/a	
Raised Floor 2	1 Bedroom Apartment	R-19 Floor No Crawlspace	n/a	n/a	372	n/a	n/a	New	n/a	

FENESTRATION / GLAZING																
01	02	03	04	05	06	07	08	09	10	11	12	13	14	15	16
Name	Type	Surface	Orientation	Azimuth	Width (ft)	Height (ft)	Mult.	Area (ft^2)	U-factor	U-factor Source	SHGC	SHGC Source	Exterior Shading	Status	Verified Existing Condition
Window	Window	Front Wall	Front	180			1	24	0.3	NFRC	0.23	NFRC	Bug Screen	New	n/a
Window 2	Window	Front Wall	Front	180			1	24	0.3	NFRC	0.23	NFRC	Bug Screen	New	n/a

OPAQUE DOORS					
01	02	03	04	05	06
Name	Side of Building	Area (ft^2)	U-factor	Status	Verified Existing Condition
Door	Front Wall	20	0.2	New	n/a

Registration Number: 420-P010019355A-000-000-0000000-0000 Registration Date/Time: 02/18/2020 14:53 HERS Provider: Cal Energy

CA Building Energy Efficiency Standards - 2019 Residential Compliance Report Version: 2019.1.100 Schema Version: rev 20190401 Report Generated: 2020-02-18 14:52:11

CERTIFICATE OF COMPLIANCE **CF1R-PRF-01E**

Project Name: 1-BR Apartment **Calculation Date/Time:** 2020-02-18T14:51:54-08:00 **(Page 4 of 8)**

Calculation Description: Title 24 Analysis **Input File Name:** 20-012 - FASHION PARK APARTMENTS - LAUTERBACH (1 Bedroom).ribd19x

SLAB FLOORS								
01	02	03	04	05	06	07	08	09
Name	Zone	Area (ft2)	Perimeter (ft)	Edge Insul. R-value and Depth	Carpeted Fraction	Heated	Status	Verified Existing Condition
Slab	1 Bedroom Apartment	372	91	None	80%	No	Existing	No
Slab 2	1 Bedroom Apartment	100	91	None	80%	No	New	n/a

OPAQUE SURFACE CONSTRUCTIONS							
01	02	03	04	05	06	07	08
Construction Name	Surface Type	Construction Type	Framing	Total Cavity R-value	Interior / Exterior Continuous R-value	U-factor	Assembly Layers
R-15 Wall	Exterior Walls	Wood Framed Wall	2x4 @ 16 in. O.C.	R-15	None / None	0.095	Inside Finish: Gypsum Board Cavity / Frame: R-15 / 2x4 Exterior Finish: 3 Coat Stucco
R-19 Floor No Crawlspace	Exterior Floors	Wood Framed Floor	2x10 @ 16 in. O.C.	R-19	None / None	0.047	Floor Surface: Carpeted Floor Deck: Wood Siding/sheathing/decking Cavity / Frame: R-19 / 2x10

BUILDING ENVELOPE - HERS VERIFICATION			
01	02	03	04
Quality Insulation Installation (QII)	Quality Installation of Spray Foam Insulation	Building Envelope Air Leakage	CFM50
Not Required	Not Required	Not Required	n/a

Registration Number: 420-P010019355A-000-000-0000000-0000 Registration Date/Time: 02/18/2020 14:53 HERS Provider: Cal Energy

CA Building Energy Efficiency Standards - 2019 Residential Compliance Report Version: 2019.1.100 Schema Version: rev 20190401 Report Generated: 2020-02-18 14:52:11

CERTIFICATE OF COMPLIANCE **CF1R-PRF-01E**

Project Name: 1-BR Apartment **Calculation Date/Time:** 2020-02-18T14:51:54-08:00 **(Page 5 of 8)**

Calculation Description: Title 24 Analysis **Input File Name:** 20-012 - FASHION PARK APARTMENTS - LAUTERBACH (1 Bedroom).ribd19x

WATER HEATING SYSTEMS									
01	02	03	04	05	06	07	08	09	10
Name	System Type	Distribution Type	Water Heater Name (#)	Solar Fraction (%)	Compact Distribution	HERS Verification	Status	Verified Existing Condition	Existing Water Heating System
DHW Sys 1	Domestic Hot Water (DHW)	Standard Distribution System	DHW Heater 1 (1)	0	None	n/a	New	NA	

WATER HEATERS														
01	02	03	04	05	06	07	08	09	10	11	12	13	14
Name	Heating Element Type	Tank Type	# Units	Tank Vol. (gal)	Energy Factor or Efficiency	Input Rating or Pilot	Tank Insulation R-value (Int/Ext)	Standby Loss or Recovery Eff.	1st Hr. Rating or Flow Rate	NEEA Heat Pump Brand or Model / Other	Tank Location or Ambient Condition	Status	Verified Existing Condition
DHW Heater 1	Natural Gas	Consumer Instantaneous	1	0	0.81-UEF	200000 Btu/Hr	0	n/a	n/a	n/a	n/a	New	

WATER HEATING - HERS VERIFICATION							
01	02	03	04	05	06	07	08
Name	Pipe Insulation	Parallel Piping	Compact Distribution	Compact Distribution Type	Recirculation Control	Central DHW Distribution	Shower Drain Water Heat Recovery
DHW Sys 1 - 1/1	Not Required	Not Required	Not Required	None	Not Required	Not Required	Not Required

Registration Number: 420-P010019355A-000-000-0000000-0000 Registration Date/Time: 02/18/2020 14:53 HERS Provider: Cal Energy

CA Building Energy Efficiency Standards - 2019 Residential Compliance Report Version: 2019.1.100 Schema Version: rev 20190401 Report Generated: 2020-02-18 14:52:11

CERTIFICATE OF COMPLIANCE **CF1R-PRF-01E**

Project Name: 1-BR Apartment **Calculation Date/Time:** 2020-02-18T14:51:54-08:00 **(Page 6 of 8)**

Calculation Description: Title 24 Analysis **Input File Name:** 20-012 - FASHION PARK APARTMENTS - LAUTERBACH (1 Bedroom).ribd19x

SPACE CONDITIONING SYSTEMS											
01	02	03	04	05	06	07	08	09	10	11	12
Name	System Type	Heating Unit Name	Cooling Unit Name	Fan Name	Distribution Name	Required Thermostat Type	Heating Equipment Count	Cooling Equipment Count	Status	Verified Existing Condition	Existing HVAC System
HVAC System1	Heating and cooling system other	Heating Component 1	Cooling Component 1	HVAC Fan 1	Air Distribution System 1	Setback	1	1	New	No	n/a

HVAC - HEATING UNIT TYPES				
01	02	03	04	05
Name	System Type	Number of Units	Heating Efficiency Type	Efficiency
Heating Component 1	Gas wall furnace	1	AFUE	96

HVAC - COOLING UNIT TYPES							
01	02	03	04	05	06	07	08
Name	System Type	Number of Units	Efficiency EER	Efficiency SEER	Zonally Controlled	Mulit-speed Compressor	HERS Verification
Cooling Component 1	Central split AC	1	12.5	15	Not Zonal	Single Speed	Cooling Component 1-hers-cool

HVAC COOLING - HERS VERIFICATION					
01	02	03	04	05	06
Name	Verified Airflow	Airflow Target	Verified EER	Verified SEER	Verified Refrigerant Charge
Cooling Component 1-hers-cool	Not Required	0	Required	Required	Not Required

Registration Number: 420-P010019355A-000-000-0000000-0000 Registration Date/Time: 02/18/2020 14:53 HERS Provider: Cal Energy

CA Building Energy Efficiency Standards - 2019 Residential Compliance Report Version: 2019.1.100 Schema Version: rev 20190401 Report Generated: 2020-02-18 14:52:11

CERTIFICATE OF COMPLIANCE **CF1R-PRF-01E**

Project Name: 1-BR Apartment **Calculation Date/Time:** 2020-02-18T14:51:54-08:00 **(Page 7 of 8)**

Calculation Description: Title 24 Analysis **Input File Name:** 20-012 - FASHION PARK APARTMENTS - LAUTERBACH (1 Bedroom).ribd19x

HVAC - DISTRIBUTION SYSTEMS															
01	02	03	04	05	06	07	08	09	10	11	12	13	14	15	16
			Duct Ins. R-value		Duct Location		Surface Area								
Name	Type	Design Type	Supply	Return	Supply	Return	Supply	Return	Bypass Duct	Duct Leakage	HERS Verification	Status	Verified Existing Condition	Existing Distribution system	New Ducts 40 ft
Air Distribution System 1	Conditioned space-entirely	Non-Verified	R-6	R-6	Conditioned Zone	Conditioned Zone	n/a	n/a	No Bypass Duct	Existing (not specified)	Air Distribution System 1-hers-dist	Existing + New	No	n/a	n/a

HVAC - FAN SYSTEMS			
01	02	03	04
Name	Type	Fan Power (Watts/CFM)	Name
HVAC Fan 1	HVAC Fan	0.58	HVAC Fan 1-hers-fan

HVAC FAN SYSTEMS - HERS VERIFICATION		
01	02	03
Name	Verified Fan Watt Draw	Required Fan Efficiency (Watts/CFM)
HVAC Fan 1-hers-fan	Not Required	0

Registration Number: 420-P010019355A-000-000-0000000-0000 Registration Date/Time: 02/18/2020 14:53 HERS Provider: Cal Energy

CA Building Energy Efficiency Standards - 2019 Residential Compliance Report Version: 2019.1.100 Schema Version: rev 20190401 Report Generated: 2020-02-18 14:52:11

CERTIFICATE OF COMPLIANCE **CF1R-PRF-01E**

Project Name: 1-BR Apartment **Calculation Date/Time:** 2020-02-18T14:51:54-08:00 **(Page 8 of 8)**

Calculation Description: Title 24 Analysis **Input File Name:** 20-012 - FASHION PARK APARTMENTS - LAUTERBACH (1 Bedroom).ribd19x

DOCUMENTATION AUTHOR'S DECLARATION STATEMENT	
I. I certify that this Certificate of Compliance documentation is accurate and complete.	
Documentation Author Name: Shane Judd	Documentation Author Signature: Shane Judd
Company: All-Trade Engineering	Signature Date: 02/18/2020
Address: 17 E High St.	CEA/ HERS Certification Identification (If applicable):
City/State/Zip: Moorpark, CA 93021	Phone: (805) 552-4000

RESPONSIBLE PERSON'S DECLARATION STATEMENT	
I certify the following under penalty of perjury, under the laws of the State of California: 1. I am eligible under Division 3 of the Business and Professions Code to accept responsibility for the building design identified on this Certificate of Compliance. 2. I certify that the energy features and performance specifications identified on this Certificate of Compliance conform to the requirements of Title 24, Part 1 and Part 6 of the California Code of Regulations. 3. The building design features or system design features identified on this Certificate of Compliance are consistent with the information provided on other applicable compliance documents, worksheets, calculations, plans and specifications submitted to the enforcement agency for approval with this building permit application.	
Responsible Designer Name: Shane Judd	Responsible Designer Signature: Shane Judd
Company: All-Trade Engineering	Date Signed: 02/18/2020
Address: 17 E High St.	License: C70991
City/State/Zip: Moorpark, CA 93021	Phone: (805) 552-4000

NOTICE: This certificate has been generated by California Energy Registry, Inc. ("Cal Energy") using information uploaded by third parties not affiliated or related to Cal Energy. Therefore, Cal Energy is not responsible for, and cannot guarantee,

Registration Number: 420-P010019355A-000-000-0000000-0000 Registration Date/Time: 02/18/2020 14:53 HERS Provider: Cal Energy

CA Building Energy Efficiency Standards - 2019 Residential Compliance Report Version: 2019.1.100 Schema Version: rev 20190401 Report Generated: 2020-02-18 14:52:11

THESE DRAWINGS AND SPECIFICATIONS ARE THE PROPERTY AND COPYRIGHT OF LAUTERBACH & ASSOCIATES, ALL RIGHTS RESERVED, AND SHALL NOT BE USED ON ANY OTHER WORK OR PROJECT EXCEPT BY WRITTEN AGREEMENT WITH LAUTERBACH & ASSOCIATES. WRITTEN DIMENSIONS SHALL TAKE PRECEDENCE OVER SCALED DIMENSIONS AND SHALL BE VERIFIED ON THE JOB SITE. ANY DISCREPANCY SHALL BE BROUGHT TO THE NOTICE OF LAUTERBACH & ASSOCIATES PRIOR TO COMMENCEMENT OF ANY WORK.

LAUTERBACH & ASSOCIATES
ARCHITECTS INC.
David C. Kesterson, Architect • Ilona Scott, Architect • Mark S. Pettit, Architect
300 MONTGOMERY AVENUE, OXNARD, CALIFORNIA 93030 | 805-988-0912 | FAX 805-981-4510 | www.la-arch.com

REGISTERED PROFESSIONAL ENGINEER SHANE DENNIS JUDD No. M34632 MECHANICAL STATE OF CALIFORNIA

REGISTERED PROFESSIONAL ENGINEER SHANE DENNIS JUDD No. C70991 CIVIL STATE OF CALIFORNIA

FASHION PARK APARTMENTS

234, 251 & 257 FASHION PARK
OXNARD, CA, 93036

CITY OF OXNARD HOUSING AUTHORITY

435 S. D STREET
OXNARD, CALIFORNIA 93030

NO	DESCRIPTION	DATE
1	SUBMIT	4/8/2020

ISSUE

JOB NO. 20-190209

DRAWN BY:
CHECKED BY:
PROJECT MANAGER:
PRINT DATE: 2/15/19 8:36:51 AM

TITLE 24 CALCS

N-1

CERTIFICATE OF COMPLIANCE **CF1R-PRF-01E**

Project Name: 2-BR Apartment **Calculation Date/Time:** 2020-02-18T13:59:47-08:00 **(Page 1 of 9)**

Calculation Description: Title 24 Analysis **Input File Name:** 20-012 - FASHION PARK APARTMENTS - LAUTERBACH.ribd19x

GENERAL INFORMATION					
01	Project Name	2-BR Apartment			
02	Run Title	Title 24 Analysis			
03	Project Location	234 Fashion Park Place			
04	City	Oxnard	05	Standards Version	2019
06	Zip code	93033	07	Software Version	EnergyPro 8.0
08	Climate Zone	6	09	Front Orientation (deg/ Cardinal)	180
10	Building Type	SingleFamily	11	Number of Dwelling Units	1
12	Project Scope	AdditionAlteration	13	Number of Bedrooms	1
14	New Cond. Floor Area (ft^2)	0	15	Number of Stories	1
16	Existing Cond. Floor Area (ft^2)	1018	17	Fenestration Average U-factor	0.3
18	Total Cond. Floor Area (ft^2)	1018	19	Glazing Percentage (%)	15.23%
20	ADU Bedroom Count	0	21	ADU Conditioned Floor Area	0

COMPLIANCE RESULTS	
01	Building Complies with Computer Performance
02	This building incorporates features that require field testing and/or verification by a certified HERS rater under the supervision of a CEC-approved HERS provider.
03	This building incorporates one or more Special Features shown below

ENERGY USE SUMMARY

Energy Use (kTDV/ft^2-yr)	Standard Design	Proposed Design	Compliance Margin	Percent Improvement
Space Heating	18.81	15.16	3.65	19.4
Space Cooling	4.52	3.85	0.67	14.8
IAQ Ventilation	0	0	0	
Water Heating	26.04	26.04	0	0
Self Utilization Credit	n/a	0	0	n/a
Compliance Energy Total	**49.37**	**45.05**	**4.32**	**8.8**

CERTIFICATE OF COMPLIANCE **CF1R-PRF-01E**

Project Name: 2-BR Apartment **Calculation Date/Time:** 2020-02-18T13:59:47-08:00 **(Page 2 of 9)**

Calculation Description: Title 24 Analysis **Input File Name:** 20-012 - FASHION PARK APARTMENTS - LAUTERBACH.ribd19x

REQUIRED SPECIAL FEATURES

The following are features that must be installed as condition for meeting the modeled energy performance for this computer analysis.

- New ductwork added is less than 40 ft. in length
- Non-standard duct location (any location other than attic)

HERS FEATURE SUMMARY

The following is a summary of the features that must be field-verified by a certified HERS Rater as a condition for meeting the modeled energy performance for this computer analysis. Additional detail is provided in the building tables below. Registered CF2Rs and CF3Rs are required to be completed in the HERS Registry

Building-level Verifications:
- Kitchen range hood

Cooling System Verifications:
- Verified EER
- Verified SEER

Heating System Verifications:
- -- None --

HVAC Distribution System Verifications:
- Duct Sealing required if a duct system component, plenum, or air handling unit is altered

Domestic Hot Water System Verifications:
- -- None --

BUILDING - FEATURES INFORMATION

01	02	03	04	05	06	07
Project Name	Conditioned Floor Area (ft^2)	Number of Dwelling Units	Number of Bedrooms	Number of Zones	Number of Ventilation Cooling Systems	Number of Water Heating Systems
2-BR Apartment	1018	1	1	1	0	1

ZONE INFORMATION

01	02	03	04	05	06	07
Zone Name	Zone Type	HVAC System Name	Zone Floor Area (ft^2)	Avg. Ceiling Height	Water Heating System 1	Water Heating System 2
2 Bedroom Apartment	Conditioned	HVAC System1	1018	9	DHW Sys 1	N/A

CERTIFICATE OF COMPLIANCE **CF1R-PRF-01E**

Project Name: 2-BR Apartment **Calculation Date/Time:** 2020-02-18T13:59:47-08:00 **(Page 3 of 9)**

Calculation Description: Title 24 Analysis **Input File Name:** 20-012 - FASHION PARK APARTMENTS - LAUTERBACH.ribd19x

OPAQUE SURFACES

01	02	03	04	05	06	07	08	09	10	11
Name	Zone	Construction	Azimuth	Orientation	Gross Area (ft^2)	Window and Door Area (ft2)	Tilt (deg)	Status	Verified Existing Condition	Existing Construction
Front Wall	2 Bedroom Apartment	R-15 Wall	180	Front	193.5	0	90	Existing	No	
Left Wall	2 Bedroom Apartment	R-15 Wall	270	Left	171	0	90	Existing	No	
Rear Wall	2 Bedroom Apartment	R-15 Wall	0	Back	193.5	51	90	Existing	No	
Right Wall	2 Bedroom Apartment	R-15 Wall	90	Right	171	20	90	Existing	No	
Front Wall 2	2 Bedroom Apartment	R-15 Wall	180	Front	193.5	48	90	Existing	No	
Left Wall 2	2 Bedroom Apartment	R-15 Wall	270	Left	342	0	90	Existing	No	
Rear Wall 2	2 Bedroom Apartment	R-15 Wall	0	Back	193.5	32	90	Existing	No	
Right Wall 2	2 Bedroom Apartment	R-15 Wall	90	Right	342	24	90	Existing	No	
Roof	2 Bedroom Apartment	R-30 Roof Attic	n/a	n/a	642	n/a	n/a	Existing	No	
Raised Floor	2 Bedroom Apartment	R-19 Floor No Crawlspace	n/a	n/a	1018	n/a	n/a	Existing	No	

ATTIC

01	02	03	04	05	06	07	08	09	10
Name	Construction	Type	Roof Rise (x in 12)	Roof Reflectance	Roof Emittance	Radiant Barrier	Cool Roof	Status	Verified Existing Condition
Attic 2 Bedroom Apartment	Attic Roof2 Bedroom Apartment	Ventilated	0	0.1	0.85	Yes	No	Existing	No

CERTIFICATE OF COMPLIANCE **CF1R-PRF-01E**

Project Name: 2-BR Apartment **Calculation Date/Time:** 2020-02-18T13:59:47-08:00 **(Page 4 of 9)**

Calculation Description: Title 24 Analysis **Input File Name:** 20-012 - FASHION PARK APARTMENTS - LAUTERBACH.ribd19x

FENESTRATION / GLAZING

01	02	03	04	05	06	07	08	09	10	11	12	13	14	15	16
Name	Type	Surface	Orientation	Azimuth	Width (ft)	Height (ft)	Mult.	Area (ft^2)	U-factor	U-factor Source	SHGC	SHGC Source	Exterior Shading	Status	Verified Existing Condition
Slider	Window	Rear Wall	Back	0			1	51	0.3	NFRC	0.23	NFRC	Bug Screen	Existing	No
Window	Window	Front Wall 2	Front	180			1	16	0.3	NFRC	0.23	NFRC	Bug Screen	New	n/a
Window 2	Window	Front Wall 2	Front	180			1	16	0.3	NFRC	0.23	NFRC	Bug Screen	New	n/a
Window 3	Window	Front Wall 2	Front	180			1	16	0.3	NFRC	0.23	NFRC	Bug Screen	New	n/a
Window 4	Window	Rear Wall 2	Back	0			1	16	0.3	NFRC	0.23	NFRC	Bug Screen	New	n/a
Window 5	Window	Rear Wall 2	Back	0			1	16	0.3	NFRC	0.23	NFRC	Bug Screen	New	n/a
Window 6	Window	Right Wall 2	Right	90			1	24	0.3	NFRC	0.23	NFRC	Bug Screen	New	n/a

OPAQUE DOORS

01	02	03	04	05	06
Name	Side of Building	Area (ft^2)	U-factor	Status	Verified Existing Condition
Door	Right Wall	20	0.2	Existing	No

SLAB FLOORS

01	02	03	04	05	06	07	08	09
Name	Zone	Area (ft2)	Perimeter (ft)	Edge Insul. R-value and Depth	Carpeted Fraction	Heated	Status	Verified Existing Condition
Slab	2 Bedroom Apartment	1018	91	None	80%	No	Existing	No

CERTIFICATE OF COMPLIANCE **CF1R-PRF-01E**

Project Name: 2-BR Apartment **Calculation Date/Time:** 2020-02-18T13:59:47-08:00 **(Page 5 of 9)**

Calculation Description: Title 24 Analysis **Input File Name:** 20-012 - FASHION PARK APARTMENTS - LAUTERBACH.ribd19x

OPAQUE SURFACE CONSTRUCTIONS

01	02	03	04	05	06	07	08
Construction Name	Surface Type	Construction Type	Framing	Total Cavity R-value	Interior / Exterior Continuous R-value	U-factor	Assembly Layers
R-15 Wall	Exterior Walls	Wood Framed Wall	2x4 @ 16 in. O. C.	R-15	None / None	0.095	Inside Finish: Gypsum Board Cavity / Frame: R-15 / 2x4 Exterior Finish: 3 Coat Stucco
Attic Roof2 Bedroom Apartment	Attic Roofs	Wood Framed Ceiling	2x4 @ 24 in. O. C.	R-0	None / None	0.644	Roofing: Light Roof (Asphalt Shingle) Roof Deck: Wood Siding/sheathing/decking Cavity / Frame: no insul. / 2x4
R-30 Roof Attic	Ceilings (below attic)	Wood Framed Ceiling	2x4 @ 24 in. O. C.	R-30	None / None	0.032	Over Ceiling Joists: R-20.9 insul. Cavity / Frame: R-9.1 / 2x4 Inside Finish: Gypsum Board
R-19 Floor No Crawlspace	Exterior Floors	Wood Framed Floor	2x10 @ 16 in. O. C.	R-19	None / None	0.047	Floor Surface: Carpeted Floor Deck: Wood Siding/sheathing/decking Cavity / Frame: R-19 / 2x10

BUILDING ENVELOPE - HERS VERIFICATION

01	02	03	04
Quality Insulation Installation (QII)	Quality Installation of Spray Foam Insulation	Building Envelope Air Leakage	CFM50
Not Required	Not Required	Not Required	n/a

CERTIFICATE OF COMPLIANCE **CF1R-PRF-01E**

Project Name: 2-BR Apartment **Calculation Date/Time:** 2020-02-18T13:59:47-08:00 **(Page 6 of 9)**

Calculation Description: Title 24 Analysis **Input File Name:** 20-012 - FASHION PARK APARTMENTS - LAUTERBACH.ribd19x

WATER HEATING SYSTEMS

01	02	03	04	05	06	07	08	09	10
Name	System Type	Distribution Type	Water Heater Name (#)	Solar Fraction (%)	Compact Distribution	HERS Verification	Status	Verified Existing Condition	Existing Water Heating System
DHW Sys 1	Domestic Hot Water (DHW)	Standard Distribution System	DHW Heater 1 (1)	0	None	n/a	Existing	No	

WATER HEATING - HERS VERIFICATION

01	02	03	04	05	06	07	08
Name	Pipe Insulation	Parallel Piping	Compact Distribution	Compact Distribution Type	Recirculation Control	Central DHW Distribution	Shower Drain Water Heat Recovery
DHW Sys 1 - 1/1	Not Required	Not Required	Not Required	None	Not Required	Not Required	Not Required

SPACE CONDITIONING SYSTEMS

01	02	03	04	05	06	07	08	09	10	11	12
Name	System Type	Heating Unit Name	Cooling Unit Name	Fan Name	Distribution Name	Required Thermostat Type	Heating Equipment Count	Cooling Equipment Count	Status	Verified Existing Condition	Existing HVAC System
HVAC System1	Heating and cooling system other	Heating Component 1	Cooling Component 1	HVAC Fan 1	Air Distribution System 1	Setback	1	1	New	No	n/a

HVAC - HEATING UNIT TYPES

01	02	03	04	05
Name	System Type	Number of Units	Heating Efficiency Type	Efficiency
Heating Component 1	Gas wall furnace	1	AFUE	96.2

CERTIFICATE OF COMPLIANCE **CF1R-PRF-01E**

Project Name: 2-BR Apartment **Calculation Date/Time:** 2020-02-18T13:59:47-08:00 **(Page 7 of 9)**

Calculation Description: Title 24 Analysis **Input File Name:** 20-012 - FASHION PARK APARTMENTS - LAUTERBACH.ribd19x

HVAC - COOLING UNIT TYPES

01	02	03	04	05	06	07	08
Name	System Type	Number of Units	Efficiency EER	Efficiency SEER	Zonally Controlled	Multi-speed Compressor	HERS Verification
Cooling Component 1	Central split AC	1	12.5	15	Not Zonal	Single Speed	Cooling Component 1-hers-cool

HVAC COOLING - HERS VERIFICATION

01	02	03	04	05	06
Name	Verified Airflow	Airflow Target	Verified EER	Verified SEER	Verified Refrigerant Charge
Cooling Component 1-hers-cool	Not Required	0	Required	Required	Not Required

HVAC - DISTRIBUTION SYSTEMS

01	02	03	04	05	06	07	08	09	10	11	12	13	14	15	16
			Duct Ins. R-value		Duct Location		Surface Area								
Name	Type	Design Type	Supply	Return	Supply	Return	Supply	Return	Bypass Duct	Duct Leakage	HERS Verification	Status	Verified Existing Condition	Existing Distribution system	New Ducts 40 ft
Air Distribution System 1	Conditioned space-entirely	Non-Verified	R-6	R-6	Conditioned Zone	Conditioned Zone	n/a	n/a	No Bypass Duct	Existing (not specified)	Air Distribution System 1-hers-dist	Existing + New	No	n/a	n/a

HVAC - FAN SYSTEMS

01	02	03	04
Name	Type	Fan Power (Watts/CFM)	Name
HVAC Fan 1	HVAC Fan	0.58	HVAC Fan 1-hers-fan

CERTIFICATE OF COMPLIANCE **CF1R-PRF-01E**

Project Name: 2-BR Apartment **Calculation Date/Time:** 2020-02-18T13:59:47-08:00 **(Page 8 of 9)**

Calculation Description: Title 24 Analysis **Input File Name:** 20-012 - FASHION PARK APARTMENTS - LAUTERBACH.ribd19x

HVAC FAN SYSTEMS - HERS VERIFICATION

01	02	03
Name	Verified Fan Watt Draw	Required Fan Efficiency (Watts/CFM)
HVAC Fan 1-hers-fan	Not Required	0

CERTIFICATE OF COMPLIANCE **CF1R-PRF-01E**

Project Name: 2-BR Apartment **Calculation Date/Time:** 2020-02-18T13:59:47-08:00 **(Page 9 of 9)**

Calculation Description: Title 24 Analysis **Input File Name:** 20-012 - FASHION PARK APARTMENTS - LAUTERBACH.ribd19x

DOCUMENTATION AUTHOR'S DECLARATION STATEMENT

I. I certify that this Certificate of Compliance documentation is accurate and complete.

Documentation Author Name: Shane Judd	Documentation Author Signature: Shane Judd
Company: All-Trade Engineering	Signature Date: 02/18/2020
Address: 17 E High St.	CEA/ HERS Certification Identification (If applicable):
City/State/Zip: Moorpark, CA 93021	Phone: (805) 552-4000

RESPONSIBLE PERSON'S DECLARATION STATEMENT

I certify the following under penalty of perjury, under the laws of the State of California:

1. I am eligible under Division 3 of the Business and Professions Code to accept responsibility for the building design identified on this Certificate of Compliance.
2. I certify that the energy features and performance specifications identified on this Certificate of Compliance conform to the requirements of Title 24, Part 1 and Part 6 of the California Code of Regulations.
3. The building design features or system design features identified on this Certificate of Compliance are consistent with the information provided on other applicable compliance documents, worksheets, calculations, plans and specifications submitted to the enforcement agency for approval with this building permit application.

Responsible Designer Name: Shane Judd	Responsible Designer Signature: Shane Judd
Company: All-Trade Engineering	Date Signed: 02/18/2020
Address: 17 E High St.	License: C70991
City/State/Zip: Moorpark, CA 93021	Phone: (805) 552-4000

NOTICE: This certificate has been generated by California Energy Registry, Inc. ("Cal Energy") using information uploaded by third parties not affiliated or related to Cal Energy. Therefore, Cal Energy is not responsible for, and cannot guarantee,

LAUTERBACH & ASSOCIATES ARCHITECTS INC.
David C. Kesterson, Architect • Ilona Scott, Architect • Mark S. Pettit, Architect
300 MONTGOMERY AVENUE, OXNARD, CALIFORNIA 93030 | 805-988-0912 | FAX 805-981-4510 | www.la-arch.com

REGISTERED PROFESSIONAL ENGINEER SHANE DENNIS JUDD No. M24632 MECHANICAL STATE OF CALIFORNIA

REGISTERED PROFESSIONAL ENGINEER SHANE DENNIS JUDD No. C70991 CMS STATE OF CALIFORNIA

FASHION PARK APARTMENTS

234, 251 & 257 FASHION PARK
OXNARD, CA, 93036

CITY OF OXNARD HOUSING AUTHORITY

435 S. D STREET
OXNARD, CALIFORNIA 93030

NO	DESCRIPTION	DATE
1	SUBMIT	4/8/2020

ISSUE

JOB NO. 20-190209

DRAWN BY:
CHECKED BY:
PROJECT MANAGER:
PRINT DATE: 2/15/19 8:36:51 AM

TITLE 24 CALCS

N-2

THESE DRAWINGS AND SPECIFICATIONS ARE THE PROPERTY AND COPYRIGHT OF LAUTERBACH & ASSOCIATES. ALL RIGHTS RESERVED, AND SHALL NOT BE USED ON ANY OTHER WORK OR PROJECT EXCEPT BY WRITTEN AGREEMENT WITH LAUTERBACH & ASSOCIATES. WRITTEN DIMENSIONS SHALL TAKE PRECEDENCE OVER SCALED DIMENSIONS AND SHALL BE VERIFIED ON THE JOB SITE. ANY DISCREPANCY SHALL BE BROUGHT TO THE NOTICE OF LAUTERBACH & ASSOCIATES PRIOR TO COMMENCEMENT OF ANY WORK.

PLUMBING NOTES

1. All work shall be in accordance and comply with the latest applicable city ordinance and the 2019 CPC.

2. It is the intent of these drawings that this be a complete plumbing installation. Any apparent errors shall be brought to the attention of the designer and/or tenant prior to proceeding.

3.. Contractor shall verify all existing conditions versus new installations to assure proper new installations can be completed properly prior to proceeding.

4. These plans shall be used only after approvals and permits have been secured by the proper jurisdiction of the department of building and safety.

5. All drawings and details are provided as a diagrammatic version of the proposed work. The contractor shall be held liable and responsible for all field verifications of equipment, materials, and installations.

6. Contractor shall verify all equipment is installed in accordance with manufacturer's recommendations and local code requirements prior to any installations.

7. Provide a reduced pressure backflow preventer for all soda lines.

8. Provide a backflow protection device for any equipment directly connected the water supply such as ice makers and coffee machines.

9. Penetrations of fire-resistive walls, floor-ceilings and roof ceilings shall be protected as required in CBC Section 713.

10. Exhaust outlets and plumbing vents shall terminate not less than 10' from or at least 3' above any openable window, door opening, air intake, vent shaft, adjacent building, and property line.

11. Overflow drains having the same size as roof drains and on independent drain lines are required. In lieu of this, overflow scuppers, 4" minimum high with a width equal to the circumference of the roof drain may be provided. Overflow system shall have inlets located two inches above the roof low points. [§ 1101.11 CPC].

12. All floor drains and floor sinks shall be installed with trap primers as required by code and jurisdictional requirements whether indicated on drawings or not.

13. All fixtures shall be provided as water saving devices per the following minimum requirements:
Water Closet: 1.28 gpf Urinal: 0.5 gpf Lavatory Faucet: 0.5 gpm Sink Faucet: 2.2 gpm Showerhead: 2.0 gpm

14. Waste and vent piping shall slope a minimum of 2%. Domestic piping shall slope towards its origin min 2%.

15. Pipes shall not come in direct contact with hangers. Furnish and install isolators at each pipe hanger and pipe support for cold water piping.

16. Insulation around hot water piping shall enter through hangers. Install approved insulation protection shield at each such penetration.

17. Valves shall be bronze body two piece ball valves rated to 600 psi working pressure full port with adjustable packing gland. Extend lever handle for hot water piping. Solder or thread ends as required.

18. Install above ground cleanouts at each change in direction of piping greater than 45 degrees, at minimum of 50' for piping 4" and smaller and 100' for larger piping. Cleanouts shall be full size of pipe unless otherwise indicated on the drawings; extended to surface of wall or floor with 45 degree fitting and closed with bronze flush, countersunk plugs. Install floor and wall cleanout covers for concealed piping.

19. Install flashing sleeves on stacks passing through the roof. Secure over stack flashing in accordance with manufacturer's instructions. Vent stacks and service lines through roof and decks shall be flashed with 4 lb. or heavier sheet lead, in one piece 10" skirt, 5" boot, with suitable counter-flashing assembly.

20. Connections between dissimilar metals shall be installed by means of an approved di-electric fitting.

21. Completely cover the pipe openings for all piping passing through walls, floor and ceiling with chrome plated, stamped steel, hinged, split ring escutcheons with set screw. Piping penetrating rated wall or floor construction shall be set in UL fire rated sleeve/coupling penetrators.

22. Materials: Sanitary drainage, vent, and storm water piping above grade shall be standard weight cast iron soil pipe and fittings with stainless steel couplings with neoprene gaskets. Sanitary drainage below grade to 5' outside of building shall be schedule 40 ABS or standard weight cast iron soil pipe fittings with extra heavy cast iron couplings with neoprene gaskets. Yard piping beyond 5' outside of building shall be either vitrified clay, cast iron, schedule 40 ABS or PVC as required by local authorities. Storm drainage piping below grade shall be standard weight cast iron soil pipe and fittings with extra heavy cast iron couplings with neoprene gaskets. Rectangular piping shall be Alhambra Foundry cast iron pipe and adapters. A470 series pipe with A480 series adapters.

Water system above ground piping shall be Type 'L' copper tubing with wrought copper fittings with 95-5 soldered joints. Water system piping below grade shall be Type 'K' copper with sweated connections. Piping shall be laid in a bed of sand and shall be coated or wrapped in an approved manner.

Condensate piping shall be Type 'L' copper with wrought copper fittings with 95-5 (Tin Antimony) soldered joints.

Gas piping shall be schedule 40 black steel with extra heavy malleable iron screwed fittings. Gas piping which is exposed to weather shall be schedule 40 galvanized steel with extra heavy galvanized malleable iron fittings. Buried piping shall be factory wrapped or coated in an approved manner.

Hangers and supports:	Max. Horiz. Spacing	Max Vert. Spacing	Min. Rod Size
Cast Iron Pipe	5 ft.	15 ft.	3/8"
Cu. Tubing 1.5" and smaller	6 ft.	10 ft.	3/8"
Cu. Tubing 2" and larger	10 ft.	10 ft.	3/8"

23. Supports and hangers are to be provided to properly support, secure and align piping and to meet conditions. Provide seismic bracing for hangers and supports supporting piping. Comply with the latest edition of the Sheet Metal and Air Conditioning Contractors National Association Inc. Seismic Restraint Manual as approved by ANSI.

24. Provide and install a 1" high manufactured plastic valve tag at each valve, cock, and control device in the plumbing system. Each tag shall be individually numbered, and shall identify the system being served, I.E. CW = Cold Water, HW = Hot Water, G = Gas. Fasten each tag with a standard solid brass chain.

25. Provide and install a water hammer arrestor on each branch serving plumbing equipment with quick closing, self-closing or solenoid valves. Arrestors shall be sized and located in accordance with the manufacturer's recommendations and shall be fabricated of Type 'K' copper. A piston shall provide permanent mechanical barrier between fluid and pre-load air charge. The arrestor shall be FDA approved for use in potable water systems and shall be fully guaranteed for the life of the system.

26. Where metallic pipelines penetrate concrete structures such as building floors or walls, use plastic sleeves, rubber seals, or approved dielectric material to prevent pipe contact with the concrete and reinforcing steel. On all pipe, coat bare steel appurtenances such as bolts, joint hardnesses, or flexible couplings with coal tar or elastomeric based mastic, coal tar epoxy, moldable sealant, wax tape or approved equivalent.

27. Piping shall not come in direct contact with structure. Isolate piping by means of resilient sleeves, mounts, or minimum ¼" approved resilient material.

28. Earthquake actuated automatic gas shutoff valve shall be installed and conform with the appropriate California and ANSI standards as well as all authorities having jurisdiction.

29. Provide an approved type pressure regulator set at 80 psi when local water pressure is in excess of 80 psi. CPC, Sec. 608.2

30. Water closet bowls used for public use shall be elongated in design and equipped with an open front seat. CPC, Sec. 408.1.

31. Controls for an accessible water closet shall be operable with one hand and shall not require tight grasping, pinching or twisting. Controls shall be mounted on the wide side of the toilet compartment space no more than 44 inches above the floor. CBC, Sec. 1115B.4.5

32. In seismic design categories C, D, E & F water heaters shall be strapped within the upper 1/3 and lower 1/3 of its vertical dimension. The lower strap shall be a minimum of 4 inches above the controls. CPC, Sec. 508.2.

33. WATER SUPPLY TESTING PARAMETERS – Upon completion of a section or of the entire hot and cold water supply system, it shall be tested and proved tight under a water pressure not less than 100 psi. The water used for tests shall be obtained from a potable source of supply. The piping shall withstand the test without leaking for a period of not less than 15 minutes.

34. WASTE LINE TESTING PARAMETERS – The piping of the plumbing, drainage, and venting systems shall be tested with water. The water test shall be applied to the drainage and vent systems either in its entirety or in sections. All openings in the piping shall be tightly closed, except the highest opening, and the system filled with water to point of overflow. No section shall be tested with less than 10 ft. head of water. The water shall be kept in the system, or in the portion under test, for at least fifteen minutes before inspection starts.

35. GAS LINE TESTING PARAMETERS – The piping of the gas system shall be tested to 1.5 times the maximum working pressure per UMC 1311.3 or CPC 1214.3. Required pressure tests of ten psi or less shall be performed with gauges of one-tenth of a pound incrementation or less. CPC 319.1.

36. Approved metallic water line connectors shall be used from shutoffs to plumbing fixtures. Rubber and plastics shall not be used.

37. All electrical, mechanical, and plumbing fixtures shall be elevated at least to the lowest finished floor of the habitable and non-habitable area.

Water Pipe Sizing Calculation

Date: DECEMBER 6, 2019

METER ADDRESS: 2950,2956 CONCORD DR.

WATER PRESSURE: TELEPHONE (805) 378-3000
MAXIMUM PRESSURE: MINIMUM PRESSURE: 50.00 ELEVATION: 20 METER SIZE: 1.5"

DEVELOPED LENGTH (LENGTH FROM WATER METER TO FURTHEST WATER FIXTURE IN ON-SITE): 100 FT.
EQUIVALENT LENGTH (DEVELOPED LENGTH x 1.50): . . . . . 150 FT.

P.R.V.: _____ YES __X__ NO MAKE: MODEL: SIZE: PRESS.:

BACKFLOW PREVENTOR (METER PROTECTION):
__X__ YES _____ NO MAKE: WILKINS MODEL: BF-375XL SIZE: 1.5"

WATER PRESSURE CALCULATION:

AVAILABLE PRESSURE: . . . . . +: 50.00
RESIDUAL PRESSURE: . . . . . -: 25.00
LOSS DUE TO ELEVATION: 16.00 X 0.43= . . . -: 6.88
LOSS THRU METER: . . . . . -: 7.00
LOSS THRU WATER SOFTENER: . . . . . -: 0.00
LOSS THRU P.R.V.: . . . . . -: 0.00
LOSS THRU BACKFLOW PREVENTOR: . . . . . -: 7.00

PRESSURE AVAILABLE FOR FRICTION LOSS: . . . : 4.16

ALLOWABLE FRICTION LOSS PER 100 FT.: 4.16 (PRESS. AVAIL. FOR FRICTION LOSS) X 100 ÷ 150 (DEVELOPED LENGTH) = 2.78 (PER 100 FT.)

PIPE SIZING per FIXTURE UNIT LOAD

2.78 P.S.I. DROP / 100 FT.			
	CW FV	CW FT	HW FT
1/2"	0	0	0
3/4"	0	4	4
1"	0	12	12
1-1/4"	0	23	23
1-1/2"	9	44	44
2"	57	146	119
2-1/2"	223	359	245
3"	--	--	--

HW 5 FPS MAX
CW 8 FPS MAX

GAS SIZING TABLE
TDL=100'

	CFH	MBH
1/2"	50	55
3/4"	104	114
1"	195	214
1-1/4"	400	440
1-1/2"	600	660
2"	1160	1216

FLUID TEMPERATURE RANGE (°F)	CONDUCTIVITY RANGE (in Btu-inch per hour per square foot per °F)	INSULATION MEAN RATING TEMPERATURE (°F)	NOMINAL PIPE DIAMETER (in inches)				
			< 1	1 to <1.5	1.5 to < 4	4 to < 8	8 and larger
			INSULATION THICKNESS REQUIRED (in inches)				
Above 350	0.32-0.34	250	4.5	5.0	5.0	5.0	5.0
251-350	0.29-0.32	200	3.0	4.0	4.5	4.5	4.5
201-250	0.27-0.30	150	2.5	2.5	2.5	3.0	3.0
141-200	0.25-0.29	125	1.5	1.5	2.0	2.0	2.0
105-140	0.22-0.28	100	1.0	1.5	1.5	1.5	1.5

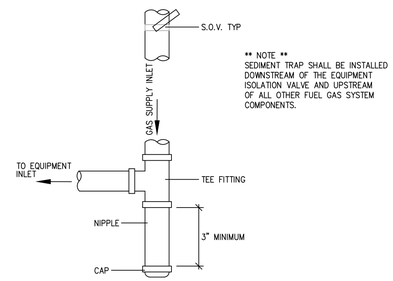

NO SCALE — GAS PIPING - SEDIMENT TRAP — 1 / P-0

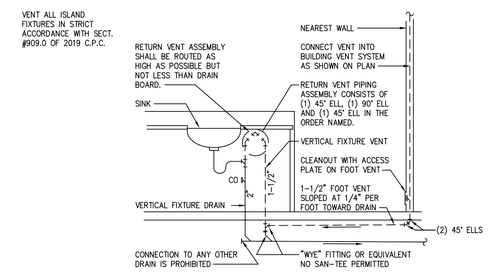

NO SCALE — ISLAND SINK WASTE / VENT PIPING — 2 / P-0

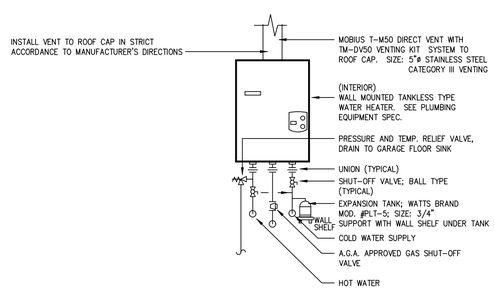

NO SCALE — TANKLESS WATER HEATER (INDOOR) — 3 / P-0

Plumbing Equipment Specification

WATER HEATER TANKLESS — BRAND: NORITZ — GAS INPUT: 100,000 BTUH
MOD. #:

REMARK: WALL MOUNTED ON EXTERIOR WALL AS SHOWN ON PLAN.
PROVIDE WITH TEMPERATURE REMOTE CONTROLLER. CONSULT OWNER'S REPRESENTATIVE FOR EXACT LOCATION OF REMOTE CONTROLLER(S).
SET DIP SWITCH ON CONTROL BOARD TO A MAX. 120° F.

*** NOTE ***
CONTRACTOR TO VERIFY EXACT SIZE, SLOPE AND LOCATION OF ALL EXISTING UTILITIES ON-SITE PRIOR TO CONSTRUCTION

PLUMBING LEGEND

#	VENT LINE & SIZE
#	WASTE LINE & SIZE (BUILDING SEWER SHALL BE LAID IN A FIRM BED OF SAND)
GW # GW	GREASE WASTE LINE & SIZE (BUILDING SEWER SHALL BE LAID IN A FIRM BED OF SAND)
#(#)	HOT WATER SUPPLY LINE SIZE(WSFU)
#(#)	COLD WATER SUPPLY LINE SIZE (WSFU)
FCW #(#) FCW	FILTERED COLD WATER SUPPLY LINE SIZE (WSFU)
G #(#) G	GAS PIPING SIZE (MBH)
	VENT LINE BELOW FLOOR
	HOT WATER SUPPLY LINE BELOW SLAB
	COLD WATER SUPPLY LINE BELOW SLAB
	CLEANOUT
	DWV, HW, CW RISER
	SHUT-OFF VALVE
	POINT OF CONNECTION (VIF)
(VIF)	VERIFY IN FIELD

THESE DRAWINGS AND SPECIFICATIONS ARE THE PROPERTY AND COPYRIGHT OF LAUTERBACH & ASSOCIATES. ALL RIGHTS RESERVED, AND SHALL NOT BE USED ON ANY OTHER WORK OR PROJECT EXCEPT BY WRITTEN AGREEMENT WITH LAUTERBACH & ASSOCIATES. WRITTEN DIMENSIONS SHALL TAKE PRECEDENCE OVER SCALED DIMENSIONS AND SHALL BE VERIFIED ON THE JOB SITE. ANY DISCREPANCY SHALL BE BROUGHT TO THE NOTICE OF LAUTERBACH & ASSOCIATES PRIOR TO COMMENCEMENT OF ANY WORK.

LAUTERBACH & ASSOCIATES
ARCHITECTS INC.
David C. Kesterson, Architect • Ilona Scott, Architect • Mark S. Pettit, Architect
300 MONTGOMERY AVENUE, OXNARD, CALIFORNIA 93036 | 805-988-0912 | FAX 805-981-4510 | www.la-arch.com

REGISTERED PROFESSIONAL ENGINEER SHANE DENNIS No. M24632 MECHANICAL STATE OF CALIFORNIA

REGISTERED PROFESSIONAL ENGINEER SHANE DENNIS No. C70391 CIVIL STATE OF CALIFORNIA

FASHION PARK APARTMENTS
234, 251 & 257 FASHION PARK
OXNARD, CA. 93036

CITY OF OXNARD HOUSING AUTHORITY
435 S. D STREET
OXNARD, CALIFORNIA 93030

NO	DESCRIPTION	DATE
1	SUBMIT	4/8/2020

ISSUE

JOB NO. 20-190209

DRAWN BY:
CHECKED BY:
PROJECT MANAGER:
PRINT DATE: 2/15/19 8:36:51 AM

PLUMBING NOTES/ DETAILS

P-0.0

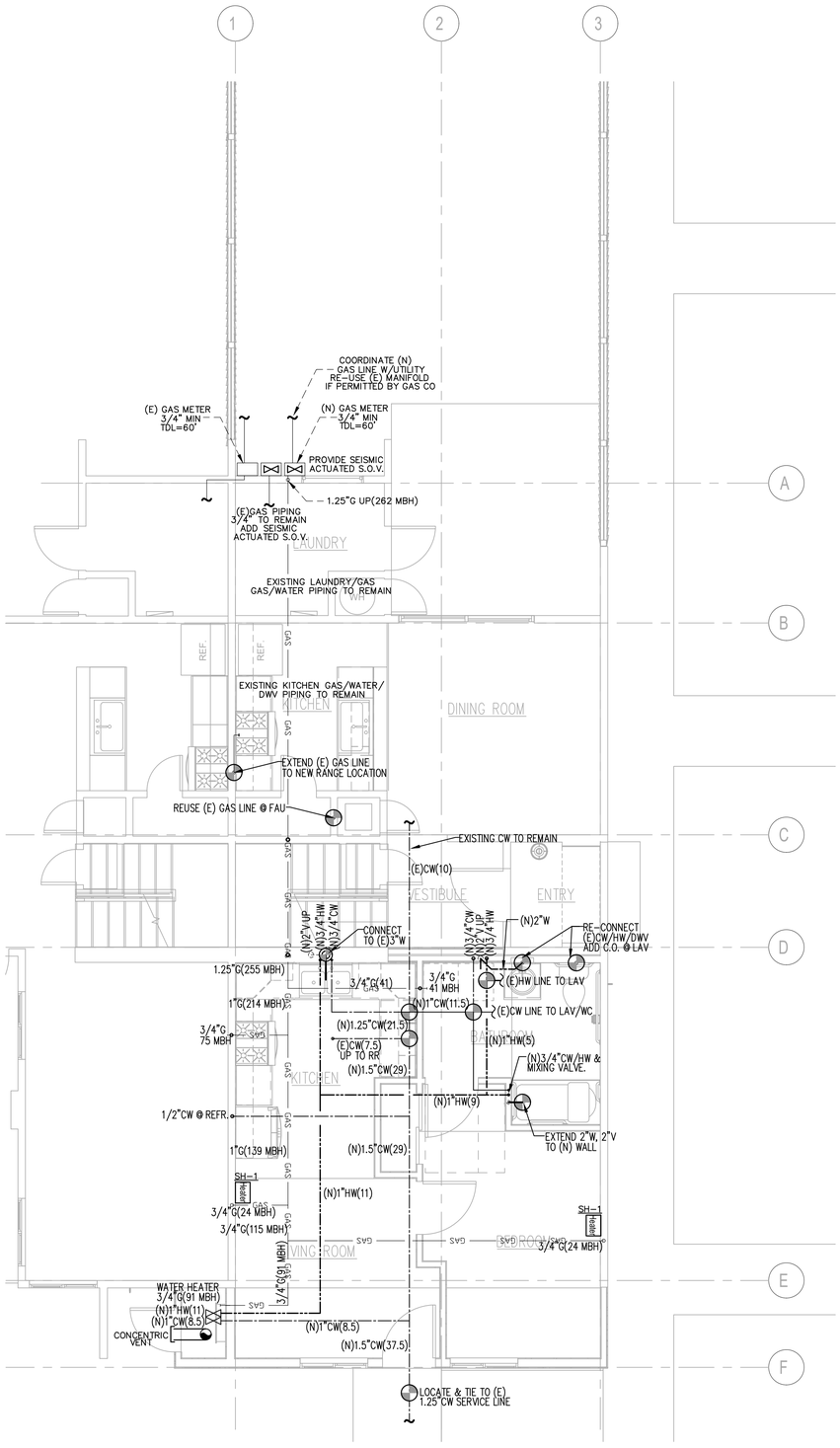

FIRST FLOOR PLUMBING PLAN

SCALE: 1/4":12"

*** NOTE ***
CONTRACTOR TO VERIFY EXACT SIZE, SLOPE AND LOCATION OF ALL EXISTING UTILITES ON-SITE PRIOR TO CONSTRUCTION

PLUMBING LEGEND

#/#	VENT LINE & SIZE
#	WASTE LINE & SIZE (BUILDING SEWER SHALL BE LAID IN A FIRM BED OF SAND)
GW #/# GW	GREASE WASTE LINE & SIZE (BUILDING SEWER SHALL BE LAID IN A FIRM BED OF SAND)
#(#)	HOT WATER SUPPLY LINE SIZE(WSFU)
#(#)	COLD WATER SUPPLY LINE SIZE (WSFU)
FCW #(#) FCW	FILTERED COLD WATER SUPPLY LINE SIZE (WSFU)
G #(#) G	GAS PIPING SIZE (MBH)
	VENT LINE BELOW FLOOR
	HOT WATER SUPPLY LINE BELOW SLAB
	COLD WATER SUPPLY LINE BELOW SLAB
	CLEANOUT
	DWV, HW, CW RISER
	SHUT-OFF VALVE
	POINT OF CONNECTION (VIF)
(VIF)	VERIFY IN FIELD

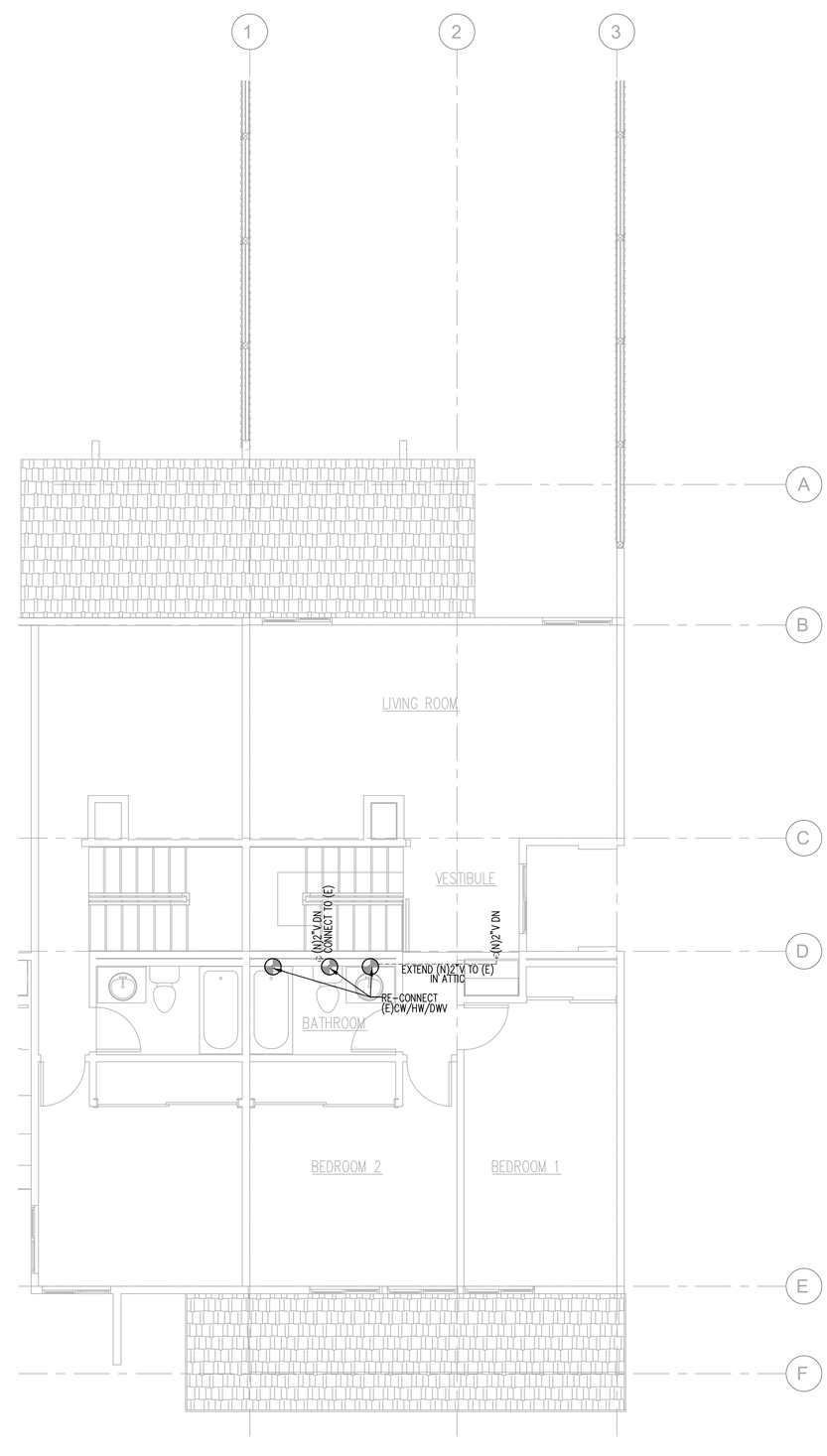

SECOND FLOOR PLUMBING PLAN

SCALE: 1/4":12"

THESE DRAWINGS AND SPECIFICATIONS ARE THE PROPERTY AND COPYRIGHT OF LAUTERBACH & ASSOCIATES. ALL RIGHTS RESERVED, AND SHALL NOT BE USED ON ANY OTHER WORK OR PROJECT EXCEPT BY WRITTEN AGREEMENT WITH LAUTERBACH & ASSOCIATES. WRITTEN DIMENSIONS SHALL TAKE PRECEDENCE OVER SCALED DIMENSIONS AND SHALL BE VERIFIED ON THE JOB SITE. ANY DISCREPANCY SHALL BE BROUGHT TO THE NOTICE OF LAUTERBACH & ASSOCIATES PRIOR TO COMMENCEMENT OF ANY WORK.

LAUTERBACH & ASSOCIATES
ARCHITECTS, INC.
David C. Kesterson, Architect • Ilona Scott, Architect • Mark S. Pettit, Architect
300 MONTGOMERY AVENUE, OXNARD, CALIFORNIA 93036 | 805-988-0912 | FAX 805-981-4510 | www.la-arch.com

REGISTERED PROFESSIONAL ENGINEER SHANE DENNIS LAMBERT No. M34632 MECHANICAL STATE OF CALIFORNIA

REGISTERED PROFESSIONAL ENGINEER SHANE DENNIS LAMBERT No. C74991 CIVIL STATE OF CALIFORNIA

FASHION PARK APARTMENTS

234, 251 & 257 FASHION PARK
OXNARD, CA. 93036

CITY OF OXNARD HOUSING AUTHORITY

435 S. D STREET
OXNARD, CALIFORNIA 93030

NO	DESCRIPTION	DATE
1	SUBMIT	4/8/2020

ISSUE

JOB NO. 20-190209

DRAWN BY:
CHECKED BY:
PROJECT MANAGER:
PRINT DATE: 2/15/19 8:36:51 AM

PLUMBING PLAN

P-1.0

LED FIXTURE SCHEDULE

TYPE	MANUFACTURER AND CATALOG NUMBER	LED MODULE TYPE	LED MODULE COLOR TEMP	LED MODULE WATTS	DRIVER	OPTIC/LENS	REMARKS
A / 20	JUNO JSF 13IN 18LM 30K 90CRI 120FRPC WH		3000K		FRPC	DIFFUSE	SLIM S/M 13"
B / 10	JUNO JSF 5IN 07LM 30K 90CRI 120FRPC WH		3000K		FRPC	DIFFUSE	SLIM S/M 5"
C / 24	TECH 700 BC BAS 24S - LED 927		2700K	24	ELECTRONIC	DIFFUSE	VANITY LIGHT

(N) PANEL SCHEDULE "A"

SERVICE: 120/240V 1Φ 3W | MAIN BKR.: MLO | BUS: 100A | LOC.: SEE PLAN | MTG.: FLUSH

REMARKS	LOAD ΦA	LOAD ΦB	REC	LTG	MISC	POLE	TRIP	CIRC		CIRC	TRIP	POLE	REC	LTG	MISC	LOAD ΦA	LOAD ΦB	REMARKS
LAUNDRY CIRCUIT	1500		2			1	20	1	*	2	20	1						GEN LTG
SMOKE DETECTORS		100			3			3		4		1						
BATHROOM CIRCUIT	500		1	1	1			5		6		1						
REFRIGERATOR		800	1					7	*	8	15	1			1			FAU
BATHROOM CIRCUIT	500		1	1	1			9		10	15	1			1			FAU
SPARE								11		12	20	1						SPARE
SMALL APPLIANCE CKT	1500							13		14								
"		1500						15		16								
EXT REC	500		1					17		18								
WH IGNITION		100			1			19		20								
SPARE								21		22								
"								23		24								

TOTAL WATTS= | ΦA= | ΦB=

AMPS= SEE ELECTRICAL LOAD CALCULATIONS | MINIMUM BKR | A.I.C. RATING= 10,000 AMPS SYM

* AFCI / GFCI COMBINATION CIRCUIT BREAKER | ALL CIRCUIT BREAKERS SHALL BE AFCI.

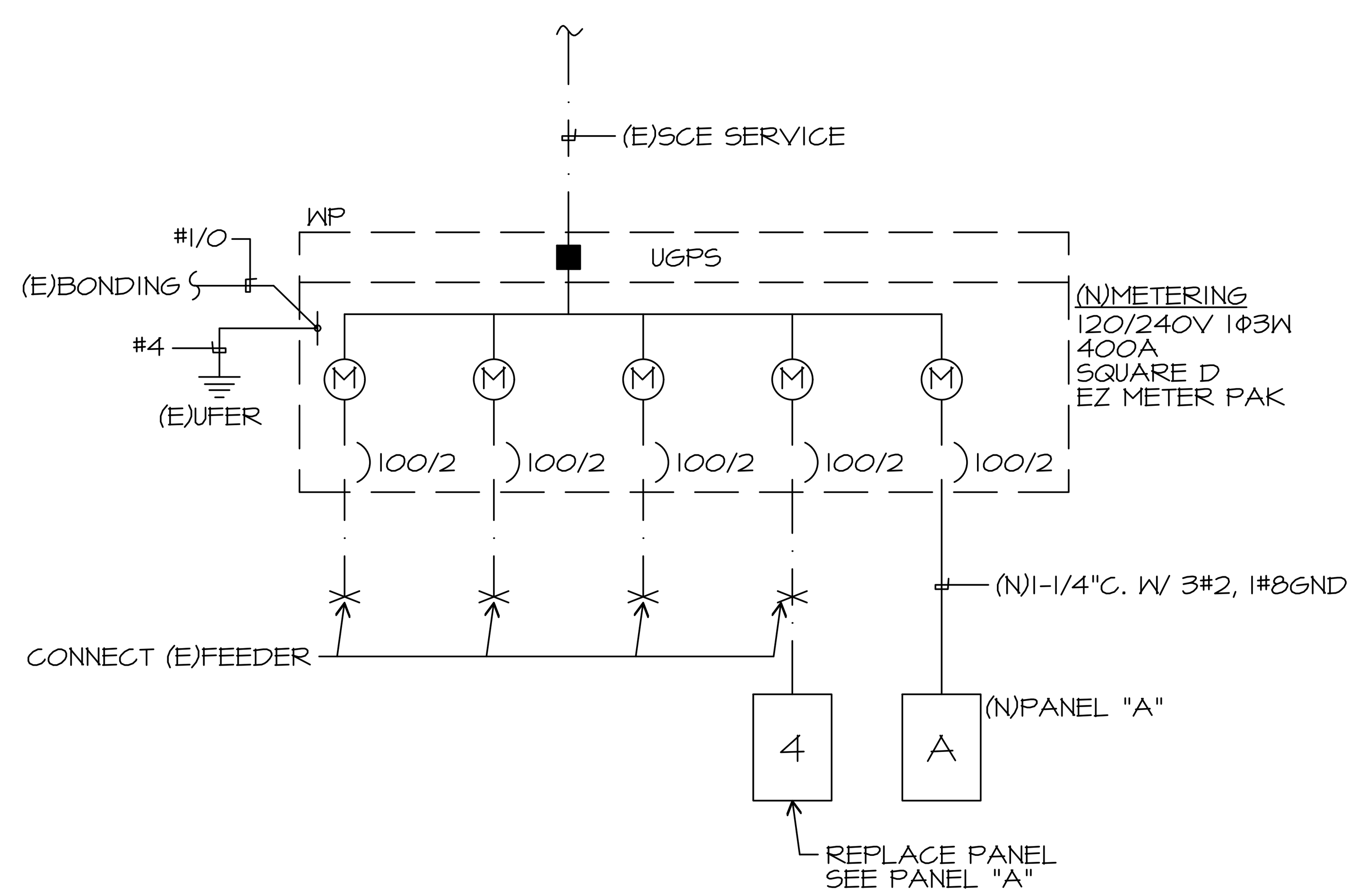

SINGLE LINE DIAGRAM

SCALE: NONE (A)

GENERAL NOTES

1. VISIT JOB SITE AND VERIFY EXISTING CONDITIONS PRIOR TO BID.
2. THE ELECTRICAL WORK SHALL BE INSTALLED IN ACCORDANCE WITH THE CALIFORNIA ELECTRICAL CODE AND ALL APPLICABLE LOCAL ORDINANCES. WHERE PLANS CALL FOR A HIGHER STANDARD THAN APPLICABLE CODES, THE PLANS SHALL GOVERN.
3. CONDUIT RUNS ARE SHOWN DIAGRAMMATICALLY. EXACT LOCATIONS SHALL BE DETERMINED IN THE FIELD TO SUIT FIELD CONDITIONS.
4. ALL ELECTRICAL EQUIPMENT, APPLIANCES AND LIGHTING FIXTURES SHALL BE LISTED BY A RECOGNIZED TEST LAB AND BEAR THAT LABEL OF APPROVAL.
5. CONTRACTOR SHALL FURNISH, INSTALL AND CONNECT ALL MATERIAL AND EQUIPMENT FOR THIS WORK UNLESS OTHERWISE NOTED.
6. FURNISH DISCONNECT SWITCHES AT REMOTE MOTORS.
7. ALL SPACES AS INDICATED ON PANELS OR SWITCHBOARDS SHALL BE COMPLETE WITH HARDWARE AND BUSSING FOR FUTURE BREAKER OR SWITCH.
8. CHECK ARCHITECTURAL PLANS FOR DOOR SWINGS BEFORE INSTALLING SWITCH OUTLETS.
9. GROUNDING AND BONDING SHALL BE PER CODE PLUS ANY ADDITIONAL PROVISIONS SPECIFIED OR SHOWN ON DRAWINGS.
10. ALL CONDUIT RUNS SHALL CONTAIN A CODE SIZED GREEN GROUND WIRE.
11. THESE PLANS ARE NOT COMPLETE UNTIL APPROVED BY THE AUTHORITY HAVING JURISDICTION.
12. ALL FEEDER CONDUCTORS SHALL BE IN CONDUIT. BRANCH CIRCUITS MAY BE NON-METALLIC SHEATHED CABLE.
13. ALL CONDUCTORS SHALL BE COPPER WITH TYPE THHN/THWN INSULATION.
14. COORDINATE WITH SERVING ELECTRICAL UTILITY COMPANY AND MAKE PROVISIONS FOR ELECTRICAL SERVICE ACCORDINGLY. INCLUDE ALL SERVICE COSTS AND UTILITY COMPANY CHARGES IN BID.
15. COORDINATE WITH SERVING TELEPHONE UTILITY COMPANY AND MAKE PROVISIONS FOR TELEPHONE SERVICE ACCORDINGLY. INCLUDE ALL SERVICE COSTS AND ANY UTILITY COMPANY CHARGES IN BID.
16. COORDINATE WITH SERVING CABLE TELEVISION COMPANY AND MAKE PROVISIONS FOR CABLE TELEVISION ACCORDINGLY. INCLUDE ALL SERVICE COSTS AND ANY UTILITY COMPANY CHARGES IN BID.
17. ALL PERMITS SHALL BE OBTAINED AND PAID FOR BY CONTRACTOR.
18. ALL RECEPTACLES IN DWELLING UNITS SHALL BE PROTECTED BY A LISTED ARC FAULT CIRCUIT INTERRUPTER, COMBINATION TYPE PER CEC 210.12
19. TAMPER RESISTANCE RECEPTACLE SHALL BE INSTALLED IN DWELLING UNITS PER CEC 406.11
20. SMOKE DETECTORS SHALL BE 120V, PHOTOELECTRIC/ION COMBINATION UNITS WITH BATTERY BACK UP
21. HALLWAY DETECTOR SHALL BE COMBINATION SMOKE AND CARBON MONOXIDE DETECTOR
22. VERIFY LOCATION OF FLUSH FLOOR RECEPTACLE PRIOR TO ROUGH IN
23. WP EXTERIOR RECEPTACLES SHALL HAVE HUBBEL #ML500 COVERS OR EQUAL
24. MANUFACTURER'S LITERATURE SHOWING PROPOSED LED AND/OR LOW VOLTAGE LIGHT FIXTURES ARE HIGH EFFICACY AND CALIFORNIA CERTIFIED IS TO BE ON SITE AT THE TIME OF FIELD INSPECTION.
25. WHERE BRANCH CIRCUIT WIRING IS MODIFIED, REPLACED OR EXTENDED, THE BRANCH CIRCUIT SHALL BE PROTECTED BY EITHER A LISTED COMBINATION TYPE AFCI LOCATED AT THE ORIGIN OF THE BRANCH CIRCUIT OR A LISTED OUTLET BRANCH-CIRCUIT TYPE AFCI LOCATED AT THE FIRST RECEPTACLE OF THE EXISTING BRANCH CIRCUIT.
26. ELECTRICAL EQUIPMENT FOR INDOOR ELECTRIC VEHICLE CHARGING STATIONS SHALL BE INSTALLED IN ACCORDANCE WITH CRC R328 AND THE CALIFORNIA ELECTRICAL CODE. THE ELECTRICAL SUPPLY CIRCUIT TO REQUIRED MECHANICAL EXHAUST VENTILATION EQUIPMENT SHALL BE INTERLOCKED WITH THE RECHARGING EQUIPMENT USED TO SUPPLY THE VEHICLE BEING CHARGED, AND SHALL REMAIN ENERGIZED DURING THE ENTIRE CHARGING CYCLE.
27. EXCEPT FOR DETACHED STORAGE BUILDINGS 1000 SQ. FEET OR LESS IN SIZE, PERMANENTLY INSTALLED LUMINARIES IN ROOMS OTHER THAN KITCHENS, BATHROOMS, GARAGES, LAUNDRY ROOMS, AND UTILITY ROOMS ARE TO BE HIGH EFFICACY, OR CONTROLLED BY A DIMMER SWITCH, OR CONTROLLED BY AN OCCUPANCY SENSOR THAT DOES NOT TURN ON AUTOMATICALLY OR HAVE AN ALWAYS-ON OPTION.
28. TWO MINIMUM 1" DIAMETER METALLIC CONDUITS SHALL BE PROVIDED THAT ORIGINATE AT A READILY ACCESSIBLE ATTIC LOCATION WITH PROXIMITY TO A SOLAR ZONE AREA COMPLYING WITH CALIFORNIA ENERGY CODE SECTION 110.10 AND TERMINATE AT A MINIMUM 4" ELECTRICAL PANEL. THE ELECTRICAL JUNCTION BOX AND SEGMENT OF CONDUIT RUN IN THE ATTIC SHALL BE PERMANENTLY AND VISIBLY MARKED AS "FOR FUTURE SOLAR PHOTOVOLTAIC".
29. ALL KITCHEN CIRCUITS SHALL HAVE GFCI PROTECTION.

SYMBOLS

- CONDUIT EXISTING
- CONDUIT CONCEALED IN WALL OR CEILING
- CONDUIT CONCEALED UNDER FLOOR OR BELOW GRADE
- CONDUIT STUBBED OUT AND CAPPED
- CONDUIT TURNED UP
- CONDUIT TURNED DOWN
- HATCH MARKS INDICATE NO. OF #12 WIRES IN CODE SIZED CONDUIT (3) MAX. IN 1/2" C., (5) MAX. IN 3/4" C., (8) MAX. IN 1"C., NO MARKS = 2#12
- A-3 — HOME RUN: LETTER INDICATES PANEL, NUMBER(S) INDICATES CIRCUIT(S).
- SAWCUT
- GROUND CONNECTION
- DISTRIBUTION SWITCHBOARD OR PANEL
- PANEL, BRANCH CIRCUIT TYPE, SURFACE AND FLUSH
- SIGNAL TERMINAL CABINET, SURFACE & FLUSH
- FLUORESCENT FIXTURE
- OUTLET DATA: BAR INDICATES WALL MOUNT, LETTER INDICATES SWITCH CONTROL, NO. INDICATES CIRCUIT.
- SURFACE FIXTURE ON FLUSH OUTLET.
- RECESSED FIXTURE WITH JUNCTION BOX FOR THRU WIRING
- EXIT LIGHT WITH ARROWS AS SHOWN ON PLANS, WALL AND CEILING MOUNT.
- LOW LEVEL EXIT SIGN, +6" AFF, +4" FROM DOOR JAMB
- A / 100 — LIGHT FIXTURE DESIGNATION, LETTER INDICATES TYPE, NO. INDICATES WATTAGE. SEE FIXTURE SCHEDULE.
- FC / 1 — MECHANICAL EQUIPMENT DESIGNATION. SEE MECHANICAL DRAWINGS.
- SPECIAL RECEPTACLE - SEE PLAN
- METER
- FLUSH FLOOR RECEPTACLE
- RECEPTACLE, DUPLEX, 15A, 125V, NEMA 5-15R +18" U.N.O.
- DUPLEX RECEPTACLE MTD. ABOVE BACKSPLASH
- DUPLEX RECEPTACLE W/LOWER HALF SWITCHED
- GFI — GROUND FAULT CIRCUIT INTERRUPTING RECEPTACLE
- DOUBLE DUPLEX RECEPTACLE
- CEILING RECEPTACLE
- RECEPTACLE, DUPLEX, 20A, 125V, NEMA 5-20R +18" U.N.O.
- JUNCTION BOX 4" SQUARE, 1-1/2" DEEP U.N.O.
- THERMOSTAT F.B.O. +48"
- MOTOR, NO. INDICATES HORSEPOWER
- CLOCK OUTLET +7'-6" U.N.O.
- DISCONNECT SWITCH, NON-FUSED
- DISCONNECT SWITCH FUSED HORSEPOWER RATED OR SIZED AS NOTED
- COMBINATION MAGNETIC STARTER WITH DISCONNECT SWITCH AND FUSES
- MAGNETIC MOTOR STARTER W/OVERLOADS IN EACH PHASE
- DIMMER W/INTEGRAL "ON-OFF" SW.
- PUSHBUTTON
- PHOTOCELL
- SMOKE DETECTOR
- TELEPHONE/COMPUTER/DATA OUTLET, TWO GANG BOX W/1 GANG COVERPLATE & GROMMETED OPENING +18" U.N.O.
- CABLE TV OUTLET +18" U.N.O.
- MOTION SENSOR
- $ — EXISTING SWITCH
- S — SINGLE POLE SWITCH
- S^2 — DOUBLE POLE SWITCH
- S^3 — THREE WAY SWITCH
- S^P — SWITCH W/PILOT LT.
- (S, S^2, S^3, S^P:) QUIET TOGGLE TYPE RATED AT 20A 120/277V A.C. +42" U.N.O.
- S^M — MANUAL MOTOR STARTER
- FACP — FIRE ALARM CONTROL PANEL
- GFI — GROUND FAULT CIRCUIT INTERRUPTING
- LST — LABOR SAVING TANDEM
- MLO — MAIN LUGS ONLY
- W/ — WITH
- C.O. — CONDUIT ONLY
- W.P. — WEATHERPROOF
- F.B.O. — FURNISHED BY OTHERS, INSTALL & CONNECT
- U.N.O. — UNLESS NOTED OTHERWISE
- N.E.C. — NATIONAL ELECTRICAL CODE
- N.I.C. — NOT IN CONTRACT
- (E) — EXISTING
- (N) — NEW
- (R) — REMOVE
- (RL) — RELOCATE
- S/M — SURFACE MOUNT
- U/G — UNDERGROUND
- CWP — COLD WATER PIPE
- AFF — ABOVE FINISHED FLOOR
- HACR — HEATING AND AIR CONDITIONING RATED CIRCUIT BREAKER
- N.L. — NIGHT LIGHT

NOTE: NOT ALL SYMBOLS SHOWN ARE USED ON THIS PROJECT.

JMPE
ELECTRICAL ENGINEERING
LIGHTING DESIGN
CA REGISTRATION NO E13083
19531
627 OLIVE STREET
SANTA BARBARA CA 93101
(805) 569-9216
FAX (805) 569-2405
email : maloney@jmpe.net
www.jmpe.net

REGISTERED PROFESSIONAL ENGINEER JOHN MALONEY No. E013083 EXP. 06/30/2021 ELECTRICAL STATE OF CALIFORNIA

Project Architect
LAUTERBACH & ASSOCIATES
A R C H I T E C T S • I N C.
David C. Kesterson, Architect • Ilona Scott, Architect • Mark S. Pettit, Architect
300 MONTGOMERY AVENUE, OXNARD, CALIFORNIA 93036 | 805-988-0912 | FAX 805-981-4510 | www.la-arch.com

LICENSED ARCHITECT ILONA SCOTT No. C11881 Ren. 06/21 STATE OF CALIFORNIA

FASHION PARK APARTMENTS
234, 251 & 257 FASHION PARK
OXNARD, CA, 93036

CITY OF OXNARD HOUSING AUTHORITY
435 S. D STREET
OXNARD, CALIFORNIA 93030

NO	DESCRIPTION	DATE
1	SUBMIT	02-26-2020

ISSUE

JOB NO. 20-190209

DRAWN BY: -
CHECKED BY: -
PROJECT MANAGER: -
PRINT DATE:

GENERAL NOTES, SYMBOLS & DETAILS

E-001

THESE DRAWINGS AND SPECIFICATIONS ARE THE PROPERTY AND COPYRIGHT OF LAUTERBACH & ASSOCIATES. ALL RIGHTS RESERVED, AND SHALL NOT BE USED ON ANY OTHER WORK OR PROJECT EXCEPT BY WRITTEN AGREEMENT WITH LAUTERBACH & ASSOCIATES. WRITTEN DIMENSIONS SHALL TAKE PRECEDENCE OVER SCALED DIMENSIONS AND SHALL BE VERIFIED ON THE JOB SITE. ANY DISCREPANCY SHALL BE BROUGHT TO THE NOTICE OF LAUTERBACH & ASSOCIATES PRIOR TO COMMENCEMENT OF ANY WORK.

File Path

STATE OF CALIFORNIA

LIGHTING – MULTI FAMILY DWELLINGS

CEC-CF2R-LTG-02-E (Revised 01/20) CALIFORNIA ENERGY COMMISSION

CERTIFICATE OF INSTALLATION		CF2R-LTG-02-E
Lighting – Multi-Family Dwellings		(Page 1 of 4)
Project Name: FASHION PARK	Enforcement Agency:	Permit Number:
Dwelling Address:	City:	Zip Code:

A. Installed Lighting and Controls		
Select Yes or No according to whether your work on the project includes each of the following types of lighting and controls. See Section B. thru N. for applicable compliance requirements.		Y or N
01	High efficacy luminaires installed in any interior rooms. (See Section B.)	
02	JA8 compliant luminaires and controls installed in any interior rooms. (See Section B.)	
03	Recessed downlight luminaires in ceilings in any interior rooms. (See Section C.)	
04	Screw-based luminaires installed in any interior rooms. (See Section D.)	
05	Enclosed or recessed luminaires installed in any interior rooms. (See Section D.)	
06	Lighting and controls in bathrooms. (See Section E.)	
07	Lighting and controls in laundry rooms. (See Section E.)	
08	Lighting and controls in utility rooms. (See Section E.)	
09	Lighting and controls in garage. (See Section E.)	
10	Outdoor lighting and controls. (See Section H. & I.)	
11	Blank electrical boxes installed more than 5 feet from finished floor. (See Section F.)	
12	Internally illuminated address signs. (See Section G.)	
13	Parking Garages. (See Section J.)	
14	Parking lots or carports. (See Section H. & I.)	
15	Common areas. See (Section K. & L.)	

B. High Efficacy Luminaires and Controls	
01	150.0(k)1A and Table 150.0-A: All luminaires are installed with: • Light sources of one of the lighting technologies specified under the "High Efficacy" column of TABLE 150.0-A; or • JA8 compliant light sources and the light sources are marked with a label reading "JA8-2019" or "JA8-2019-E".
02	150.0(k)2J: Dimming controls for all luminaires with dimmable JA8 compliant light sources except for those controlled by occupancy or vacancy sensors.
03	150.0(k)2A: Forward phase cut dimmers used with LED light sources shall comply with NEMA SSL 7A.
The responsible person's signature on this compliance document affirms that all applicable requirements in this table have been met.	

C. Recessed Downlight Luminaires in Ceilings	
01	150.0(k)1Cv: Do not contain screw based sockets.
02	The luminaire shall be marked with "JA8-2019".
03	150.0(k)1Ci: Listed for zero clearance insulation contact (IC).
04	150.0(k)1Cii: Has label certifying air tight.
05	150.0(k)1Ciii: Sealed with a gasket or caulk between the luminaire housing and ceiling, and all air leakage paths between conditioned and unconditioned spaces are sealed with a gasket or caulk.
06	150.0(k)1Civ: Allows ballast maintenance and replacement to be readily accessible to building occupants from below the ceiling without requiring the cutting of holes in the ceiling.
The responsible person's signature on this compliance document affirms that all applicable requirements in this table have been met.	

D. Additional Luminaire Requirements	
01	150.0(k)1G: **Screw based luminaires** are installed with all of the following requirements: • The luminaire is not recessed downlight luminaire in ceilings; and • The luminaires are installed with lamps or light sources marked with "JA8-2019"..
02	150.0(k)1H: **Enclosed or Recessed Luminaires** are installed with lamps or other separable light sources marked with "JA8-2019-E".
03	150.0(k)1D: Ballasts for fluorescent lamps rated 13 Watts or greater are electronic.
04	150.0(k)1E: Night lights**, step lights and path lights** are rated to consume no more than 5 Watts of power and emit more than 150 lumens, or in compliance with Table 150.0-A, or controlled, or controlled by vacancy sensors.
05	150.0(k)1F: **Lighting integral to exhaust fans** meets the requirements of Table 150.0-A, with exception to the lighting installed by the manufacturer in kitchen exhaust hoods.
The responsible person's signature on this compliance document affirms that all applicable requirements in this table have been met.	

E. Additional Lighting Controls	
01	150.0(k)2J: In **bathrooms, garages, laundry rooms, and utility rooms**, at least one luminaire in each of these spaces is controlled by an

For information and data collection only. Not valid until registered with a HERS provider

STATE OF CALIFORNIA

LIGHTING – MULTI FAMILY DWELLINGS

CEC-CF2R-LTG-02-E (Revised 01/20) CALIFORNIA ENERGY COMMISSION

CERTIFICATE OF INSTALLATION		CF2R-LTG-02-E
Lighting – Multi-Family Dwellings		(Page 2 of 4)
Project Name: FASHION PARK	Enforcement Agency:	Permit Number:
Dwelling Address:	City:	Zip Code:

	occupant or vacancy sensor providing automatic-off functionality.
02	150.0(k)2B: **Exhaust fans** are controlled separately from lighting systems, or the lighting can be turned OFF on the same control as the fan.
03	150.0(k)2C: Lighting has readily accessible wall-mounted controls that allow the lighting to be manually turned ON and OFF.
04	150.0(k)2D: Lighting controls and equipment are installed in accordance with manufacturer's instructions
05	150.0(k)2E: No controls bypasses a dimmer, occupancy sensor or vacancy sensor function where that dimmer or sensor has been installed to comply with Section 150.0(k)
06	150.0(k)2F: Lighting controls comply with the applicable requirements in Section 110.9.
07	150.0(k)2G: **Energy Management Control Systems** used to comply with control requirements provide the functionality of the specified control in accordance with Section 110.9, meet the installation certificate requirements in Section 130.4, meets the EMCS requirements in Section 130.5, and comply with all other applicable requirements in Section 150.0(k)2.
08	150.0(k)2H: A **multi-scene programmable controller** used to comply with dimmer requirements provides the functionality of a dimmer in accordance with Section 110.9, and complies with all other applicable requirements in Section 150.0(k)2.
09	150.0(k)2K: **Undercabinet lighting** is controlled separately from ceiling installed lighting.
The responsible person's signature on this compliance document affirms that all applicable requirements in this table have been met.	

F. Blank Electrical Boxes	
01	150.0(k)1B: The number of blank electrical boxes installed more than 5 feet above the finished floor and do not contain a luminaire or other device, are not greater than the number of bedrooms. The blank boxes are served by a dimmer, a vacancy sensor or fan speed control.
The responsible person's signature on this compliance document affirms that all applicable requirements in this table have been met.	

G. Address Signs	
01	150.0(k)4: Internally illuminated address signs. Internally illuminated address signs shall either: • Comply with Section 140.8. Applicable nonresidential sign lighting compliance forms shall also be submitted, or • Consume no more than 5 watts of power.
The responsible person's signature on this compliance document affirms that all applicable requirements in this table have been met.	

H. For Low-rise Multi-family Residential Buildings with four or more dwelling units, Outdoor Lighting for Private Patios, Entrances, Balconies, Porches, Residential parking lots, and Carports with less than 8 vehicles per site shall comply with requirements in Box 01 or Box 02 below.	
01	150.0(k)3Bi: Outdoor lighting is controlled by a manual ON and OFF switch that permits one of the following automatic actions: • Controlled by a photocell and either a motion sensor or an automatic time switch control; or • Controlled by an astronomical time clock control; Control that override to ON shall not be allowed unless the override automatically returns the automatic control to its normal operation within 6 hours. An energy management control that provides the specified lighting control functionality and complies with all requirements applicable to the specified controls may be used to meet the above requirements.
02	150.0(k)3Bii: Outdoor lighting complies with the applicable requirements in Sections 110.9, 130.0, 130.2, 130.4, 140.7, and 141.0. Applicable LTO forms shall also be submitted.
The responsible person's signature on this compliance document affirms that all applicable requirements in this table have been met.	

I. For Low-rise Multifamily Buildings with Four or More Dwelling Units, Outdoor Lighting for Residential Parking Lots or Carports with Eight or More Vehicles per site shall comply with requirements in Box 01 below	
01	150.0(k)3C: Outdoor lighting complies with the applicable requirements in Sections 110.9, 130.0, 130.2, 130.4, 140.7, and 141.0. Applicable LTO forms shall be submitted.
The responsible person's signature on this compliance document affirms that all applicable requirements in this table have been met.	

J. Lighting for Residential Garages for Eight or More Vehicles	
01	150.0(k)5: Lighting complies with the applicable requirements for nonresidential garages in Sections 110.9, 130.0, 130.1, 130.4, 140.6, and 141.0. Applicable LTG forms shall also be submitted.
The responsible person's signature on this compliance document affirms that all applicable requirements in this table have been met.	

K. Lighting for Interior Common Areas (≤ 20%) of Low-rise Multi-family

STATE OF CALIFORNIA

LIGHTING – MULTI FAMILY DWELLINGS

CEC-CF2R-LTG-02-E (Revised 01/20) CALIFORNIA ENERGY COMMISSION

CERTIFICATE OF INSTALLATION		CF2R-LTG-02-E
Lighting – Multi-Family Dwellings		(Page 3 of 4)
Project Name: FASHION PARK	Enforcement Agency:	Permit Number:
Dwelling Address:	City:	Zip Code:

01	150.0(k)6A: Installed lighting shall comply with Table 150.1-A and be controlled by an occupancy sensor.
The responsible person's signature on this compliance document affirms that all applicable requirements in this table have been met.	

L. Lighting for Interior Common Areas (> 20%) of Low-rise Multi-family	
01	150.0(k)6Bi: Installed lighting shall comply with the applicable requirements in Sections 110.9, 130.0, 130.1, 140.6, and 141.0. Applicable nonresidential lighting compliance (NRCC-LTG) forms shall also be submitted.
02	150.0(k)6Bii: Lighting installed in corridors and stairwells is controlled by occupant sensors that reduce the lighting power by at least 50% and capable of turning light fully on and off from paths of ingress and egress.
The responsible person's signature on this compliance document affirms that all applicable requirements in this table have been met.	

STATE OF CALIFORNIA

LIGHTING – MULTI FAMILY DWELLINGS

CEC-CF2R-LTG-02-E (Revised 01/20) CALIFORNIA ENERGY COMMISSION

CERTIFICATE OF INSTALLATION		CF2R-LTG-02-E
Lighting – Multi-Family Dwellings		(Page 4 of 4)
Project Name: FASHION PARK	Enforcement Agency:	Permit Number:
Dwelling Address:	City:	Zip Code:

DOCUMENTATION AUTHOR'S DECLARATION STATEMENT	
1. I certify that this Certificate of Installation documentation is accurate and complete.	
Documentation Author Name:	Documentation Author Signature:
Documentation Author Company Name:	Date Signed:
Address:	CEA/HERS Certification Identification (if applicable):
City/State/Zip:	Phone:

RESPONSIBLE PERSON'S DECLARATION STATEMENT

I certify the following under penalty of perjury, under the laws of the State of California:

1. The information provided on this Certificate of Installation is true and correct.
2. I am either: a) a responsible person eligible under Division 3 of the Business and Professions Code in the applicable classification to accept responsibility for the system design, construction, or installation of features, materials, components, or manufactured devices for the scope of work identified on this Certificate of Installation, and attest to the declarations in this statement, or b) I am an authorized representative of the responsible person and attest to the declarations in this statement on the responsible person's behalf.
3. The constructed or installed features, materials, components or manufactured devices (the installation) identified on this Certificate of Installation conforms to all applicable codes and regulations and the installation conforms to the requirements given on the Certificate of Compliance, plans, and specifications approved by the enforcement agency.
4. I will ensure that a registered copy of this Certificate of Installation shall be posted or made available with the building permit(s) issued for the building, and made available to the enforcement agency for all applicable inspections. I understand that a registered copy of this Certificate of Installation is required to be included with the documentation the builder provides to the building owner at occupancy.

Responsible Builder/Installer Name:	Responsible Builder/Installer Signature:	
Company Name: (Installing Subcontractor or General Contractor or Builder/Owner)	Position With Company (Title):	
Address:	CSLB License:	
City/State/Zip:	Phone:	Date Signed:

CERTIFICATE OF INSTALLATION – USER INSTRUCTIONS	CF2R-LTG-02-E
Lighting – Multi-Family Dwellings	(Page 1 of 2)

CF2R-LTG-02-E User Instructions

There are two version of the residential lighting Certificate of Installation. This version, the CF2R-LTG-02-E, is used for demonstrating compliance with the residential lighting Standards for low-rise multi-family dwellings.

The other version of the lighting Certificate of Installation, the CF2R-LTG-01-E, is used for demonstrating compliance with the residential lighting Standards for single family dwellings. The LTG-01 shall also be used to demonstrate compliance with the residential lighting requirements for high-rise residential dwelling units; outdoor lighting that is attached to a high-rise residential or hotel/motel building, and is separately controlled from the inside of a dwelling unit or guest room; fire station dwelling accommodations; hotel and motel guest rooms; and, dormitory and senior housing dwelling accommodations.

The primary difference between the LTG-02 and LTG-01 is that the LTG-02 includes additional requirements for demonstrating compliance with residential outdoor lighting, and common areas associated with low-rise multi-family dwelling unit.

Each dwelling unit shall separately comply with all of the applicable residential lighting Standards. Note that rooms and areas that are not within a dwelling unit shall comply with the nonresidential lighting Standards, and the nonresidential lighting compliance documents must also be submitted.

Section A. Checklist for Lighting and Controls Installed at this Site
This table is used to identify the scope of work being covered by the responsible person signing this document. One person may be responsible for all of the measures in this table, or several people may each be responsible for only a portion of the measures. If several people are responsible, each person must separately fill out this Certificate of Installation for those measures for which they are responsible. In some situations, such as for alterations and additions, only some of the measures may be included in the total scope of work.

For rows 1 through 14 – insert 'Y' for each measure that is included in the scope of work, and insert 'N' for each measure that is not included in the scope of work.

Section B. High Efficacy Luminaires and Controls
This table is a list of mandatory requirements high efficacy luminaires.

Section C. Recessed Downlight Luminaires in Ceilings
This table is a list of mandatory requirements for recessed downlight luminaires.

Section D. Additional Luminaire Requirements
This table is a list of additional requirements for luminaires.

Section E. Additional Lighting Controls
This table is a list of additional requirements for lighting controls.

Section F. Blank Electrical Boxes
This table is a list of mandatory requirements for blank electrical boxes.

Section G. Address Signs
This table is a list of mandatory requirements for address signs.

Section H. For Low-rise Multi-family Residential Buildings, Outdoor Lighting for Private Patios, Entrances, Balconies, Porches, residential parking lots and carports with less than 8 vehicles per site
This table is a list of mandatory requirements for low-rise multi-family residential buildings, outdoor lighting for private patios, entrances, balconies and porches.

Section I. For Low-rise Multi-family Buildings with Four or More Dwelling Units, Outdoor Lighting for Residential Parking Lots or Carports with Eight or More Vehicles
This table is a list of mandatory requirements for low-rise multi-family buildings with four or more dwelling units, outdoor lighting for other than private patios, entrances, balconies, porches, or for other than residential parking lots and residential carports with eight or more vehicles.

Section J. Lighting for Residential Garages with Eight or More Vehicles
This table is a list of mandatory requirements for lighting for residential garages with eight or more vehicles.

Section K. Lighting for Interior Common Areas (≤ 20%) for Low-rise Multi-family

CERTIFICATE OF INSTALLATION – USER INSTRUCTIONS	CF2R-LTG-02-E
Lighting – Multi-Family Dwellings	(Page 2 of 2)

This table is a list of mandatory requirements for lighting for interior common areas (≤ 20%) for low-rise multi-family.

Section L. Lighting for Interior Common Areas (> 20%) for Low-rise Multi-family
This table is a list of mandatory requirements for lighting for interior commons areas (> 20%) for low-rise multi-family.

JMPE
ELECTRICAL ENGINEERING
LIGHTING DESIGN
CA REGISTRATION NO E13083
19531
627 OLIVE STREET
SANTA BARBARA CA 93101
(805) 569-9216
FAX (805) 569-2405
email : maloney@jmpe.net
www.jmpe.net

REGISTERED PROFESSIONAL ENGINEER · MALONEY · No. E013083 · EXP. 06/30/2021 · ELECTRICAL · STATE OF CALIFORNIA

Project Architect
LAUTERBACH & ASSOCIATES
A R C H I T E C T S • I N C.
David C. Kesterson, Architect • Ilona Scott, Architect • Mark S. Pettit, Architect
300 MONTGOMERY AVENUE, OXNARD, CALIFORNIA 93036 | 805-988-0912 | FAX 805-981-4510 | www.la-arch.com

LICENSED ARCHITECT · ILONA SCOTT · No. C11881 · Ren. 06/21 · STATE OF CALIFORNIA

FASHION PARK APARTMENTS

234, 251 & 257 FASHION PARK
OXNARD, CA, 93036

CITY OF OXNARD HOUSING AUTHORITY

435 S. D STREET
OXNARD, CALIFORNIA 93030

NO	DESCRIPTION	DATE
1	SUBMIT	02-26-2020

ISSUE

JOB NO. 20-190209

DRAWN BY: -
CHECKED BY: -
PROJECT MANAGER: -
PRINT DATE:

RESIDENTIAL LIGHTING COMPLIANCE FORMS

E-002

THESE DRAWINGS AND SPECIFICATIONS ARE THE PROPERTY AND COPYRIGHT OF LAUTERBACH & ASSOCIATES, ALL RIGHTS RESERVED, AND SHALL NOT BE USED ON ANY OTHER WORK OR PROJECT EXCEPT BY WRITTEN AGREEMENT WITH LAUTERBACH & ASSOCIATES. WRITTEN DIMENSIONS SHALL TAKE PRECEDENCE OVER SCALED DIMENSIONS AND SHALL BE VERIFIED ON THE JOB SITE. ANY DISCREPANCY SHALL BE BROUGHT TO THE NOTICE OF LAUTERBACH & ASSOCIATES PRIOR TO COMMENCEMENT OF ANY WORK.

File Path

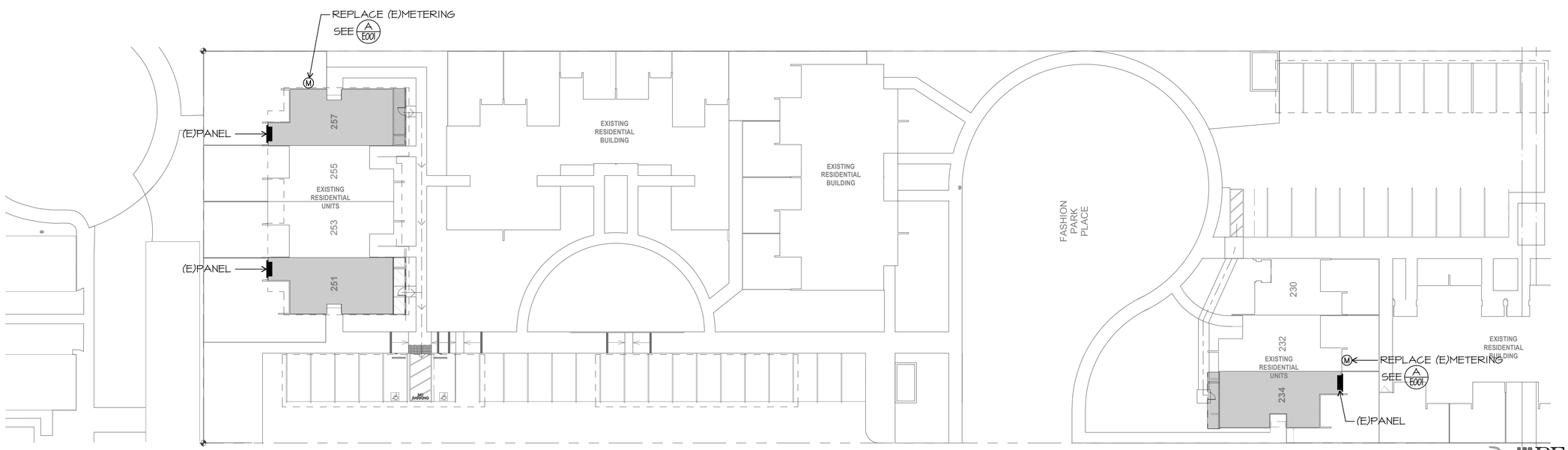

ELECTRICAL SITE PLAN

SCALE: 1" = 20'-0"

JMPE
ELECTRICAL ENGINEERING
LIGHTING DESIGN
CA REGISTRATION NO E13083
19531
627 OLIVE STREET
SANTA BARBARA CA 93101
(805) 569-9216
FAX (805) 569-2405
email : maloney@jmpe.net
www.jmpe.net

LICENSED PROFESSIONAL ENGINEER
JOHN MALONEY
No. E013083
Exp. 06/30/202
ELECTRICAL
STATE OF CALIFORNIA

NO	DESCRIPTION	DATE
1	SUBMIT	02-26-2020

ISSUE

JOB NO. 20-190209

DRAWN BY: -
CHECKED BY: -
PROJECT MANAGER: -
PRINT DATE:

ELECTRICAL SITE PLAN

E-003

Project Architect
LAUTERBACH & ASSOCIATES
ARCHITECTS INC.
David C. Kesterson, Architect • Ilona Scott, Architect • Mark S. Pettit, Architect
300 MONTGOMERY AVENUE, OXNARD, CALIFORNIA 93036 | 805-988-0912 | FAX 805-981-4510 | www.la-arch.com

LICENSED ARCHITECT
ILONA SCOTT
No. C11881
Ren. 06/21
STATE OF CALIFORNIA

FASHION PARK APARTMENTS
234, 251 & 257 FASHION PARK
OXNARD, CA, 93036

CITY OF OXNARD HOUSING AUTHORITY
435 S. D STREET
OXNARD, CALIFORNIA 93030

THESE DRAWINGS AND SPECIFICATIONS ARE THE PROPERTY AND COPYRIGHT OF LAUTERBACH & ASSOCIATES. ALL RIGHTS RESERVED, AND SHALL NOT BE USED ON ANY OTHER WORK OR PROJECT EXCEPT BY WRITTEN AGREEMENT WITH LAUTERBACH & ASSOCIATES. WRITTEN DIMENSIONS SHALL TAKE PRECEDENCE OVER SCALED DIMENSIONS AND SHALL BE VERIFIED ON THE JOB SITE. ANY DISCREPANCY SHALL BE BROUGHT TO THE NOTICE OF LAUTERBACH & ASSOCIATES PRIOR TO COMMENCEMENT OF ANY WORK.

File Path

ELECTRICAL DEMOLITION NOTES

1. ON WALLS TO BE REMOVED, REMOVE ALL CONDUIT, WIRE, BOXES, FITTINGS + DEVICES COMPLETE.
2. WHERE REMOVED DEVICES SERVE DOWNSTREAM ONES TO REMAIN, RECONNECT THESE.

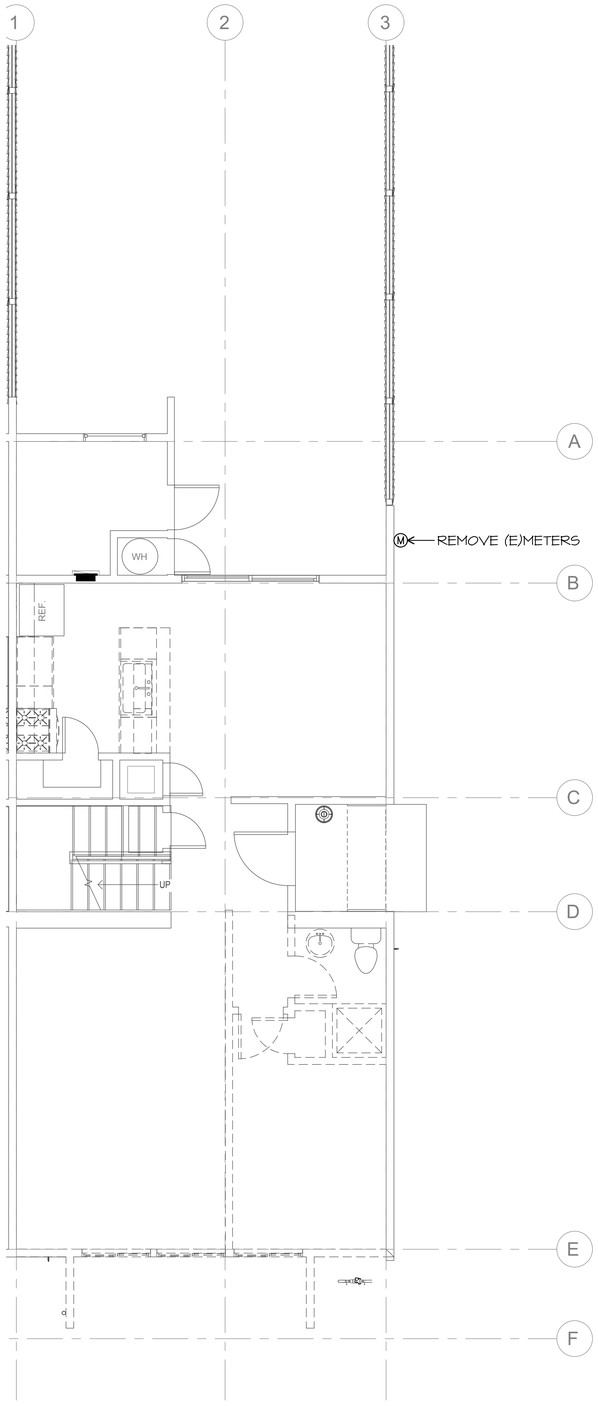

1 FIRST FLOOR DEMOLITION PLAN

SCALE: 1/4" = 1'-0"

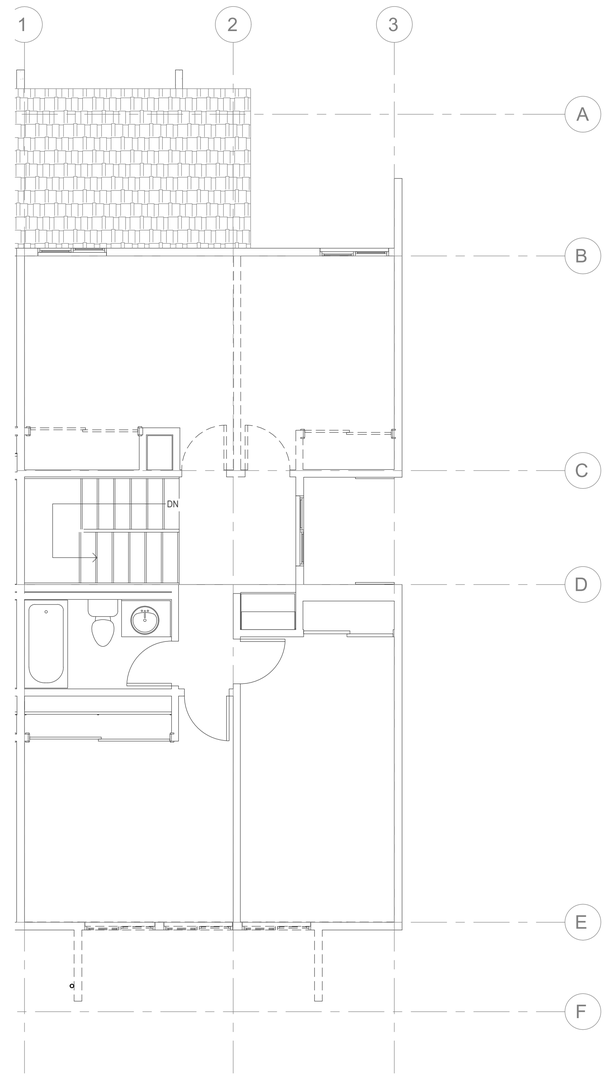

2 SECOND FLOOR DEMOLITION PLAN

SCALE: 1/4" = 1'-0"

JMPE
ELECTRICAL ENGINEERING
LIGHTING DESIGN
CA REGISTRATION NO E13083
19531
627 OLIVE STREET
SANTA BARBARA CA 93101
(805) 569-9216
FAX (805) 569-2405
email : maloney@jmpe.net
www.jmpe.net

LICENSED PROFESSIONAL ENGINEER
JOHN MALONEY
E013083
EXP. 06/30/2021
ELECTRICAL
STATE OF CALIFORNIA

Project Architect
LAUTERBACH & ASSOCIATES
ARCHITECTS INC.
David C. Kesterson, Architect • Ilona Scott, Architect • Mark S. Pettit, Architect
300 MONTGOMERY AVENUE, OXNARD, CALIFORNIA 93036 | 805-988-0912 | FAX 805-981-4510 | www.la-arch.com

LICENSED ARCHITECT
ILONA SCOTT
No. C11881
Ren. 06/21
STATE OF CALIFORNIA

FASHION PARK APARTMENTS

234, 251 & 257 FASHION PARK
OXNARD, CA, 93036

CITY OF OXNARD HOUSING AUTHORITY

435 S. D STREET
OXNARD, CALIFORNIA 93030

NO	DESCRIPTION	DATE
1	SUBMIT	02-26-2020

ISSUE

JOB NO. 20-190209

DRAWN BY: -
CHECKED BY: -
PROJECT MANAGER: -
PRINT DATE:

ELECTRICAL DEMOLITION PLANS

E-101

THESE DRAWINGS AND SPECIFICATIONS ARE THE PROPERTY AND COPYRIGHT OF LAUTERBACH & ASSOCIATES, ALL RIGHTS RESERVED, AND SHALL NOT BE USED ON ANY OTHER WORK OR PROJECT EXCEPT BY WRITTEN AGREEMENT WITH LAUTERBACH & ASSOCIATES. WRITTEN DIMENSIONS SHALL TAKE PRECEDENCE OVER SCALED DIMENSIONS AND SHALL BE VERIFIED ON THE JOB SITE. ANY DISCREPANCY SHALL BE BROUGHT TO THE NOTICE OF LAUTERBACH & ASSOCIATES PRIOR TO COMMENCEMENT OF ANY WORK.

File Path

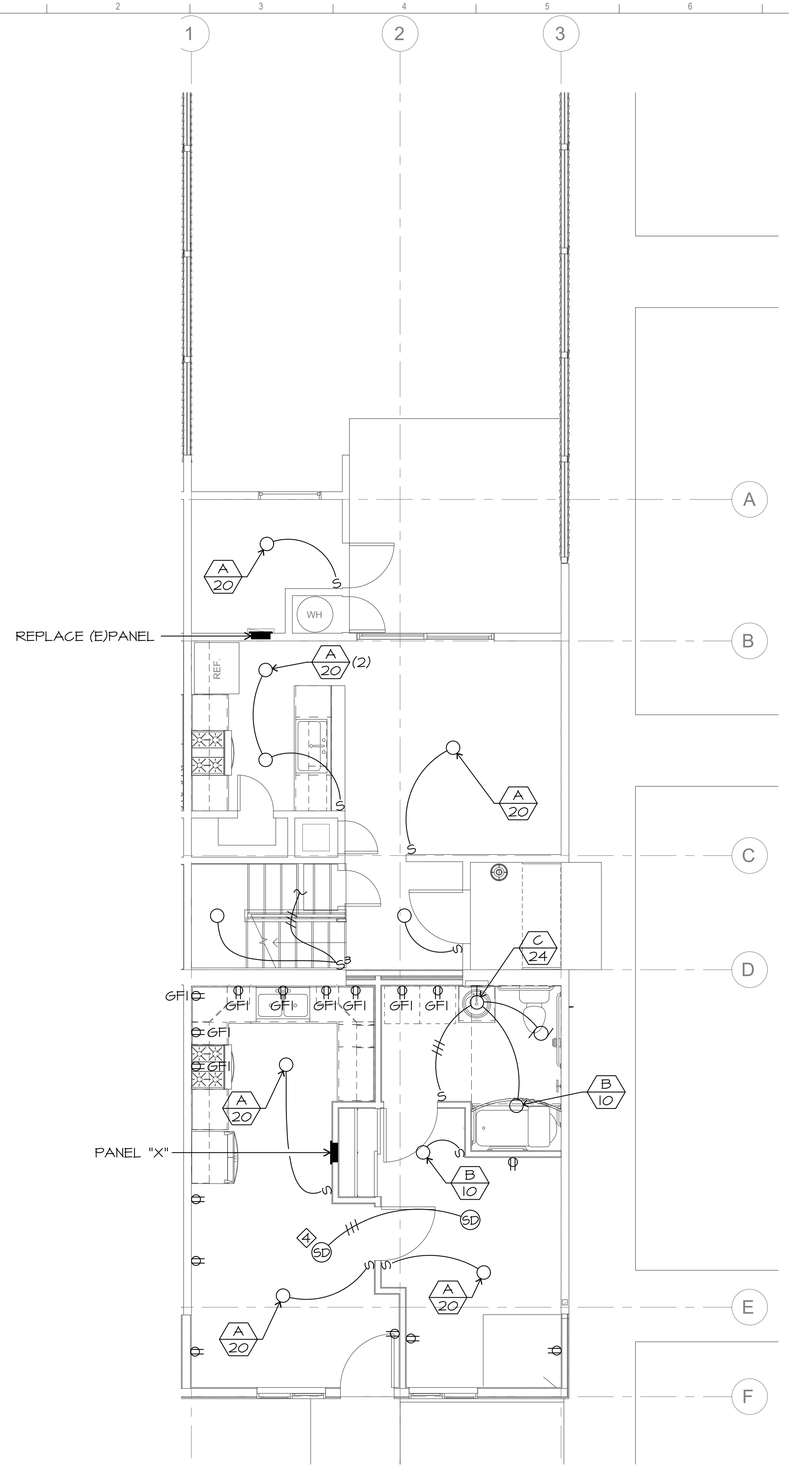

1 FIRST FLOOR DEMOLITION PLAN

SCALE: 1/4" = 1'-0"

ELECTRICAL NOTES

1. ALL OUTLETS IN DWELLING UNITS SHALL BE PROTECTED BY A LISTED ARC FAULT CIRCUIT INTERRUPTER, COMBINATION TYPE PER CEC 210.12
2. TAMPER RESISTANCE RECEPTACLE SHALL BE INSTALLED IN DWELLING UNITS PER CEC 406.11
3. SMOKE DETECTORS SHALL BE 120V, INTERCONNECTED, PHOTOELECTRIC/ION UNITS WITH BATTERY BACK UP

4. HALLWAY DETECTORS SHALL BE COMBINATION SMOKE AND CARBON MONOXIDE DETECTOR. PART #KIDDE KN-COSM-BA

5. VERIFY LOCATION OF FLUSH FLOOR RECEPTACLE PRIOR TO ROUGH IN

6. VACANCY SENSOR SWITCH SENSOR SWITCH #WSD-PDT-WH

7. LIGHTS MASTER SWITCH

8. 2 POLE VACANCY SENSOR SWITCH SENSOR SWITCH #WSD-2P-PDT-WH FAN

9. RESIDENCE SHALL BE PROTECTED BY APPROVED FIRE WARNING SYSTEM PER NFPA 72

10. EXHAUST FAN WITH MOTION & HUMIDITY CONTROL

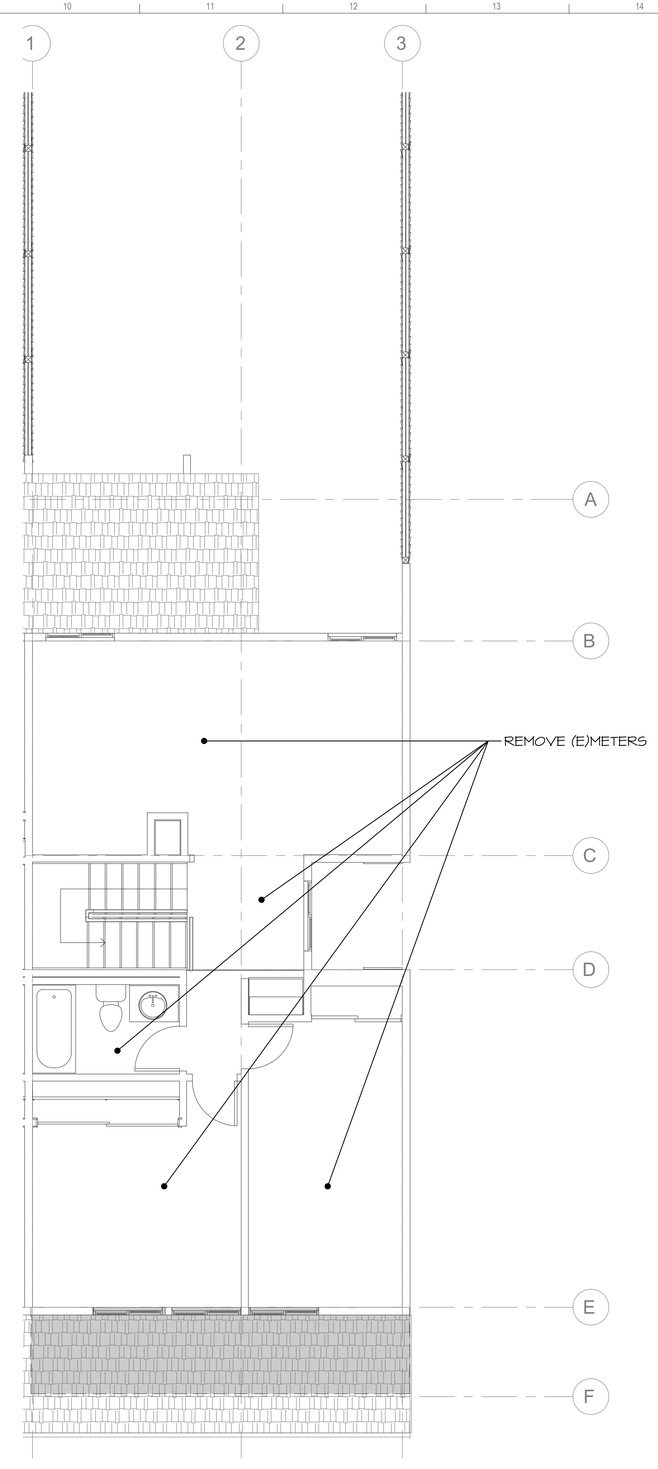

2 SECOND FLOOR DEMOLITION PLAN

SCALE: 1/4" = 1'-0"

JMPE
ELECTRICAL ENGINEERING
LIGHTING DESIGN
CA REGISTRATION NO E13083
19531
627 OLIVE STREET
SANTA BARBARA CA 93101
(805) 569-9216
FAX (805) 569-2405
email : maloney@jmpe.net
www.jmpe.net

LICENSED PROFESSIONAL ENGINEER
MICHAEL J. MALONEY
E013083
EXP. 06/30/2021
ELECTRICAL
STATE OF CALIFORNIA

NO	DESCRIPTION	DATE
1	SUBMIT	02-26-2020

ISSUE

JOB NO. 20-190209

DRAWN BY: -
CHECKED BY: -
PROJECT MANAGER: -
PRINT DATE:

ELECTRICAL FLOOR PLANS

E-103

Project Architect
LAUTERBACH & ASSOCIATES
ARCHITECTS INC.
David C. Kesterson, Architect • Ilona Scott, Architect • Mark S. Pettit, Architect
300 MONTGOMERY AVENUE, OXNARD, CALIFORNIA 93036 | 805-988-0912 | FAX 805-981-4510 | www.la-arch.com

LICENSED ARCHITECT
ILONA SCOTT
No. C11881
Ren. 06/21
STATE OF CALIFORNIA

FASHION PARK APARTMENTS
234, 251 & 257 FASHION PARK
OXNARD, CA, 93036

CITY OF OXNARD HOUSING AUTHORITY
435 S. D STREET
OXNARD, CALIFORNIA 93030

THESE DRAWINGS AND SPECIFICATIONS ARE THE PROPERTY AND COPYRIGHT OF LAUTERBACH & ASSOCIATES. ALL RIGHTS RESERVED, AND SHALL NOT BE USED ON ANY OTHER WORK OR PROJECT EXCEPT BY WRITTEN AGREEMENT WITH LAUTERBACH & ASSOCIATES. WRITTEN DIMENSIONS SHALL TAKE PRECEDENCE OVER SCALED DIMENSIONS AND SHALL BE VERIFIED ON THE JOB SITE. ANY DISCREPANCY SHALL BE BROUGHT TO THE NOTICE OF LAUTERBACH & ASSOCIATES PRIOR TO COMMENCEMENT OF ANY WORK.

File Path

CAPITAL IMPROVEMENT CONTRACT

Contract No: **A-8533**
Name of Contractor: MDJ Management
Address: 531 Main Street, #611, El Segundo, CA 90245

Project description: Concord Drive Apartments ADA Conversion

This Capital Improvement Contract (**"Contract")** is made at Oxnard, California, as of this 19th day of September 2023 between the City of Oxnard Housing Authority, called herein the **"Authority"**, and the above-named contractor (**"Contractor"**) for the construction of the capital improvement project described herein. The parties hereto agree as follows:

I. Type of Contract

This contract is a firm-fixed price contract as defined by 2CFR Part 200 and the Department of Housing and Urban Development (HUD) Handbook 7460.8, Rev. 2.

2. Contract Price

Contractor shall perform the scope of work per the detailed scope of work per approved plans submitted for the ADA unit conversion at 2950 and 2956 Concord Drive. Authority shall pay Contractor, as described in **Exhibit A**, attached hereto and incorporated herein by this reference, in full payment for said work, the following sum: **$1,221,499.92**

The above sum includes all taxes and the costs of any required bonds.

3. Payment Schedule

Authority shall pay Contractor no later than 30 calendar days after Authority accepts Contractor's invoices and Authority shall make final payment no later than 60 calendar days after Authority has issued and approved a certificate of completion for the work contemplated herein, provided that the Authority may withhold from progress payments an amount equal to 5 percent of the progress payment and may withhold from final payment an amount sufficient to protect the Authority from disputes equivalent to 150 percent of the value of any disputed amount of work.

4. Scope of Work

Contractor shall furnish all tools, equipment, apparatus, facilities, labor and materials necessary to, and shall perform and complete in a good, safe and workmanlike manner, the work described in the approved plans.

5. Contract Documents

The complete Contract consists of all the following, which are specifically incorporated herein by reference:

a. Change Orders
b. Contract Amendments –
c. This Contract
d. Amendments to HUD Form 5370
e. HUD Form 5370 General Conditions for Construction Contracts – Public Housing Programs
f. Specifications
g. Plans
h. Permits
i. Contractor's bid proposal and list of subcontractors (if applicable).
j. Performance and payment bonds as required by the specifications and applicable law. Unless otherwise specified, each such bond shall be 100 percent of the Contract price.
k. Insurance as required by the specifications and applicable law.
l. All applicable wage determinations, safety and health regulations, non-discrimination provisions, labor standards, and requirements if the Contract is federally assisted. This includes but is not limited to such items enumerated in the specifications and addenda thereto.

6. Indemnity

Contractor agrees to indemnify, hold harmless and defend Authority, its Commission, and each member thereof, and every officer, employee, representative or agent of Authority, from any and all liability, claims, demands, actions, damages (whether in contract or tort, including personal injury, death at any time, or property damage), costs and financial loss, including all costs and expenses and fees of litigation or arbitration, that arise directly or indirectly form any acts or omissions related to this Agreement performed by Contractor or its agents, employees, Subcontractors, Contractors, and other persons acting on Contractor's behalf. This agreement to indemnify, hold harmless and defend shall apply whether such acts or omissions are the product of active negligence, passive negligence, willfulness or acts for which Contractor or its agents, employees, subcontractors, consultants and other persons acting on Contractor's behalf would be held strictly liable.

7. Time for Performance

The time limit for the completion of the work is **540 working days** after receipt of the Notice to Proceed.

Contractor shall not perform any work until the Authority issues a Notice to Proceed. Work will be completed within the time limit specified above and in the Notice to Proceed.

8. Acknowledgement

Contractor by signing hereunder acknowledges that he has reviewed all the foregoing documents and agrees with the requirements, conditions and covenants contained therein.

The parties agree that this Agreement may be transmitted and signed by electronic or digital means by either/any or both/all Parties and that such signatures shall have the same force and effect as original signatures, in accordance with California Government Code Section 16.5 and California Civil Code Section 1633.7.

CITY OF OXNARD
HOUSING AUTHORITY

_____
John C. Zaragoza
Chairman

MDJ MANAGEMENT

_____
Matthew McMillon
President

APPROVED AS TO FORM:

_____
Stephen M. Fischer,
Housing General Counsel

APPROVED AS TO INSURANCE:

_____
Rhonda Hodge
Housing Finance Officer

APPROVED AS TO COMPLIANCE:

_____
Rhonda Hodge
Contract Administrator

GENERAL CONDITIONS

Work Hours:

From 8:00 AM to 5:00 PM max. Including 1-hour lunch.
No work is allowed Saturdays, Sundays and during any official holidays.

Safety and Security:
The contractors are required to secure the work area during the work hours, lunch hours, weekends, and holidays. The contractors shall secure and render safe the entire construction area at the end of each working day. Work areas must be well barricaded and flagged, and all precautions should be taken to avoid injury or damage to any person or property and shall protect and indemnify the Housing against any claim or liability arising from or based on the lack of proper safeguards or negligence whether by it or its agents, employees or Subcontractors.

Compliance with all Laws:
The contractors shall comply with all applicable federal, State and local laws, ordinances, codes and regulations in force at the time the contractors perform pursuant to the contract documents.

Project Schedule:
The contractor is expected to complete the job in not to exceed five hundred forty **(540) working days**.

Construction Debris:
Due to the nature of the job, the contractor is responsible for hauling away debris.

Storage Bin
The contractor shall provide bins and/or containers for temporary storage.

Warranty:
The contractor shall warranty the work for a period of **One (1) year** against workmanship.

Final Walkthrough, and Sign off:
The contractor is required to call for a final walk through with the project manager and/ or the Housing Authority staff after completion of the project. Upon approval, the contractor may bill the Housing Authority for said work. All the payments will be pending obtaining a final sign off from the City inspector and turning in those permits.

EXHIBIT A

GORDIAN®

Work Order Signature Document

EZIQC Contract No.: CA-R7-GB06-123021-MDJ

[X] **New Work Order** [ ] **Modify an Existing Work Order**

Work Order Number.:	116759.00	Work Order Date:	06/06/2023
Work Order Title:	Concord Unit 2950 Conversion		
Owner Name:	Oxnard Housing Authority	Contractor Name:	MDJ Management
Contact:	Fredi Contreras	Contact:	Matt McMillon
Phone:	805-890-8319	Phone:	310-490-1521

Work to be Performed

Work to be performed as per the Final Detailed Scope of Work Attached and as per the terms and conditions of Sourcewell EZIQC Contract No CA-R7-GB06-123021-MDJ.

Brief Work Order Description:

Time of Performance Estimated Start Date:

Estimated Completion Date:

Liquidated Damages Will apply: [ ] Will not apply: [X]

Work Order Firm Fixed Price: $610,749.96

Owner Purchase Order Number:

Approvals

Oxnard Housing Authority Date

MDJ Management Date

Detailed Scope of Work

To: Matt McMillon
MDJ Management
531 Main St #611
El Segundo, CA 90245
310-490-1521

From: Fredi Contreras
Oxnard Housing Authority
300 N. Marquita Street
Oxnard, CA 93030
805-890-8319

Date Printed: June 06, 2023

Work Order Number: 116759.00

Work Order Title: Concord Unit 2950 Conversion

Brief Scope:

☐ **Preliminary** ☐ **Revised** [X] **Final**

The following items detail the scope of work as discussed at the site. All requirements necessary to accomplish the items set forth below shall be considered part of this scope of work.

See attached.

Subject to the terms and conditions of ezIQC Contract **CA-R7-GB06-123021-MDJ**.

MDJ Management _____ Date _____

Oxnard Housing Authority _____ Date _____

MDJ Management, LLC
License # 1044711
DIR # 1000061313
531 Main St. #611 El Segundo CA 90245
310-490-1521

Job Name: 2950 Concord ADA Conversion
Location: 2950 Concord Dr. Oxnard, CA 93036
Customer: Oxnard Housing Authority

Submission Date: 5/31/23

Detailed Scope of Work

Demolition

- Demolition of existing apartment per plans
- Per Asbestos Survey report provided by client all walls, ceilings and floors to be considered ACM
    - Demolition of unit to be performed by certified hazardous material demolition company

Installation/Buildout

- Saw cutting of slab and demolition of concrete for new plumbing
- Excavation for new plumbing and new concrete footings for addition
- All framing throughout including new walls and soffits
- New rough and finish plumbing throughout
- New electrical rough including new panel per plan
- Concrete work:
    - Pour new footings for addition
    - Pour back all open trenches inside the unit
    - Pour slab for addition
    - Our sidewalk as required
- New windows and doors
- New Insulation
- HVAC ductwork, registers, and wall heaters.
    - Includes new forced air unit
- Drywall throughout
- Lath, stucco, and color coat to match existing
- Roofing, fascia, and gutters for new addition
- Interior paint
- New Flooring and base
- New kitchens, countertops, fixtures, sinks and appliances.

- New bathroom fixtures per plan
- Paint exterior of building
- Site work:
    - New sidewalks
    - Handicap ramp with truncated domes
    - Handicap striping
    - New signage at Handicap stall

Installation/Buildout added by Client NOT included on plans

- Remove and replace all outlets and switches throughout, even on all existing walls
- Remove and replace exterior lighting with LED lighting
    - Match existing 3 fixtures
- Install MDF baseboards
    - Instead of called out cove base
- Remove and replace all interior doors. Complete list of doors from plans as well as clients request:
    - Demo of 3 utility closet, 2 sliding closet, 5 bedroom, and 2 bathroom doors
    - Installation of 2 utility closet, 3 sliding closet, 3 bedroom, 2 bathroom doors, and 1 front door
- Clean up existing back yard, the weeds are 5 feet high
    - Includes weed weed whacking and removal of all dead weeds
- Remove and replace one section of vinyl fence because it is not wide enough for ADA width along concrete path to front door
    - 45 feet x 6 feet high
    - (1) One 4' Gate
    - Includes widening the concrete by one foot

Notes:

- All work to be performed per plans provided to MDJ
- Any additional add on items will be at the request of Customer. Any adjustment shall be an additional cost.
- Price includes all labor (**Normal Working Hours - Davis Bacon Wages**), materials, equipment to complete this scope of work.
- Construction Exclusions:
    - New Washer and Dryer not included in contract.

CLARIFICATIONS AND EXCLUSIONS:

- Warranty
    - One year warranty against workmanship
    - Manufacturer's warranty varies
- We exclude plans, permits, permit fees, related fees, testing, inspection, survey, and engineering unless specified above
- We exclude utilities and hazardous or contaminated material.
- Construction water, power, and sanitary facilities available on site for MDJ's use at no cost.
- We exclude premium time.
- We exclude anything not specifically mentioned above.
- MDJ reserves the right to review, change, and/or delete any provisions of any prime contract or subcontract, which results from this quotation.

- All terms to be net 30 days in full upon receipt of invoice. Interest will be charged at the rate of 2% monthly on the unpaid balance.

BID PRICE: See Price Proposal

All work to be completed in a substantial and workmanlike manner according to standard practices for the sum of **See Price Proposal.** Any additional add on items will be at the request of Customer. Any adjustment shall be an additional cost.

Bid price is good for thirty (30) days only.

Any controversy or claim based on, arising out of, or relating to this agreement, or breach thereof, including any claim based on the work performed pursuant to this agreement, shall be submitted to the American Arbitration Association for binding arbitration in accordance with its rules. If any arbitration, legal action is brought to enforce this agreement, or arising out of or relating to the agreement, the prevailing party shall be entitled to recover from the non-prevailing party reasonable attorney fees and costs incurred, in addition to any and all other relief to which that party may be entitled.

Submitted by:

Matthew McMillon
President MDJ
310.490.1521
matt@buildwithmdj.com

Contractor's Price Proposal - Summary

Date: June 06, 2023

Re:

IQC Master Contract #:	CA-R7-GB06-123021-MDJ
Work Order #:	116759.00
Owner PO #:	
Title:	Concord Unit 2950 Conversion
Contractor:	MDJ Management
Proposal Value:	$610,749.96

Section - 01	**$27,922.15**
Section - 02	**$124,779.67**
Section - 03	**$44,628.54**
Section - 06	**$30,807.26**
Section - 07	**$39,946.76**
Section - 08	**$16,937.65**
Section - 09	**$136,489.60**
Section - 10	**$1,650.96**
Section - 11	**$6,131.21**
Section - 12	**$7,227.87**
Section - 22	**$61,651.38**
Section - 23	**$30,704.85**
Section - 26	**$57,035.70**
Section - 31	**$17,571.02**
Section - 32	**$7,265.34**
Proposal Total	**$610,749.96**

Thisl total represents the correct total for the proposal. Any discrepancy between line totals, sub-totals and the proposal total is due to rounding.

The Percentage of NPP on this Proposal: %

Contractor's Price Proposal - Detail

Date: June 06, 2023

Re:

IQC Master Contract #:	CA-R7-GB06-123021-MDJ
Work Order #:	116759.00
Owner PO #:	
Title:	Concord Unit 2950 Conversion
Contractor:	MDJ Management
Proposal Value:	$610,749.96

	Sect.	Item	Mod.	UOM	Description	Line Total
Labor	Equip.	Material	(Excludes)			

Section - 01

1	01 22 16	00 0002		EA	Reimbursable FeesReimbursable Fees will be paid to the contractor for eligible costs as directed by Owner. Insert the appropriate quantity to adjust the base cost to the actual Reimbursable Fee. If there are multiple Reimbursable Fees, list each one separately and add a comment in the "note" block to identify the Reimbursable Fee (e.g. sidewalk closure, road cut, various permits, extended warranty, expedited shipping costs, etc.). A copy of each receipt shall be submitted with the Price Proposal.	$13,147.20

	Quantity		Unit Price		Factor		Total
Installation	11,952.00	x	1.00	x	1.1000	=	13,147.20

Bond = $597,602 x 2%

2	01 74 19	00 0016		EA	40 CY Dumpster (5 Ton) "Construction Debris"Includes delivery of dumpster, rental cost, pick-up cost, hauling, and disposal fee. Non-hazardous material.	$11,002.63

	Quantity		Unit Price		Factor		Total
Installation	12.00	x	809.97	x	1.1320	=	11,002.63

10 dumpsters for abatement debris: cabinets, drywall from entire house, shower, toilet, stucco, insulation, ...
2 dumpsters for construction debris: drywall cuts, lumber cuts, basic trash

3	01 74 19	00 0019		EA	15 CY Low-Boy Dumpster Mixed RecyclableFor mixed dirt, rock, concrete brick or asphalt with no trash or organics. Includes service to deliver and pick-up dumpster, hauling, rental and disposal fee.	$3,772.32

	Quantity		Unit Price		Factor		Total
Installation	4.00	x	833.11	x	1.1320	=	3,772.32

for removal of excavated soil for footings, slab, trenching

Subtotal for Section - 01 **$27,922.15**

Section - 02

4	02 41 19	13 0063		LF	Rod Reinforced Concrete Slab Up To 4" Depth, Saw Cut	$2,499.46

	Quantity		Unit Price		Factor		Total
Installation	400.00	x	5.52	x	1.1320	=	2,499.46

sawcut existing slab to trench for new electrical and plumbing runs as needed per plans

5	02 82 33	00 0067		SF	>2,500 To 10,000 SF, Single Layer Gypsum Wall Board, Asbestos Abatement And Disposal	$62,951.52

	Quantity		Unit Price		Factor		Total
Installation	6,684.00	x	8.32	x	1.1320	=	62,951.52

demolition throughout. All drywall mud is hot. ceilings and walls

6	02 82 33	00 0074		SF	>500 To 2,500 SF, Gypsum Wall Board (Or Backer Board) With Ceramic Tile And Mastic, Asbestos Abatement And Disposal	$12,439.55

	Quantity		Unit Price		Factor		Total
Installation	550.00	x	19.98	x	1.1320	=	12,439.55

demolition of bathrooms tile and backer board walls and floor as well as kitchen tile

7	02 82 33	00 0087		SF	>500 To 2,500 SF, Spray On Acoustical Ceiling, Asbestos Abatement And Disposal	$16,659.92

	Quantity		Unit Price		Factor		Total
Installation	1,564.00	x	9.41	x	1.1320	=	16,659.92

demolition

Contractor's Price Proposal - Detail Continues..

Work Order Number: 116759.00
Work Order Title: Concord Unit 2950 Conversion

Section - 02

8	02 82 33 00 0101		SF	>500 To 2,500 SF, Single Layer Or First Of Multiple Layers, Floor Tile, Asbestos Abatement And Disposal									$10,959.07
			Installation	Quantity 1,564.00	x	Unit Price 6.19	x	Factor 1.1320	=	Total 10,959.07			
			demolition of 2 layers of floor tile										
9	02 82 33 00 0101	0001		For Each Additional Layer, Add									$2,744.19
			Installation	Quantity 1,564.00	x	Unit Price 1.55	x	Factor 1.1320	=	Total 2,744.19			
10	02 82 33 00 0245		CF	>100 To 250 CF, Asbestos Contaminated Debris, Asbestos Abatement And Disposal									$13,881.15
			Installation	Quantity 250.00	x	Unit Price 49.05	x	Factor 1.1320	=	Total 13,881.15			
			demolition of all cabinets and vanities per plans. They are attached to the walls so removal would disturb drywall material that is hot. This is for kitchen and bathroom										
11	02 82 33 00 0333		SF	High Efficiency Particulate Air (HEPA) Vacuum And Cleaning Of Contaminated Area									$1,186.20
			Installation	Quantity 1,564.00	x	Unit Price 0.67	x	Factor 1.1320	=	Total 1,186.20			
			demolition part of abatement procedures										
12	02 89 00 00 0021		EA	3 Stage Portable Personnel Decontamination Wash FacilityIncludes connection to negative air system.									$907.07
			Installation	Quantity 1.00	x	Unit Price 801.30	x	Factor 1.1320	=	Total 907.07			
			demolition part of abatement procedures										
13	02 89 00 00 0023		EA	Portable Waste Decontamination UnitIncludes connection to negative air system.									$551.54
			Installation	Quantity 1.00	x	Unit Price 487.23	x	Factor 1.1320	=	Total 551.54			
			demolition										

Subtotal for Section - 02 **$124,779.67**

Section - 03

14	03 11 13 00 0003		SF	Continuous Footings Foundation Wood Formwork									$1,882.74
			Installation	Quantity 240.00	x	Unit Price 6.93	x	Factor 1.1320	=	Total 1,882.74			
			footing for new addition										
15	03 11 13 00 0003	0001		For <1,000, Add									$350.47
			Installation	Quantity 240.00	x	Unit Price 1.29	x	Factor 1.1320	=	Total 350.47			
16	03 11 13 00 0009		LF	Up To 6" High Slab Edge and Block-Out Wood Formwork									$699.89
			Installation	Quantity 116.00	x	Unit Price 5.33	x	Factor 1.1320	=	Total 699.89			
			for new addition										
17	03 11 13 00 0009	0004		For Up To 250, Add									$69.28
			Installation	Quantity 60.00	x	Unit Price 1.02	x	Factor 1.1320	=	Total 69.28			
18	03 21 11 00 0251		EA	Dowels Or Hairpin, 1/2" x 30" Length, Drilled And Epoxy In Concrete, 6" Embedment									$5,682.36
			Installation	Quantity 225.00	x	Unit Price 22.31	x	Factor 1.1320	=	Total 5,682.36			
			200 LF of trenching. Epoxy and Dowel every 2'. One on each side. For reinforcement and tying into existing slab adjacent. 25 dowels to attach from porch sidewalk to existing .										

Contractor's Price Proposal - Detail Continues..

Work Order Number: 116759.00
Work Order Title: Concord Unit 2950 Conversion

Section - 03

19	03 21 13 00 0093		LF	#6, Grade 50, Slab On Grade, Galvanized Steel Reinforcement Bar								$2,010.43
					Quantity		Unit Price		Factor		Total	
				Installation	800.00	x	2.22	x	1.1320	=	2,010.43	
				200 LF of trenching and 600 LF for slab, porch, and footings. Installation of rebar every 2'.								
20	03 30 53 00 0007		CF	Hand Mix And Place ConcreteFor use where conventional equipment access is limited or when directed by the owner.								$6,592.77
					Quantity		Unit Price		Factor		Total	
				Installation	200.00	x	29.12	x	1.1320	=	6,592.77	
				patch back trenching in existing slab								
21	03 31 13 00 0003		SF	4" 3,000 PSI Slab On Grade Concrete Slabs Assembly								$1,768.18
					Quantity		Unit Price		Factor		Total	
				Installation	200.00	x	7.81	x	1.1320	=	1,768.18	
				for new addition								
22	03 31 13 00 0003	0156		For Up To 500, Add								$681.46
					Quantity		Unit Price		Factor		Total	
				Installation	200.00	x	3.01	x	1.1320	=	681.46	
23	03 31 13 00 0023		CY	Concrete Pump, Place 3,000 PSI Concrete Spread FootingsExcludes pumping equipment.								$14,833.73
					Quantity		Unit Price		Factor		Total	
				Installation	50.00	x	262.08	x	1.1320	=	14,833.73	
				24 CY footing for new addition. 26 CY for Front porch/sloped walk								
24	03 31 13 00 0023	0040		For >20 To 50, Add								$638.45
					Quantity		Unit Price		Factor		Total	
				Installation	50.00	x	11.28	x	1.1320	=	638.45	
25	03 54 16 00 0005		SF	1/2" Thick Self Leveling Cementitious Underlayment For FloorsIncluding Surface Preparation								$9,418.78
					Quantity		Unit Price		Factor		Total	
				Installation	1,564.00	x	5.32	x	1.1320	=	9,418.78	
				self leveling of floors for prior to installation of new vinyl plank flooring								

Subtotal for Section - 03 **$44,628.54**

Section - 06

26	06 11 16 00 0061		SF	2" x 4" Wood Wall Framing At 16" On Center								$2,351.16
					Quantity		Unit Price		Factor		Total	
				Installation	950.00	x	1.58	x	1.1320	=	1,699.13	
				Demolition	800.00	x	0.72	x	1.1320	=	652.03	
				for new walls, new addition, and soffits. Couple walls require double stacked 2x4 staggered A-602								
27	06 11 16 00 0062		SF	2" x 6" Wood Wall Framing At 16" On Center								$616.94
					Quantity		Unit Price		Factor		Total	
				Installation	250.00	x	2.18	x	1.1320	=	616.94	
				2x6 wall per plans								
28	06 11 16 00 0062	0004		For >200 To 500, Add								$101.88
					Quantity		Unit Price		Factor		Total	
				Installation	250.00	x	0.36	x	1.1320	=	101.88	
29	06 11 16 00 0063		SF	2" x 8" Wood Wall Framing At 16" On Center								$263.53
					Quantity		Unit Price		Factor		Total	
				Installation	80.00	x	2.91	x	1.1320	=	263.53	
				2x8 wall per plans								

Contractor's Price Proposal - Detail Continues..

Work Order Number: 116759.00
Work Order Title: Concord Unit 2950 Conversion

Section - 06

30	06 11 16 00 0063	0003		For Up To 200, Add									$86.94
			Installation		Quantity 80.00	x	Unit Price 0.96	x	Factor 1.1320	=	Total 86.94		
31	06 11 16 00 0179		LF	2" x 4" Pressure Treated Lumber, For Roofing Nailers									$871.64
			Installation		Quantity 250.00	x	Unit Price 3.08	x	Factor 1.1320	=	Total 871.64		
			for roof framing										
32	06 11 16 00 0183		LF	2" x 4" Pressure Treated Lumber, For Roofing Sleepers									$464.12
			Installation		Quantity 250.00	x	Unit Price 1.64	x	Factor 1.1320	=	Total 464.12		
			for roof framing										
33	06 16 33 00 0006		SF	3/4" Thick CDX Plywood Roof DeckingApplied to wood rafters.									$690.52
			Installation		Quantity 250.00	x	Unit Price 2.44	x	Factor 1.1320	=	Total 690.52		
			for new addition roof										
34	06 16 33 00 0006	0040		For Tongue And Groove, Add									$19.81
			Installation		Quantity 250.00	x	Unit Price 0.07	x	Factor 1.1320	=	Total 19.81		
35	06 16 33 00 0012		SF	1/2" Interior BC Plywood Wall SheathingApplied to wall studs.									$1,036.91
			Installation		Quantity 400.00	x	Unit Price 2.29	x	Factor 1.1320	=	Total 1,036.91		
			for new addition per plans										
36	06 16 33 00 0012	0005		For Shear Wall Construction, Add									$135.84
			Installation		Quantity 400.00	x	Unit Price 0.30	x	Factor 1.1320	=	Total 135.84		
37	06 16 33 00 0012	0006		For Exterior CC Grade Plywood, Add									$54.34
			Installation		Quantity 400.00	x	Unit Price 0.12	x	Factor 1.1320	=	Total 54.34		
38	06 16 33 00 0020		SF	3/4" CD Grade Plywood Floor DeckingApplied to floor or joists.									$5,169.71
			Installation		Quantity 1,564.00	x	Unit Price 2.36	x	Factor 1.1320	=	Total 4,178.26		
			Demolition		1,564.00	x	0.56	x	1.1320	=	991.45		
			for new floor decking per plans FSI/A-602. plans require glue										
39	06 16 33 00 0020	0038		For Exterior Glue, Add									$1,593.40
			Installation		Quantity 15,640.00	x	Unit Price 0.09	x	Factor 1.1320	=	Total 1,593.40		
40	06 41 13 00 0225		EA	15" Wide, 35" High x 23-3/4" Deep, Single Drawer and Single Door, Solid Wood Face Frame, Thermofoil Door and Drawer Front, Base Cabinet									$736.43
			Installation		Quantity 2.00	x	Unit Price 325.28	x	Factor 1.1320	=	Total 736.43		
			demolition of 1 kitchen and installation of 2 new kitchen cabinets per plans										
41	06 41 13 00 0225	0126		For Solid Wood Drawers, Dovetail Joints And Full Extension Drawer Guides, Add									$231.72
			Installation		Quantity 2.00	x	Unit Price 102.35	x	Factor 1.1320	=	Total 231.72		
42	06 41 13 00 0225	0130		For All Plywood Box Construction, Add									$241.55
			Installation		Quantity 2.00	x	Unit Price 106.69	x	Factor 1.1320	=	Total 241.55		

Work Order Number: 116759.00
Work Order Title: Concord Unit 2950 Conversion

Section - 06

43	06 41 13 00 0226		EA	18" Wide, 35" High x 23-3/4" Deep, Single Drawer and Single Door, Solid Wood Face Frame, Thermofoil Door and Drawer Front, Base Cabinet									$770.08
			Installation	Quantity 2.00	x	Unit Price 340.14	x	Factor 1.1320	=	Total 770.08			
				demolition of 1 kitchen and installation of 2 new kitchen cabinets per plans									
44	06 41 13 00 0226	0126		For Solid Wood Drawers, Dovetail Joints And Full Extension Drawer Guides, Add									$231.72
			Installation	Quantity 2.00	x	Unit Price 102.35	x	Factor 1.1320	=	Total 231.72			
45	06 41 13 00 0226	0130		For All Plywood Box Construction, Add									$241.55
			Installation	Quantity 2.00	x	Unit Price 106.69	x	Factor 1.1320	=	Total 241.55			
46	06 41 13 00 0228		EA	24" Wide, 35" High x 23-3/4" Deep, Single Drawer and Single Door, Solid Wood Face Frame, Thermofoil Door and Drawer Front, Base Cabinet									$460.91
			Installation	Quantity 1.00	x	Unit Price 407.16	x	Factor 1.1320	=	Total 460.91			
				demolition of 1 kitchen and installation of 2 new kitchen cabinets per plans									
47	06 41 13 00 0228	0126		For Solid Wood Drawers, Dovetail Joints And Full Extension Drawer Guides, Add									$115.86
			Installation	Quantity 1.00	x	Unit Price 102.35	x	Factor 1.1320	=	Total 115.86			
48	06 41 13 00 0228	0130		For All Plywood Box Construction, Add									$120.77
			Installation	Quantity 1.00	x	Unit Price 106.69	x	Factor 1.1320	=	Total 120.77			
49	06 41 13 00 0231		EA	33" Wide, 35" High x 23-3/4" Deep, Single Drawer and Double Door, Solid Wood Face Frame, Thermofoil Door and Drawer Front, Base Cabinet									$1,098.81
			Installation	Quantity 2.00	x	Unit Price 485.34	x	Factor 1.1320	=	Total 1,098.81			
				demolition of 1 kitchen and installation of 2 new kitchen cabinets per plans									
50	06 41 13 00 0231	0126		For Solid Wood Drawers, Dovetail Joints And Full Extension Drawer Guides, Add									$231.72
			Installation	Quantity 2.00	x	Unit Price 102.35	x	Factor 1.1320	=	Total 231.72			
51	06 41 13 00 0231	0130		For All Plywood Box Construction, Add									$241.55
			Installation	Quantity 2.00	x	Unit Price 106.69	x	Factor 1.1320	=	Total 241.55			
52	06 41 13 00 0232		EA	36" Wide, 35" High x 23-3/4" Deep, Single Drawer and Double Door, Solid Wood Face Frame, Thermofoil Door and Drawer Front, Base Cabinet									$1,133.00
			Installation	Quantity 2.00	x	Unit Price 500.44	x	Factor 1.1320	=	Total 1,133.00			
				demolition of 1 kitchen and installation of 2 new kitchen cabinets per plans									
53	06 41 13 00 0232	0126		For Solid Wood Drawers, Dovetail Joints And Full Extension Drawer Guides, Add									$231.72
			Installation	Quantity 2.00	x	Unit Price 102.35	x	Factor 1.1320	=	Total 231.72			
54	06 41 13 00 0232	0130		For All Plywood Box Construction, Add									$241.55
			Installation	Quantity 2.00	x	Unit Price 106.69	x	Factor 1.1320	=	Total 241.55			
55	06 41 13 00 0248		EA	15" Wide, 35" High x 23-3/4" Deep, Four Drawer Base, Solid Wood Face Frame and Thermofoil Drawer Fronts, Base Cabinet									$881.74
			Installation	Quantity 2.00	x	Unit Price 389.46	x	Factor 1.1320	=	Total 881.74			
				demolition of 1 kitchen and installation of 2 new kitchen cabinets per plans									

Work Order Number: 116759.00
Work Order Title: Concord Unit 2950 Conversion

Section - 06

56	06 41 13 00 0248	0129		For Solid Wood Drawers, Dovetail Joints And Full Extension Drawer Guides, Add									$926.86
			Installation	Quantity		Unit Price		Factor		Total			
				2.00	x	409.39	x	1.1320	=	926.86			
57	06 41 13 00 0248	0130		For All Plywood Box Construction, Add									$241.55
			Installation	Quantity		Unit Price		Factor		Total			
				2.00	x	106.69	x	1.1320	=	241.55			
58	06 41 13 00 0258		EA	33" Wide, 12" High x 12" Deep, Double Door, Solid Wood Face Frame and Thermofoil Doors, Wall Cabinet									$331.44
			Installation	Quantity		Unit Price		Factor		Total			
				1.00	x	292.79	x	1.1320	=	331.44			
				demolition of 1 kitchen and installation of 2 new kitchen cabinets per plans									
59	06 41 13 00 0258	0131		For All Plywood Box Construction, Add									$64.81
			Installation	Quantity		Unit Price		Factor		Total			
				1.00	x	57.25	x	1.1320	=	64.81			
60	06 41 13 00 0259		EA	36" Wide, 12" High x 12" Deep, Double Door, Solid Wood Face Frame and Thermofoil Doors, Wall Cabinet									$365.34
			Installation	Quantity		Unit Price		Factor		Total			
				1.00	x	322.74	x	1.1320	=	365.34			
				demolition of 1 kitchen and installation of 2 new kitchen cabinets per plans									
61	06 41 13 00 0259	0131		For All Plywood Box Construction, Add									$64.81
			Installation	Quantity		Unit Price		Factor		Total			
				1.00	x	57.25	x	1.1320	=	64.81			
62	06 41 13 00 0278		EA	30" Wide, 18" High x 12" Deep, Double Doors, Solid Wood Face Frame and Thermofoil Doors, Wall Cabinet									$722.69
			Installation	Quantity		Unit Price		Factor		Total			
				2.00	x	319.21	x	1.1320	=	722.69			
				demolition of 1 kitchen and installation of 2 new kitchen cabinets per plans									
63	06 41 13 00 0278	0131		For All Plywood Box Construction, Add									$129.61
			Installation	Quantity		Unit Price		Factor		Total			
				2.00	x	57.25	x	1.1320	=	129.61			
64	06 41 13 00 0282		EA	12" Wide, 30" High x 12" Deep, Single Door, Solid Wood Face Frame and Thermofoil Door, Wall Cabinet									$597.90
			Installation	Quantity		Unit Price		Factor		Total			
				2.00	x	264.09	x	1.1320	=	597.90			
				demolition of 1 kitchen and installation of 2 new kitchen cabinets per plans									
65	06 41 13 00 0282	0131		For All Plywood Box Construction, Add									$129.61
			Installation	Quantity		Unit Price		Factor		Total			
				2.00	x	57.25	x	1.1320	=	129.61			
66	06 41 13 00 0283		EA	15" Wide, 30" High x 12" Deep, Single Door, Solid Wood Face Frame and Thermofoil Door, Wall Cabinet									$325.62
			Installation	Quantity		Unit Price		Factor		Total			
				1.00	x	287.65	x	1.1320	=	325.62			
				demolition of 1 kitchen and installation of 2 new kitchen cabinets per plans									
67	06 41 13 00 0283	0131		For All Plywood Box Construction, Add									$64.81
			Installation	Quantity		Unit Price		Factor		Total			
				1.00	x	57.25	x	1.1320	=	64.81			
68	06 41 13 00 0283		EA	15" Wide, 30" High x 12" Deep, Single Door, Solid Wood Face Frame and Thermofoil Door, Wall Cabinet									$325.62
			Installation	Quantity		Unit Price		Factor		Total			
				1.00	x	287.65	x	1.1320	=	325.62			
				demolition of 1 kitchen and installation of 2 new kitchen cabinets per plans									

Contractor's Price Proposal - Detail Continues..

Work Order Number: 116759.00
Work Order Title: Concord Unit 2950 Conversion

Section - 06

69	06 41 13 00 0283	0131		For All Plywood Box Construction, Add								$64.81
			Installation	Quantity 1.00	x	Unit Price 57.25	x	Factor 1.1320	=	Total 64.81		
70	06 41 13 00 0284		EA	18" Wide, 30" High x 12" Deep, Single Door, Solid Wood Face Frame and Thermofoil Door, Wall Cabinet								$694.28
			Installation	Quantity 2.00	x	Unit Price 306.66	x	Factor 1.1320	=	Total 694.28		
				demolition of 1 kitchen and installation of 2 new kitchen cabinets per plans								
71	06 41 13 00 0284	0131		For All Plywood Box Construction, Add								$129.61
			Installation	Quantity 2.00	x	Unit Price 57.25	x	Factor 1.1320	=	Total 129.61		
72	06 41 13 00 0289		EA	33" Wide, 30" High x 12" Deep, Double Doors, Solid Wood Face Frame and Thermofoil Doors, Wall Cabinet								$974.72
			Installation	Quantity 2.00	x	Unit Price 430.53	x	Factor 1.1320	=	Total 974.72		
				demolition of 1 kitchen and installation of 2 new kitchen cabinets per plans								
73	06 41 13 00 0289	0131		For All Plywood Box Construction, Add								$129.61
			Installation	Quantity 2.00	x	Unit Price 57.25	x	Factor 1.1320	=	Total 129.61		
74	06 41 13 00 0329		EA	36" Wide, 84" High x 24" Deep, Four Doors, Solid Wood Face Frame and Thermofoil Doors, Pantry Cabinet								$1,462.41
			Installation	Quantity 1.00	x	Unit Price 1,291.88	x	Factor 1.1320	=	Total 1,462.41		
				demolition of 1 kitchen and installation of 2 new kitchen cabinets per plans								
75	06 41 13 00 0329	0132		For All Plywood Box Construction, Add								$239.58
			Installation	Quantity 1.00	x	Unit Price 211.64	x	Factor 1.1320	=	Total 239.58		
76	06 41 93 00 0007		EA	7" To 8-1/2", Flat Cabinet Pull Handle								$2,154.15
			Installation	Quantity 54.00	x	Unit Price 35.24	x	Factor 1.1320	=	Total 2,154.15		
				demolition of 1 kitchen and installation of 2 new kitchen cabinets per plans								

Subtotal for Section - 06 **$30,807.26**

Section - 07

77	07 21 16 00 0006		SF	5-1/2" Thick, Kraft Faced, R-21 Fiberglass Flexible Insulation								$19,505.18
				Quantity		Unit Price		Factor		Total		
			Installation	8,284.00	x	1.72	x	1.1320	=	16,129.28		
			Demolition	8,284.00	x	0.36	x	1.1320	=	3,375.90		
				removal of existing insulation and installation of new 6684 sqft of walls 1564 sqft of ceilings								
78	07 26 13 00 0010		CSF	Building Wrap (Tyvek)								$5,304.13
			Installation	Quantity 87.50	x	Unit Price 53.55	x	Factor 1.1320	=	Total 5,304.13		
				for new addition								
79	07 31 13 13 0004		SQ	230 LB/SQ, 5" Exposure, Three Tab Fiberglass Reinforced, Asphalt Composition Shingle (CertainTeed XT 30)								$7,409.79
			Installation	Quantity 25.00	x	Unit Price 261.83	x	Factor 1.1320	=	Total 7,409.79		
				new shingle roof for addition								

Work Order Number: 116759.00
Work Order Title: Concord Unit 2950 Conversion

Section - 07

80	07 34 00 00 0003		SQ	30 LB, Asphalt Saturated Organic Felt Roofing Underlayment, Mechanically Fastened								$1,416.70
			Installation	Quantity 25.00	x	Unit Price 50.06	x	Factor 1.1320	=	Total 1,416.70		
			new shingle roof for addition									
81	07 41 13 00 0026		LF	Eave Flashing For Aluminum Exposed Fastener Metal Roofing								$784.25
			Installation	Quantity 40.00	x	Unit Price 17.32	x	Factor 1.1320	=	Total 784.25		
			for new addition									
82	07 41 13 00 0026	0130		For Fluoropolymer (Kynar®) Coating, Add								$42.11
			Installation	Quantity 40.00	x	Unit Price 0.93	x	Factor 1.1320	=	Total 42.11		
83	07 62 13 00 0033		SF	22 Gauge, 0.034" Thick, Galvanized Steel Flashing								$4,149.91
			Installation	Quantity 300.00	x	Unit Price 12.22	x	Factor 1.1320	=	Total 4,149.91		
			flashing per plans for addition and 100 sqft for new windows									
84	07 62 13 00 0033	0080		For Wrap Around Window Panning, Add								$699.58
			Installation	Quantity 100.00	x	Unit Price 6.18	x	Factor 1.1320	=	Total 699.58		
85	07 71 23 00 0016		LF	6", 0.032" Thick, Box Style Aluminum Gutter								$429.88
			Installation	Quantity 25.00	x	Unit Price 15.19	x	Factor 1.1320	=	Total 429.88		
			rain gutter per plans									
86	07 71 23 00 0016	0322		For Up To 100', Add								$70.18
			Installation	Quantity 25.00	x	Unit Price 2.48	x	Factor 1.1320	=	Total 70.18		
87	07 71 23 00 0029		EA	6", Box Style Aluminum Gutter End Cap								$18.34
			Installation	Quantity 2.00	x	Unit Price 8.10	x	Factor 1.1320	=	Total 18.34		
			rain gutter per plans									
88	07 71 23 00 0055		LF	4" x 5", 0.019" Thick, Rectangular Aluminum Downspout								$102.67
			Installation	Quantity 10.00	x	Unit Price 9.07	x	Factor 1.1320	=	Total 102.67		
			rain gutter per plans									
89	07 71 23 00 0055	0325		For Up To 100', Add								$14.04
			Installation	Quantity 10.00	x	Unit Price 1.24	x	Factor 1.1320	=	Total 14.04		

Subtotal for Section - 07 **$39,946.76**

Section - 08

90	08 05 13 00 0041		EA	Factory Prepare Wood Door (Rated Or Non-Rated) For Mortise Lockset Hardware								$470.41
			Installation	Quantity 6.00	x	Unit Price 69.26	x	Factor 1.1320	=	Total 470.41		
			for all new doors. 1 front door, 2 bath, and 3 bedroom									

Work Order Number: 116759.00
Work Order Title: Concord Unit 2950 Conversion

Section - 08

91	08 14 16 00 0134	EA	3'-0" x 6'-8" x 1-3/4" Thick, 5 Ply, Hollow Core (HC), Birch Faced Wood Door									$2,910.85
				Quantity		Unit Price		Factor		Total		
			Installation	7.00	x	288.16	x	1.1320	=	2,283.38		
			Demolition	10.00	x	55.43	x	1.1320	=	627.47		
			Demo of 3 utility closet, 5 bedroom, and 2 bathroom doors. Installation of 2 utility closet, 3 bedroom, 2 bathroom doors.									
92	08 14 73 00 0074	EA	5' Wide, Two 2'-6" x 6'-8" x 1-3/8" Thick, Flush, Hollow Core (HC), Birch Faced Wood Bi-Pass Doors									$1,525.71
				Quantity		Unit Price		Factor		Total		
			Installation	3.00	x	396.94	x	1.1320	=	1,348.01		
			Demolition	2.00	x	78.49	x	1.1320	=	177.70		
			removal of 2 existing closet sliding doors, installation of 3 new closet sliding doors									
93	08 53 13 00 0549	EA	>110" To 120" UI, Horizontal Sliding Premium Vinyl Window (Pella 350)									$4,060.21
				Quantity		Unit Price		Factor		Total		
			Installation	5.00	x	631.42	x	1.1320	=	3,573.84		
			Demolition	6.00	x	71.61	x	1.1320	=	486.38		
			removal of 6 existing windows. Installation of 5 new windows per plans									
94	08 71 11 00 0004	PR	3-1/2" x 3-1/2" Standard Duty, Full Mortise, Plain Bearing, Brass/Bronze, Satin Chrome Finish Hinge									$652.61
				Quantity		Unit Price		Factor		Total		
			Installation	7.00	x	73.13	x	1.1320	=	579.48		
			Demolition	10.00	x	6.46	x	1.1320	=	73.13		
			Demo of 3 utility closet, 5 bedroom, and 2 bathroom doors. Installation of 2 utility closet, 3 bedroom, 2 bathroom doors.									
95	08 71 11 00 0005	PR	4" x 4" Standard Duty, Full Mortise, Plain Bearing, Brass/Bronze, Satin Chrome Finish Hinge									$136.35
				Quantity		Unit Price		Factor		Total		
			Installation	1.50	x	80.30	x	1.1320	=	136.35		
			for new front door per plans									
96	08 71 11 00 0513	EA	3" Projection, Residential Spring Type, Bright Brass Finish, Steel Wall Stop (Ives 63)									$130.43
				Quantity		Unit Price		Factor		Total		
			Installation	7.00	x	9.86	x	1.1320	=	78.13		
			Demolition	10.00	x	4.62	x	1.1320	=	52.30		
			per plans									
97	08 71 11 00 0655	EA	190 Degree Angle Of View, Bright Brass Finish, Brass One-Way Wide Angle Door Viewer (Ives U698)									$47.59
				Quantity		Unit Price		Factor		Total		
			Installation	1.00	x	42.04	x	1.1320	=	47.59		
			for new front door per plans									
98	08 71 11 00 2288	EA	Passage/Closet F01 Mortise LatchsetBoth sides always unlocked.									$1,471.62
				Quantity		Unit Price		Factor		Total		
			Installation	2.00	x	615.36	x	1.1320	=	1,393.18		
			Demolition	3.00	x	23.10	x	1.1320	=	78.45		
			Demo of 3 utility closet. Installation of 2 utility closet doors									
99	08 71 11 00 2289	EA	Bath/Bedroom Privacy F02/F19 Mortise LocksetLocked with thumb knob inside.									$4,323.67
				Quantity		Unit Price		Factor		Total		
			Installation	5.00	x	731.56	x	1.1320	=	4,140.63		
			Demolition	7.00	x	23.10	x	1.1320	=	183.04		
			Demo of 5 bedroom, and 2 bathroom doors. Installation of 3 bedroom, 2 bathroom doors.									

Contractor's Price Proposal - Detail Continues..

Work Order Number: 116759.00
Work Order Title: Concord Unit 2950 Conversion

Section - 08

100	08 71 11 00 2293		EA	Entrance F08 Mortise LocksetLocked with key outside and thumb knob inside.								$960.13
					Quantity		Unit Price		Factor		Total	
				Installation	1.00	x	848.17	x	1.1320	=	960.13	
				for new front door per plans								
101	08 71 11 00 2293	0263		For Satin Brass Clear Coat US4 (BHMA 606) Finish, Add								$42.78
					Quantity		Unit Price		Factor		Total	
				Installation	1.00	x	37.79	x	1.1320	=	42.78	
102	08 72 33 00 0155		LF	3/8" x 3/16", Silicon Compression Bulb, Adhesive Backed Perimeter Gasketing Weather-Strip (Pemko PK33)								$63.89
					Quantity		Unit Price		Factor		Total	
				Installation	17.00	x	3.32	x	1.1320	=	63.89	
				for new front door per plans								
103	08 72 43 00 0011		LF	6" Width, 1/4" Height, Aluminum Saddle Threshold (Pemko 272A)								$125.07
					Quantity		Unit Price		Factor		Total	
				Installation	3.00	x	36.83	x	1.1320	=	125.07	
				for new front door per plans								
104	08 72 43 00 0011	0458		For Color Anodized Finish, Add								$16.33
					Quantity		Unit Price		Factor		Total	
				Installation	3.00	x	4.81	x	1.1320	=	16.33	

Subtotal for Section - 08 **$16,937.65**

Section - 09

105	09 05 71 00 0002		SF	5 Mil Tile And Stone Acoustical Underlayment (EasyMat)								$6,391.32
					Quantity		Unit Price		Factor		Total	
				Installation	1,564.00	x	3.61	x	1.1320	=	6,391.32	
				acousthmat underlayment per plans FSI/A-602								
106	09 05 71 00 0005		SF	2 MM Thick Resilient Plank Floor Acoustical Underlayment (Floormuffler)								$2,637.97
					Quantity		Unit Price		Factor		Total	
				Installation	1,564.00	x	1.49	x	1.1320	=	2,637.97	
				closest LI to gypsum sanded floor underlayment per plans FSI/A-602								
107	09 22 13 23 0008		SF	25 Gauge, 16" On Center, Installed On Walls, Double-Leg Resilient Channel, RC2 Furring Channel								$2,604.73
					Quantity		Unit Price		Factor		Total	
				Installation	650.00	x	3.54	x	1.1320	=	2,604.73	
				Resilient channel per plans A-602								
108	09 22 13 23 0010		SF	25 Gauge, 16" On Center, Installed On Ceilings, Double-Leg Resilient Channel, RC2 Furring Channel								$7,418.18
					Quantity		Unit Price		Factor		Total	
				Installation	1,564.00	x	4.19	x	1.1320	=	7,418.18	
				Resilient channel per plans FSI/A-602								
109	09 22 36 23 0005		SF	3.4 LB/SY, Installed On Studs Or Furred Walls, Flat Diamond, Expanded Metal Lath								$3,022.16
					Quantity		Unit Price		Factor		Total	
				Installation	875.00	x	2.53	x	1.1320	=	2,505.97	
				Demolition	800.00	x	0.57	x	1.1320	=	516.19	
				removal of existing stucco and installation of new for new addition and new front entrance								

Work Order Number: 116759.00
Work Order Title: Concord Unit 2950 Conversion

Section - 09

110	09 24 23 00 0002		SF	Scratch/Brown/Finish, Three Coat Troweled StuccoExcludes lath and felt. Interior or exterior, one side.								$10,885.03
					Quantity		Unit Price		Factor		Total	
				Installation	875.00	x	8.53	x	1.1320	=	8,448.97	
				Demolition	800.00	x	2.69	x	1.1320	=	2,436.06	
				removal of existing stucco and installation of new for new addition and new front entrance								
111	09 24 23 00 0004		SF	Scratch/Finish, Two Coat Troweled StuccoExcludes lath and felt. Interior or exterior, one side.								$6,763.70
					Quantity		Unit Price		Factor		Total	
				Installation	875.00	x	5.64	x	1.1320	=	5,586.42	
				Demolition	800.00	x	1.30	x	1.1320	=	1,177.28	
				removal of existing stucco and installation of new for new addition and new front entrance								
112	09 24 23 00 0005		SF	Finish Coat Troweled StuccoExcludes lath and felt. Interior or exterior, one side.								$4,373.48
					Quantity		Unit Price		Factor		Total	
				Installation	875.00	x	3.62	x	1.1320	=	3,585.61	
				Demolition	800.00	x	0.87	x	1.1320	=	787.87	
				removal of existing stucco and installation of new for new addition and new front entrance								
113	09 29 10 00 0006		SF	5/8" Gypsum Board								$14,191.84
					Quantity		Unit Price		Factor		Total	
				Installation	8,248.00	x	1.52	x	1.1320	=	14,191.84	
				for walls and ceilings per plans								
114	09 29 10 00 0038		SF	Up To 10' High, Walls, Tape, Spackle And Finish Gypsum Board								$4,464.11
					Quantity		Unit Price		Factor		Total	
				Installation	6,684.00	x	0.59	x	1.1320	=	4,464.11	
				for walls								
115	09 29 10 00 0038	0048		For ASTM C840 Level 5 High Quality Finish, Add								$3,329.17
					Quantity		Unit Price		Factor		Total	
				Installation	6,684.00	x	0.44	x	1.1320	=	3,329.17	
116	09 29 10 00 0041		SF	Up To 10' High, Ceilings, Tape, Spackle And Finish Gypsum Board								$1,363.25
					Quantity		Unit Price		Factor		Total	
				Installation	1,564.00	x	0.77	x	1.1320	=	1,363.24	
				for ceilings								
117	09 29 10 00 0041	0048		For ASTM C840 Level 5 High Quality Finish, Add								$10,091.55
					Quantity		Unit Price		Factor		Total	
				Installation	15,640.00	x	0.57	x	1.1320	=	10,091.55	
118	09 29 10 00 0044		LF	Up To 10' High, Vertical Corners, Tape, Spackle And Finish Gypsum Board								$1,651.00
					Quantity		Unit Price		Factor		Total	
				Installation	1,236.00	x	1.18	x	1.1320	=	1,651.00	
				walls: 150 vertical corners @ 8' throughout both floors. windows: 36 LF of vertical corners								
119	09 29 10 00 0044	0048		For ASTM C840 Level 5 High Quality Finish, Add								$1,217.26
					Quantity		Unit Price		Factor		Total	
				Installation	1,236.00	x	0.87	x	1.1320	=	1,217.26	
120	09 29 10 00 0047		LF	Up To 10' High, Horizontal Corners, Tape, Spackle And Finish Gypsum Board								$1,209.66
					Quantity		Unit Price		Factor		Total	
				Installation	780.00	x	1.37	x	1.1320	=	1,209.66	
				750 LF of walls and 30 LF of windows								

Work Order Number: 116759.00
Work Order Title: Concord Unit 2950 Conversion

Section - 09

121	09 29 10 00 0047	0048		For ASTM C840 Level 5 High Quality Finish, Add								$891.79
			Installation	Quantity 780.00	x	Unit Price 1.01	x	Factor 1.1320	=	Total 891.79		
122	09 29 10 00 0051		LF	Corner Bead, Galvanized Steel For Gypsum Board								$7,508.15
			Installation	Quantity 2,016.00	x	Unit Price 3.29	x	Factor 1.1320	=	Total 7,508.15		
			walls: 150 vertical corners @ 8' throughout both floors. 750 LF of horizontal corners Windows: 86 LF									
123	09 65 13 13 0003		LF	4" High, 1/8" Thick, Type TV Thermoplastic Vinyl Wall Base, All Colors								$2,844.15
			Installation	Quantity 750.00	x	Unit Price 3.35	x	Factor 1.1320	=	Total 2,844.15		
			750 LF of walls									
124	09 65 23 00 0004		SF	0.16" Overall Thickness, 0.020" Wear Layer, Vinyl Plank Flooring (Armstrong® Luxe Plank™)								$16,907.78
			Installation	Quantity 1,564.00	x	Unit Price 9.55	x	Factor 1.1320	=	Total 16,907.78		
			new flooring throughout per plans									
125	09 91 13 00 0095		SF	1 Coat Primer, Brush/Roller Work, Paint Exterior Stucco Walls								$1,236.14
			Installation	Quantity 1,400.00	x	Unit Price 0.78	x	Factor 1.1320	=	Total 1,236.14		
			paint front and side of building for affected areas corner to corner									
126	09 91 13 00 0097		SF	2 Coats Paint, Brush/Roller Work, Paint Exterior Stucco Walls								$2,599.07
			Installation	Quantity 1,400.00	x	Unit Price 1.64	x	Factor 1.1320	=	Total 2,599.07		
			paint front and side of building for affected areas corner to corner									
127	09 91 23 00 0067		SF	1 Coat Primer, Brush/Roller Work, Paint Interior Plaster/Drywall Walls								$4,161.46
			Installation	Quantity 6,684.00	x	Unit Price 0.55	x	Factor 1.1320	=	Total 4,161.46		
			for walls									
128	09 91 23 00 0069		SF	2 Coats Paint, Brush/Roller Work, Paint Interior Plaster/Drywall Walls								$8,322.92
			Installation	Quantity 6,684.00	x	Unit Price 1.10	x	Factor 1.1320	=	Total 8,322.92		
			for walls									
129	09 91 23 00 0161		SF	1 Coat Primer, Brush/Roller Work, Paint Interior Drywall/Plaster Ceiling								$1,150.79
			Installation	Quantity 1,564.00	x	Unit Price 0.65	x	Factor 1.1320	=	Total 1,150.79		
			for ceilings									
130	09 91 23 00 0163		SF	2 Coats Paints, Brush/Roller Work, Paint Interior Drywall/Plaster Ceiling								$2,071.42
			Installation	Quantity 1,564.00	x	Unit Price 1.17	x	Factor 1.1320	=	Total 2,071.42		
			for ceilings									
131	09 91 23 00 0252		LF	1 Coat Primer, Brush/Roller Work, Paint Interior Wood Door Frame And Trim								$570.53
			Installation	Quantity 600.00	x	Unit Price 0.84	x	Factor 1.1320	=	Total 570.53		
			15 total doors. 40 LF of trim per door									
132	09 91 23 00 0254		LF	2 Coats Paint, Brush/Roller Work, Paint Interior Wood Door Frame And Trime								$1,249.73
			Installation	Quantity 600.00	x	Unit Price 1.84	x	Factor 1.1320	=	Total 1,249.73		
			15 total doors. 40 LF of trim per door									

Work Order Number: 116759.00
Work Order Title: Concord Unit 2950 Conversion

Section - 09

133	09 91 23 00 0275	EA	1 Coat Primer, Brush/Roller Work, Both Faces, Paint Interior Wood Door								$1,153.96
				Quantity		Unit Price		Factor		Total	
			Installation	15.00	x	67.96	x	1.1320	=	1,153.96	
			8 doors on first floor 7 doors on second floor								
134	09 91 23 00 0277	EA	2 Coats Paint, Brush/Roller Work, Both Faces, Paint Interior Wood Door								$2,072.58
				Quantity		Unit Price		Factor		Total	
			Installation	15.00	x	122.06	x	1.1320	=	2,072.58	
			8 doors on first floor 7 doors on second floor								
135	09 91 23 00 0307	LF	1 Coat Primer, Brush/Roller Work, Paint Interior Wood Window Frame And Trim								$163.73
				Quantity		Unit Price		Factor		Total	
			Installation	128.00	x	1.13	x	1.1320	=	163.73	
			8 windows with 128 LF of trim								
136	09 91 23 00 0309	LF	2 Coats Paint, Brush/Roller Work, Paint Interior Wood Window Frame And Trim								$357.89
				Quantity		Unit Price		Factor		Total	
			Installation	128.00	x	2.47	x	1.1320	=	357.89	
			8 windows with 128 LF of trim								
137	09 91 23 00 0350	LF	1 Coat Primer, Brush Work, Paint Interior Wood Trim To 6" Wide								$492.42
				Quantity		Unit Price		Factor		Total	
			Installation	750.00	x	0.58	x	1.1320	=	492.42	
			750 LF of baseboards								
138	09 91 23 00 0352	LF	2 Coats Paint, Paint Interior Wood Trim to 6" Wide								$1,120.68
				Quantity		Unit Price		Factor		Total	
			Installation	750.00	x	1.32	x	1.1320	=	1,120.68	
			750 LF of baseboards								

Subtotal for Section - 09 **$136,489.60**

Section - 10

139	10 28 13 13 0045	EA	Single Roll, Surface Mounted, Stainless Steel, Satin Finish, Toilet Tissue Dispenser (Bobrick B-6857)								$123.83
				Quantity		Unit Price		Factor		Total	
			Installation	1.00	x	88.61	x	1.1320	=	100.31	
			Demolition	1.00	x	20.78	x	1.1320	=	23.52	
			per plans								
140	10 28 13 13 0170	EA	36" Length, 1-1/2" Diameter, Stainless Steel Grab Bar (Bobrick B-6806x36)								$311.68
				Quantity		Unit Price		Factor		Total	
			Installation	3.00	x	91.78	x	1.1320	=	311.68	
			per plans								
141	10 28 13 13 0171	EA	42" Length, 1-1/2" Diameter, Stainless Steel Grab Bar (Bobrick B-6806x42)								$106.14
				Quantity		Unit Price		Factor		Total	
			Installation	1.00	x	93.76	x	1.1320	=	106.14	
			per plans								
142	10 28 13 13 0217	EA	Telescoping 60" To 72" Length, 20-Gauge, 1" Diameter, Stainless Steel Curved Shower Rod With Concealed Mounting (Kohler Expanse K-9349)								$158.19
				Quantity		Unit Price		Factor		Total	
			Installation	1.00	x	118.96	x	1.1320	=	134.66	
			Demolition	1.00	x	20.78	x	1.1320	=	23.52	
			per plans								

Contractor's Price Proposal - Detail Continues..

Work Order Number: 116759.00
Work Order Title: Concord Unit 2950 Conversion

Section - 10

143	10 28 13 13 0322	EA	24" Length, 3/4" Diameter, Stainless Steel Towel Bar (Bobrick B-674)									$133.36
				Quantity		Unit Price		Factor		Total		
			Installation	1.00	x	97.03	x	1.1320	=	109.84		
			Demolition	1.00	x	20.78	x	1.1320	=	23.52		
			per plans									
144	10 28 13 13 0390	EA	20" x 26", Surface Mounted, Aluminum Medicine Cabinet (Kohler K-CB)									$817.76
				Quantity		Unit Price		Factor		Total		
			Installation	1.00	x	676.23	x	1.1320	=	765.49		
			Demolition	1.00	x	46.17	x	1.1320	=	52.26		
			per plans									

Subtotal for Section - 10 **$1,650.96**

Section - 11

145	11 30 13 13 0010	EA	30" Gas Range With Oven									$2,325.17
				Quantity		Unit Price		Factor		Total		
			Installation	2.00	x	985.73	x	1.1320	=	2,231.69		
			Demolition	1.00	x	82.58	x	1.1320	=	93.48		
			remove and save existing for clients attic stock. Installation of 2 new.									
146	11 30 13 13 0015	EA	30" Venting Range Hood (Broan 40000)									$619.32
				Quantity		Unit Price		Factor		Total		
			Installation	2.00	x	242.58	x	1.1320	=	549.20		
			Demolition	1.00	x	61.94	x	1.1320	=	70.12		
			removal of existing and installation of 2 new									
147	11 30 13 13 0048	EA	>16 To 18 CF Top Freezer Refrigerator									$2,550.65
				Quantity		Unit Price		Factor		Total		
			Installation	2.00	x	1,105.96	x	1.1320	=	2,503.89		
			Demolition	1.00	x	41.30	x	1.1320	=	46.75		
			remove and save existing for clients attic stock. Installation of 2 new.									
148	11 30 13 13 0084	EA	1/3 HP Insulated Garbage Disposal (GE GFC320V)									$636.07
				Quantity		Unit Price		Factor		Total		
			Installation	2.00	x	249.98	x	1.1320	=	565.95		
			Demolition	1.00	x	61.94	x	1.1320	=	70.12		
			removal o existing and installation of new									

Subtotal for Section - 11 **$6,131.21**

Section - 12

149	12 36 61 19 0005	SF	1-1/4" Thick, Quartz Agglomerate Countertop With Backsplash									$6,914.26
				Quantity		Unit Price		Factor		Total		
			Installation	50.00	x	122.16	x	1.1320	=	6,914.26		
			25 LF of kitchen countertops									
150	12 36 61 19 0007	EA	Cutout For Sink And/Or Faucet In Quartz Agglomerate Countertop									$313.61
				Quantity		Unit Price		Factor		Total		
			Installation	2.00	x	138.52	x	1.1320	=	313.61		
			2 kitchen sinks									

Subtotal for Section - 12 **$7,227.87**

Section - 22

Work Order Number: 116759.00
Work Order Title: Concord Unit 2950 Conversion

Section - 22

151	22 01 40 81 0004	EA	Removal And Replacement Of Chrome Supply Lines To Sink/Lavatory, Pair								$297.60
				Quantity		Unit Price		Factor		Total	
			Installation	10.00	x	26.29	x	1.1320	=	297.60	
			replace supply lines in kitchens and bathrooms								
152	22 01 40 81 0006	EA	Removal And Replacement Of Double Bowl Sink/Lavatory Drain Line								$128.73
				Quantity		Unit Price		Factor		Total	
			Installation	2.00	x	56.86	x	1.1320	=	128.73	
			new drain lines								
153	22 11 16 00 0003	LF	3/4" Schedule 40 Threaded Galvanized Steel Pipe With 150 LB Malleable Iron Fitting AssemblyIncludes all hangers and all galvanized malleable iron fittings (couplings, elbows, tees and reducer fittings). All hangers are complete assemblies. Not for use where detail is available.								$7,127.07
				Quantity		Unit Price		Factor		Total	
			Installation	300.00	x	18.30	x	1.1320	=	6,214.68	
			Demolition	200.00	x	4.03	x	1.1320	=	912.39	
			gas line piping								
154	22 11 16 00 0901	LF	3/4" Inside Diameter Copper Pipe/Tubing Type L AssemblyIncludes all hangers and couplings, elbow, tee, reducer fittings. All hangers are complete assemblies. Not for use where detail is available.								$19,234.38
				Quantity		Unit Price		Factor		Total	
			Installation	650.00	x	24.17	x	1.1320	=	17,784.29	
			Demolition	350.00	x	3.66	x	1.1320	=	1,450.09	
			water line copper piping								
155	22 12 23 13 0002	EA	80 Gallon ASME Rated Tank, 150PSI, Jacketed, Insulated, Glass Lined Water Heater Storage Tank (TJ-80A)								$424.28
				Quantity		Unit Price		Factor		Total	
			Installation	0.00	x	2,141.02	x	1.1320	=	0.00	
			Demolition	1.00	x	374.81	x	1.1320	=	424.28	
			removal of existing water heater								
156	22 13 16 00 0509	LF	4" Schedule 40 Polyvinyl Chloride (PVC) DWV Pipe AssemblyIncludes all fittings, couplings and hangers. Fittings are assumed every 10'. Not for use where detail is available.								$20,147.62
				Quantity		Unit Price		Factor		Total	
			Installation	400.00	x	39.47	x	1.1320	=	17,872.02	
			Demolition	275.00	x	7.31	x	1.1320	=	2,275.60	
			Sewer and vent piping								
157	22 34 13 00 0011	EA	7.4 GPM, Outdoor Mount, Instantaneous, Tankless, Gas Domestic Water Heater (Rheem RTG-74XN)								$5,196.24
				Quantity		Unit Price		Factor		Total	
			Installation	2.00	x	2,295.16	x	1.1320	=	5,196.24	
			installation of 2 new water heaters								
158	22 41 16 16 0003	EA	33" x 21" x 6-1/2" Stainless Steel Kitchen Sink, Double Bowl, 20 Gauge (Elkay D233213)								$1,488.27
				Quantity		Unit Price		Factor		Total	
			Installation	2.00	x	607.23	x	1.1320	=	1,374.77	
			Demolition	1.00	x	100.27	x	1.1320	=	113.51	
			removal of existing and installation of new.								
159	22 41 39 00 0006	EA	Chrome Two Handle Kitchen Faucet With Spray, Three Hole Installation, 8" Center (Delta 2402LF-LHP+H215)								$454.33
				Quantity		Unit Price		Factor		Total	
			Installation	2.00	x	177.25	x	1.1320	=	401.29	
			Demolition	1.00	x	46.85	x	1.1320	=	53.03	
			removal of existing and installation of new.								

Contractor's Price Proposal - Detail Continues..

Work Order Number: 116759.00
Work Order Title: Concord Unit 2950 Conversion

Section - 22

160	22 42 13 13 0027	EA	2 Piece Tank Type, Pressure Assisted, Siphon Jet, Floor Mounted, Back Outlet, Handicap Accessible, Elongated Vitreous China Water Closet (American Standard Yorkville™ ADA)								$1,300.36
				Quantity		Unit Price		Factor		Total	
			Installation	1.00	x	1,051.28	x	1.1320	=	1,190.05	
			Demolition	1.00	x	97.45	x	1.1320	=	110.31	
			remove existing and install new ADA toilet								
161	22 42 16 13 0009	EA	27" x 20" Wheelchair Accessible, Vitreous China Wall Hung Lavatory (American Standard Wheel Chair Users)								$776.98
				Quantity		Unit Price		Factor		Total	
			Installation	1.00	x	623.60	x	1.1320	=	705.92	
			Demolition	1.00	x	62.78	x	1.1320	=	71.07	
			remove existing and install new ADA sink, faucet, and drain cover.								
162	22 42 19 00 0027	EA	3 Piece Tub/Shower Surrounds, 32" x 72" Side Walls, 48" x 72" Back, (Swanstone SK-324872)								$3,166.32
				Quantity		Unit Price		Factor		Total	
			Installation	1.00	x	2,797.10	x	1.1320	=	3,166.32	
			new tub/shower for ADA bathroom								
163	22 42 39 00 0042	EA	Single Supply EcoPower® Faucet, Polished Chrome Finish (Toto TEL3LS10#CP)								$709.36
				Quantity		Unit Price		Factor		Total	
			Installation	1.00	x	626.64	x	1.1320	=	709.36	
			ADA sink, faucet, and drain cover.								
164	22 42 39 00 0064	EA	Three Lever Handle, Chrome Shower And Tub Filler (American Standard Colony Soft 3375.502)								$293.63
				Quantity		Unit Price		Factor		Total	
			Installation	1.00	x	218.72	x	1.1320	=	247.59	
			Demolition	1.00	x	40.67	x	1.1320	=	46.04	
			per plans								
165	22 42 39 00 0210	EA	Lavatory Protective Enclosure (IPS Truebro Lav Shield)								$350.49
				Quantity		Unit Price		Factor		Total	
			Installation	2.00	x	154.81	x	1.1320	=	350.49	
			drain cover for ADA kitchen and bathroom sink								
166	22 42 39 00 0217	EA	1/2" NPT x 3/8" Compression Chrome, Quarter Turn Dual Angle Stop (SharkBite 25558)								$555.72
				Quantity		Unit Price		Factor		Total	
			Installation	10.00	x	41.22	x	1.1320	=	466.61	
			Demolition	8.00	x	9.84	x	1.1320	=	89.11	
			new angle stops installed in bathrooms and kitchens								

Subtotal for Section - 22 **$61,651.38**

Section - 23

167	23 05 93 00 0017	EA	Balancing HVAC Duct System, Floor Height Supply, Return, Exhaust, Register And Diffuser								$61.88
				Quantity		Unit Price		Factor		Total	
			Installation	1.00	x	54.66	x	1.1320	=	61.88	
			required setup, balancing, and charging for new system								
168	23 09 23 53 0284	EA	Scheduling Program, HVAC (AHU, RTU, AC Units, Etcetera) Programming Measures								$3,880.60
				Quantity		Unit Price		Factor		Total	
			Installation	1.00	x	3,428.09	x	1.1320	=	3,880.60	
			required setup, balancing, and charging for new system								

Work Order Number: 116759.00
Work Order Title: Concord Unit 2950 Conversion

Section - 23

169	23 31 13 16 0063	EA	4" Diameter, 26 Gauge, 2" WG And Less (Class C), Galvanized Sheet Metal Round And Flat-Oval Connector										$240.41
				Quantity		Unit Price		Factor		Total			
			Installation	14.00	x	15.17	x	1.1320	=	240.41			
			exhaust ducting for dyer per plans										
170	23 33 13 13 0006	EA	12" Diameter Radial Opposed Blade Damper Round, Steel Construction, Manual Operated										$140.78
				Quantity		Unit Price		Factor		Total			
			Installation	1.00	x	113.45	x	1.1320	=	128.43			
			Demolition	1.00	x	10.91	x	1.1320	=	12.35			
			HVAC per plans										
171	23 33 46 00 0008	LF	12" Diameter Flexible Duct, R8.0 Insulated With Polyester Inner Liner And Metallized Outer Jacket										$2,231.74
				Quantity		Unit Price		Factor		Total			
			Installation	100.00	x	15.36	x	1.1320	=	1,738.75			
			Demolition	130.00	x	3.35	x	1.1320	=	492.99			
			HVAC per plans										
172	23 33 46 00 0020	EA	12" Diameter Flexible Duct Collar, Spin In Type, Sheet Metal, With Damper										$100.97
				Quantity		Unit Price		Factor		Total			
			Installation	1.00	x	76.62	x	1.1320	=	86.73			
			Demolition	1.00	x	12.58	x	1.1320	=	14.24			
			HVAC per plans										
173	23 34 16 00 0127	EA	30" Diameter Wheel, 2 HP, 10,192 CFM At 1/4" Static Pressure, Belt Drive, Kitchen Upblast Exhaust Fan115/208-230/60/3. Includes heat baffle, grease baffle and disconnect switch.										$9,622.60
				Quantity		Unit Price		Factor		Total			
			Installation	2.00	x	4,153.39	x	1.1320	=	9,403.27			
			Demolition	1.00	x	193.75	x	1.1320	=	219.33			
			removal of one existing and installation of 2 new										
174	23 34 16 00 0275	EA	109 CFM, Ceiling/Wall Mounted, Metal Intake Grille, Heavy Duty/Continuous Operation Exhaust Fan (Broan® LoSone® Ventilator L100MG)										$897.54
				Quantity		Unit Price		Factor		Total			
			Installation	2.00	x	379.30	x	1.1320	=	858.74			
			Demolition	1.00	x	34.28	x	1.1320	=	38.80			
			exhaust fan per plans EF-1										
175	23 37 13 13 0080	EA	20" x 20" Single Deflection Return/Exhaust Register, Aluminum, Opposed Blade Damper, Wall/Ceiling										$319.70
				Quantity		Unit Price		Factor		Total			
			Installation	1.00	x	265.64	x	1.1320	=	300.70			
			Demolition	1.00	x	16.78	x	1.1320	=	18.99			
			HVAC per plans										
176	23 37 13 13 0225	EA	18" x 8" 4-Way Adjustable Wall Supply Grille, Adjustable Deflection, Aluminum Construction										$2,395.67
				Quantity		Unit Price		Factor		Total			
			Installation	7.00	x	275.90	x	1.1320	=	2,186.23			
			Demolition	11.00	x	16.82	x	1.1320	=	209.44			
			HVAC per plans										
177	23 54 16 13 0007	EA	120 MBH, 2,000 CFM Up/Horizontal Flow Multi-Speed, Two Stage 96% AFUE Gas FurnaceBlower cooling capacity up to 5 tons.										$5,879.99
				Quantity		Unit Price		Factor		Total			
			Installation	2.00	x	2,597.17	x	1.1320	=	5,879.99			
			per plans. SH-1 and SH-2 wall mounted furnaces										

Work Order Number: 116759.00
Work Order Title: Concord Unit 2950 Conversion

Section - 23

178	23 81 49 00 0020	EA	7-1/2 Ton Indoor Section Split Heat Pump Packaged Unit, Horizontal Upflow With 10 KW Electric Heat									$4,932.97
				Quantity		Unit Price		Factor		Total		
			Installation	1.00	x	4,047.74	x	1.1320	=	4,582.04		
			Demolition	1.00	x	310.01	x	1.1320	=	350.93		
			new furnace per clients request									

Subtotal for Section - 23 **$30,704.85**

Section - 26

179	26 01 20 91 0002	EA	Lock Out/Tag Out Local DisconnectExcludes tag or padlock See CSI section 26 01 20 91-0004 for padlock, 26 01 20 91-0005 for tag(s).									$523.83
				Quantity		Unit Price		Factor		Total		
			Installation	15.00	x	30.85	x	1.1320	=	523.83		
			LOTO of existing circuits									
180	26 05 19 16 0402	MLF	#12 AWG, 3 Conductors, 600 Volt, Type NM, Copper, Non-Metallic Sheathed Cable									$12,214.42
				Quantity		Unit Price		Factor		Total		
			Installation	4.00	x	2,697.53	x	1.1320	=	12,214.42		
			for new electrical runs per plans									
181	26 05 19 16 0402	0377	For Installation In Wood Stud Wall (Includes Drilling), Add									$1,272.82
				Quantity		Unit Price		Factor		Total		
			Installation	4.00	x	281.10	x	1.1320	=	1,272.82		
182	26 09 23 00 0109	EA	Wall Switch Replacement Occupancy Sensor, Single GangIncludes integral occupancy sensor and relay.									$1,204.00
				Quantity		Unit Price		Factor		Total		
			Installation	10.00	x	106.36	x	1.1320	=	1,204.00		
			per plans									
183	26 09 23 00 0235	EA	Passive Infrared, Wall Switch Mounted, Wired Occupancy Sensor (Encelium PW-100-24)Excludes GB II cable.									$586.31
				Quantity		Unit Price		Factor		Total		
			Installation	2.00	x	258.97	x	1.1320	=	586.31		
			for bathrooms									
184	26 24 13 00 0213	EA	800 Amperes, 480 Volt, 4 Wire, Switchboard Incoming No Switch Circuit									$5,781.11
				Quantity		Unit Price		Factor		Total		
			Installation	1.00	x	4,332.49	x	1.1320	=	4,904.38		
			Demolition	1.00	x	774.50	x	1.1320	=	876.73		
			for new main panel to new units subpanels									
185	26 24 16 00 0470	EA	200 Ampere Rating, Main Breaker, Indoor, 42 Circuit, 4 Wire, 120/208 Volt, Assembled Panelboard With 20 Ampere, 1 Pole Plug-In Breakers									$7,931.90
				Quantity		Unit Price		Factor		Total		
			Installation	2.00	x	3,075.97	x	1.1320	=	6,964.00		
			Demolition	1.00	x	855.04	x	1.1320	=	967.91		
			1 new sub panel for each unit									
186	26 27 13 00 0125	EA	Single Phase M-90 Meter, Socket, NEMA 3R Enclosure									$6,442.28
				Quantity		Unit Price		Factor		Total		
			Installation	6.00	x	905.76	x	1.1320	=	6,151.92		
			Demolition	5.00	x	51.30	x	1.1320	=	290.36		
			installation of new meters for building									
187	26 27 26 00 0009	EA	20 Amperes, 1 Gang, GFI, Duplex Receptacle Assembly									$3,825.42
				Quantity		Unit Price		Factor		Total		
			Installation	30.00	x	96.40	x	1.1320	=	3,273.74		
			Demolition	15.00	x	32.49	x	1.1320	=	551.68		
			All new GFI outlets throughout per clients request									

Contractor's Price Proposal - Detail Continues..

Work Order Number: 116759.00
Work Order Title: Concord Unit 2950 Conversion

Section - 26

188	26 27 26 00 0125		EA	20 Amperes, 125 Volt Single Specification Grade Tamper Resistant ReceptaclePass & Seymour TR5351.									$1,944.32
					Quantity		Unit Price		Factor		Total		
				Installation	40.00	x	34.39	x	1.1320	=	1,557.18		
				Demolition	40.00	x	8.55	x	1.1320	=	387.14		
				all new outlets throughout per clients request									
189	26 27 26 00 0138		EA	1 Gang, 20 Amperes, 120/277 Volt, SPST, Switch Assembly									$3,327.23
					Quantity		Unit Price		Factor		Total		
				Installation	25.00	x	85.08	x	1.1320	=	2,407.76		
				Demolition	25.00	x	32.49	x	1.1320	=	919.47		
				25 switches total in both units									
190	26 51 19 00 0312		EA	8" Diameter, 1,200 Lumens, Recessed LED Downlight With Open Trim (Lithonia DOM8 LED)									$7,780.09
					Quantity		Unit Price		Factor		Total		
				Installation	19.00	x	324.11	x	1.1320	=	6,970.96		
				Demolition	19.00	x	37.62	x	1.1320	=	809.13		
				19 new slim LED lights per plans and owners request									
191	26 51 19 00 0312	0543	EA	For Dimming Driver And Sensor Switch nLight Dimming Relay, Add									$1,339.77
					Quantity		Unit Price		Factor		Total		
				Installation	17.00	x	69.62	x	1.1320	=	1,339.77		
192	26 51 19 00 0430		EA	5" Shallow, Insulated Ceiling, Air-Tite New Construction (Cooper Halo H25ICAT)									$314.84
					Quantity		Unit Price		Factor		Total		
				Installation	3.00	x	92.71	x	1.1320	=	314.84		
				3 new 5" slim LED lights per plans									
193	26 51 19 00 0470		EA	2-1/2" Diameter x 15-1/2" High, Polished Nickel, LED Wall Sconce (Hudson Valley Lighting SHAW 1200-PN)									$1,017.22
					Quantity		Unit Price		Factor		Total		
				Installation	2.00	x	415.10	x	1.1320	=	939.79		
				Demolition	2.00	x	34.20	x	1.1320	=	77.43		
				2 new wall sconces per plans in bathrooms									
194	26 56 19 00 0031		EA	9,503 Lumens, 77 Watt, 3 LEDs, Wall Mounted Security Fixture (Jarvis Corp WMFT-350)									$1,530.14
					Quantity		Unit Price		Factor		Total		
				Installation	3.00	x	388.10	x	1.1320	=	1,317.99		
				Demolition	3.00	x	62.47	x	1.1320	=	212.15		
				replace 3 existing exterior lights per clients request									

Subtotal for Section - 26 **$57,035.70**

Section - 31

195	31 05 16 00 0002		CY	#2 Stone Aggregate Fill (1-1/2" To 2-1/2" Clean)									$1,295.01
					Quantity		Unit Price		Factor		Total		
				Installation	25.00	x	45.76	x	1.1320	=	1,295.01		
				4" deep, 200 LF, 2' wide base for backfill for trenching. 20 CY for footings, and slabs									
196	31 05 16 00 0002	0053		For Up To 8, Add									$51.79
					Quantity		Unit Price		Factor		Total		
				Installation	5.00	x	9.15	x	1.1320	=	51.79		
197	31 11 00 00 0008		ACR	Clearing By Machine - Light Brush Without Grub									$174.72
					Quantity		Unit Price		Factor		Total		
				Installation	0.50	x	308.69	x	1.1320	=	174.72		
				clear out weeds in back yard									

Contractor's Price Proposal - Detail Continues..

Work Order Number: 116759.00
Work Order Title: Concord Unit 2950 Conversion

Section - 31

198	31 11 00 00 0017	CY	Hand Loading Of Cleared And Grubbed Material									$849.91
				Quantity		Unit Price		Factor		Total		
			Installation	20.00	x	37.54	x	1.1320	=	849.91		
			clear out weeds in back yard									
199	31 23 16 13 0007	CY	Excavation For Trenching By Hand In SoilIncludes stockpiling excess materials and trimming sides and bottom of trench.									$3,505.24
				Quantity		Unit Price		Factor		Total		
			Installation	25.00	x	123.86	x	1.1320	=	3,505.24		
			20" deep, 200 LF, 2' wide									
200	31 23 16 13 0011	CY	Backfilling or Placing Subbase for Trenches with Imported or Stockpiled Materials by Hand									$973.80
				Quantity		Unit Price		Factor		Total		
			Installation	25.00	x	34.41	x	1.1320	=	973.80		
			20" deep, 200 LF, 2' wide									
201	31 23 16 13 0014	CY	Compaction of Fill or Subbase for Trenches by Hand									$1,098.61
				Quantity		Unit Price		Factor		Total		
			Installation	25.00	x	38.82	x	1.1320	=	1,098.61		
			20" deep, 200 LF, 2' wide									
202	31 23 16 36 0009	CY	Excavation For Building Foundations And Other Structures By Hand in Soil									$6,309.43
				Quantity		Unit Price		Factor		Total		
			Installation	45.00	x	123.86	x	1.1320	=	6,309.43		
			for footings and slab									
203	31 23 16 36 0019	CY	Backfilling Around Building Foundations And Other Structures By Hand									$1,335.53
				Quantity		Unit Price		Factor		Total		
			Installation	20.00	x	58.99	x	1.1320	=	1,335.53		
			for footings and slab									
204	31 23 16 36 0022	CY	Compaction Of Fill Or Subbase For Building Foundations and Other Structures by Hand									$1,976.98
				Quantity		Unit Price		Factor		Total		
			Installation	45.00	x	38.81	x	1.1320	=	1,976.98		
			for footings and slab									

Subtotal for Section - 31 **$17,571.02**

Section - 32

205	32 16 13 13 0016	LF	6" x 12" Cast In Place Concrete Gutter With 6" Curb And Face - Straight									$609.07
				Quantity		Unit Price		Factor		Total		
			Installation	15.00	x	24.92	x	1.1320	=	423.14		
			Demolition	15.00	x	10.95	x	1.1320	=	185.93		
			for parking lot ADA modifications									
206	32 16 23 00 0002	SF	4" Cast In Place Concrete Sidewalk									$586.15
				Quantity		Unit Price		Factor		Total		
			Installation	60.00	x	8.63	x	1.1320	=	586.15		
			for parking lot ADA modifications									
207	32 16 23 00 0002 0094		For Up To 100, Add									$248.59
				Quantity		Unit Price		Factor		Total		
			Installation	60.00	x	3.66	x	1.1320	=	248.59		
208	32 16 23 00 0008	EA	Finish Concrete Handicap Drop Section In SidewalkExcludes patterned (tactile) finish.									$145.65
				Quantity		Unit Price		Factor		Total		
			Installation	1.00	x	128.67	x	1.1320	=	145.65		
			for parking lot ADA modifications									

Contractor's Price Proposal - Detail Continues..

Work Order Number: 116759.00
Work Order Title: Concord Unit 2950 Conversion

Section - 32

209	32 17 23 13 0074	SF	Solid Area, Painted Pavement Marking For Parking AreasUse task for lines >12" wide, stop bars, transverse lines, diagonal lines, crossing lanes, etc.									$281.82
				Quantity		Unit Price		Factor		Total		
			Installation	64.00	x	3.89	x	1.1320	=	281.82		
			for parking lot ADA modifications									
210	32 17 23 13 0088	EA	Handicap Symbol For Van Parking Stalls, Painted Pavement Marking For Parking AreasApproximate overall dimensions: 4-1/3' width x 5' height. White or blue symbol. Excludes striping.									$86.15
				Quantity		Unit Price		Factor		Total		
			Installation	2.00	x	38.05	x	1.1320	=	86.15		
			for parking lot ADA modifications									
211	32 17 26 00 0003	SF	Embedded, VPC Truncated Dome Detectable Warning SurfaceAlso raised strips or directional bars. All colors.									$832.25
				Quantity		Unit Price		Factor		Total		
			Installation	16.00	x	45.95	x	1.1320	=	832.25		
			new truncated domes per A-501									
212	32 31 23 00 0006	LF	6' High Privacy Tongue And Groove Vinyl Fence									$3,593.82
				Quantity		Unit Price		Factor		Total		
			Installation	45.00	x	63.16	x	1.1320	=	3,217.37		
			Demolition	45.00	x	7.39	x	1.1320	=	376.45		
			removal of existing vinyl fence and installation of new due to ADA width requirements . includes a 4' wide ADA gate									
213	32 31 23 00 0051	EA	6' High x 4' Wide Vinyl Gate For Privacy Or Semi-Privacy Fence And Hinge Set									$757.38
				Quantity		Unit Price		Factor		Total		
			Installation	1.00	x	611.32	x	1.1320	=	692.01		
			Demolition	1.00	x	57.74	x	1.1320	=	65.36		
			removal of existing vinyl fence and installation of new due to ADA width requirements . includes a 4' wide ADA gate									
214	32 31 23 00 0078	EA	Stainless Steel Latch Set									$124.46
				Quantity		Unit Price		Factor		Total		
			Installation	1.00	x	109.95	x	1.1320	=	124.46		
			removal of existing vinyl fence and installation of new due to ADA width requirements . includes a 4' wide ADA gate									

Subtotal for Section - 32 **$7,265.34**

Proposal Total **$610,749.96**

This total represents the correct total for the proposal. Any discrepancy between line totals, sub-totals and the proposal total is due to rounding.

The Percentage of NPP on this Proposal: **%**

Subcontractor Listing

Date: June 06, 2023

Re:

IQC Master Contract #:	CA-R7-GB06-123021-MDJ
Work Order #:	116759.00
Owner PO #:	
Title:	Concord Unit 2950 Conversion
Contractor:	MDJ Management
Proposal Value:	$610,749.96

Name of Contractor	Duties	Amount	%
Janus Corporation		$100,000.00	16.37
Refined Construction		$450,000.00	73.68

EXHIBIT A

GORDIAN®

Work Order Signature Document

EZIQC Contract No.: CA-R7-GB06-123021-MDJ

[X] **New Work Order** [ ] **Modify an Existing Work Order**

Work Order Number.:	116760.00	Work Order Date:	06/06/2023
Work Order Title:	Concord Unit 2956 Conversion		
Owner Name:	Oxnard Housing Authority	Contractor Name:	MDJ Management
Contact:	Fredi Contreras	Contact:	Matt McMillon
Phone:	805-890-8319	Phone:	310-490-1521

Work to be Performed

Work to be performed as per the Final Detailed Scope of Work Attached and as per the terms and conditions of Sourcewell EZIQC Contract No CA-R7-GB06-123021-MDJ.

Brief Work Order Description:

Time of Performance Estimated Start Date:

Estimated Completion Date:

Liquidated Damages Will apply: [ ] Will not apply: [X]

Work Order Firm Fixed Price: $610,749.96

Owner Purchase Order Number:

Approvals

Oxnard Housing Authority Date

MDJ Management Date

Detailed Scope of Work

To: Matt McMillon
MDJ Management
531 Main St #611
El Segundo, CA 90245
310-490-1521

From: Fredi Contreras
Oxnard Housing Authority
300 N. Marquita Street
Oxnard, CA 93030
805-890-8319

Date Printed: June 06, 2023

Work Order Number: 116760.00

Work Order Title: Concord Unit 2956 Conversion

Brief Scope:

☐ **Preliminary** ☐ **Revised** ☒ **Final**

The following items detail the scope of work as discussed at the site. All requirements necessary to accomplish the items set forth below shall be considered part of this scope of work.

See attached

Subject to the terms and conditions of ezIQC Contract **CA-R7-GB06-123021-MDJ**.

MDJ Management _____ Date _____

Oxnard Housing Authority _____ Date _____

MDJ Management, LLC
License # 1044711
DIR # 1000061313
531 Main St. #611 El Segundo CA 90245
310-490-1521

Job Name: 2956 Concord ADA Conversion
Location: 2956 Concord Dr. Oxnard, CA 93036
Customer: Oxnard Housing Authority

Submission Date: 5/31/23

Detailed Scope of Work

Demolition

- Demolition of existing apartment per plans
- Per Asbestos Survey report provided by client all walls, ceilings and floors to be considered ACM
    - Demolition of unit to be performed by certified hazardous material demolition company

Installation/Buildout

- Saw cutting of slab and demolition of concrete for new plumbing
- Excavation for new plumbing and new concrete footings for addition
- All framing throughout including new walls and soffits
- New rough and finish plumbing throughout
- New electrical rough including new panel per plan
- Concrete work:
    - Pour new footings for addition
    - Pour back all open trenches inside the unit
    - Pour slab for addition
    - Our sidewalk as required
- New windows and doors
- New Insulation
- HVAC ductwork, registers, and wall heaters.
    - Includes new forced air unit
- Drywall throughout
- Lath, stucco, and color coat to match existing
- Roofing, fascia, and gutters for new addition
- Interior paint
- New Flooring and base
- New kitchens, countertops, fixtures, sinks and appliances.

- New bathroom fixtures per plan
- Paint exterior of building
- Site work:
    - New sidewalks
    - Handicap ramp with truncated domes
    - Handicap striping
    - New signage at Handicap stall

Installation/Buildout added by Client NOT included on plans

- Remove and replace all outlets and switches throughout, even on all existing walls
- Remove and replace exterior lighting with LED lighting
    - Match existing 3 fixtures
- Install MDF baseboards
    - Instead of called out cove base
- Remove and replace all interior doors. Complete list of doors from plans as well as clients request:
    - Demo of 3 utility closet, 2 sliding closet, 5 bedroom, and 2 bathroom doors
    - Installation of 2 utility closet, 3 sliding closet, 3 bedroom, 2 bathroom doors, and 1 front door
- Clean up existing back yard, the weeds are 5 feet high
    - Includes weed weed whacking and removal of all dead weeds
- Remove and replace one section of vinyl fence because it is not wide enough for ADA width along concrete path to front door
    - 45 feet x 6 feet high
    - (1) One 4' Gate
    - Includes widening the concrete by one foot

Notes:

- All work to be performed per plans provided to MDJ
- Any additional add on items will be at the request of Customer. Any adjustment shall be an additional cost.
- Price includes all labor (**Normal Working Hours - Davis Bacon Wages**), materials, equipment to complete this scope of work.
- Construction Exclusions:
    - New Washer and Dryer not included in contract.

CLARIFICATIONS AND EXCLUSIONS:

- Warranty
    - One year warranty against workmanship
    - Manufacturer's warranty varies
- We exclude plans, permits, permit fees, related fees, testing, inspection, survey, and engineering unless specified above
- We exclude utilities and hazardous or contaminated material.
- Construction water, power, and sanitary facilities available on site for MDJ's use at no cost.
- We exclude premium time.
- We exclude anything not specifically mentioned above.
- MDJ reserves the right to review, change, and/or delete any provisions of any prime contract or subcontract, which results from this quotation.

- All terms to be net 30 days in full upon receipt of invoice. Interest will be charged at the rate of 2% monthly on the unpaid balance.

BID PRICE: See Price Proposal

All work to be completed in a substantial and workmanlike manner according to standard practices for the sum of **See Price Proposal.** Any additional add on items will be at the request of Customer. Any adjustment shall be an additional cost.

Bid price is good for thirty (30) days only.

Any controversy or claim based on, arising out of, or relating to this agreement, or breach thereof, including any claim based on the work performed pursuant to this agreement, shall be submitted to the American Arbitration Association for binding arbitration in accordance with its rules. If any arbitration, legal action is brought to enforce this agreement, or arising out of or relating to the agreement, the prevailing party shall be entitled to recover from the non-prevailing party reasonable attorney fees and costs incurred, in addition to any and all other relief to which that party may be entitled.

Submitted by:

Matthew McMillon
President MDJ
310.490.1521
matt@buildwithmdj.com

Contractor's Price Proposal - Summary

Date: June 06, 2023

Re:

IQC Master Contract #:	CA-R7-GB06-123021-MDJ
Work Order #:	116760.00
Owner PO #:	
Title:	Concord Unit 2956 Conversion
Contractor:	MDJ Management
Proposal Value:	$610,749.96

Section - 01	**$27,922.15**
Section - 02	**$124,779.67**
Section - 03	**$44,628.54**
Section - 06	**$30,807.26**
Section - 07	**$39,946.76**
Section - 08	**$16,937.65**
Section - 09	**$136,489.60**
Section - 10	**$1,650.96**
Section - 11	**$6,131.21**
Section - 12	**$7,227.87**
Section - 22	**$61,651.38**
Section - 23	**$30,704.85**
Section - 26	**$57,035.70**
Section - 31	**$17,571.02**
Section - 32	**$7,265.34**
Proposal Total	**$610,749.96**

Thisl total represents the correct total for the proposal. Any discrepancy between line totals, sub-totals and the proposal total is due to rounding.

The Percentage of NPP on this Proposal: %

Contractor's Price Proposal - Detail

Date: June 06, 2023

Re:

IQC Master Contract #:	CA-R7-GB06-123021-MDJ
Work Order #:	116760.00
Owner PO #:	
Title:	Concord Unit 2956 Conversion
Contractor:	MDJ Management
Proposal Value:	$610,749.96

	Sect.	Item	Mod.	UOM	Description	Line Total
Labor	Equip.	Material	(Excludes)			

Section - 01

1	01 22 16	00 0002		EA	Reimbursable FeesReimbursable Fees will be paid to the contractor for eligible costs as directed by Owner. Insert the appropriate quantity to adjust the base cost to the actual Reimbursable Fee. If there are multiple Reimbursable Fees, list each one separately and add a comment in the "note" block to identify the Reimbursable Fee (e.g. sidewalk closure, road cut, various permits, extended warranty, expedited shipping costs, etc.). A copy of each receipt shall be submitted with the Price Proposal.	$13,147.20

	Quantity		Unit Price		Factor		Total
Installation	11,952.00	x	1.00	x	1.1000	=	13,147.20

Bond = $597,602 x 2%

2	01 74 19	00 0016		EA	40 CY Dumpster (5 Ton) "Construction Debris"Includes delivery of dumpster, rental cost, pick-up cost, hauling, and disposal fee. Non-hazardous material.	$11,002.63

	Quantity		Unit Price		Factor		Total
Installation	12.00	x	809.97	x	1.1320	=	11,002.63

10 dumpsters for abatement debris: cabinets, drywall from entire house, shower, toilet, stucco, insulation, ...
2 dumpsters for construction debris: drywall cuts, lumber cuts, basic trash

3	01 74 19	00 0019		EA	15 CY Low-Boy Dumpster Mixed RecyclableFor mixed dirt, rock, concrete brick or asphalt with no trash or organics. Includes service to deliver and pick-up dumpster, hauling, rental and disposal fee.	$3,772.32

	Quantity		Unit Price		Factor		Total
Installation	4.00	x	833.11	x	1.1320	=	3,772.32

for removal of excavated soil for footings, slab, trenching

Subtotal for Section - 01 **$27,922.15**

Section - 02

4	02 41 19	13 0063		LF	Rod Reinforced Concrete Slab Up To 4" Depth, Saw Cut	$2,499.46

	Quantity		Unit Price		Factor		Total
Installation	400.00	x	5.52	x	1.1320	=	2,499.46

sawcut existing slab to trench for new electrical and plumbing runs as needed per plans

5	02 82 33	00 0067		SF	>2,500 To 10,000 SF, Single Layer Gypsum Wall Board, Asbestos Abatement And Disposal	$62,951.52

	Quantity		Unit Price		Factor		Total
Installation	6,684.00	x	8.32	x	1.1320	=	62,951.52

demolition throughout. All drywall mud is hot. ceilings and walls

6	02 82 33	00 0074		SF	>500 To 2,500 SF, Gypsum Wall Board (Or Backer Board) With Ceramic Tile And Mastic, Asbestos Abatement And Disposal	$12,439.55

	Quantity		Unit Price		Factor		Total
Installation	550.00	x	19.98	x	1.1320	=	12,439.55

demolition of bathrooms tile and backer board walls and floor as well as kitchen tile

7	02 82 33	00 0087		SF	>500 To 2,500 SF, Spray On Acoustical Ceiling, Asbestos Abatement And Disposal	$16,659.92

	Quantity		Unit Price		Factor		Total
Installation	1,564.00	x	9.41	x	1.1320	=	16,659.92

demolition

Work Order Number: 116760.00
Work Order Title: Concord Unit 2956 Conversion

Section - 02

8	02 82 33 00 0101		SF	>500 To 2,500 SF, Single Layer Or First Of Multiple Layers, Floor Tile, Asbestos Abatement And Disposal									$10,959.07
					Installation	Quantity 1,564.00	x	Unit Price 6.19	x	Factor 1.1320	=	Total 10,959.07	
				demolition of 2 layers of floor tile									
9	02 82 33 00 0101	0001		For Each Additional Layer, Add									$2,744.19
					Installation	Quantity 1,564.00	x	Unit Price 1.55	x	Factor 1.1320	=	Total 2,744.19	
10	02 82 33 00 0245		CF	>100 To 250 CF, Asbestos Contaminated Debris, Asbestos Abatement And Disposal									$13,881.15
					Installation	Quantity 250.00	x	Unit Price 49.05	x	Factor 1.1320	=	Total 13,881.15	
				demolition of all cabinets and vanities per plans. They are attached to the walls so removal would disturb drywall material that is hot. This is for kitchen and bathroom									
11	02 82 33 00 0333		SF	High Efficiency Particulate Air (HEPA) Vacuum And Cleaning Of Contaminated Area									$1,186.20
					Installation	Quantity 1,564.00	x	Unit Price 0.67	x	Factor 1.1320	=	Total 1,186.20	
				demolition part of abatement procedures									
12	02 89 00 00 0021		EA	3 Stage Portable Personnel Decontamination Wash FacilityIncludes connection to negative air system.									$907.07
					Installation	Quantity 1.00	x	Unit Price 801.30	x	Factor 1.1320	=	Total 907.07	
				demolition part of abatement procedures									
13	02 89 00 00 0023		EA	Portable Waste Decontamination UnitIncludes connection to negative air system.									$551.54
					Installation	Quantity 1.00	x	Unit Price 487.23	x	Factor 1.1320	=	Total 551.54	
				demolition									

Subtotal for Section - 02 **$124,779.67**

Section - 03

14	03 11 13 00 0003		SF	Continuous Footings Foundation Wood Formwork									$1,882.74
					Installation	Quantity 240.00	x	Unit Price 6.93	x	Factor 1.1320	=	Total 1,882.74	
				footing for new addition									
15	03 11 13 00 0003	0001		For <1,000, Add									$350.47
					Installation	Quantity 240.00	x	Unit Price 1.29	x	Factor 1.1320	=	Total 350.47	
16	03 11 13 00 0009		LF	Up To 6" High Slab Edge and Block-Out Wood Formwork									$699.89
					Installation	Quantity 116.00	x	Unit Price 5.33	x	Factor 1.1320	=	Total 699.89	
				for new addition									
17	03 11 13 00 0009	0004		For Up To 250, Add									$69.28
					Installation	Quantity 60.00	x	Unit Price 1.02	x	Factor 1.1320	=	Total 69.28	
18	03 21 11 00 0251		EA	Dowels Or Hairpin, 1/2" x 30" Length, Drilled And Epoxy In Concrete, 6" Embedment									$5,682.36
					Installation	Quantity 225.00	x	Unit Price 22.31	x	Factor 1.1320	=	Total 5,682.36	
				200 LF of trenching. Epoxy and Dowel every 2'. One on each side. For reinforcement and tying into existing slab adjacent. 25 dowels to attach from porch sidewalk to existing .									

Contractor's Price Proposal - Detail Continues..

Work Order Number: 116760.00
Work Order Title: Concord Unit 2956 Conversion

Section - 03

19	03 21 13 00 0093		LF	#6, Grade 50, Slab On Grade, Galvanized Steel Reinforcement Bar								$2,010.43
					Quantity		Unit Price		Factor		Total	
				Installation	800.00	x	2.22	x	1.1320	=	2,010.43	
				200 LF of trenching and 600 LF for slab, porch, and footings. Installation of rebar every 2'.								
20	03 30 53 00 0007		CF	Hand Mix And Place ConcreteFor use where conventional equipment access is limited or when directed by the owner.								$6,592.77
					Quantity		Unit Price		Factor		Total	
				Installation	200.00	x	29.12	x	1.1320	=	6,592.77	
				patch back trenching in existing slab								
21	03 31 13 00 0003		SF	4" 3,000 PSI Slab On Grade Concrete Slabs Assembly								$1,768.18
					Quantity		Unit Price		Factor		Total	
				Installation	200.00	x	7.81	x	1.1320	=	1,768.18	
				for new addition								
22	03 31 13 00 0003	0156		For Up To 500, Add								$681.46
					Quantity		Unit Price		Factor		Total	
				Installation	200.00	x	3.01	x	1.1320	=	681.46	
23	03 31 13 00 0023		CY	Concrete Pump, Place 3,000 PSI Concrete Spread FootingsExcludes pumping equipment.								$14,833.73
					Quantity		Unit Price		Factor		Total	
				Installation	50.00	x	262.08	x	1.1320	=	14,833.73	
				24 CY footing for new addition. 26 CY for Front porch/sloped walk								
24	03 31 13 00 0023	0040		For >20 To 50, Add								$638.45
					Quantity		Unit Price		Factor		Total	
				Installation	50.00	x	11.28	x	1.1320	=	638.45	
25	03 54 16 00 0005		SF	1/2" Thick Self Leveling Cementitious Underlayment For FloorsIncluding Surface Preparation								$9,418.78
					Quantity		Unit Price		Factor		Total	
				Installation	1,564.00	x	5.32	x	1.1320	=	9,418.78	
				self leveling of floors for prior to installation of new vinyl plank flooring								

Subtotal for Section - 03 **$44,628.54**

Section - 06

26	06 11 16 00 0061		SF	2" x 4" Wood Wall Framing At 16" On Center								$2,351.16
					Quantity		Unit Price		Factor		Total	
				Installation	950.00	x	1.58	x	1.1320	=	1,699.13	
				Demolition	800.00	x	0.72	x	1.1320	=	652.03	
				for new walls, new addition, and soffits. Couple walls require double stacked 2x4 staggered A-602								
27	06 11 16 00 0062		SF	2" x 6" Wood Wall Framing At 16" On Center								$616.94
					Quantity		Unit Price		Factor		Total	
				Installation	250.00	x	2.18	x	1.1320	=	616.94	
				2x6 wall per plans								
28	06 11 16 00 0062	0004		For >200 To 500, Add								$101.88
					Quantity		Unit Price		Factor		Total	
				Installation	250.00	x	0.36	x	1.1320	=	101.88	
29	06 11 16 00 0063		SF	2" x 8" Wood Wall Framing At 16" On Center								$263.53
					Quantity		Unit Price		Factor		Total	
				Installation	80.00	x	2.91	x	1.1320	=	263.53	
				2x8 wall per plans								

Work Order Number: 116760.00
Work Order Title: Concord Unit 2956 Conversion

Section - 06

30	06 11 16 00 0063	0003		For Up To 200, Add									$86.94
			Installation		Quantity 80.00	x	Unit Price 0.96	x	Factor 1.1320	=	Total 86.94		
31	06 11 16 00 0179		LF	2" x 4" Pressure Treated Lumber, For Roofing Nailers									$871.64
			Installation		Quantity 250.00	x	Unit Price 3.08	x	Factor 1.1320	=	Total 871.64		
			for roof framing										
32	06 11 16 00 0183		LF	2" x 4" Pressure Treated Lumber, For Roofing Sleepers									$464.12
			Installation		Quantity 250.00	x	Unit Price 1.64	x	Factor 1.1320	=	Total 464.12		
			for roof framing										
33	06 16 33 00 0006		SF	3/4" Thick CDX Plywood Roof DeckingApplied to wood rafters.									$690.52
			Installation		Quantity 250.00	x	Unit Price 2.44	x	Factor 1.1320	=	Total 690.52		
			for new addition roof										
34	06 16 33 00 0006	0040		For Tongue And Groove, Add									$19.81
			Installation		Quantity 250.00	x	Unit Price 0.07	x	Factor 1.1320	=	Total 19.81		
35	06 16 33 00 0012		SF	1/2" Interior BC Plywood Wall SheathingApplied to wall studs.									$1,036.91
			Installation		Quantity 400.00	x	Unit Price 2.29	x	Factor 1.1320	=	Total 1,036.91		
			for new addition per plans										
36	06 16 33 00 0012	0005		For Shear Wall Construction, Add									$135.84
			Installation		Quantity 400.00	x	Unit Price 0.30	x	Factor 1.1320	=	Total 135.84		
37	06 16 33 00 0012	0006		For Exterior CC Grade Plywood, Add									$54.34
			Installation		Quantity 400.00	x	Unit Price 0.12	x	Factor 1.1320	=	Total 54.34		
38	06 16 33 00 0020		SF	3/4" CD Grade Plywood Floor DeckingApplied to floor or joists.									$5,169.71
			Installation		Quantity 1,564.00	x	Unit Price 2.36	x	Factor 1.1320	=	Total 4,178.26		
			Demolition		1,564.00	x	0.56	x	1.1320	=	991.45		
			for new floor decking per plans FSI/A-602. plans require glue										
39	06 16 33 00 0020	0038		For Exterior Glue, Add									$1,593.40
			Installation		Quantity 15,640.00	x	Unit Price 0.09	x	Factor 1.1320	=	Total 1,593.40		
40	06 41 13 00 0225		EA	15" Wide, 35" High x 23-3/4" Deep, Single Drawer and Single Door, Solid Wood Face Frame, Thermofoil Door and Drawer Front, Base Cabinet									$736.43
			Installation		Quantity 2.00	x	Unit Price 325.28	x	Factor 1.1320	=	Total 736.43		
			demolition of 1 kitchen and installation of 2 new kitchen cabinets per plans										
41	06 41 13 00 0225	0126		For Solid Wood Drawers, Dovetail Joints And Full Extension Drawer Guides, Add									$231.72
			Installation		Quantity 2.00	x	Unit Price 102.35	x	Factor 1.1320	=	Total 231.72		
42	06 41 13 00 0225	0130		For All Plywood Box Construction, Add									$241.55
			Installation		Quantity 2.00	x	Unit Price 106.69	x	Factor 1.1320	=	Total 241.55		

Work Order Number: 116760.00
Work Order Title: Concord Unit 2956 Conversion

Section - 06

43	06 41 13 00 0226		EA	18" Wide, 35" High x 23-3/4" Deep, Single Drawer and Single Door, Solid Wood Face Frame, Thermofoil Door and Drawer Front, Base Cabinet									$770.08
			Installation	Quantity 2.00	x	Unit Price 340.14	x	Factor 1.1320	=	Total 770.08			
				demolition of 1 kitchen and installation of 2 new kitchen cabinets per plans									
44	06 41 13 00 0226	0126		For Solid Wood Drawers, Dovetail Joints And Full Extension Drawer Guides, Add									$231.72
			Installation	Quantity 2.00	x	Unit Price 102.35	x	Factor 1.1320	=	Total 231.72			
45	06 41 13 00 0226	0130		For All Plywood Box Construction, Add									$241.55
			Installation	Quantity 2.00	x	Unit Price 106.69	x	Factor 1.1320	=	Total 241.55			
46	06 41 13 00 0228		EA	24" Wide, 35" High x 23-3/4" Deep, Single Drawer and Single Door, Solid Wood Face Frame, Thermofoil Door and Drawer Front, Base Cabinet									$460.91
			Installation	Quantity 1.00	x	Unit Price 407.16	x	Factor 1.1320	=	Total 460.91			
				demolition of 1 kitchen and installation of 2 new kitchen cabinets per plans									
47	06 41 13 00 0228	0126		For Solid Wood Drawers, Dovetail Joints And Full Extension Drawer Guides, Add									$115.86
			Installation	Quantity 1.00	x	Unit Price 102.35	x	Factor 1.1320	=	Total 115.86			
48	06 41 13 00 0228	0130		For All Plywood Box Construction, Add									$120.77
			Installation	Quantity 1.00	x	Unit Price 106.69	x	Factor 1.1320	=	Total 120.77			
49	06 41 13 00 0231		EA	33" Wide, 35" High x 23-3/4" Deep, Single Drawer and Double Door, Solid Wood Face Frame, Thermofoil Door and Drawer Front, Base Cabinet									$1,098.81
			Installation	Quantity 2.00	x	Unit Price 485.34	x	Factor 1.1320	=	Total 1,098.81			
				demolition of 1 kitchen and installation of 2 new kitchen cabinets per plans									
50	06 41 13 00 0231	0126		For Solid Wood Drawers, Dovetail Joints And Full Extension Drawer Guides, Add									$231.72
			Installation	Quantity 2.00	x	Unit Price 102.35	x	Factor 1.1320	=	Total 231.72			
51	06 41 13 00 0231	0130		For All Plywood Box Construction, Add									$241.55
			Installation	Quantity 2.00	x	Unit Price 106.69	x	Factor 1.1320	=	Total 241.55			
52	06 41 13 00 0232		EA	36" Wide, 35" High x 23-3/4" Deep, Single Drawer and Double Door, Solid Wood Face Frame, Thermofoil Door and Drawer Front, Base Cabinet									$1,133.00
			Installation	Quantity 2.00	x	Unit Price 500.44	x	Factor 1.1320	=	Total 1,133.00			
				demolition of 1 kitchen and installation of 2 new kitchen cabinets per plans									
53	06 41 13 00 0232	0126		For Solid Wood Drawers, Dovetail Joints And Full Extension Drawer Guides, Add									$231.72
			Installation	Quantity 2.00	x	Unit Price 102.35	x	Factor 1.1320	=	Total 231.72			
54	06 41 13 00 0232	0130		For All Plywood Box Construction, Add									$241.55
			Installation	Quantity 2.00	x	Unit Price 106.69	x	Factor 1.1320	=	Total 241.55			
55	06 41 13 00 0248		EA	15" Wide, 35" High x 23-3/4" Deep, Four Drawer Base, Solid Wood Face Frame and Thermofoil Drawer Fronts, Base Cabinet									$881.74
			Installation	Quantity 2.00	x	Unit Price 389.46	x	Factor 1.1320	=	Total 881.74			
				demolition of 1 kitchen and installation of 2 new kitchen cabinets per plans									

Work Order Number: 116760.00
Work Order Title: Concord Unit 2956 Conversion

Section - 06

56	06 41 13 00 0248	0129		For Solid Wood Drawers, Dovetail Joints And Full Extension Drawer Guides, Add										$926.86
			Installation	Quantity		Unit Price		Factor		Total				
				2.00	x	409.39	x	1.1320	=	926.86				
57	06 41 13 00 0248	0130		For All Plywood Box Construction, Add										$241.55
			Installation	Quantity		Unit Price		Factor		Total				
				2.00	x	106.69	x	1.1320	=	241.55				
58	06 41 13 00 0258		EA	33" Wide, 12" High x 12" Deep, Double Door, Solid Wood Face Frame and Thermofoil Doors, Wall Cabinet										$331.44
			Installation	Quantity		Unit Price		Factor		Total				
				1.00	x	292.79	x	1.1320	=	331.44				
				demolition of 1 kitchen and installation of 2 new kitchen cabinets per plans										
59	06 41 13 00 0258	0131		For All Plywood Box Construction, Add										$64.81
			Installation	Quantity		Unit Price		Factor		Total				
				1.00	x	57.25	x	1.1320	=	64.81				
60	06 41 13 00 0259		EA	36" Wide, 12" High x 12" Deep, Double Door, Solid Wood Face Frame and Thermofoil Doors, Wall Cabinet										$365.34
			Installation	Quantity		Unit Price		Factor		Total				
				1.00	x	322.74	x	1.1320	=	365.34				
				demolition of 1 kitchen and installation of 2 new kitchen cabinets per plans										
61	06 41 13 00 0259	0131		For All Plywood Box Construction, Add										$64.81
			Installation	Quantity		Unit Price		Factor		Total				
				1.00	x	57.25	x	1.1320	=	64.81				
62	06 41 13 00 0278		EA	30" Wide, 18" High x 12" Deep, Double Doors, Solid Wood Face Frame and Thermofoil Doors, Wall Cabinet										$722.69
			Installation	Quantity		Unit Price		Factor		Total				
				2.00	x	319.21	x	1.1320	=	722.69				
				demolition of 1 kitchen and installation of 2 new kitchen cabinets per plans										
63	06 41 13 00 0278	0131		For All Plywood Box Construction, Add										$129.61
			Installation	Quantity		Unit Price		Factor		Total				
				2.00	x	57.25	x	1.1320	=	129.61				
64	06 41 13 00 0282		EA	12" Wide, 30" High x 12" Deep, Single Door, Solid Wood Face Frame and Thermofoil Door, Wall Cabinet										$597.90
			Installation	Quantity		Unit Price		Factor		Total				
				2.00	x	264.09	x	1.1320	=	597.90				
				demolition of 1 kitchen and installation of 2 new kitchen cabinets per plans										
65	06 41 13 00 0282	0131		For All Plywood Box Construction, Add										$129.61
			Installation	Quantity		Unit Price		Factor		Total				
				2.00	x	57.25	x	1.1320	=	129.61				
66	06 41 13 00 0283		EA	15" Wide, 30" High x 12" Deep, Single Door, Solid Wood Face Frame and Thermofoil Door, Wall Cabinet										$325.62
			Installation	Quantity		Unit Price		Factor		Total				
				1.00	x	287.65	x	1.1320	=	325.62				
				demolition of 1 kitchen and installation of 2 new kitchen cabinets per plans										
67	06 41 13 00 0283	0131		For All Plywood Box Construction, Add										$64.81
			Installation	Quantity		Unit Price		Factor		Total				
				1.00	x	57.25	x	1.1320	=	64.81				
68	06 41 13 00 0283		EA	15" Wide, 30" High x 12" Deep, Single Door, Solid Wood Face Frame and Thermofoil Door, Wall Cabinet										$325.62
			Installation	Quantity		Unit Price		Factor		Total				
				1.00	x	287.65	x	1.1320	=	325.62				
				demolition of 1 kitchen and installation of 2 new kitchen cabinets per plans										

Contractor's Price Proposal - Detail Continues..

Work Order Number: 116760.00
Work Order Title: Concord Unit 2956 Conversion

Section - 06

69	06 41 13 00 0283	0131		For All Plywood Box Construction, Add								$64.81
			Installation	Quantity 1.00	x	Unit Price 57.25	x	Factor 1.1320	=	Total 64.81		
70	06 41 13 00 0284		EA	18" Wide, 30" High x 12" Deep, Single Door, Solid Wood Face Frame and Thermofoil Door, Wall Cabinet								$694.28
			Installation	Quantity 2.00	x	Unit Price 306.66	x	Factor 1.1320	=	Total 694.28		
				demolition of 1 kitchen and installation of 2 new kitchen cabinets per plans								
71	06 41 13 00 0284	0131		For All Plywood Box Construction, Add								$129.61
			Installation	Quantity 2.00	x	Unit Price 57.25	x	Factor 1.1320	=	Total 129.61		
72	06 41 13 00 0289		EA	33" Wide, 30" High x 12" Deep, Double Doors, Solid Wood Face Frame and Thermofoil Doors, Wall Cabinet								$974.72
			Installation	Quantity 2.00	x	Unit Price 430.53	x	Factor 1.1320	=	Total 974.72		
				demolition of 1 kitchen and installation of 2 new kitchen cabinets per plans								
73	06 41 13 00 0289	0131		For All Plywood Box Construction, Add								$129.61
			Installation	Quantity 2.00	x	Unit Price 57.25	x	Factor 1.1320	=	Total 129.61		
74	06 41 13 00 0329		EA	36" Wide, 84" High x 24" Deep, Four Doors, Solid Wood Face Frame and Thermofoil Doors, Pantry Cabinet								$1,462.41
			Installation	Quantity 1.00	x	Unit Price 1,291.88	x	Factor 1.1320	=	Total 1,462.41		
				demolition of 1 kitchen and installation of 2 new kitchen cabinets per plans								
75	06 41 13 00 0329	0132		For All Plywood Box Construction, Add								$239.58
			Installation	Quantity 1.00	x	Unit Price 211.64	x	Factor 1.1320	=	Total 239.58		
76	06 41 93 00 0007		EA	7" To 8-1/2", Flat Cabinet Pull Handle								$2,154.15
			Installation	Quantity 54.00	x	Unit Price 35.24	x	Factor 1.1320	=	Total 2,154.15		
				demolition of 1 kitchen and installation of 2 new kitchen cabinets per plans								

Subtotal for Section - 06 **$30,807.26**

Section - 07

77	07 21 16 00 0006		SF	5-1/2" Thick, Kraft Faced, R-21 Fiberglass Flexible Insulation								$19,505.18
			Installation	Quantity 8,284.00	x	Unit Price 1.72	x	Factor 1.1320	=	Total 16,129.28		
			Demolition	8,284.00	x	0.36	x	1.1320	=	3,375.90		
				removal of existing insulation and installation of new 6684 sqft of walls 1564 sqft of ceilings								
78	07 26 13 00 0010		CSF	Building Wrap (Tyvek)								$5,304.13
			Installation	Quantity 87.50	x	Unit Price 53.55	x	Factor 1.1320	=	Total 5,304.13		
				for new addition								
79	07 31 13 13 0004		SQ	230 LB/SQ, 5" Exposure, Three Tab Fiberglass Reinforced, Asphalt Composition Shingle (CertainTeed XT 30)								$7,409.79
			Installation	Quantity 25.00	x	Unit Price 261.83	x	Factor 1.1320	=	Total 7,409.79		
				new shingle roof for addition								

Contractor's Price Proposal - Detail Continues..

Work Order Number: 116760.00
Work Order Title: Concord Unit 2956 Conversion

Section - 07

80	07 34 00 00 0003		SQ	30 LB, Asphalt Saturated Organic Felt Roofing Underlayment, Mechanically Fastened								$1,416.70
			Installation		Quantity 25.00	x	Unit Price 50.06	x	Factor 1.1320	=	Total 1,416.70	
			new shingle roof for addition									
81	07 41 13 00 0026		LF	Eave Flashing For Aluminum Exposed Fastener Metal Roofing								$784.25
			Installation		Quantity 40.00	x	Unit Price 17.32	x	Factor 1.1320	=	Total 784.25	
			for new addition									
82	07 41 13 00 0026	0130		For Fluoropolymer (Kynar®) Coating, Add								$42.11
			Installation		Quantity 40.00	x	Unit Price 0.93	x	Factor 1.1320	=	Total 42.11	
83	07 62 13 00 0033		SF	22 Gauge, 0.034" Thick, Galvanized Steel Flashing								$4,149.91
			Installation		Quantity 300.00	x	Unit Price 12.22	x	Factor 1.1320	=	Total 4,149.91	
			flashing per plans for addition and 100 sqft for new windows									
84	07 62 13 00 0033	0080		For Wrap Around Window Panning, Add								$699.58
			Installation		Quantity 100.00	x	Unit Price 6.18	x	Factor 1.1320	=	Total 699.58	
85	07 71 23 00 0016		LF	6", 0.032" Thick, Box Style Aluminum Gutter								$429.88
			Installation		Quantity 25.00	x	Unit Price 15.19	x	Factor 1.1320	=	Total 429.88	
			rain gutter per plans									
86	07 71 23 00 0016	0322		For Up To 100', Add								$70.18
			Installation		Quantity 25.00	x	Unit Price 2.48	x	Factor 1.1320	=	Total 70.18	
87	07 71 23 00 0029		EA	6", Box Style Aluminum Gutter End Cap								$18.34
			Installation		Quantity 2.00	x	Unit Price 8.10	x	Factor 1.1320	=	Total 18.34	
			rain gutter per plans									
88	07 71 23 00 0055		LF	4" x 5", 0.019" Thick, Rectangular Aluminum Downspout								$102.67
			Installation		Quantity 10.00	x	Unit Price 9.07	x	Factor 1.1320	=	Total 102.67	
			rain gutter per plans									
89	07 71 23 00 0055	0325		For Up To 100', Add								$14.04
			Installation		Quantity 10.00	x	Unit Price 1.24	x	Factor 1.1320	=	Total 14.04	

Subtotal for Section - 07 **$39,946.76**

Section - 08

90	08 05 13 00 0041		EA	Factory Prepare Wood Door (Rated Or Non-Rated) For Mortise Lockset Hardware								$470.41
			Installation		Quantity 6.00	x	Unit Price 69.26	x	Factor 1.1320	=	Total 470.41	
			for all new doors. 1 front door, 2 bath, and 3 bedroom									

Work Order Number: 116760.00
Work Order Title: Concord Unit 2956 Conversion

Section - 08

91	08 14 16 00 0134	EA	3'-0" x 6'-8" x 1-3/4" Thick, 5 Ply, Hollow Core (HC), Birch Faced Wood Door									$2,910.85
				Quantity		Unit Price		Factor		Total		
			Installation	7.00	x	288.16	x	1.1320	=	2,283.38		
			Demolition	10.00	x	55.43	x	1.1320	=	627.47		
			Demo of 3 utility closet, 5 bedroom, and 2 bathroom doors. Installation of 2 utility closet, 3 bedroom, 2 bathroom doors.									
92	08 14 73 00 0074	EA	5' Wide, Two 2'-6" x 6'-8" x 1-3/8" Thick, Flush, Hollow Core (HC), Birch Faced Wood Bi-Pass Doors									$1,525.71
				Quantity		Unit Price		Factor		Total		
			Installation	3.00	x	396.94	x	1.1320	=	1,348.01		
			Demolition	2.00	x	78.49	x	1.1320	=	177.70		
			removal of 2 existing closet sliding doors, installation of 3 new closet sliding doors									
93	08 53 13 00 0549	EA	>110" To 120" UI, Horizontal Sliding Premium Vinyl Window (Pella 350)									$4,060.21
				Quantity		Unit Price		Factor		Total		
			Installation	5.00	x	631.42	x	1.1320	=	3,573.84		
			Demolition	6.00	x	71.61	x	1.1320	=	486.38		
			removal of 6 existing windows. Installation of 5 new windows per plans									
94	08 71 11 00 0004	PR	3-1/2" x 3-1/2" Standard Duty, Full Mortise, Plain Bearing, Brass/Bronze, Satin Chrome Finish Hinge									$652.61
				Quantity		Unit Price		Factor		Total		
			Installation	7.00	x	73.13	x	1.1320	=	579.48		
			Demolition	10.00	x	6.46	x	1.1320	=	73.13		
			Demo of 3 utility closet, 5 bedroom, and 2 bathroom doors. Installation of 2 utility closet, 3 bedroom, 2 bathroom doors.									
95	08 71 11 00 0005	PR	4" x 4" Standard Duty, Full Mortise, Plain Bearing, Brass/Bronze, Satin Chrome Finish Hinge									$136.35
				Quantity		Unit Price		Factor		Total		
			Installation	1.50	x	80.30	x	1.1320	=	136.35		
			for new front door per plans									
96	08 71 11 00 0513	EA	3" Projection, Residential Spring Type, Bright Brass Finish, Steel Wall Stop (Ives 63)									$130.43
				Quantity		Unit Price		Factor		Total		
			Installation	7.00	x	9.86	x	1.1320	=	78.13		
			Demolition	10.00	x	4.62	x	1.1320	=	52.30		
			per plans									
97	08 71 11 00 0655	EA	190 Degree Angle Of View, Bright Brass Finish, Brass One-Way Wide Angle Door Viewer (Ives U698)									$47.59
				Quantity		Unit Price		Factor		Total		
			Installation	1.00	x	42.04	x	1.1320	=	47.59		
			for new front door per plans									
98	08 71 11 00 2288	EA	Passage/Closet F01 Mortise LatchsetBoth sides always unlocked.									$1,471.62
				Quantity		Unit Price		Factor		Total		
			Installation	2.00	x	615.36	x	1.1320	=	1,393.18		
			Demolition	3.00	x	23.10	x	1.1320	=	78.45		
			Demo of 3 utility closet. Installation of 2 utility closet doors									
99	08 71 11 00 2289	EA	Bath/Bedroom Privacy F02/F19 Mortise LocksetLocked with thumb knob inside.									$4,323.67
				Quantity		Unit Price		Factor		Total		
			Installation	5.00	x	731.56	x	1.1320	=	4,140.63		
			Demolition	7.00	x	23.10	x	1.1320	=	183.04		
			Demo of 5 bedroom, and 2 bathroom doors. Installation of 3 bedroom, 2 bathroom doors.									

Contractor's Price Proposal - Detail Continues..

Work Order Number: 116760.00
Work Order Title: Concord Unit 2956 Conversion

Section - 08

100	08 71 11 00 2293		EA	Entrance F08 Mortise LocksetLocked with key outside and thumb knob inside.								$960.13
					Quantity		Unit Price		Factor		Total	
				Installation	1.00	x	848.17	x	1.1320	=	960.13	
				for new front door per plans								
101	08 71 11 00 2293	0263		For Satin Brass Clear Coat US4 (BHMA 606) Finish, Add								$42.78
					Quantity		Unit Price		Factor		Total	
				Installation	1.00	x	37.79	x	1.1320	=	42.78	
102	08 72 33 00 0155		LF	3/8" x 3/16", Silicon Compression Bulb, Adhesive Backed Perimeter Gasketing Weather-Strip (Pemko PK33)								$63.89
					Quantity		Unit Price		Factor		Total	
				Installation	17.00	x	3.32	x	1.1320	=	63.89	
				for new front door per plans								
103	08 72 43 00 0011		LF	6" Width, 1/4" Height, Aluminum Saddle Threshold (Pemko 272A)								$125.07
					Quantity		Unit Price		Factor		Total	
				Installation	3.00	x	36.83	x	1.1320	=	125.07	
				for new front door per plans								
104	08 72 43 00 0011	0458		For Color Anodized Finish, Add								$16.33
					Quantity		Unit Price		Factor		Total	
				Installation	3.00	x	4.81	x	1.1320	=	16.33	

Subtotal for Section - 08 **$16,937.65**

Section - 09

105	09 05 71 00 0002		SF	5 Mil Tile And Stone Acoustical Underlayment (EasyMat)								$6,391.32
					Quantity		Unit Price		Factor		Total	
				Installation	1,564.00	x	3.61	x	1.1320	=	6,391.32	
				acousthmat underlayment per plans FSI/A-602								
106	09 05 71 00 0005		SF	2 MM Thick Resilient Plank Floor Acoustical Underlayment (Floormuffler)								$2,637.97
					Quantity		Unit Price		Factor		Total	
				Installation	1,564.00	x	1.49	x	1.1320	=	2,637.97	
				closest LI to gypsum sanded floor underlayment per plans FSI/A-602								
107	09 22 13 23 0008		SF	25 Gauge, 16" On Center, Installed On Walls, Double-Leg Resilient Channel, RC2 Furring Channel								$2,604.73
					Quantity		Unit Price		Factor		Total	
				Installation	650.00	x	3.54	x	1.1320	=	2,604.73	
				Resilient channel per plans A-602								
108	09 22 13 23 0010		SF	25 Gauge, 16" On Center, Installed On Ceilings, Double-Leg Resilient Channel, RC2 Furring Channel								$7,418.18
					Quantity		Unit Price		Factor		Total	
				Installation	1,564.00	x	4.19	x	1.1320	=	7,418.18	
				Resilient channel per plans FSI/A-602								
109	09 22 36 23 0005		SF	3.4 LB/SY, Installed On Studs Or Furred Walls, Flat Diamond, Expanded Metal Lath								$3,022.16
					Quantity		Unit Price		Factor		Total	
				Installation	875.00	x	2.53	x	1.1320	=	2,505.97	
				Demolition	800.00	x	0.57	x	1.1320	=	516.19	
				removal of existing stucco and installation of new for new addition and new front entrance								

Work Order Number: 116760.00
Work Order Title: Concord Unit 2956 Conversion

Section - 09

110	09 24 23 00 0002		SF	Scratch/Brown/Finish, Three Coat Troweled StuccoExcludes lath and felt. Interior or exterior, one side.								$10,885.03
					Quantity		Unit Price		Factor		Total	
				Installation	875.00	x	8.53	x	1.1320	=	8,448.97	
				Demolition	800.00	x	2.69	x	1.1320	=	2,436.06	
				removal of existing stucco and installation of new for new addition and new front entrance								
111	09 24 23 00 0004		SF	Scratch/Finish, Two Coat Troweled StuccoExcludes lath and felt. Interior or exterior, one side.								$6,763.70
					Quantity		Unit Price		Factor		Total	
				Installation	875.00	x	5.64	x	1.1320	=	5,586.42	
				Demolition	800.00	x	1.30	x	1.1320	=	1,177.28	
				removal of existing stucco and installation of new for new addition and new front entrance								
112	09 24 23 00 0005		SF	Finish Coat Troweled StuccoExcludes lath and felt. Interior or exterior, one side.								$4,373.48
					Quantity		Unit Price		Factor		Total	
				Installation	875.00	x	3.62	x	1.1320	=	3,585.61	
				Demolition	800.00	x	0.87	x	1.1320	=	787.87	
				removal of existing stucco and installation of new for new addition and new front entrance								
113	09 29 10 00 0006		SF	5/8" Gypsum Board								$14,191.84
					Quantity		Unit Price		Factor		Total	
				Installation	8,248.00	x	1.52	x	1.1320	=	14,191.84	
				for walls and ceilings per plans								
114	09 29 10 00 0038		SF	Up To 10' High, Walls, Tape, Spackle And Finish Gypsum Board								$4,464.11
					Quantity		Unit Price		Factor		Total	
				Installation	6,684.00	x	0.59	x	1.1320	=	4,464.11	
				for walls								
115	09 29 10 00 0038	0048		For ASTM C840 Level 5 High Quality Finish, Add								$3,329.17
					Quantity		Unit Price		Factor		Total	
				Installation	6,684.00	x	0.44	x	1.1320	=	3,329.17	
116	09 29 10 00 0041		SF	Up To 10' High, Ceilings, Tape, Spackle And Finish Gypsum Board								$1,363.25
					Quantity		Unit Price		Factor		Total	
				Installation	1,564.00	x	0.77	x	1.1320	=	1,363.24	
				for ceilings								
117	09 29 10 00 0041	0048		For ASTM C840 Level 5 High Quality Finish, Add								$10,091.55
					Quantity		Unit Price		Factor		Total	
				Installation	15,640.00	x	0.57	x	1.1320	=	10,091.55	
118	09 29 10 00 0044		LF	Up To 10' High, Vertical Corners, Tape, Spackle And Finish Gypsum Board								$1,651.00
					Quantity		Unit Price		Factor		Total	
				Installation	1,236.00	x	1.18	x	1.1320	=	1,651.00	
				walls: 150 vertical corners @ 8' throughout both floors. windows: 36 LF of vertical corners								
119	09 29 10 00 0044	0048		For ASTM C840 Level 5 High Quality Finish, Add								$1,217.26
					Quantity		Unit Price		Factor		Total	
				Installation	1,236.00	x	0.87	x	1.1320	=	1,217.26	
120	09 29 10 00 0047		LF	Up To 10' High, Horizontal Corners, Tape, Spackle And Finish Gypsum Board								$1,209.66
					Quantity		Unit Price		Factor		Total	
				Installation	780.00	x	1.37	x	1.1320	=	1,209.66	
				750 LF of walls and 30 LF of windows								

Work Order Number: 116760.00
Work Order Title: Concord Unit 2956 Conversion

Section - 09

121	09 29 10 00 0047	0048		For ASTM C840 Level 5 High Quality Finish, Add								$891.79
			Installation	Quantity 780.00	x	Unit Price 1.01	x	Factor 1.1320	=	Total 891.79		
122	09 29 10 00 0051		LF	Corner Bead, Galvanized Steel For Gypsum Board								$7,508.15
			Installation	Quantity 2,016.00	x	Unit Price 3.29	x	Factor 1.1320	=	Total 7,508.15		
			walls: 150 vertical corners @ 8' throughout both floors. 750 LF of horizontal corners Windows: 86 LF									
123	09 65 13 13 0003		LF	4" High, 1/8" Thick, Type TV Thermoplastic Vinyl Wall Base, All Colors								$2,844.15
			Installation	Quantity 750.00	x	Unit Price 3.35	x	Factor 1.1320	=	Total 2,844.15		
			750 LF of walls									
124	09 65 23 00 0004		SF	0.16" Overall Thickness, 0.020" Wear Layer, Vinyl Plank Flooring (Armstrong® Luxe Plank™)								$16,907.78
			Installation	Quantity 1,564.00	x	Unit Price 9.55	x	Factor 1.1320	=	Total 16,907.78		
			new flooring throughout per plans									
125	09 91 13 00 0095		SF	1 Coat Primer, Brush/Roller Work, Paint Exterior Stucco Walls								$1,236.14
			Installation	Quantity 1,400.00	x	Unit Price 0.78	x	Factor 1.1320	=	Total 1,236.14		
			paint front and side of building for affected areas corner to corner									
126	09 91 13 00 0097		SF	2 Coats Paint, Brush/Roller Work, Paint Exterior Stucco Walls								$2,599.07
			Installation	Quantity 1,400.00	x	Unit Price 1.64	x	Factor 1.1320	=	Total 2,599.07		
			paint front and side of building for affected areas corner to corner									
127	09 91 23 00 0067		SF	1 Coat Primer, Brush/Roller Work, Paint Interior Plaster/Drywall Walls								$4,161.46
			Installation	Quantity 6,684.00	x	Unit Price 0.55	x	Factor 1.1320	=	Total 4,161.46		
			for walls									
128	09 91 23 00 0069		SF	2 Coats Paint, Brush/Roller Work, Paint Interior Plaster/Drywall Walls								$8,322.92
			Installation	Quantity 6,684.00	x	Unit Price 1.10	x	Factor 1.1320	=	Total 8,322.92		
			for walls									
129	09 91 23 00 0161		SF	1 Coat Primer, Brush/Roller Work, Paint Interior Drywall/Plaster Ceiling								$1,150.79
			Installation	Quantity 1,564.00	x	Unit Price 0.65	x	Factor 1.1320	=	Total 1,150.79		
			for ceilings									
130	09 91 23 00 0163		SF	2 Coats Paints, Brush/Roller Work, Paint Interior Drywall/Plaster Ceiling								$2,071.42
			Installation	Quantity 1,564.00	x	Unit Price 1.17	x	Factor 1.1320	=	Total 2,071.42		
			for ceilings									
131	09 91 23 00 0252		LF	1 Coat Primer, Brush/Roller Work, Paint Interior Wood Door Frame And Trim								$570.53
			Installation	Quantity 600.00	x	Unit Price 0.84	x	Factor 1.1320	=	Total 570.53		
			15 total doors. 40 LF of trim per door									
132	09 91 23 00 0254		LF	2 Coats Paint, Brush/Roller Work, Paint Interior Wood Door Frame And Trime								$1,249.73
			Installation	Quantity 600.00	x	Unit Price 1.84	x	Factor 1.1320	=	Total 1,249.73		
			15 total doors. 40 LF of trim per door									

Contractor's Price Proposal - Detail Continues..

Work Order Number: 116760.00
Work Order Title: Concord Unit 2956 Conversion

Section - 09

133	09 91 23 00 0275	EA	1 Coat Primer, Brush/Roller Work, Both Faces, Paint Interior Wood Door								$1,153.96
				Quantity		Unit Price		Factor		Total	
			Installation	15.00	x	67.96	x	1.1320	=	1,153.96	
			8 doors on first floor 7 doors on second floor								
134	09 91 23 00 0277	EA	2 Coats Paint, Brush/Roller Work, Both Faces, Paint Interior Wood Door								$2,072.58
				Quantity		Unit Price		Factor		Total	
			Installation	15.00	x	122.06	x	1.1320	=	2,072.58	
			8 doors on first floor 7 doors on second floor								
135	09 91 23 00 0307	LF	1 Coat Primer, Brush/Roller Work, Paint Interior Wood Window Frame And Trim								$163.73
				Quantity		Unit Price		Factor		Total	
			Installation	128.00	x	1.13	x	1.1320	=	163.73	
			8 windows with 128 LF of trim								
136	09 91 23 00 0309	LF	2 Coats Paint, Brush/Roller Work, Paint Interior Wood Window Frame And Trim								$357.89
				Quantity		Unit Price		Factor		Total	
			Installation	128.00	x	2.47	x	1.1320	=	357.89	
			8 windows with 128 LF of trim								
137	09 91 23 00 0350	LF	1 Coat Primer, Brush Work, Paint Interior Wood Trim To 6" Wide								$492.42
				Quantity		Unit Price		Factor		Total	
			Installation	750.00	x	0.58	x	1.1320	=	492.42	
			750 LF of baseboards								
138	09 91 23 00 0352	LF	2 Coats Paint, Paint Interior Wood Trim to 6" Wide								$1,120.68
				Quantity		Unit Price		Factor		Total	
			Installation	750.00	x	1.32	x	1.1320	=	1,120.68	
			750 LF of baseboards								

Subtotal for Section - 09 **$136,489.60**

Section - 10

139	10 28 13 13 0045	EA	Single Roll, Surface Mounted, Stainless Steel, Satin Finish, Toilet Tissue Dispenser (Bobrick B-6857)								$123.83
				Quantity		Unit Price		Factor		Total	
			Installation	1.00	x	88.61	x	1.1320	=	100.31	
			Demolition	1.00	x	20.78	x	1.1320	=	23.52	
			per plans								
140	10 28 13 13 0170	EA	36" Length, 1-1/2" Diameter, Stainless Steel Grab Bar (Bobrick B-6806x36)								$311.68
				Quantity		Unit Price		Factor		Total	
			Installation	3.00	x	91.78	x	1.1320	=	311.68	
			per plans								
141	10 28 13 13 0171	EA	42" Length, 1-1/2" Diameter, Stainless Steel Grab Bar (Bobrick B-6806x42)								$106.14
				Quantity		Unit Price		Factor		Total	
			Installation	1.00	x	93.76	x	1.1320	=	106.14	
			per plans								
142	10 28 13 13 0217	EA	Telescoping 60" To 72" Length, 20-Gauge, 1" Diameter, Stainless Steel Curved Shower Rod With Concealed Mounting (Kohler Expanse K-9349)								$158.19
				Quantity		Unit Price		Factor		Total	
			Installation	1.00	x	118.96	x	1.1320	=	134.66	
			Demolition	1.00	x	20.78	x	1.1320	=	23.52	
			per plans								

Contractor's Price Proposal - Detail Continues..

Work Order Number: 116760.00
Work Order Title: Concord Unit 2956 Conversion

Section - 10

143	10 28 13 13 0322	EA	24" Length, 3/4" Diameter, Stainless Steel Towel Bar (Bobrick B-674)									$133.36
				Quantity		Unit Price		Factor		Total		
			Installation	1.00	x	97.03	x	1.1320	=	109.84		
			Demolition	1.00	x	20.78	x	1.1320	=	23.52		
			per plans									
144	10 28 13 13 0390	EA	20" x 26", Surface Mounted, Aluminum Medicine Cabinet (Kohler K-CB)									$817.76
				Quantity		Unit Price		Factor		Total		
			Installation	1.00	x	676.23	x	1.1320	=	765.49		
			Demolition	1.00	x	46.17	x	1.1320	=	52.26		
			per plans									

Subtotal for Section - 10 **$1,650.96**

Section - 11

145	11 30 13 13 0010	EA	30" Gas Range With Oven									$2,325.17
				Quantity		Unit Price		Factor		Total		
			Installation	2.00	x	985.73	x	1.1320	=	2,231.69		
			Demolition	1.00	x	82.58	x	1.1320	=	93.48		
			remove and save existing for clients attic stock. Installation of 2 new.									
146	11 30 13 13 0015	EA	30" Venting Range Hood (Broan 40000)									$619.32
				Quantity		Unit Price		Factor		Total		
			Installation	2.00	x	242.58	x	1.1320	=	549.20		
			Demolition	1.00	x	61.94	x	1.1320	=	70.12		
			removal of existing and installation of 2 new									
147	11 30 13 13 0048	EA	>16 To 18 CF Top Freezer Refrigerator									$2,550.65
				Quantity		Unit Price		Factor		Total		
			Installation	2.00	x	1,105.96	x	1.1320	=	2,503.89		
			Demolition	1.00	x	41.30	x	1.1320	=	46.75		
			remove and save existing for clients attic stock. Installation of 2 new.									
148	11 30 13 13 0084	EA	1/3 HP Insulated Garbage Disposal (GE GFC320V)									$636.07
				Quantity		Unit Price		Factor		Total		
			Installation	2.00	x	249.98	x	1.1320	=	565.95		
			Demolition	1.00	x	61.94	x	1.1320	=	70.12		
			removal o existing and installation of new									

Subtotal for Section - 11 **$6,131.21**

Section - 12

149	12 36 61 19 0005	SF	1-1/4" Thick, Quartz Agglomerate Countertop With Backsplash									$6,914.26
				Quantity		Unit Price		Factor		Total		
			Installation	50.00	x	122.16	x	1.1320	=	6,914.26		
			25 LF of kitchen countertops									
150	12 36 61 19 0007	EA	Cutout For Sink And/Or Faucet In Quartz Agglomerate Countertop									$313.61
				Quantity		Unit Price		Factor		Total		
			Installation	2.00	x	138.52	x	1.1320	=	313.61		
			2 kitchen sinks									

Subtotal for Section - 12 **$7,227.87**

Section - 22

Work Order Number: 116760.00
Work Order Title: Concord Unit 2956 Conversion

Section - 22

151	22 01 40 81 0004	EA	Removal And Replacement Of Chrome Supply Lines To Sink/Lavatory, Pair								$297.60
				Quantity		Unit Price		Factor		Total	
			Installation	10.00	x	26.29	x	1.1320	=	297.60	
			replace supply lines in kitchens and bathrooms								
152	22 01 40 81 0006	EA	Removal And Replacement Of Double Bowl Sink/Lavatory Drain Line								$128.73
				Quantity		Unit Price		Factor		Total	
			Installation	2.00	x	56.86	x	1.1320	=	128.73	
			new drain lines								
153	22 11 16 00 0003	LF	3/4" Schedule 40 Threaded Galvanized Steel Pipe With 150 LB Malleable Iron Fitting AssemblyIncludes all hangers and all galvanized malleable iron fittings (couplings, elbows, tees and reducer fittings). All hangers are complete assemblies. Not for use where detail is available.								$7,127.07
				Quantity		Unit Price		Factor		Total	
			Installation	300.00	x	18.30	x	1.1320	=	6,214.68	
			Demolition	200.00	x	4.03	x	1.1320	=	912.39	
			gas line piping								
154	22 11 16 00 0901	LF	3/4" Inside Diameter Copper Pipe/Tubing Type L AssemblyIncludes all hangers and couplings, elbow, tee, reducer fittings. All hangers are complete assemblies. Not for use where detail is available.								$19,234.38
				Quantity		Unit Price		Factor		Total	
			Installation	650.00	x	24.17	x	1.1320	=	17,784.29	
			Demolition	350.00	x	3.66	x	1.1320	=	1,450.09	
			water line copper piping								
155	22 12 23 13 0002	EA	80 Gallon ASME Rated Tank, 150PSI, Jacketed, Insulated, Glass Lined Water Heater Storage Tank (TJ-80A)								$424.28
				Quantity		Unit Price		Factor		Total	
			Installation	0.00	x	2,141.02	x	1.1320	=	0.00	
			Demolition	1.00	x	374.81	x	1.1320	=	424.28	
			removal of existing water heater								
156	22 13 16 00 0509	LF	4" Schedule 40 Polyvinyl Chloride (PVC) DWV Pipe AssemblyIncludes all fittings, couplings and hangers. Fittings are assumed every 10'. Not for use where detail is available.								$20,147.62
				Quantity		Unit Price		Factor		Total	
			Installation	400.00	x	39.47	x	1.1320	=	17,872.02	
			Demolition	275.00	x	7.31	x	1.1320	=	2,275.60	
			Sewer and vent piping								
157	22 34 13 00 0011	EA	7.4 GPM, Outdoor Mount, Instantaneous, Tankless, Gas Domestic Water Heater (Rheem RTG-74XN)								$5,196.24
				Quantity		Unit Price		Factor		Total	
			Installation	2.00	x	2,295.16	x	1.1320	=	5,196.24	
			installation of 2 new water heaters								
158	22 41 16 16 0003	EA	33" x 21" x 6-1/2" Stainless Steel Kitchen Sink, Double Bowl, 20 Gauge (Elkay D233213)								$1,488.27
				Quantity		Unit Price		Factor		Total	
			Installation	2.00	x	607.23	x	1.1320	=	1,374.77	
			Demolition	1.00	x	100.27	x	1.1320	=	113.51	
			removal of existing and installation of new.								
159	22 41 39 00 0006	EA	Chrome Two Handle Kitchen Faucet With Spray, Three Hole Installation, 8" Center (Delta 2402LF-LHP+H215)								$454.33
				Quantity		Unit Price		Factor		Total	
			Installation	2.00	x	177.25	x	1.1320	=	401.29	
			Demolition	1.00	x	46.85	x	1.1320	=	53.03	
			removal of existing and installation of new.								

Contractor's Price Proposal - Detail Continues..

Work Order Number: 116760.00
Work Order Title: Concord Unit 2956 Conversion

Section - 22

160	22 42 13 13 0027	EA	2 Piece Tank Type, Pressure Assisted, Siphon Jet, Floor Mounted, Back Outlet, Handicap Accessible, Elongated Vitreous China Water Closet (American Standard Yorkville™ ADA)								$1,300.36
				Quantity		Unit Price		Factor		Total	
			Installation	1.00	x	1,051.28	x	1.1320	=	1,190.05	
			Demolition	1.00	x	97.45	x	1.1320	=	110.31	
			remove existing and install new ADA toilet								
161	22 42 16 13 0009	EA	27" x 20" Wheelchair Accessible, Vitreous China Wall Hung Lavatory (American Standard Wheel Chair Users)								$776.98
				Quantity		Unit Price		Factor		Total	
			Installation	1.00	x	623.60	x	1.1320	=	705.92	
			Demolition	1.00	x	62.78	x	1.1320	=	71.07	
			remove existing and install new ADA sink, faucet, and drain cover.								
162	22 42 19 00 0027	EA	3 Piece Tub/Shower Surrounds, 32" x 72" Side Walls, 48" x 72" Back, (Swanstone SK-324872)								$3,166.32
				Quantity		Unit Price		Factor		Total	
			Installation	1.00	x	2,797.10	x	1.1320	=	3,166.32	
			new tub/shower for ADA bathroom								
163	22 42 39 00 0042	EA	Single Supply EcoPower® Faucet, Polished Chrome Finish (Toto TEL3LS10#CP)								$709.36
				Quantity		Unit Price		Factor		Total	
			Installation	1.00	x	626.64	x	1.1320	=	709.36	
			ADA sink, faucet, and drain cover.								
164	22 42 39 00 0064	EA	Three Lever Handle, Chrome Shower And Tub Filler (American Standard Colony Soft 3375.502)								$293.63
				Quantity		Unit Price		Factor		Total	
			Installation	1.00	x	218.72	x	1.1320	=	247.59	
			Demolition	1.00	x	40.67	x	1.1320	=	46.04	
			per plans								
165	22 42 39 00 0210	EA	Lavatory Protective Enclosure (IPS Truebro Lav Shield)								$350.49
				Quantity		Unit Price		Factor		Total	
			Installation	2.00	x	154.81	x	1.1320	=	350.49	
			drain cover for ADA kitchen and bathroom sink								
166	22 42 39 00 0217	EA	1/2" NPT x 3/8" Compression Chrome, Quarter Turn Dual Angle Stop (SharkBite 25558)								$555.72
				Quantity		Unit Price		Factor		Total	
			Installation	10.00	x	41.22	x	1.1320	=	466.61	
			Demolition	8.00	x	9.84	x	1.1320	=	89.11	
			new angle stops installed in bathrooms and kitchens								

Subtotal for Section - 22 **$61,651.38**

Section - 23

167	23 05 93 00 0017	EA	Balancing HVAC Duct System, Floor Height Supply, Return, Exhaust, Register And Diffuser								$61.88
				Quantity		Unit Price		Factor		Total	
			Installation	1.00	x	54.66	x	1.1320	=	61.88	
			required setup, balancing, and charging for new system								
168	23 09 23 53 0284	EA	Scheduling Program, HVAC (AHU, RTU, AC Units, Etcetera) Programming Measures								$3,880.60
				Quantity		Unit Price		Factor		Total	
			Installation	1.00	x	3,428.09	x	1.1320	=	3,880.60	
			required setup, balancing, and charging for new system								

Work Order Number: 116760.00
Work Order Title: Concord Unit 2956 Conversion

Section - 23

169	23 31 13 16 0063	EA	4" Diameter, 26 Gauge, 2" WG And Less (Class C), Galvanized Sheet Metal Round And Flat-Oval Connector									$240.41
				Quantity		Unit Price		Factor		Total		
			Installation	14.00	x	15.17	x	1.1320	=	240.41		
			exhaust ducting for dyer per plans									
170	23 33 13 13 0006	EA	12" Diameter Radial Opposed Blade Damper Round, Steel Construction, Manual Operated									$140.78
				Quantity		Unit Price		Factor		Total		
			Installation	1.00	x	113.45	x	1.1320	=	128.43		
			Demolition	1.00	x	10.91	x	1.1320	=	12.35		
			HVAC per plans									
171	23 33 46 00 0008	LF	12" Diameter Flexible Duct, R8.0 Insulated With Polyester Inner Liner And Metallized Outer Jacket									$2,231.74
				Quantity		Unit Price		Factor		Total		
			Installation	100.00	x	15.36	x	1.1320	=	1,738.75		
			Demolition	130.00	x	3.35	x	1.1320	=	492.99		
			HVAC per plans									
172	23 33 46 00 0020	EA	12" Diameter Flexible Duct Collar, Spin In Type, Sheet Metal, With Damper									$100.97
				Quantity		Unit Price		Factor		Total		
			Installation	1.00	x	76.62	x	1.1320	=	86.73		
			Demolition	1.00	x	12.58	x	1.1320	=	14.24		
			HVAC per plans									
173	23 34 16 00 0127	EA	30" Diameter Wheel, 2 HP, 10,192 CFM At 1/4" Static Pressure, Belt Drive, Kitchen Upblast Exhaust Fan115/208-230/60/3. Includes heat baffle, grease baffle and disconnect switch.									$9,622.60
				Quantity		Unit Price		Factor		Total		
			Installation	2.00	x	4,153.39	x	1.1320	=	9,403.27		
			Demolition	1.00	x	193.75	x	1.1320	=	219.33		
			removal of one existing and installation of 2 new									
174	23 34 16 00 0275	EA	109 CFM, Ceiling/Wall Mounted, Metal Intake Grille, Heavy Duty/Continuous Operation Exhaust Fan (Broan® LoSone® Ventilator L100MG)									$897.54
				Quantity		Unit Price		Factor		Total		
			Installation	2.00	x	379.30	x	1.1320	=	858.74		
			Demolition	1.00	x	34.28	x	1.1320	=	38.80		
			exhaust fan per plans EF-1									
175	23 37 13 13 0080	EA	20" x 20" Single Deflection Return/Exhaust Register, Aluminum, Opposed Blade Damper, Wall/Ceiling									$319.70
				Quantity		Unit Price		Factor		Total		
			Installation	1.00	x	265.64	x	1.1320	=	300.70		
			Demolition	1.00	x	16.78	x	1.1320	=	18.99		
			HVAC per plans									
176	23 37 13 13 0225	EA	18" x 8" 4-Way Adjustable Wall Supply Grille, Adjustable Deflection, Aluminum Construction									$2,395.67
				Quantity		Unit Price		Factor		Total		
			Installation	7.00	x	275.90	x	1.1320	=	2,186.23		
			Demolition	11.00	x	16.82	x	1.1320	=	209.44		
			HVAC per plans									
177	23 54 16 13 0007	EA	120 MBH, 2,000 CFM Up/Horizontal Flow Multi-Speed, Two Stage 96% AFUE Gas FurnaceBlower cooling capacity up to 5 tons.									$5,879.99
				Quantity		Unit Price		Factor		Total		
			Installation	2.00	x	2,597.17	x	1.1320	=	5,879.99		
			per plans. SH-1 and SH-2 wall mounted furnaces									

Work Order Number: 116760.00
Work Order Title: Concord Unit 2956 Conversion

Section - 23

178	23 81 49 00 0020	EA	7-1/2 Ton Indoor Section Split Heat Pump Packaged Unit, Horizontal Upflow With 10 KW Electric Heat									$4,932.97
				Quantity		Unit Price		Factor		Total		
			Installation	1.00	x	4,047.74	x	1.1320	=	4,582.04		
			Demolition	1.00	x	310.01	x	1.1320	=	350.93		
			new furnace per clients request									

Subtotal for Section - 23 **$30,704.85**

Section - 26

179	26 01 20 91 0002	EA	Lock Out/Tag Out Local DisconnectExcludes tag or padlock See CSI section 26 01 20 91-0004 for padlock, 26 01 20 91-0005 for tag(s).									$523.83
				Quantity		Unit Price		Factor		Total		
			Installation	15.00	x	30.85	x	1.1320	=	523.83		
			LOTO of existing circuits									
180	26 05 19 16 0402	MLF	#12 AWG, 3 Conductors, 600 Volt, Type NM, Copper, Non-Metallic Sheathed Cable									$12,214.42
				Quantity		Unit Price		Factor		Total		
			Installation	4.00	x	2,697.53	x	1.1320	=	12,214.42		
			for new electrical runs per plans									
181	26 05 19 16 0402	0377	For Installation In Wood Stud Wall (Includes Drilling), Add									$1,272.82
				Quantity		Unit Price		Factor		Total		
			Installation	4.00	x	281.10	x	1.1320	=	1,272.82		
182	26 09 23 00 0109	EA	Wall Switch Replacement Occupancy Sensor, Single GangIncludes integral occupancy sensor and relay.									$1,204.00
				Quantity		Unit Price		Factor		Total		
			Installation	10.00	x	106.36	x	1.1320	=	1,204.00		
			per plans									
183	26 09 23 00 0235	EA	Passive Infrared, Wall Switch Mounted, Wired Occupancy Sensor (Encelium PW-100-24)Excludes GB II cable.									$586.31
				Quantity		Unit Price		Factor		Total		
			Installation	2.00	x	258.97	x	1.1320	=	586.31		
			for bathrooms									
184	26 24 13 00 0213	EA	800 Amperes, 480 Volt, 4 Wire, Switchboard Incoming No Switch Circuit									$5,781.11
				Quantity		Unit Price		Factor		Total		
			Installation	1.00	x	4,332.49	x	1.1320	=	4,904.38		
			Demolition	1.00	x	774.50	x	1.1320	=	876.73		
			for new main panel to new units subpanels									
185	26 24 16 00 0470	EA	200 Ampere Rating, Main Breaker, Indoor, 42 Circuit, 4 Wire, 120/208 Volt, Assembled Panelboard With 20 Ampere, 1 Pole Plug-In Breakers									$7,931.90
				Quantity		Unit Price		Factor		Total		
			Installation	2.00	x	3,075.97	x	1.1320	=	6,964.00		
			Demolition	1.00	x	855.04	x	1.1320	=	967.91		
			1 new sub panel for each unit									
186	26 27 13 00 0125	EA	Single Phase M-90 Meter, Socket, NEMA 3R Enclosure									$6,442.28
				Quantity		Unit Price		Factor		Total		
			Installation	6.00	x	905.76	x	1.1320	=	6,151.92		
			Demolition	5.00	x	51.30	x	1.1320	=	290.36		
			installation of new meters for building									
187	26 27 26 00 0009	EA	20 Amperes, 1 Gang, GFI, Duplex Receptacle Assembly									$3,825.42
				Quantity		Unit Price		Factor		Total		
			Installation	30.00	x	96.40	x	1.1320	=	3,273.74		
			Demolition	15.00	x	32.49	x	1.1320	=	551.68		
			All new GFI outlets throughout per clients request									

Contractor's Price Proposal - Detail Continues..

Work Order Number: 116760.00
Work Order Title: Concord Unit 2956 Conversion

Section - 26

188	26 27 26 00 0125		EA	20 Amperes, 125 Volt Single Specification Grade Tamper Resistant ReceptaclePass & Seymour TR5351.									$1,944.32
					Quantity		Unit Price		Factor		Total		
				Installation	40.00	x	34.39	x	1.1320	=	1,557.18		
				Demolition	40.00	x	8.55	x	1.1320	=	387.14		
				all new outlets throughout per clients request									
189	26 27 26 00 0138		EA	1 Gang, 20 Amperes, 120/277 Volt, SPST, Switch Assembly									$3,327.23
					Quantity		Unit Price		Factor		Total		
				Installation	25.00	x	85.08	x	1.1320	=	2,407.76		
				Demolition	25.00	x	32.49	x	1.1320	=	919.47		
				25 switches total in both units									
190	26 51 19 00 0312		EA	8" Diameter, 1,200 Lumens, Recessed LED Downlight With Open Trim (Lithonia DOM8 LED)									$7,780.09
					Quantity		Unit Price		Factor		Total		
				Installation	19.00	x	324.11	x	1.1320	=	6,970.96		
				Demolition	19.00	x	37.62	x	1.1320	=	809.13		
				19 new slim LED lights per plans and owners request									
191	26 51 19 00 0312	0543	EA	For Dimming Driver And Sensor Switch nLight Dimming Relay, Add									$1,339.77
					Quantity		Unit Price		Factor		Total		
				Installation	17.00	x	69.62	x	1.1320	=	1,339.77		
192	26 51 19 00 0430		EA	5" Shallow, Insulated Ceiling, Air-Tite New Construction (Cooper Halo H25ICAT)									$314.84
					Quantity		Unit Price		Factor		Total		
				Installation	3.00	x	92.71	x	1.1320	=	314.84		
				3 new 5" slim LED lights per plans									
193	26 51 19 00 0470		EA	2-1/2" Diameter x 15-1/2" High, Polished Nickel, LED Wall Sconce (Hudson Valley Lighting SHAW 1200-PN)									$1,017.22
					Quantity		Unit Price		Factor		Total		
				Installation	2.00	x	415.10	x	1.1320	=	939.79		
				Demolition	2.00	x	34.20	x	1.1320	=	77.43		
				2 new wall sconces per plans in bathrooms									
194	26 56 19 00 0031		EA	9,503 Lumens, 77 Watt, 3 LEDs, Wall Mounted Security Fixture (Jarvis Corp WMFT-350)									$1,530.14
					Quantity		Unit Price		Factor		Total		
				Installation	3.00	x	388.10	x	1.1320	=	1,317.99		
				Demolition	3.00	x	62.47	x	1.1320	=	212.15		
				replace 3 existing exterior lights per clients request									

Subtotal for Section - 26 **$57,035.70**

Section - 31

195	31 05 16 00 0002		CY	#2 Stone Aggregate Fill (1-1/2" To 2-1/2" Clean)									$1,295.01
					Quantity		Unit Price		Factor		Total		
				Installation	25.00	x	45.76	x	1.1320	=	1,295.01		
				4" deep, 200 LF, 2' wide base for backfill for trenching. 20 CY for footings, and slabs									
196	31 05 16 00 0002	0053		For Up To 8, Add									$51.79
					Quantity		Unit Price		Factor		Total		
				Installation	5.00	x	9.15	x	1.1320	=	51.79		
197	31 11 00 00 0008		ACR	Clearing By Machine - Light Brush Without Grub									$174.72
					Quantity		Unit Price		Factor		Total		
				Installation	0.50	x	308.69	x	1.1320	=	174.72		
				clear out weeds in back yard									

Contractor's Price Proposal - Detail Continues..

Work Order Number: 116760.00
Work Order Title: Concord Unit 2956 Conversion

Section - 31

198	31 11 00 00 0017	CY	Hand Loading Of Cleared And Grubbed Material									$849.91
				Quantity		Unit Price		Factor		Total		
			Installation	20.00	x	37.54	x	1.1320	=	849.91		
			clear out weeds in back yard									
199	31 23 16 13 0007	CY	Excavation For Trenching By Hand In SoilIncludes stockpiling excess materials and trimming sides and bottom of trench.									$3,505.24
				Quantity		Unit Price		Factor		Total		
			Installation	25.00	x	123.86	x	1.1320	=	3,505.24		
			20" deep, 200 LF, 2' wide									
200	31 23 16 13 0011	CY	Backfilling or Placing Subbase for Trenches with Imported or Stockpiled Materials by Hand									$973.80
				Quantity		Unit Price		Factor		Total		
			Installation	25.00	x	34.41	x	1.1320	=	973.80		
			20" deep, 200 LF, 2' wide									
201	31 23 16 13 0014	CY	Compaction of Fill or Subbase for Trenches by Hand									$1,098.61
				Quantity		Unit Price		Factor		Total		
			Installation	25.00	x	38.82	x	1.1320	=	1,098.61		
			20" deep, 200 LF, 2' wide									
202	31 23 16 36 0009	CY	Excavation For Building Foundations And Other Structures By Hand in Soil									$6,309.43
				Quantity		Unit Price		Factor		Total		
			Installation	45.00	x	123.86	x	1.1320	=	6,309.43		
			for footings and slab									
203	31 23 16 36 0019	CY	Backfilling Around Building Foundations And Other Structures By Hand									$1,335.53
				Quantity		Unit Price		Factor		Total		
			Installation	20.00	x	58.99	x	1.1320	=	1,335.53		
			for footings and slab									
204	31 23 16 36 0022	CY	Compaction Of Fill Or Subbase For Building Foundations and Other Structures by Hand									$1,976.98
				Quantity		Unit Price		Factor		Total		
			Installation	45.00	x	38.81	x	1.1320	=	1,976.98		
			for footings and slab									

Subtotal for Section - 31 **$17,571.02**

Section - 32

205	32 16 13 13 0016	LF	6" x 12" Cast In Place Concrete Gutter With 6" Curb And Face - Straight									$609.07
				Quantity		Unit Price		Factor		Total		
			Installation	15.00	x	24.92	x	1.1320	=	423.14		
			Demolition	15.00	x	10.95	x	1.1320	=	185.93		
			for parking lot ADA modifications									
206	32 16 23 00 0002	SF	4" Cast In Place Concrete Sidewalk									$586.15
				Quantity		Unit Price		Factor		Total		
			Installation	60.00	x	8.63	x	1.1320	=	586.15		
			for parking lot ADA modifications									
207	32 16 23 00 0002	0094	For Up To 100, Add									$248.59
				Quantity		Unit Price		Factor		Total		
			Installation	60.00	x	3.66	x	1.1320	=	248.59		
208	32 16 23 00 0008	EA	Finish Concrete Handicap Drop Section In SidewalkExcludes patterned (tactile) finish.									$145.65
				Quantity		Unit Price		Factor		Total		
			Installation	1.00	x	128.67	x	1.1320	=	145.65		
			for parking lot ADA modifications									

Contractor's Price Proposal - Detail Continues..

Work Order Number: 116760.00
Work Order Title: Concord Unit 2956 Conversion

Section - 32

209	32 17 23 13 0074	SF	Solid Area, Painted Pavement Marking For Parking AreasUse task for lines >12" wide, stop bars, transverse lines, diagonal lines, crossing lanes, etc.									$281.82
				Quantity		Unit Price		Factor		Total		
			Installation	64.00	x	3.89	x	1.1320	=	281.82		
			for parking lot ADA modifications									
210	32 17 23 13 0088	EA	Handicap Symbol For Van Parking Stalls, Painted Pavement Marking For Parking AreasApproximate overall dimensions: 4-1/3' width x 5' height. White or blue symbol. Excludes striping.									$86.15
				Quantity		Unit Price		Factor		Total		
			Installation	2.00	x	38.05	x	1.1320	=	86.15		
			for parking lot ADA modifications									
211	32 17 26 00 0003	SF	Embedded, VPC Truncated Dome Detectable Warning SurfaceAlso raised strips or directional bars. All colors.									$832.25
				Quantity		Unit Price		Factor		Total		
			Installation	16.00	x	45.95	x	1.1320	=	832.25		
			new truncated domes per A-501									
212	32 31 23 00 0006	LF	6' High Privacy Tongue And Groove Vinyl Fence									$3,593.82
				Quantity		Unit Price		Factor		Total		
			Installation	45.00	x	63.16	x	1.1320	=	3,217.37		
			Demolition	45.00	x	7.39	x	1.1320	=	376.45		
			removal of existing vinyl fence and installation of new due to ADA width requirements . includes a 4' wide ADA gate									
213	32 31 23 00 0051	EA	6' High x 4' Wide Vinyl Gate For Privacy Or Semi-Privacy Fence And Hinge Set									$757.38
				Quantity		Unit Price		Factor		Total		
			Installation	1.00	x	611.32	x	1.1320	=	692.01		
			Demolition	1.00	x	57.74	x	1.1320	=	65.36		
			removal of existing vinyl fence and installation of new due to ADA width requirements . includes a 4' wide ADA gate									
214	32 31 23 00 0078	EA	Stainless Steel Latch Set									$124.46
				Quantity		Unit Price		Factor		Total		
			Installation	1.00	x	109.95	x	1.1320	=	124.46		
			removal of existing vinyl fence and installation of new due to ADA width requirements . includes a 4' wide ADA gate									

Subtotal for Section - 32 **$7,265.34**

Proposal Total **$610,749.96**

This total represents the correct total for the proposal. Any discrepancy between line totals, sub-totals and the proposal total is due to rounding.

The Percentage of NPP on this Proposal: **%**

GORDIAN®

Subcontractor Listing

Date: June 06, 2023

Re:

IQC Master Contract #:	CA-R7-GB06-123021-MDJ
Work Order #:	116760.00
Owner PO #:	
Title:	Concord Unit 2956 Conversion
Contractor:	MDJ Management
Proposal Value:	$610,749.96

Name of Contractor	Duties	Amount	%
Janus Corporation		$100,000.00	16.37
Refined Construction		$450,000.00	73.68

General Conditions for Construction Contracts - Public Housing Programs

U.S. Department of Housing and Urban Development
Office of Public and Indian Housing
OMB Approval No. 2577-0157 (exp. 11/30/2023)

Applicability. This form is applicable to any construction/development contract greater than $250,000.

Public reporting burden for this collection of information is estimated to average 1 hour. This includes the time for collecting, reviewing, and reporting the data. The information requested is required to obtain a benefit. This form includes those clauses required by OMB's common rule on grantee procurement, implemented at HUD in 2 CFR 200, and those requirements set forth in Section 3 of the Housing and Urban Development Act of 1968 and its amendment by the Housing and Community Development Act of 1992, implemented by HUD at 24 CFR Part 75. The form is required for construction contracts awarded by Public Housing Agencies (PHAs). The form is used by Housing Authorities in solicitations to provide necessary contract clauses. If the form were not used, PHAs would be unable to enforce their contracts. There are no assurances of confidentiality. HUD may not conduct or sponsor, and an applicant is not required to respond to a collection of information unless it displays a currently valid OMB control number.

	Clause	Page		Clause	Page
1.	Definitions	2		**Administrative Requirements**	
2.	Contractor's Responsibility for Work	2	25.	Contract Period	9
3.	Architect's Duties, Responsibilities and Authority	2	26.	Order of Precedence	9
4.	Other Contracts	3	27.	Payments	9
	Construction Requirements		28.	Contract Modifications	10
5.	Preconstruction Conference and Notice to Proceed	3	29.	Changes	10
6.	Construction Progress Schedule	3	30.	Suspension of Work	11
7.	Site Investigation and Conditions Affecting the Work	3	31.	Disputes	11
8.	Differing Site Conditions	4	32.	Default	11
9.	Specifications and Drawings for Construction	4	33.	Liquidated	12
10.	As-Built Drawings	5	34.	Termination of Convenience	12
11.	Material and Workmanship	5	35.	Assignment of Contract	12
12.	Permits and Codes	5	36.	Insurance	12
13.	Health, Safety, and Accident Prevention	6	37.	Subcontracts	13
14.	Temporary Buildings and Transportation Materials	6	38.	Subcontracting with Small and Minority Firms, Women's Business Enterprise, and Labor Surplus Area Firms	13
15.	Availability and Use of Utility Services	6	39.	Equal Employment Opportunity	13
16.	Protection of Existing Vegetation, Structures, Equipment, Utilities, and Improvements	6	40.	Employment, Training, and Contracting Opportunities for Low-Income Persons, Section 3 of the Housing and Urban Development Act of 1968	14
17.	Temporary Buildings and Transportation Materials	7	41.	Interest of Members of Congress	15
18.	Clean Air and Water	7	42.	Interest of Members, Officers, or Employees and Former Members, Officers, or Employees	15
19.	Energy Efficiency	7	43.	Limitations on Payments Made to Influence	15
20.	Inspection and Acceptance of Construction	7	44.	Royalties and Patents	15
21.	Use and Possession Prior to	8	45.	Examination and Retention of Contractor's Records	15
22.	Warranty of Title	8	46.	Labor Standards-Davis-Bacon and Related Acts	15
23.	Warranty of	8	47.	Non-Federal Prevailing Wage Rates	19
24.	Prohibition Against Liens	9	48.	Procurement of Recovered Materials	19

1. Definitions

(a) "Architect" means the person or other entity engaged by the PHA to perform architectural, engineering, design, and other services related to the work as provided for in the contract. When a PHA uses an engineer to act in this capacity, the terms "architect" and "engineer" shall be synonymous. The Architect shall serve as a technical representative of the Contracting Officer. The Architect's authority is as set forth elsewhere in this contract.

(b) "Contract" means the contract entered into between the PHA and the Contractor. It includes the forms of Bid, the Bid Bond, the Performance and Payment Bond or Bonds or other assurance of completion, the Certifications, Representations, and Other Statements of Bidders (form HUD-5370), these General Conditions of the Contract for Construction (form HUD-5370), the applicable wage rate determinations from the U.S. Department of Labor, any special conditions included elsewhere in the contract, the specifications, and drawings. It includes all formal changes to any of those documents by addendum, change order, or other modification.

(c) "Contracting Officer" means the person delegated the authority by the PHA to enter into, administer, and/or terminate this contract and designated as such in writing to the Contractor. The term includes any successor Contracting Officer and any duly authorized representative of the Contracting Officer also designated in writing. The Contracting Officer shall be deemed the authorized agent of the PHA in all dealings with the Contractor.

(d) "Contractor" means the person or other entity entering into the contract with the PHA to perform all of the work required under the contract.

(e) "Drawings" means the drawings enumerated in the schedule of drawings contained in the Specifications and as described in the contract clause entitled Specifications and Drawings for Construction herein.

(f) "HUD" means the United States of America acting through the Department of Housing and Urban Development including the Secretary, or any other person designated to act on its behalf. HUD has agreed, subject to the provisions of an Annual Contributions Terms and Conditions (ACC), to provide financial assistance to the PHA, which includes assistance in financing the work to be performed under this contract. As defined elsewhere in these General Conditions or the contract documents, the determination of HUD may be required to authorize changes in the work or for release of funds to the PHA for payment to the Contractor. Notwithstanding HUD's role, nothing in this contract shall be construed to create any contractual relationship between the Contractor and HUD.

(g) "Project" means the entire project, whether construction or rehabilitation, the work for which is provided for in whole or in part under this contract.

(h) "PHA" means the Public Housing Agency organized under applicable state laws which is a party to this contract.

(j) "Specifications" means the written description of the technical requirements for construction and includes the criteria and tests for determining whether the requirements are met.

(l) "Work" means materials, workmanship, and manufacture and fabrication of components.

2. Contractor's Responsibility for Work

(a) The Contractor shall furnish all necessary labor, materials, tools, equipment, and transportation necessary for performance of the work. The Contractor shall also furnish all necessary water, heat, light, and power not made available to the Contractor by the PHA pursuant to the clause entitled Availability and Use of Utility Services herein.

(b) The Contractor shall perform on the site, and with its own organization, work equivalent to at least [ ] (12 percent unless otherwise indicated) of the total amount of work to be performed under the order. This percentage may be reduced by a supplemental agreement to this order if, during performing the work, the Contractor requests a reduction and the Contracting Officer determines that the reduction would be to the advantage of the PHA.

(c) At all times during performance of this contract and until the work is completed and accepted, the Contractor shall directly superintend the work or assign and have on the work site a competent superintendent who is satisfactory to the Contracting Officer and has authority to act for the Contractor.

(d) The Contractor shall be responsible for all damages to persons or property that occur as a result of the Contractor's fault or negligence, and shall take proper safety and health precautions to protect the work, the workers, the public, and the property of others. The Contractor shall hold and save the PHA, its officers and agents, free and harmless from liability of any nature occasioned by the Contractor's performance. The Contractor shall also be responsible for all materials delivered and work performed until completion and acceptance of the entire work, except for any completed unit of work which may have been accepted under the contract.

(e) The Contractor shall lay out the work from base lines and bench marks indicated on the drawings and be responsible for all lines, levels, and measurements of all work executed under the contract. The Contractor shall verify the figures before laying out the work and will be held responsible for any error resulting from its failure to do so.

(f) The Contractor shall confine all operations (including storage of materials) on PHA premises to areas authorized or approved by the Contracting Officer.

(g) The Contractor shall at all times keep the work area, including storage areas, free from accumulations of waste materials. After completing the work and before final inspection, the Contractor shall (1) remove from the premises all scaffolding, equipment, tools, and materials (including rejected materials) that are not the property of the PHA and all rubbish caused by its work; (2) leave the work area in a clean, neat, and orderly condition satisfactory to the Contracting Officer; (3) perform all specified tests; and, (4) deliver the installation in complete and operating condition.

(h) The Contractor's responsibility will terminate when all work has been completed, the final inspection made, and the work accepted by the Contracting Officer. The Contractor will then be released from further obligation except as required by the warranties specified elsewhere in the contract.

3. Architect's Duties, Responsibilities, and Authority

(a) The Architect for this contract, and any successor, shall be designated in writing by the Contracting Officer.

(b) The Architect shall serve as the Contracting Officer's technical representative with respect to architectural, Schedule engineering, and design matters related to the work performed under the contract. The Architect may provide direction on contract performance. Such direction shall be within the scope of the contract and may not be of a nature which: (1) institutes additional work outside the scope of the contract; (2) constitutes a change as defined in the Changes clause herein; (3) causes an increase or decrease in the cost of the contract; (4) alters the Construction Progress Schedule; or (5) changes any of the other express terms or conditions of the contract.

(c) The Architect's duties and responsibilities may include but shall not be limited to:

(1) Making periodic visits to the work site, and on the basis of his/her on-site inspections, issuing written reports to the PHA which shall include all observed deficiencies. The Architect shall file a copy of the report with the Contractor's designated representative at the site;

(2) Making modifications in drawings and technical specifications and assisting the Contracting Officer in the preparation of change orders and other contract modifications for issuance by the Contracting Officer;

(3) Reviewing and making recommendations with respect to - (i) the Contractor's construction progress schedules; (ii) the Contractor's shop and detailed drawings; (iii) the machinery, mechanical and other equipment and materials or other articles proposed for use by the Contractor; and, (iv) the Contractor's price breakdown and progress payment estimates; and,

(4) Assisting in inspections, signing Certificates of Completion, and making recommendations with respect to acceptance of work completed under the contract.

4. Other Contracts

The PHA may undertake or award other contracts for additional work at or near the site of the work under this contract. The Contractor shall fully cooperate with the other contractors and with PHA employees and shall carefully adapt scheduling and performing the work under this contract to accommodate the additional work, heeding any direction that may be provided by the Contracting Officer. The Contractor shall not commit or permit any act that will interfere with the performance of work by any other contractor or by PHA employees

Construction Requirements

5. Pre-construction Conference and Notice to Proceed

(a) Within ten calendar days of contract execution, and prior to the commencement of work, the Contractor shall attend a preconstruction conference with representatives of the PHA, its Architect, and other interested parties convened by the PHA. The conference will serve to acquaint the participants with the general plan of the construction operation and all other requirements of the contract. The PHA will provide the Contractor with the date, time, and place of the conference.

(b) The contractor shall begin work upon receipt of a written Notice to Proceed from the Contracting Officer or designee. The Contractor shall not begin work prior to receiving such notice.

6. Construction Progress

(a) The Contractor shall, within five days after the work commences on the contract or another period of time determined by the Contracting Officer, prepare and submit to the Contracting Officer for approval three copies of a practicable schedule showing the order in which the Contractor proposes to perform the work, and the dates on which the Contractor contemplates starting and completing the several salient features of the work (including acquiring labor, materials, and equipment). The schedule shall be in the form of a progress chart of suitable scale to indicate appropriately the percentage of work scheduled for completion by any given date during the period. If the Contractor fails to submit a schedule within the time prescribed, the Contracting Officer may withhold approval of progress payments or take other remedies under the contract until the Contractor submits the required schedule.

(b) The Contractor shall enter the actual progress on the chart as required by the Contracting Officer, and immediately deliver three copies of the annotated schedule to the Contracting Officer. If the Contracting Officer determines, upon the basis of inspection conducted pursuant to the clause entitled Inspection and Acceptance of Construction, herein that the Contractor is not meeting the approved schedule, the Contractor shall take steps necessary to improve its progress, including those that may be required by the Contracting Officer, without additional cost to the PHA. In this circumstance, the Contracting Officer may require the Contractor to increase the number of shifts, overtime operations, days of work, and/or the amount of construction plant, and to submit for approval any supplementary schedule or schedules in chart form as the Contracting Officer deems necessary to demonstrate how the approved rate of progress will be regained.

(c) Failure of the Contractor to comply with the requirements of the Contracting Officer under this clause shall be grounds for a determination by the Contracting Officer that the Contractor is not prosecuting the work with sufficient diligence to ensure completion within the time specified in the Contract. Upon making this determination, the Contracting Officer may terminate the Contractor's right to proceed with the work, or any separable part of it, in accordance with the Default clause of this contract.

7. Site Investigation and Conditions Affecting the Work

(a) The Contractor acknowledges that it has taken steps reasonably necessary to ascertain the nature and location of the work, and that it has investigated and satisfied itself as to the general and local conditions which can affect the work or its cost, including but not limited to, (1) conditions bearing upon transportation, disposal, handling, and storage of materials; (2) the availability of labor, water, electric power, and roads;(3) uncertainties of weather, river stages, tides, or similar physical conditions at the site; (4) the conformation and conditions of the ground; and (5) the character of equipment and facilities needed preliminary to and during work performance. The Contractor also acknowledges that it has satisfied itself as to the character, quality, and quantity of surface and subsurface materials or obstacles to be encountered insofar as this information is

reasonably ascertainable from an inspection of the site, including all exploratory work done by the PHA, as well as from the drawings and specifications made a part of this contract. Any failure of the Contractor to take the actions described and acknowledged in this paragraph will not relieve the Contractor from responsibility for estimating properly the difficulty and cost of successfully performing the work, or for proceeding to successfully perform the work without additional expense to the PHA.

(b) The PHA assumes no responsibility for any conclusions or interpretations made by the Contractor based on the information made available by the PHA. Nor does the PHA assume responsibility for any understanding reached or representation made concerning conditions which can affect the work by any of its officers or agents before the execution of this contract, unless that understanding or representation is expressly stated in this contract.

8. Differing Site Conditions

(a) The Contractor shall promptly, and before the conditions are disturbed, give a written notice to the Contracting Officer of (1) subsurface or latent physical conditions at the site which differ materially from those indicated in this contract, or (2) unknown physical conditions at the site(s), of an unusual nature, which differ materially from those ordinarily encountered and generally recognized as inhering in work of the character provided for in the contract.

(b) The Contracting Officer shall investigate the site conditions promptly after receiving the notice. Work shall not proceed at the affected site, except at the Contractor's risk, until the Contracting Officer has provided written instructions to the Contractor. If the conditions do materially so differ and cause an increase or decrease in the Contractor's cost of, or the time required for, performing any part of the work under this contract, whether or not changed as a result of the conditions, the Contractor shall file a claim in writing to the PHA within ten days after receipt of such instructions and, in any event, before proceeding with the work. An equitable adjustment in the contract price, the delivery schedule, or both shall be made under this clause and the contract modified in writing accordingly.

(c) No request by the Contractor for an equitable adjustment to the contract under this clause shall be allowed, unless the Contractor has given the written notice required; provided, that the time prescribed in (a) above for giving written notice may be extended by the Contracting Officer.

(d) No request by the Contractor for an equitable adjustment to the contract for differing site conditions shall be allowed if made after final payment under this contract.

9. Specifications and Drawings for Construction

(a) The Contractor shall keep on the work site a copy of the drawings and specifications and shall at all times give the Contracting Officer access thereto. Anything mentioned in the specifications and not shown on the drawings, or shown on the drawings and not mentioned in the specifications, shall be of like effect as if shown or mentioned in both. In case of difference between drawings and specifications, the specifications shall govern. In case of discrepancy in the figures, in the drawings, or in the specifications, the matter shall be promptly submitted to the Contracting Officer, who shall promptly make a determination in writing. Any adjustment by the Contractor without such a determination shall be at its own risk and expense. The Contracting Officer shall furnish from time to time such detailed drawings and other information as considered necessary, unless otherwise provided.

(b) Wherever in the specifications or upon the drawings the words "directed", "required", "ordered", "designated", "prescribed", or words of like import are used, it shall be understood that the "direction", "requirement", "order", "designation", or "prescription", of the Contracting Officer is intended and similarly the words "approved", "acceptable", "satisfactory", or words of like import shall mean "approved by", or "acceptable to", or "satisfactory to" the Contracting Officer, unless otherwise expressly stated.

(c) Where "as shown" "as indicated", "as detailed", or words of similar import are used, it shall be understood that the reference is made to the drawings accompanying this contract unless stated otherwise. The word "provided" as used herein shall be understood to mean "provide complete in place" that is "furnished and installed".

(d) "Shop drawings" means drawings, submitted to the PHA by the Contractor, subcontractor, or any lower tier subcontractor, showing in detail (1) the proposed fabrication and assembly of structural elements and (2) the installation (i.e., form, fit, and attachment details) of materials of equipment. It includes drawings, diagrams, layouts, schematics, descriptive literature, illustrations, schedules, performance and test data, and similar materials furnished by the Contractor to explain in detail specific portions of the work required by the contract. The PHA may duplicate, use, and disclose in any manner and for any purpose shop drawings delivered under this contract.

(e) If this contract requires shop drawings, the Contractor shall coordinate all such drawings, and review them for accuracy, completeness, and compliance with other contract requirements and shall indicate its approval thereon as evidence of such coordination and review. Shop drawings submitted to the Contracting Officer without evidence of the Contractor's approval may be returned for resubmission. The Contracting Officer will indicate an approval or disapproval of the shop drawings and if not approved as submitted shall indicate the PHA's reasons therefore. Any work done before such approval shall be at the Contractor's risk. Approval by the Contracting Officer shall not relieve the Contractor from responsibility for any errors or omissions in such drawings, nor from responsibility for complying with the requirements of this contract, except with respect to variations described and approved in accordance with (f) below.

(f) If shop drawings show variations from the contract requirements, the Contractor shall describe such variations in writing, separate from the drawings, at the time of submission. If the Architect approves any such variation and the Contracting Officer concurs, the Contracting Officer shall issue an appropriate modification to the contract, except that, if the variation is minor or does not involve a change in price or in time of performance, a modification need not be issued.

(g) It shall be the responsibility of the Contractor to make timely requests of the PHA for such large scale and full size drawings, color schemes, and other additional information, not already in his possession, which shall be

required in the planning and production of the work. Such requests may be submitted as the need arises, but each such request shall be filed in ample time to permit appropriate action to be taken by all parties involved so as to avoid delay.

(h) The Contractor shall submit to the Contracting Officer for approval four copies (unless otherwise indicated) of all shop drawings as called for under the various headings of these specifications. Three sets (unless otherwise indicated) of all shop drawings, will be retained by the PHA and one set will be returned to the Contractor. As required by the Contracting Officer, the Contractor, upon completing the work under this contract, shall furnish a complete set of all shop drawings as finally approved. These drawings shall show all changes and revisions made up to the time the work is completed and accepted.

(i) This clause shall be included in all subcontracts at any tier. It shall be the responsibility of the Contractor to ensure that all shop drawings prepared by subcontractors are submitted to the Contracting Officer.

10. As-Built Drawings

(a) "As-built drawings," as used in this clause, means drawings submitted by the Contractor or subcontractor at any tier to show the construction of a particular structure or work as actually completed under the contract. "As-built drawings" shall be synonymous with "Record drawings."

(b) As required by the Contracting Officer, the Contractor shall provide the Contracting Officer accurate information to be used in the preparation of permanent as-built drawings. For this purpose, the Contractor shall record on one set of contract drawings all changes from the installations originally indicated, and record final locations of underground lines by depth from finish grade and by accurate horizontal offset distances to permanent surface improvements such as buildings, curbs, or edges of walks.

(c) This clause shall be included in all subcontracts at any tier. It shall be the responsibility of the Contractor to ensure that all as-built drawings prepared by subcontractors are submitted to the Contracting Officer.

11. Material and Workmanship

(a) All equipment, material, and articles furnished under this contract shall be new and of the most suitable grade for the purpose intended, unless otherwise specifically provided in this contract. References in the contract to equipment, material, articles, or patented processes by trade name, make, or catalog number, shall be regarded as establishing a standard of quality and shall not be construed as limiting competition. The Contractor may, at its option, use any equipment, material, article, or process that, in the judgment of, and as approved by the Contracting Officer, is equal to that named in the specifications, unless otherwise specifically provided in this contract.

(b) Approval of equipment and materials.

(1) The Contractor shall obtain the Contracting Officer's approval of the machinery and mechanical and other equipment to be incorporated into the work. When requesting approval, the Contractor shall furnish to the Contracting Officer the name of the manufacturer, the model number, and other information concerning the performance, capacity, nature, and rating of the machinery and mechanical and other equipment. When required by this contract or by the Contracting Officer, the Contractor shall also obtain the Contracting Officer's approval of the material or articles which the Contractor contemplates incorporating into the work. When requesting approval, the Contractor shall provide full information concerning the material or articles. Machinery, equipment, material, and articles that do not have the required approval shall be installed or used at the risk of subsequent rejection.

(2) When required by the specifications or the Contracting Officer, the Contractor shall submit appropriately marked samples (and certificates related to them) for approval at the Contractor's expense, with all shipping charges prepaid. The Contractor shall label, or otherwise properly mark on the container, the material or product represented, its place of origin, the name of the producer, the Contractor's name, and the identification of the construction project for which the material or product is intended to be used.

(3) Certificates shall be submitted in triplicate, describing each sample submitted for approval and certifying that the material, equipment or accessory complies with contract requirements. The certificates shall include the name and brand of the product, name of manufacturer, and the location where produced.

(4) Approval of a sample shall not constitute a waiver of the PHA right to demand full compliance with contract requirements. Materials, equipment and accessories may be rejected for cause even though samples have been approved.

(5) Wherever materials are required to comply with recognized standards or specifications, such specifications shall be accepted as establishing the technical qualities and testing methods, but shall not govern the number of tests required to be made nor modify other contract requirements. The Contracting Officer may require laboratory test reports on items submitted for approval or may approve materials on the basis of data submitted in certificates with samples. Check tests will be made on materials delivered for use only as frequently as the Contracting Officer determines necessary to insure compliance of materials with the specifications. The Contractor will assume all costs of retesting materials which fail to meet contract requirements and/or testing materials offered in substitution for those found deficient.

(6) After approval, samples will be kept in the Project office until completion of work. They may be built into the work after a substantial quantity of the materials they represent has been built in and accepted.

(c) Requirements concerning lead-based paint. The Contractor shall comply with the requirements concerning lead-based paint contained in the Lead-Based Paint Poisoning Prevention Act (42 U.S.C. 4821-4846) as implemented by 24 CFR Part 35.

12. Permits and Codes

(a) The Contractor shall give all notices and comply with all applicable laws, ordinances, codes, rules and regulations. Notwithstanding the requirement of the Contractor to comply with the drawings and specifications in the contract, all work installed shall comply with all applicable codes and regulations as amended by any

waivers. Before installing the work, the Contractor shall examine the drawings and the specifications for compliance with applicable codes and regulations bearing on the work and shall immediately report any discrepancy it may discover to the Contracting Officer. Where the requirements of the drawings and specifications fail to comply with the applicable code or regulation, the Contracting Officer shall modify the contract by change order pursuant to the clause entitled Changes herein to conform to the code or regulation.

(b) The Contractor shall secure and pay for all permits, fees, and licenses necessary for the proper execution and completion of the work. Where the PHA can arrange for the issuance of all or part of these permits, fees and licenses, without cost to the Contractor, the contract amount shall be reduced accordingly.

13. Health, Safety, and Accident Prevention

(a) In performing this contract, the Contractor shall:

(1) Ensure that no laborer or mechanic shall be required to work in surroundings or under working conditions which are unsanitary, hazardous, or dangerous to his/her health and/or safety as determined under construction safety and health standards promulgated by the Secretary of Labor by regulation;

(2) Protect the lives, health, and safety of other persons;

(3) Prevent damage to property, materials, supplies, and equipment; and,

(4) Avoid work interruptions.

(b) For these purposes, the Contractor shall:

(1) Comply with regulations and standards issued by the Secretary of Labor at 29 CFR Part 1926. Failure to comply may result in imposition of sanctions pursuant to the Contract Work Hours and Safety Standards Act (Public Law 91-54, 83 Stat. 96), 40 U.S.C. 3701 et seq.; and

(2) Include the terms of this clause in every subcontract so that such terms will be binding on each subcontractor.

(c) The Contractor shall maintain an accurate record of exposure data on all accidents incident to work performed under this contract resulting in death, traumatic injury, occupational disease, or damage to property, materials, supplies, or equipment, and shall report this data in the manner prescribed by 29 CFR Part 1904.

(d) The Contracting Officer shall notify the Contractor of any noncompliance with these requirements and of the corrective action required. This notice, when delivered to the Contractor or the Contractor's representative at the site of the work, shall be deemed sufficient notice of the noncompliance and corrective action required. After receiving the notice, the Contractor shall immediately take corrective action. If the Contractor fails or refuses to take corrective action promptly, the Contracting Officer may issue an order stopping all or part of the work until satisfactory corrective action has been taken. The Contractor shall not base any claim or request for equitable adjustment for additional time or money on any stop order issued under these circumstances.

(e) The Contractor shall be responsible for its subcontractors' compliance with the provisions of this clause. The Contractor shall take such action with respect to any subcontract as the PHA, the Secretary of Housing and Urban Development, or the Secretary of Labor shall direct as a means of enforcing such provisions.

14. Temporary Heating

The Contractor shall provide and pay for temporary heating, covering, and enclosures necessary to properly protect all work and materials against damage by dampness and cold, to dry out the work, and to facilitate the completion of the work. Any permanent heating equipment used shall be turned over to the PHA in the condition and at the time required by the specifications.

15. Availability and Use of Utility Services

(a) The PHA shall make all reasonably required amounts of utilities available to the Contractor from existing outlets and supplies, as specified in the contract. Unless otherwise provided in the contract, the amount of each utility service consumed shall be charged to or paid for by the Contractor at prevailing rates charged to the PHA or, where the utility is produced by the PHA, at reasonable rates determined by the Contracting Officer. The Contractor shall carefully conserve any utilities furnished without charge.

(b) The Contractor, at its expense and in a manner satisfactory to the Contracting Officer, shall install and maintain all necessary temporary connections and distribution lines, and all meters required to measure the amount of each utility used for the purpose of determining charges. Before final acceptance of the work by the PHA, the Contractor shall remove all the temporary connections, distribution lines, meters, and associated paraphernalia.

16. Protection of Existing Vegetation, Structures, Equipment, Utilities, and Improvements

(a) The Contractor shall preserve and protect all structures, equipment, and vegetation (such as trees, shrubs, and grass) on or adjacent to the work site, which are not to be removed under this contract, and which do not unreasonably interfere with the work required under this contract.

(b) The Contractor shall only remove trees when specifically authorized to do so, and shall avoid damaging vegetation that will remain in place. If any limbs or branches of trees are broken during performance of this contract, or by the careless operation of equipment, or by workmen, the Contractor shall trim those limbs or branches with a clean cut and paint the cut with a tree-pruning compound as directed by the Contracting Officer.

(c) The Contractor shall protect from damage all existing improvements and utilities (1) at or near the work site and (2) on adjacent property of a third party, the locations of which are made known to or should be known by the Contractor. Prior to disturbing the ground at the construction site, the Contractor shall ensure that all underground utility lines are clearly marked.

(d) The Contractor shall shore up, brace, underpin, secure, and protect as necessary all foundations and other parts of existing structures adjacent to, adjoining, and in the vicinity of the site, which may be affected by the excavations or other operations connected with the construction of the project.

(e) Any equipment temporarily removed as a result of work under this contract shall be protected, cleaned, and replaced in the same condition as at the time of award of this contract.

(f) New work which connects to existing work shall correspond in all respects with that to which it connects and/or be similar to existing work unless otherwise required by the specifications.

(g) No structural members shall be altered or in any way weakened without the written authorization of the Contracting Officer, unless such work is clearly specified in the plans or specifications.

(h) If the removal of the existing work exposes discolored or unfinished surfaces, or work out of alignment, such surfaces shall be refinished, or the material replaced as necessary to make the continuous work uniform and harmonious. This, however, shall not be construed to require the refinishing or reconstruction of dissimilar finishes previously exposed, or finished surfaces in good condition, but in different planes or on different levels **Construction** when brought together by the removal of intervening work, unless such refinishing or reconstruction is specified in the plans or specifications.

(i) The Contractor shall give all required notices to any adjoining or adjacent property owner or other party before the commencement of any work.

(j) The Contractor shall indemnify and save harmless the PHA from any damages on account of settlement or the loss of lateral support of adjoining property, any damages from changes in topography affecting drainage, and from all loss or expense and all damages for which the PHA may become liable in consequence of such injury or damage to adjoining and adjacent structures and their premises.

(k) The Contractor shall repair any damage to vegetation, structures, equipment, utilities, or improvements, including those that are the property of a third party, resulting from failure to comply with the requirements of this contract or failure to exercise reasonable care in performing the work. If the Contractor fails or refuses to repair the damage promptly, the Contracting Officer may have the necessary work performed and charge the cost to the Contractor.

17. Temporary Buildings and Transportation of Materials

(a) Temporary buildings (e.g., storage sheds, shops, offices, sanitary facilities) and utilities may be erected by the Contractor only with the approval of the Contracting Officer and shall be built with labor and materials furnished by the Contractor without expense to the PHA. The temporary buildings and utilities shall remain the property of the Contractor and shall be removed by the Contractor at its expense upon completion of the work. With the written consent of the Contracting Officer, the buildings and utilities may be abandoned and need not be removed.

(b) The Contractor shall, as directed by the Contracting Officer, use only established roadways, or use temporary roadways constructed by the Contractor when and as authorized by the Contracting Officer. When materials are transported in prosecuting the work, vehicles shall not be loaded beyond the loading capacity recommended by the manufacturer of the vehicle or prescribed by any federal, state, or local law or regulation. When it is necessary to cross curbs or sidewalks, the Contractor shall protect them from damage. The Contractor shall repair or pay for the repair of any damaged curbs, sidewalks, or roads.

18. Clean Air and Water

The contactor shall comply with the Clean Air Act, as amended, 42 USC 7401 et seq., the Federal Water Pollution Control Water Act, as amended, 33 U.S.C. 1251 et seq., and standards issued pursuant thereto in the facilities in which this contract is to be performed.

19. Energy Efficiency

The Contractor shall comply with mandatory standards and policies relating to energy efficiency which are contained in the energy conservation plan issued in compliance with the Energy Policy and Conservation Act (Pub.L. 94-163) for the State in which the work under the contract is performed.

20. Inspection and Acceptance of

(a) Definitions. As used in this clause -

(1) “Acceptance” means the act of an authorized representative of the PHA by which the PHA approves and assumes ownership of the work performed under this contract. Acceptance may be partial or complete.

(2) “Inspection” means examining and testing the work performed under the contract (including, when appropriate, raw materials, equipment, components, and intermediate assemblies) to determine whether it conforms to contract requirements.

(3) “Testing” means that element of inspection that determines the properties or elements, including functional operation of materials, equipment, or their components, by the application of established scientific principles and procedures.

(b) The Contractor shall maintain an adequate inspection system and perform such inspections as will ensure that the work performed under the contract conforms to contract requirements. All work is subject to PHA inspection and test at all places and at all reasonable times before acceptance to ensure strict compliance with the terms of the contract.

(c) PHA inspections and tests are for the sole benefit of the PHA and do not: (1) relieve the Contractor of responsibility for providing adequate quality control measures; (2) relieve the Contractor of responsibility for loss or damage of the material before acceptance; (3) constitute or imply acceptance; or, (4) affect the continuing rights of the PHA after acceptance of the completed work under paragraph (j) below.

(d) The presence or absence of the PHA inspector does not relieve the Contractor from any contract requirement, nor is the inspector authorized to change any term or condition of the specifications without the Contracting Officer’s written authorization. All instructions and approvals with respect to the work shall be given to the Contractor by the Contracting Officer.

(e) The Contractor shall promptly furnish, without additional charge, all facilities, labor, and material reasonably needed for performing such safe and convenient inspections and tests as may be required by the Contracting Officer. The PHA may charge to the Contractor any additional cost of inspection or test when work is not ready at the time specified by the Contractor for inspection or test, or when prior rejection makes reinspection or retest necessary. The PHA shall perform all inspections and tests in a manner that will not unnecessarily delay the work. Special, full size, and performance tests shall be performed as described in the contract.

(f) The PHA may conduct routine inspections of the construction site on a daily basis.

(g) The Contractor shall, without charge, replace or correct work found by the PHA not to conform to contract requirements, unless the PHA decides that it is in its interest to accept the work with an appropriate adjustment in contract price. The Contractor shall promptly segregate and remove rejected material from the premises.

(h) If the Contractor does not promptly replace or correct rejected work, the PHA may (1) by contract or otherwise, replace or correct the work and charge the cost to the Contractor, or (2) terminate for default the Contractor's right to proceed.

(i) If any work requiring inspection is covered up without approval of the PHA, it must, if requested by the Contracting Officer, be uncovered at the expense of the Contractor. If at any time before final acceptance of the entire work, the **Construction** PHA considers it necessary or advisable, to examine work already completed by removing or tearing it out, the Contractor, shall on request, promptly furnish all necessary facilities, labor, and material. If such work is found to be defective or nonconforming in any material respect due to the fault of the Contractor or its subcontractors, the Contractor shall defray all the expenses of the examination and of satisfactory reconstruction. If, however, such work is found to meet the requirements of the contract, the Contracting Officer shall make an equitable adjustment to cover the cost of the examination and reconstruction, including, if completion of the work was thereby delayed, an extension of time.

(j) The Contractor shall notify the Contracting Officer, in writing, as to the date when in its opinion all or a designated portion of the work will be substantially completed and ready for inspection. If the Architect determines that the state of preparedness is as represented, the PHA will promptly arrange for the inspection. Unless otherwise specified in the contract, the PHA shall accept, as soon as practicable after completion and inspection, all work required by the contract or that portion of the work the Contracting Officer determines and designates can be accepted separately. Acceptance shall be final and conclusive except for latent defects, fraud, gross mistakes amounting to fraud, or the PHA's right under any warranty or guarantee.

21. Use and Possession Prior to Completion

(a) The PHA shall have the right to take possession of or use any completed or partially completed part of the work. Before taking possession of or using any work, the Contracting Officer shall furnish the Contractor a list of items of work remaining to be performed or corrected on those portions of the work that the PHA intends to take possession of or use. However, failure of the Contracting Officer to list any item of work shall not relieve the Contractor of responsibility for complying with the terms of the contract. The PHA's possession or use shall not be deemed an acceptance of any work under the contract.

(b) While the PHA has such possession or use, the Contractor shall be relieved of the responsibility for (1) the loss of or damage to the work resulting from the PHA's possession or use, notwithstanding the terms of the clause entitled Permits and Codes herein; (2) all maintenance costs on the areas occupied; and, (3) furnishing heat, light, power, and water used in the areas occupied without proper remuneration therefore. If prior possession or use by the PHA delays the progress of the work or causes additional expense to the Contractor, an equitable adjustment shall be made in the contract price or the time of completion, and the contract shall be modified in writing accordingly.

22. Warranty of Title

The Contractor warrants good title to all materials, supplies, and equipment incorporated in the work and agrees to deliver the premises together with all improvements thereon free from any claims, liens or charges, and agrees further that neither it nor any other person, firm or corporation shall have any right to a lien upon the premises or anything appurtenant thereto.

23. Warranty of

(a) In addition to any other warranties in this contract, the Contractor warrants, except as provided in paragraph (j) of this clause, that work performed under this contract conforms to the contract requirements and is free of any defect in equipment, material, or workmanship performed by the Contractor or any subcontractor or supplier at any tier. This warranty shall continue for a period of _____ (one year unless otherwise indicated) from the date of final acceptance of the work. If the PHA takes possession of any part of the work before final acceptance, this warranty shall continue for a period of (one year unless otherwise indicated) from the date that the PHA takes possession.

(b) The Contractor shall remedy, at the Contractor's expense, any failure to conform, or any defect. In addition, the Contractor shall remedy, at the Contractor's expense, any damage to PHA-owned or controlled real or personal property when the damage is the result of—

(1) The Contractor's failure to conform to contract requirements; or

(2) Any defects of equipment, material, workmanship or design furnished by the Contractor.

(c) The Contractor shall restore any work damaged in fulfilling the terms and conditions of this clause. The Contractor's warranty with respect to work repaired or replaced will run for (one year unless otherwise indicated) from the date of repair or replacement.

(d) The Contracting Officer shall notify the Contractor, in writing, within a reasonable time after the discovery of any failure, defect or damage.

(e) If the Contractor fails to remedy any failure, defect, or damage within a reasonable time after receipt of notice, the PHA shall have the right to replace, repair or otherwise remedy the failure, defect, or damage at the Contractor's expense.

(f) With respect to all warranties, express or implied, from subcontractors, manufacturers, or suppliers for work performed and materials furnished under this contract, the Contractor shall:

(1) Obtain all warranties that would be given in normal commercial practice;

(2) Require all warranties to be executed in writing, for the benefit of the PHA; and,

(3) Enforce all warranties for the benefit of the PHA.

(g) In the event the Contractor's warranty under paragraph (a) of this clause has expired, the PHA may bring suit at its own expense to enforce a subcontractor's, manufacturer's or supplier's warranty.

(h) Unless a defect is caused by the negligence of the Contractor or subcontractor or supplier at any tier, the Contractor shall not be liable for the repair of any defect of material or design furnished by the PHA nor for the repair of any damage that results from any defect in PHA furnished material or design.

(i) Notwithstanding any provisions herein to the contrary, the establishment of the time periods in paragraphs (a) and (c) above relate only to the specific obligation of the Contractor to correct the work, and have no relationship to the time within which its obligation to comply with the contract may be sought to be enforced, nor to the time within which proceedings may be commenced to establish the Contractor's liability with respect to its obligation other than specifically to correct the work.

(j) This warranty shall not limit the PHA's rights under the Inspection and Acceptance of Construction clause of this contract with respect to latent defects, gross mistakes or fraud.

24. Prohibition Against Liens

The Contractor is prohibited from placing a lien on the PHA's property. This prohibition shall apply to all subcontractors at any tier and all materials suppliers.

Administrative Requirements

25. Contract Period

this contract within calendar days of the effective date of the contract, or within the time schedule established in the notice to proceed issued by the Contracting Officer.

26. Order of Provisions

accordance with the terms and conditions of the

In the event of a conflict between these General Conditions and the Specifications, the General Conditions shall prevail. In the event of a conflict between the contract and any applicable state or local law or regulation, the state or local law or regulation shall prevail; provided that such state or local law or regulation does not conflict with, or is less restrictive than applicable federal law, regulation, or Executive Order. In the event of such a conflict, applicable federal law, regulation, and Executive Order shall prevail.

27. Payments

retain ten (10) percent of the amount of progress

(a) The PHA shall pay the Contractor the price as provided in this contract.

(b) The PHA shall make progress payments approximately every 30 days as the work proceeds, on estimates of work accomplished which meets the standards of quality established under the contract, as approved by the Contracting Officer. The PHA may, subject to written determination and approval of the Contracting Officer, make more frequent payments to contractors which are qualified small businesses.

(c) Before the first progress payment under this contract, the Contractor shall furnish, in such detail as requested by the Contracting Officer, a breakdown of the total contract price showing the amount included therein for each principal category of the work, which shall substantiate the payment amount requested in order to provide a basis for determining progress payments. The breakdown shall be approved by the Contracting Officer and must be acceptable to HUD. If the contract covers more than one project, the Contractor shall furnish a separate breakdown for each. The values and quantities employed in making up this breakdown are for determining the amount of progress payments and shall not be construed as a basis for additions to or deductions from the contract price. The Contractor shall prorate its overhead and profit over the construction period of the contract.

(d) The Contractor shall submit, on forms provided by the PHA, periodic estimates showing the value of the work performed during each period based upon the approved

submitted not later than _____ days in advance of the date set for payment and are subject to correction and revision as required. The estimates must be approved by the Contracting Officer with the concurrence of the Architect prior to payment. If the contract covers more than one project, the Contractor shall furnish a separate progress payment estimate for each.

(e) Along with each request for progress payments and the required estimates, the Contractor shall furnish the following certification, or payment shall not be made: I hereby certify, to the best of my knowledge and belief, that:

(1) The amounts requested are only for performance in accordance with the specifications, terms, and conditions of the contract;

(2) Payments to subcontractors and suppliers have been made from previous payments received under the contract, and timely payments will be made from the proceeds of the payment covered by this certification, in accordance with subcontract agreements; and,

(3) This request for progress payments does not include any amounts which the prime contractor intends to withhold or retain from a subcontractor or supplier in

subcontract.

Name:

Title:

Date:

(f) Except as otherwise provided in State law, the PHA shall

payments until completion and acceptance of all work under the contract; except, that if upon completion of 50 percent of the work, the Contracting Officer, after consulting with the Architect, determines that the Contractor's performance and progress are satisfactory, the PHA may make the remaining payments in full for the work subsequently completed. If the Contracting Officer subsequently determines that the Contractor's performance and progress are unsatisfactory, the PHA shall reinstate the ten (10) percent (or other percentage as provided in State law) retainage until such time as the Contracting Officer determines that performance and progress are satisfactory.

(g) The Contracting Officer may authorize material delivered on the site and preparatory work done to be taken into consideration when computing progress payments.

Material delivered to the Contractor at locations other than the site may also be taken into consideration if the Contractor furnishes satisfactory evidence that (1) it has acquired title to such material; (2) the material is properly stored in a bonded warehouse, storage yard, or similar suitable place as may be approved by the Contracting Officer; (3) the material is insured to cover its full value; and (4) the material will be used to perform this contract. Before any progress payment which includes delivered material is made, the Contractor shall furnish such documentation as the Contracting Officer may require to assure the protection of the PHA's interest in such materials. The Contractor shall remain responsible for such stored material notwithstanding the transfer of title to the PHA.

(h) All material and work covered by progress payments made shall, at the time of payment become the sole property of the PHA, but this shall not be construed as (1) relieving the Contractor from the sole responsibility for all material and work upon which payments have been made or the restoration of any damaged work; or, (2) waiving the right of the PHA to require the fulfillment of all of the terms of the contract. In the event the work of the Contractor has been damaged by other contractors or persons other than employees of the PHA in the course of their employment, the Contractor shall restore such damaged work without cost to the PHA and to seek redress for its damage only from those who directly caused it.

(i) The PHA shall make the final payment due the Contractor under this contract after (1) completion and final acceptance of all work; and (2) presentation of release of all claims against the PHA arising by virtue of this contract, other than claims, in stated amounts, that the Contractor has specifically excepted from the operation of the release. Each such exception shall embrace no more than one claim, the basis and scope of which shall be clearly defined. The amounts for such excepted claims shall not be included in the request for final payment. A release may also be required of the assignee if the Contractor's claim to amounts payable under this contract has been assigned.

(j) Prior to making any payment, the Contracting Officer may require the Contractor to furnish receipts or other evidence of payment from all persons performing work and supplying material to the Contractor, if the Contracting Officer determines such evidence is necessary to substantiate claimed costs.

(k) The PHA shall not; (1) determine or adjust any claims for payment or disputes arising there under between the Contractor and its subcontractors or material suppliers; or, (2) withhold any moneys for the protection of the subcontractors or material suppliers. The failure or refusal of the PHA to withhold moneys from the Contractor shall in nowise impair the obligations of any surety or sureties under any bonds furnished under this contract.

28. Contract Modifications

(a) Only the Contracting Officer has authority to modify any term or condition of this contract. Any contract modification shall be authorized in writing.

(b) The Contracting Officer may modify the contract unilaterally (1) pursuant to a specific authorization stated in a contract clause (e.g., Changes); or (2) for administrative matters which do not change the rights or responsibilities of the parties (e.g., change in the PHA address). All other contract modifications shall be in the form of supplemental agreements signed by the Contractor and the Contracting Officer.

(c) When a proposed modification requires the approval of HUD prior to its issuance (e.g., a change order that exceeds the PHA's approved threshold), such modification shall not be effective until the required approval is received by the PHA.

29. Changes

(a) The Contracting Officer may, at any time, without notice to the sureties, by written order designated or indicated to be a change order, make changes in the work within the general scope of the contract including changes:
(1) In the specifications (including drawings and designs);
(2) In the method or manner of performance of the work;
(3) PHA-furnished facilities, equipment, materials, services, or site; or,
(4) Directing the acceleration in the performance of the work.

(b) Any other written order or oral order (which, as used in this paragraph (b), includes direction, instruction, interpretation, or determination) from the Contracting Officer that causes a change shall be treated as a change order under this clause; provided, that the Contractor gives the Contracting Officer written notice stating (1) the date, circumstances and source of the order and (2) that the Contractor regards the order as a change order.

(c) Except as provided in this clause, no order, statement or conduct of the Contracting Officer shall be treated as a change under this clause or entitle the Contractor to an equitable adjustment.

(d) If any change under this clause causes an increase or decrease in the Contractor's cost of, or the time required for the performance of any part of the work under this contract, whether or not changed by any such order, the Contracting Officer shall make an equitable adjustment and modify the contract in writing. However, except for a adjustment based on defective specifications, no proposal for any change under paragraph (b) above shall be allowed for any costs incurred more than 20 days (5 days for oral orders) before the Contractor gives written notice as required. In the case of defective specifications for which the PHA is responsible, the equitable adjustment shall include any increased cost reasonably incurred by the Contractor in attempting to comply with the defective specifications.

(e) The Contractor must assert its right to an adjustment under this clause within 30 days after (1) receipt of a written change order under paragraph (a) of this clause, or (2) the furnishing of a written notice under paragraph (b) of this clause, by submitting a written statement describing the general nature and the amount of the proposal. If the facts justify it, the Contracting Officer may extend the period for submission. The proposal may be included in the notice required under paragraph (b) above. No proposal by the Contractor for an equitable adjustment shall be allowed if asserted after final payment under this contract.

(f) The Contractor's written proposal for equitable adjustment shall be submitted in the form of a lump sum proposal supported with an itemized breakdown of all increases and decreases in the contract in at least the following details:

(1) Direct Costs. Materials (list individual items, the quantity and unit cost of each, and the aggregate cost); Transportation and delivery costs associated with materials; Labor breakdowns by hours or unit costs (identified with specific work to be performed); Construction equipment exclusively necessary for the change; Costs of preparation and/ or revision to shop drawings resulting from the change; Worker's Compensation and Public Liability Insurance; Employment taxes under FICA and FUTA; and, Bond Costs when size of change warrants revision.

(2) Indirect Costs. Indirect costs may include overhead, general and administrative expenses, and fringe benefits not normally treated as direct costs.

(3) Profit. The amount of profit shall be negotiated and may vary according to the nature, extent, and complexity of the work required by the change. The allowability of the direct and indirect costs shall be determined in accordance with the Contract Cost Principles and Procedures for Commercial Firms in Part 31 of the Federal Acquisition Regulation (48 CFR 1-31), as implemented by HUD Handbook 2210.18, in effect on the date of this contract. The Contractor shall not be allowed a profit on the profit received by any subcontractor. Equitable adjustments for deleted work shall include a credit for profit and may include a credit for indirect costs. On proposals covering both increases and decreases in the amount of the contract, the application of indirect costs and profit shall be on the net-change in direct costs for the Contractor or subcontractor performing the work.

(g) The Contractor shall include in the proposal its request for time extension (if any), and shall include sufficient information and dates to demonstrate whether and to what extent the change will delay the completion of the contract in its entirety.

(h) The Contracting Officer shall act on proposals within 30 days after their receipt, or notify the Contractor of the date when such action will be taken.

(i) Failure to reach an agreement on any proposal shall be a dispute under the clause entitled Disputes herein. Nothing in this clause, however, shall excuse the Contractor from proceeding with the contract as changed.

(j) Except in an emergency endangering life or property, no change shall be made by the Contractor without a prior order from the Contracting Officer.

30. Suspension of Work

(a) The Contracting Officer may order the Contractor in writing to suspend, delay, or interrupt all or any part of the work of this contract for the period of time that the Contracting Officer determines appropriate for the convenience of the PHA.

(b) If the performance of all or any part of the work is, for an unreasonable period of time, suspended, delayed, or interrupted (1) by an act of the Contracting Officer in the administration of this contract, or (2) by the Contracting Officer's failure to act within the time specified (or within a reasonable time if not specified) in this contract an adjustment shall be made for any increase in the cost of performance of the contract (excluding profit) necessarily caused by such unreasonable suspension, delay, or interruption and the contract modified in writing accordingly. However, no adjustment shall be made under this clause for any suspension, delay, or interruption to the extent that performance would have been so suspended, delayed, or interrupted by any other cause, including the fault or negligence of the Contractor or for which any equitable adjustment is provided for or excluded under any other provision of this contract.

(c) A claim under this clause shall not be allowed (1) for any costs incurred more than 20 days before the Contractor shall have notified the Contracting Officer in writing of the act or failure to act involved (but this requirement shall not apply as to a claim resulting from a suspension order); and, (2) unless the claim, in an amount stated, is asserted in writing as soon as practicable after the termination of the suspension, delay, or interruption, but not later than the date of final payment under the contract.

31. Disputes

(a) "Claim," as used in this clause, means a written demand or written assertion by one of the contracting parties seeking, as a matter of right, the payment of money in a sum certain, the adjustment or interpretation of contract terms, or other relief arising under or relating to the contract. A claim arising under the contract, unlike a claim relating to the contract, is a claim that can be resolved under a contract clause that provides for the relief sought by the claimant. A voucher, invoice, or other routine request for payment that is not in dispute when submitted is not a claim. The submission may be converted to a claim by complying with the requirements of this clause, if it is disputed either as to liability or amount or is not acted upon in a reasonable time.

(b) Except for disputes arising under the clauses entitled Labor Standards - Davis Bacon and Related Acts, herein, all disputes arising under or relating to this contract, including any claims for damages for the alleged breach thereof which are not disposed of by agreement, shall be resolved under this clause.

(c) All claims by the Contractor shall be made in writing and submitted to the Contracting Officer for a written decision. A claim by the PHA against the Contractor shall be subject to a written decision by the Contracting Officer.

(d) The Contracting Officer shall, within 60 (unless otherwise indicated) days after receipt of the request, decide the claim or notify the Contractor of the date by which the decision will be made.

(e) The Contracting Officer's decision shall be final unless the Contractor (1) appeals in writing to a higher level in the PHA in accordance with the PHA's policy and procedures, (2) refers the appeal to an independent mediator or arbitrator, or (3) files suit in a court of competent jurisdiction. Such appeal must be made within (30 unless otherwise indicated) days after receipt of the Contracting Officer's decision.

(f) The Contractor shall proceed diligently with performance of this contract, pending final resolution of any request for relief, claim, appeal, or action arising under or relating to the contract, and comply with any decision of the Contracting Officer.

32. Default

(a) If the Contractor refuses or fails to prosecute the work, or any separable part thereof, with the diligence that will insure its completion within the time specified in this contract, or any extension thereof, or fails to complete said work within this time, the Contracting Officer may, by written notice to the Contractor, terminate the right to

proceed with the work (or separable part of the work) that has been delayed. In this event, the PHA may take over the work and complete it, by contract or otherwise, and may take possession of and use any materials, equipment, and plant on the work site necessary for completing the work. The Contractor and its sureties shall be liable for any damage to the PHA resulting from the Contractor's refusal or failure to complete the work within the specified time, whether or not the Contractor's right to proceed with the work is terminated. This liability includes any increased costs incurred by the PHA in completing the work.

(b) The Contractor's right to proceed shall not be terminated or the Contractor charged with damages under this clause if—

(1) The delay in completing the work arises from unforeseeable causes beyond the control and without the fault or negligence of the Contractor. Examples of such causes include (i) acts of God, or of the public enemy, (ii) acts of the PHA or other governmental entity in either its sovereign or contractual capacity, (iii) acts of another contractor in the performance of a contract with the PHA, (iv) fires, (v) floods, (vi) epidemics, (vii) quarantine restrictions, (viii) strikes, (ix) freight embargoes, (x) unusually severe weather, or (xi) delays of subcontractors or suppliers at any tier arising from unforeseeable causes beyond the control and without the fault or negligence of both the Contractor and the subcontractors or suppliers; and

(2) The Contractor, within days (10 days unless otherwise indicated) from the beginning of such delay (unless extended by the Contracting Officer) notifies the Contracting Officer in writing of the causes of delay. The Contracting Officer shall ascertain the facts and the extent of the delay. If, in the judgment of the Contracting Officer, the findings of fact warrant such action, time for completing the work shall be extended by written modification to the contract. The findings of the Contracting Officer shall be reduced to a written decision which shall be subject to the provisions of the Disputes clause of this contract.

(c) If, after termination of the Contractor's right to proceed, it is determined that the Contractor was not in default, or that the delay was excusable, the rights and obligations of the parties will be the same as if the termination had been for convenience of the PHA.

33. Liquidated Damages

(a) If the Contractor fails to complete the work within the time specified in the contract, or any extension, as specified in the clause entitled Default of this contract, the Contractor shall pay to the PHA as liquidated damages, the sum of $ _____ Contracting Officer insert amount] for each day of delay. If different completion dates are specified in the contract for separate parts or stages of the work, the amount of liquidated damages shall be assessed on those parts or stages which are delayed. To the extent that the Contractor's delay or nonperformance is excused under another clause in this contract, liquidated damages shall not be due the PHA. The Contractor remains liable for damages caused other than by delay.

(b) If the PHA terminates the Contractor's right to proceed, the resulting damage will consist of liquidated damages until such reasonable time as may be required for final completion of the work together with any increased costs occasioned the PHA in completing the work.

(c) If the PHA does not terminate the Contractor's right to proceed, the resulting damage will consist of liquidated damages until the work is completed or accepted.

34. Termination for Convenience

(a) The Contracting Officer may terminate this contract in whole, or in part, whenever the Contracting Officer determines that such termination is in the best interest of the PHA. Any such termination shall be effected by delivery to the Contractor of a Notice of Termination specifying the extent to which the performance of the work under the contract is terminated, and the date upon which such termination becomes effective.

(b) If the performance of the work is terminated, either in whole or in part, the PHA shall be liable to the Contractor for reasonable and proper costs resulting from such termination upon the receipt by the PHA of a properly presented claim setting out in detail: (1) the total cost of the work performed to date of termination less the total amount of contract payments made to the Contractor; (2) the cost (including reasonable profit) of settling and paying claims under subcontracts and material orders for work performed and materials and supplies delivered to the site, payment for which has not been made by the PHA to the Contractor or by the Contractor to the subcontractor or supplier; (3) the cost of preserving and protecting the work already performed until the PHA or assignee takes possession thereof or assumes responsibility therefore; (4) the actual or estimated cost of legal and accounting services reasonably necessary to prepare and present the termination claim to the PHA; and (5) an amount constituting a reasonable profit on the value of the work performed by the Contractor.

(c) The Contracting Officer will act on the Contractor's claim within days (60 days unless otherwise indicated) of receipt of the Contractor's claim.

(d) Any disputes with regard to this clause are expressly made subject to the provisions of the Disputes clause of this contract.

35. Assignment of Contract

The Contractor shall not assign or transfer any interest in this contract; except that claims for monies due or to become due from the PHA under the contract may be assigned to a bank, trust company, or other financial institution. Such assignments of claims shall only be made with the written concurrence of the Contracting Officer. If the Contractor is a partnership, this contract shall inure to the benefit of the surviving or remaining member(s) of such partnership as approved by the Contracting Officer.

36. Insurance

(a) Before commencing work, the Contractor and each subcontractor shall furnish the PHA with certificates of insurance showing the following insurance is in force and will insure all operations under the Contract:

(1) Workers' Compensation, in accordance with state or Territorial Workers' Compensation laws.

(2) Commercial General Liability with a combined single limit for bodily injury and property damage of not less than $ _____ [Contracting Officer insert amount]

per occurrence to protect the Contractor and each subcontractor against claims for bodily injury or death and damage to the property of others. This shall cover the use of all equipment, hoists, and vehicles on the site(s) not covered by Automobile Liability under (3) below. If the Contractor has a "claims made" policy, then the following additional requirements apply: the policy must provide a "retroactive date" which must be on or before the execution date of the Contract; and the extended reporting period may not be less than five years following the completion date of the Contract.

(3) Automobile Liability on owned and non -owned motor vehicles used on the site(s) or in connection therewith for a combined single limit for bodily injury and property damage of not less than $ _____ [Contracting Officer insert amount] per occurrence.

(b) Before commencing work, the Contractor shall furnish the PHA with a certificate of insurance evidencing that Builder's Risk (fire and extended coverage) Insurance on all work in place and/or materials stored at the building site(s), including foundations and building equipment, is in force. The Builder's Risk Insurance shall be for the benefit of the Contractor and the PHA as their interests may appear and each shall be named in the policy or policies as an insured. The Contractor in installing equipment supplied by the PHA shall carry insurance on such equipment from the time the Contractor takes possession thereof until the Contract work is accepted by the PHA. The Builder's Risk Insurance need not be carried on excavations, piers, footings, or foundations until such time as work on the superstructure is started. It need not be carried on landscape work. Policies shall furnish coverage at all times for the full cash value of all completed construction, as well as materials in place and/or stored at the site(s), whether or not partial payment has been made by the PHA. The Contractor may terminate this insurance on buildings as of the date taken over for occupancy by the PHA. The Contractor is not required to carry Builder's Risk Insurance for modernization work which does not involve structural alterations or additions and where the PHA's existing fire and extended coverage policy can be endorsed to include such work.

(c) All insurance shall be carried with companies which are financially responsible and admitted to do business in the State in which the project is located. If any such insurance is due to expire during the construction period, the Contractor (including subcontractors, as applicable) shall not permit the coverage to lapse and shall furnish evidence of coverage to the Contracting Officer. All certificates of insurance, as evidence of coverage, shall provide that no coverage may be canceled or non-renewed by the insurance company until at least 30 days prior written notice has been given to the Contracting Officer.

37. Subcontracts

(a) Definitions. As used in this contract -

(1) "Subcontract" means any contract, purchase order, or other purchase agreement, including modifications and change orders to the foregoing, entered into by a subcontractor to furnish supplies, materials, equipment, and services for the performance of the prime contract or a subcontract.

(2) "Subcontractor" means any supplier, vendor, or firm that furnishes supplies, materials, equipment, or services to or for the Contractor or another subcontractor.

(b) The Contractor shall not enter into any subcontract with any subcontractor who has been temporarily denied participation in a HUD program or who has been suspended or debarred from participating in contracting programs by any agency of the United States Government or of the state in which the work under this contract is to be performed.

(c) The Contractor shall be as fully responsible for the acts or omissions of its subcontractors, and of persons either directly or indirectly employed by them as for the acts or omissions of persons directly employed by the Contractor.

(d) The Contractor shall insert appropriate clauses in all subcontracts to bind subcontractors to the terms and conditions of this contract insofar as they are applicable to the work of subcontractors.

(e) Nothing contained in this contract shall create any contractual relationship between any subcontractor and the PHA or between the subcontractor and HUD.

38. Subcontracting with Small and Minority Firms, Women's Business Enterprise, and Labor Surplus Area Firms

The Contractor shall take the following steps to ensure that, whenever possible, subcontracts are awarded to small business firms, minority firms, women's business enterprises, and labor surplus area firms:

(a) Placing qualified small and minority businesses and women's business enterprises on solicitation lists;

(b) Ensuring that small and minority businesses and women's business enterprises are solicited whenever they are potential sources;

(c) Dividing total requirements, when economically feasible, into smaller tasks or quantities to permit maximum participation by small and minority businesses and women's business enterprises;

(d) Establishing delivery schedules, where the requirements of the contract permit, which encourage participation by small and minority businesses and women's business enterprises; and

(e) Using the services and assistance of the U.S. Small Business Administration, the Minority Business Development Agency of the U.S. Department of Commerce, and State and local governmental small business agencies.

39. Equal Employment Opportunity

During the performance of this contract, the Contractor/Seller agrees as follows:

(a) The Contractor/Seller shall not discriminate against any employee or applicant for employment because of of race color, religion, sex, sexual orientation, gender identity, disability, or national origin.

(b) The Contractor/Seller shall take affirmative action to ensure that applicants are employed, and that employees are treated during employment without regard to their race, color, religion, sex, sexual orientation, gender identity, disability, or national origin. Such action shall include, but not be limited to, (1) employment, (2) upgrading demotion, (4) transfer, (5) recruitment or recruitment advertising, (6) layoff or termination, (7) rates of pay or other forms of compensation, and (8) selection for training,including apprenticeship

(c) The Contractor/Seller agrees to post in conspicuous places available to employees and applicants for employment the notices to be provided by the Contracting Officer setting forth the provisions of this nondiscrimination clause.
(d) The Contractor/Seller shall, in all solicitations or advertisements for employees placed by or on behalf of the Contractor/Seller, state that all qualified applicants will receive consideration for employment without regard to race, color, religion, sex, or national origin.
(e) The Contractor/Seller shall send, to each labor union or representative of workers with which it has a collective bargaining agreement or other contract or understanding, the notice to be provided by the Contracting Officer advising the labor union or workers' representative of the Contractor's commitments under this clause, and post copies of the notice in conspicuous places available to employees and applicants for employment.
(f) The Contractor/Seller shall comply with Executive Order 11246, as amended, and the rules, regulations, and orders of the Secretary of Labor.
(g) The Contractor/Seller shall furnish all information and reports required by Executive Order 11246, as amended, Section 503 of the Rehabilitation Act of 1973, as amended, and by rules, regulations, and orders of the Secretary of Labor, or pursuant thereto. The Contractor/Seller shall permit

access to its books, records, and accounts by the Secretary of Labor for purposes of investigation to ascertain compliance with such rules, regulations, and orders.

(h) In the event of a that the Contractor/Seller is in noncompliance with the nondiscrimination clauses of this contract or with any of such rules, regulations, or orders, this contract may be canceled, terminated or suspended in whole or in part and the contractor/seller may be declared ineligible for further Government contracts in accordance with procedures authorized in Executive Order 11246 of September 24, 1965, and such other sanctions may be imposed and remedies invoked as provided in Executive Order 11246 of September 24, 1965, or by rule, regulation, or order of the Secretary of Labor, or as otherwise provided by law.

(i)The contractor/seller will include the provisions of paragraphs (a) through (h) in every subcontract or purchase order unless exempted by rules, regulations, or orders of the Secretary of Labor issued pursuant to section 204 of Executive Order 11246 of September 24, 1965, so that such provisions will be binding upon each sub[contractor/seller] or vendor. The [contractor/seller] will take such action with respect to any subcontract or purchase order as may be directed by the Secretary of Labor as a means of enforcing such provisions in cluding sanctions for noncompliance: Provided, however, that in the event the [contractor/seller] becomes involved in, or is threatened with, litigation with a subcontractor or vendor as a result of such direction, the [contractor/seller] may request the United States to enter into such litigation to protect the interests of the United States.

(j) Compliance with the requirements of this clause shall be to the maximum extent consistent with, but not in derogation of, compliance with section 7(b) of the Indian Self-Determination and Education Assistance Act and the Indian Preference clause of this contract.

40. Employment, Training, and Contracting Opportunities for Low-Income Persons, Section 3 of the Housing and Urban Development Act of 1968.

(a) The work to be performed under this contract is subject to the requirements of Section 3 of the Housing and Urban Development Act of 1968, as amended, 12 U.S.C. 1701u (section 3). The purpose of section 3 is to ensure that employment and other economic opportunities generated by HUD assistance or HUD-assisted projects covered by Section 3, shall, to the greatest extent feasible, be directed to low- and very low-income persons, particularly persons who are recipients of HUD assistance for housing.
(b) The parties to this contract agree to comply with HUD's regulations in 24 CFR Part 75, which implement Section 3. As evidenced by their execution of this contract, the parties to this contract certify that they are under no contractual or other impediment that would prevent them from complying with the Part 75 regulations.
(c) The contractor agrees to send to each labor organization or representative of workers with which the contractor has a collective bargaining agreement or other understanding, if any, a notice advising the labor organization or workers' representative of the contractor's commitments under this section 3 clause and will post copies of the notice in conspicuous places at the work site where both employees and applicants for training and employment positions can see the notice. The notice shall describe the Section 3 prioritization requirements and shall state the minimum percentages of labor hour requirements established in the Benchmark Notice (FR-6085-N-04).
(d) The contractor agrees to include this section 3 clause in every subcontract subject to compliance with regulations in 24 CFR Part 75, and agrees to take appropriate action, as provided in an applicable provision of the subcontract or in this section 3 clause, upon a finding that the subcontractor is in violation of the regulations in 24 CFR Part 75. The contractor will not subcontract with any subcontractor where the contractor has notice or knowledge that the subcontractor has been found in violation of the regulations in 24 CFR Part 75.
(e) Noncompliance with HUD's regulations in 24 CFR Part 75 may result in sanctions, termination of this contract for default, and debarment or suspension from future HUD assisted contracts.
(f) Contracts, subcontracts, grants, or subgrants subject to Section 7(b) of the Indian Self-Determination and Education Assistance Act (25 U.S.C. 5307(b)) or subject to tribal preference requirements as authorized under 101(k) of the Native American Housing Assistance and Self-Determination Act (25 U.S.C. 4111(k)) must provide preferences in employment, training, and business opportunities to Indians and Indian organizations, and are therefore not subject to the requirements of 24 CFR Part 75.

41. Interest of Members of Congress

No member of or delegate to the Congress of the United States of America shall be admitted to any share or part of this contract or to any benefit that may arise therefrom.

42. Interest of Members, Officers, or Employees and Former Members, Officers, or Employees

No member, officer, or employee of the PHA, no member of the governing body of the locality in which the project is situated, no member of the governing body of the locality in which the PHA was activated, and no other public official of such locality or localities who exercises any functions or responsibilities with respect to the project, shall, during his or her tenure, or for one year thereafter, have any interest, direct or indirect, in this contract or the proceeds thereof.

43. Limitations on Payments made to Influence Certain Federal Financial Transactions

(a) The Contractor agrees to comply with Section 1352 of Title 31, United States Code which prohibits the use of Acts Federal appropriated funds to pay any person for influencing or attempting to influence an officer or employee of any agency, a Member of Congress, and officer or employee of Congress, or an employee of a Member of Congress in connection with any of the following covered Federal actions: the awarding of any Federal contract; the making of any Federal grant; the making of any Federal loan; the entering into of any cooperative agreement; or the modification of any Federal contract, grant, loan, or cooperative agreement.

(b) The Contractor further agrees to comply with the requirement of the Act to furnish a disclosure (OMB Standard Form LLL, Disclosure of Lobbying Activities) if any funds other than Federal appropriated funds (including profit or fee received under a covered Federal transaction) have been paid, or will be paid, to any person for influencing or attempting to influence an officer or employee of any agency, a Member of Congress, an officer or employee of Congress, or an employee of a Member of Congress in connection with a Federal contract, grant, loan, or cooperative agreement.

44. Royalties and Patents

The Contractor shall pay all royalties and license fees. It shall defend all suits or claims for infringement of any patent rights and shall save the PHA harmless from loss on account thereof; except that the PHA shall be responsible for all such loss when a particular design, process or the product of a particular manufacturer or manufacturers is specified and the Contractor has no reason to believe that the specified design, process, or product is an infringement. If, however, the Contractor has reason to believe that any design, process or product specified is an infringement of a patent, the Contractor shall promptly notify the Contracting Officer. Failure to give such notice shall make the Contractor responsible for resultant loss.

45. Examination and Retention of Contractor's Records

(a) The PHA, HUD, or Comptroller General of the United States, or any of their duly authorized representatives shall, until 3 years after final payment under this contract, have access to and the right to examine any of the Contractor's directly pertinent books, documents, papers, or other records involving transactions related to this contract for the purpose of making audit, examination, excerpts, and transcriptions.

(b) The Contractor agrees to include in first-tier subcontracts under this contract a clause substantially the same as paragraph (a) above. "Subcontract," as used in this clause, excludes purchase orders not exceeding $10,000.

(c) The periods of access and examination in paragraphs (a) and (b) above for records relating to (1) appeals under the Disputes clause of this contract, (2) litigation or settlement of claims arising from the performance of this contract, or (3) costs and expenses of this contract to which the PHA, HUD, or Comptroller General or any of their duly authorized representatives has taken exception shall continue until disposition of such appeals, litigation, claims, or exceptions.

46. Labor Standards - Davis-Bacon and Related

If the total amount of this contract exceeds $2,000, the Federal labor standards set forth in the clause below shall apply to the development or construction work to be performed under the contract.

(a) Minimum Wages.

(1) All laborers and mechanics employed under this contract in the development or construction of the project(s) involved will be paid unconditionally and not less often than once a week, and without subsequent deduction or rebate on any account (except such payroll deductions as are permitted by regulations issued by the Secretary of Labor under the Copeland Act (29 CFR Part 3)), the full amount of wages and bona fide fringe benefits (or cash equivalents thereof) due at time of payment computed at rates not less than those contained in the wage determination of the Secretary of Labor which is attached hereto and made a part hereof, regardless of any contractual relationship which may be alleged to exist between the Contractor and such laborers and mechanics. Contributions made or costs reasonably anticipated for bona fide fringe benefits under Section 1(b)(2) of the Davis-Bacon Act on behalf of laborers or mechanics are considered wages paid to such laborers or mechanics, subject to the provisions of 29 CFR 5.5(a)(1)(iv); also, regular contributions made or costs incurred for more than a weekly period (but not less often than quarterly) under plans, funds, or programs which cover the regular weekly period, are deemed to be constructively made or incurred during such weekly period. Such laborers and mechanics shall be paid the appropriate wage rate and fringe benefits in the wage determination for the classification of work actually performed, without regard to skill, except as provided in 29 CFR 5.5(a)(4). Laborers or mechanics performing work in more than one classification may be compensated at the rate specified for each classification for the time actually worked therein; provided, that the employer's payroll records accurately set forth the time spent in each classification in which work is performed. The wage determination (including any additional classification and wage rates conformed under 29 CFR 5.5(a)(1)(ii) and the Davis-Bacon poster (WH-1321) shall

be posted at all times by the Contractor and its subcontractors at the site of the work in a prominent and accessible place where it can be easily seen by the workers.

(2) (i) Any class of laborers or mechanics, including helpers, which is not listed in the wage determination and which is to be employed under the contract shall be classified in conformance with the wage determination. HUD shall approve an additional classification and wage rate and fringe benefits therefor only when all the following criteria have been met: (A) The work to be performed by the classification requested is not performed by a classification in the wage determination; and (B) The classification is utilized in the area by the construction industry; and (C) The proposed wage rate, including any bona fide fringe benefits, bears a reasonable relationship to the wage rates contained in the wage determination.

(ii) If the Contractor and the laborers and mechanics to be employed in the classification (if known), or their representatives, and HUD or its designee agree on the classification and wage rate (including the amount designated for fringe benefits where appropriate), a report of the action taken shall be sent by HUD or its designee to the Administrator of the Wage and Hour Division, Employee Standards Administration, U.S. Department of Labor, Washington, DC 20210. The Administrator, or an authorized representative, will approve, modify, or disapprove every additional classification action within 30 days of receipt and so advise HUD or its designee or will notify HUD or its designee within the 30-day period that additional time is necessary.

(iii) In the event the Contractor, the laborers or mechanics to be employed in the classification or their representatives, and HUD or its designee do not agree on the proposed classification and wage rate (including the amount designated for fringe benefits, where appropriate), HUD or its designee shall refer the questions, including the views of all interested parties and the recommendation of HUD or its designee, to the Administrator of the Wage and Hour Division for determination. The Administrator, or an authorized representative, will issue a determination within 30 days of receipt and so advise HUD or its designee or will notify HUD or its designee within the 30-day period that additional time is necessary.

(iv) The wage rate (including fringe benefits where appropriate) determined pursuant to subparagraphs (a)(2)(ii) or (iii) of this clause shall be paid to all workers performing work in the classification under this contract from the first day on which work is performed in classification.

(3) Whenever the minimum wage rate prescribed in the contract for a class of laborers or mechanics includes a fringe benefit which is not expressed as an hourly rate, the Contractor shall either pay the benefit as stated in the wage determination or shall pay another bona fide fringe benefit or an hourly cash equivalent thereof.

(4) If the Contractor does not make payments to a trustee or other third person, the Contractor may consider as part of the wages of any laborer or mechanic the amount of any costs reasonably anticipated in providing bona fide fringe benefits under a plan or program; provided, that the Secretary of Labor has found, upon the written request of the Contractor, that the applicable standards of the Davis-Bacon Act have been met. The Secretary of Labor may require the Contractor to set aside in a separate account assets for the meeting of obligations under the plan or program.

(b) Withholding of funds. HUD or its designee shall, upon its own action or upon written request of an authorized representative of the Department of Labor, withhold or cause to be withheld from the Contractor under this contract or any other Federal contract with the same prime Contractor, or any other Federally-assisted contract subject to Davis-Bacon prevailing wage requirements, which is held by the same prime Contractor, so much of the accrued payments or advances as may be considered necessary to pay laborers and mechanics, including apprentices, trainees, and helpers, employed by the Contractor or any subcontractor the full amount of wages required by the contract. In the event of failure to pay any laborer or mechanic, including any apprentice, trainee, or helper, employed or working in the construction or development of the project, all or part of the wages required by the contract, HUD or its designee may, after written notice to the Contractor, take such action as may be necessary to cause the suspension of any further payment, advance, or guarantee of funds until such violations have ceased. HUD or its designee may, after written notice to the Contractor, disburse such amounts withheld for and on account of the Contractor or subcontractor to the respective employees to whom they are due.

(c) Payrolls and basic records.

(1) Payrolls and basic records relating thereto shall be maintained by the Contractor during the course of the work and preserved for a period of three years thereafter for all laborers and mechanics working in the construction or development of the project. Such records shall contain the name, address, and social security number of each such worker, his or her correct classification, hourly rates of wages paid (including rates of contributions or costs anticipated for bona fide fringe benefits or cash equivalents thereof of the types described in section 1(b)(2)(B) of the Davis-Bacon Act), daily and weekly number of hours worked, deductions made, and actual wages paid. Whenever the Secretary of Labor has found, under 29 CFR 5.5(a)(1)(iv), that the wages of any laborer or mechanic include the amount of costs reasonably anticipated in providing benefits under a plan or program described in section 1(b)(2)(B) of the Davis-Bacon Act, the Contractor shall maintain records which show that the commitment to provide such benefits is enforceable, that the plan or program is financially responsible, and that the plan or program has been communicated in writing to the laborers or mechanics affected, and records which show the costs anticipated or the actual cost incurred in providing such benefits. Contractors employing apprentices or trainees under approved programs shall maintain written evidence of the registration of apprenticeship programs and certification of trainee programs, the registration of the apprentices and trainees, and the ratios and wage rates prescribed in the applicable programs.

(2) (i) The Contractor shall submit weekly for each week in which any contract work is performed a copy of all payrolls to the Contracting Officer for transmission to HUD or its designee. The payrolls submitted shall set out accurately and completely all of the information required to be maintained under subparagraph (c)(1) of this clause. This information may be submitted in any form desired. Optional Form WH-347 (Federal Stock Number 029-005-00014-1) is available for this purpose and may be purchased from the Superintendent of Documents, U.S. Government Printing Office, Washington, D.C. 20402. The Contractor is responsible for the submission of copies of payrolls by all subcontractors. (Approved by the Office of Management and Budget under OMB Control Number 1214-0149.)

(ii) Each payroll submitted shall be accompanied by a "Statement of Compliance," signed by the Contractor or subcontractor or his or her agent who pays or supervises the payment of the persons employed under the contract and shall certify the following:

(A) That the payroll for the payroll period contains the information required to be maintained under paragraph (c) (1) of this clause and that such information is correct and complete;

(B) That each laborer or mechanic (including each helper, apprentice, and trainee) employed on the contract during the payroll period has been paid the full weekly wages earned, without rebate, either directly or indirectly, and that no deductions have been made either directly or indirectly from the full wages earned, other than permissible deductions as set forth in 29 CFR Part 3; and

(C) That each laborer or mechanic has been paid not less than the applicable wage rates and fringe benefits or cash equivalents for the classification of work performed, as specified in the applicable wage determination incorporated into the contract.

(iii) The weekly submission of a properly executed certification set forth on the reverse side of Optional Form WH-347 shall satisfy the requirements for submission of the "Statement of Compliance" required by subparagraph (c)(2)(ii) of this clause.

(iv) The falsification of any of the above certifications may subject the Contractor or subcontractor to civil or criminal prosecution under Section 1001 of Title 18 and Section 3729 of Title 31 of the United States Code.

(3) The Contractor or subcontractor shall make the records required under subparagraph (c)(1) available for inspection, copying, or transcription by authorized representatives of HUD or its designee, the Contracting Officer, or the Department of Labor and shall permit such representatives to interview employees during working hours on the job. If the Contractor or subcontractor fails to submit the required records or to make them available, HUD or its designee may, after written notice to the Contractor, take such action as may be necessary to cause the suspension of any further payment, advance, or guarantee of funds. Furthermore, failure to submit the required records upon request or to make such records available may be grounds for debarment action pursuant to 29 CFR 5.12.

(d) (1) Apprentices. Apprentices will be permitted to work at less than the predetermined rate for the work they performed when they are employed pursuant to and individually registered in a bona fide apprenticeship program registered with the U.S. Department of Labor, Employment and Training Administration, Office of Apprenticeship and Training, Employer and Labor Services (OATELS), or with a State Apprenticeship Agency recognized by OATELS, or if a person is employed in his or her first 90 days of probationary employment as an apprentice in such an apprenticeship program, who is not individually registered in the program, but who has been certified by OATELS or a State Apprenticeship Agency (where appropriate) to be eligible for probationary employment as an apprentice. The allowable ratio of apprentices to journeymen on the job site in any craft classification shall not be greater than the ratio permitted to the Contractor as to the entire work force under the registered program. Any worker listed on a payroll at an apprentice wage rate, who is not registered or otherwise employed as stated in this paragraph, shall be paid not less than the applicable wage rate on the wage determination for the classification of work actually performed. In addition, any apprentice performing work on the job site in excess of the ratio permitted under the registered program shall be paid not less than the applicable wage rate on the wage determination for the work actually performed. Where a contractor is performing construction on a project in a locality other than that in which its program is registered, the ratios and wage rates (expressed in percentages of the journeyman's hourly rate) specified in the Contractor's or subcontractor's registered program shall be observed. Every apprentice must be paid at not less than the rate specified in the registered program for the apprentice's level of progress, expressed as a percentage of the journeyman hourly rate specified in the applicable wage determination. Apprentices shall be paid fringe benefits in accordance with the provisions of the apprenticeship program. If the apprenticeship program does not specify fringe benefits, apprentices must be paid the full amount of fringe benefits listed on the wage determination for the applicable classification. If the Administrator of the Wage and Hour Division determines that a different practice prevails for the applicable apprentice classification, fringes shall be paid in accordance with that determination. In the event OATELS, or a State Apprenticeship Agency recognized by OATELS, withdraws approval of an apprenticeship program, the Contractor will no longer be permitted to utilize apprentices at less than the applicable predetermined rate for the work performed until an acceptable program is approved.

(2) Trainees. Except as provided in 29 CFR 5.16, trainees will not be permitted to work at less than the predetermined rate for the work performed unless they are employed pursuant to and individually registered in a program which has received prior approval, evidenced by formal certification by the U.S. Department of Labor, Employment and Training Administration. The ratio of trainees to journeymen on the job site shall not be greater than permitted under

the plan approved by the Employment and Training Administration. Every trainee must be paid at not less than the rate specified in the approved program for the trainee's level of progress, expressed as a percentage of the journeyman hourly rate specified in the applicable wage determination. Trainees shall be paid fringe benefits in accordance with the provisions of the trainee program. If the trainee program does not mention fringe benefits, trainees shall be paid the full amount of fringe benefits listed in the wage determination unless the Administrator of the Wage and Hour Division determines that there is an apprenticeship program associated with the corresponding journeyman wage rate in the wage determination which provides for less than full fringe benefits for apprentices. Any employee listed on the payroll at a trainee rate who is not registered and participating in a training plan approved by the Employment and Training Administration shall be paid not less than the applicable wage rate in the wage determination for the classification of work actually performed. In addition, any trainee performing work on the job site in excess of the ratio permitted under the registered program shall be paid not less than the applicable wage rate in the wage determination for the work actually performed. In the event the Employment and Training Administration withdraws approval of a training program, the Contractor will no longer be permitted to utilize trainees at less than the applicable predetermined rate for the work performed until an acceptable program is approved.

(3) Equal employment opportunity. The utilization of apprentices, trainees, and journeymen under this clause shall be in conformity with the equal employment opportunity requirements of Executive Order 11246, as amended, and 29 CFR Part 30.

(e) Compliance with Copeland Act requirements. The Contractor shall comply with the requirements of 29 CFR Part 3, which are hereby incorporated by reference in this contract.

(f) Contract termination; debarment. A breach of this contract clause may be grounds for termination of the contract and for debarment as a Contractor and a subcontractor as provided in 29 CFR 5.12.

(g) Compliance with Davis-Bacon and related Act requirements. All rulings and interpretations of the Davis-Bacon and related Acts contained in 29 CFR Parts 1, 3, and 5 are herein incorporated by reference in this contract.

(h) Disputes concerning labor standards. Disputes arising out of the labor standards provisions of this clause shall not be subject to the general disputes clause of this contract. Such disputes shall be resolved in accordance with the procedures of the Department of Labor set forth in 29 CFR Parts 5, 6, and 7. Disputes within the meaning of this clause include disputes between the Contractor (or any of its subcontractors) and the PHA, HUD, the U.S. Department of Labor, or the employees or their representatives.

(i) Certification of eligibility.

(1) By entering into this contract, the Contractor certifies that neither it (nor he or she) nor any person or firm who has an interest in the Contractor's firm is a person or firm ineligible to be awarded contracts by the United States Government by virtue of section 3(a) of the Davis-Bacon Act or 29 CFR 5.12(a)(1).

(2) No part of this contract shall be subcontracted to any person or firm ineligible for award of a United States Government contract by virtue of section 3(a) of the Davis-Bacon Act or 29 CFR 5.12(a)(1).

(3) The penalty for making false statements is prescribed in the U. S. Criminal Code, 18 U.S.C. 1001.

(j) Contract Work Hours and Safety Standards Act. As used in this paragraph, the terms "laborers" and "mechanics" include watchmen and guards.

(1) Overtime requirements. No contractor or subcontractor contracting for any part of the contract work which may require or involve the employment of laborers or mechanics, including watchmen and guards, shall require or permit any such laborer or mechanic in any workweek in which the individual is employed on such work to work in excess of 40 hours in such workweek unless such laborer or mechanic receives compensation at a rate not less than one and one-half times the basic rate of pay for all hours worked in excess of 40 hours in such workweek.

(2) Violation; liability for unpaid wages; liquidated damages. In the event of any violation of the provisions set forth in subparagraph (j)(1) of this clause, the Contractor and any subcontractor responsible therefor shall be liable for the unpaid wages. In addition, such Contractor and subcontractor shall be liable to the United States (in the case of work done under contract for the District of Columbia or a territory, to such District or to such territory), for liquidated damages. Such liquidated damages shall be computed with respect to each individual laborer or mechanic (including watchmen and guards) employed in violation of the provisions set forth in subparagraph (j)(1) of this clause, in the sum of $27 for each calendar day on which such individual was required or permitted to work in excess of the standard workweek of 40 hours without payment of the overtime wages required by provisions set forth in subparagraph (j)(1) of this clause. DOL posts current fines at: https://www.dol.gov/whd/govcontracts/cwhssa.htm#cmp

(3) Withholding for unpaid wages and liquidated damages. HUD or its designee shall upon its own action or upon written request of an authorized representative of the Department of Labor withhold or cause to be withheld, from any moneys payable on account of work performed by the Contractor or subcontractor under any such contract or any Federal contract with the same prime Contractor, or any other Federally-assisted contract subject to the Contract Work Hours and Safety Standards Act, which is held by the same prime Contractor, such sums as may be determined to be necessary to satisfy any liabilities of such Contractor or subcontractor for unpaid wages and liquidated damages as provided in the provisions set forth in subparagraph (j)(2) of this clause.

(k) Subcontracts. The Contractor or subcontractor shall insert in any subcontracts all the provisions contained in this clause, and such other clauses as HUD or its designee may by appropriate instructions require, and also a clause requiring the subcontractors to include these provisions in any lower tier subcontracts. The prime Contractor shall be responsible for the compliance by any subcontractor or lower tier subcontractor with all these provisions.

47. Non-Federal Prevailing Wage Rates

(a) Any prevailing wage rate (including basic hourly rate and any fringe benefits), determined under State or tribal law to be prevailing, with respect to any employee in any trade or position employed under the contract, is inapplicable to the contract and shall not be enforced against the Contractor or any subcontractor, with respect to employees engaged under the contract whenever such non-Federal prevailing wage rate exceeds:

(1) The applicable wage rate determined by the Secretary of Labor pursuant to the Davis-Bacon Act (40 U.S.C. 3141 et seq.) to be prevailing in the locality with respect to such trade;

(b) An applicable apprentice wage rate based thereon specified in an apprenticeship program registered with the U.S. Department of Labor (DOL) or a DOL-recognized State Apprenticeship Agency; or

(c) An applicable trainee wage rate based thereon specified in a DOL-certified trainee program.

48. Procurement of Recovered Materials.

(a) In accordance with Section 6002 of the Solid Waste Disposal Act, as amended by the Resource Conservation and Recovery Act, the Contractor shall procure items designated in guidelines of the Environmental Protection Agency (EPA) at 40 CFR Part 247 that contain the highest percentage of recovered materials practicable, consistent with maintaining a satisfactory level of competition. The Contractor shall procure items designated in the EPA guidelines that contain the highest percentage of recovered materials practicable unless the Contractor determines that such items: (1) are not reasonably available in a reasonable period of time; (2) fail to meet reasonable performance standards, which shall be determined on the basis of the guidelines of the National Institute of Standards and Technology, if applicable to the item; or (3) are only available at an unreasonable price.

( ) Paragraph (a) of this clause shall apply to items purchased under this contract where: (1) the Contractor purchases in excess of $10,000 of the item under this contract; or (2) during the preceding Federal fiscal year, the Contractor: (i) purchased any amount of the items for use under a contract that was funded with Federal appropriations and was with a Federal agency or a State agency or agency of a political subdivision of a State; and (ii) purchased a total of in excess of $10,000 of the item both under and outside that contract.

CONCORD DRIVE APARTMENTS

2950 & 2956 CONCORD DRIVE, OXNARD, CA 93036

CITY OF OXNARD HOUSING AUTHORITY
435 SOUTH D STREET - OXNARD, CA 93030

CONSTRUCTION NOTES

1. PROVIDE WORK AND MATERIALS IN ACCORDANCE WITH THE LATEST RULES AND REGULATIONS OF APPLICABLE STATE AND LOCAL CODES, LAWS, AND STATUES. NOTHING IN THE CONTRACT DOCUMENTS IS TO BE CONSTRUED AS REQUIRING OR PERMITTING WORK CONTRARY TO THESE CODES, LAWS AND STATUES.
2. CONTRACTOR IS RESPONSIBLE FOR MAINTAINING A PERMIT SET OF CONSTRUCTION DOCUMENTS, SPECIFICATIONS, AND ADDENDA ON SITE DURING ALL PHASES OF CONSTRUCTION FOR USE BY ALL TRADES AND SHALL PROVIDE ALL SUBCONTRACTORS WITH CURRENT CONSTRUCTION DOCUMENTS AS REQUESTED. ADDITIONALLY CONTRACTOR SHALL MAINTAIN ON SITE COPIES OF APPLICABLE CODES AND REFERENCE DOCUMENTS, OR HAVE DIRECT ACCESS VIA REMOTE COMPUTER AND/OR INTERNET ACCESS.
3. CONTRACTOR SHALL REVIEW ALL THE CONTRACT DOCUMENTS, THE PROJECT SITE AND BECOME FAMILIAR WITH THE SCOPE OF WORK AND INTENT OF THE CONTRACT DOCUMENTS. IT IS INCUMBENT UPON THE CONTRACTOR TO NOTIFY THE ARCHITECT IMMEDIATELY UPON DISCOVERING DISCREPANCIES OR CONFLICTS IN THE CONTRACT DOCUMENTS. DURING BIDDING, OBTAIN PROPER, WRITTEN CLARIFICATION OF THE DISCREPANCY, CONFLICT, OR UNCLEAR ITEM PRIOR TO SUBMISSION OF BIDS. DURING CONSTRUCTION, DO NOT PROCEED WITH DEMOLITION UNTIL THE DISCREPANCY OR CONFLICT IS RESOLVED.
4. EXAMINATION OF THE SITE AND PORTIONS THEREOF WHICH WILL AFFECT THIS WORK SHALL BE MADE IMMEDIATELY BY THE CONTRACTOR(S), WHO SHALL COMPARE IT WITH THE CONTRACT DOCUMENTS AND SATISFY THEMSELVES AS TO THE CONDITIONS UNDER WHICH WORK IS TO BE PERFORMED. CONTRACTOR(S) SHALL, AT SUCH TIME, CHECK LOCATIONS OF THE EXISTING STRUCTURES AND EQUIPMENT WHICH MAY AFFECT THE WORK. NO ALLOWANCE SHALL BE MADE FOR EXTRA EXPENSE TO WHICH MAY BE MAY BE INCURRED DUE TO FAILURE O NEGLECT ON THEIR PART TO MAKE SUCH EXAMINATION.
5. EACH CONTRACTOR SHALL BE RESPONSIBLE FOR REVIEWING ALL OF THE CONTRACT DOCUMENTS AS THEY RELATE TO THE CONTRACTOR'S WORK. IN ADDITION, EACH CONTRACTOR IS RESPONSIBLE TO COORDINATE THEIR OWNER WORK WITH HE WORK OF OTHER TRADES.
6. THE CONSTRUCTION DOCUMENTS ARE PROVIDED TO ILLUSTRATE THE DESIGN AND GENERAL TYPE OF CONSTRUCTION, MATERIALS, AND WORKMANSHIP THROUGHOUT. THE DOCUMENTS DO NOT ILLUSTRATE EVERY CONDITION. THE CONTRACTOR, IN ASSUMING RESPONSIBILITY FOR THE WORK INDICATED, SHALL COMPLY WITH THE DESIGN INTENT AS WELL AS THE LETTER IN WHICH THEY ARE PREPARED.
7. CONSTRUCTION DOCUMENTS ARE COMPLEMENTARY, AND WHAT IS CALLED FOR BY ANY WILL BE AS BINDING AS IF CALLED FOR BY ALL. ALL WORK SHOWN OR REFERRED TO ON ANY CONSTRUCTION DOCUMENT SHALL BE PROVIDED AS THOUGH ON ALL RELATED DOCUMENTS.
8. WORK LISTED, SHOWN, OR REASONABLY INFERRED ON ANY CONSTRUCTION DOCUMENT SHALL BE PROVIDED BY THE CONTRACTOR, EXCEPT WHERE NOTED OTHERWISE. THE GENERAL CONTRACTOR SHALL CLOSELY COORDINATE HIS WORK WITH THAT OF OTHER CONTRACTORS OR VENDORS AND OWNER TO ASSURE THAT SCHEDULES ARE MET AND THAT WORK IS DONE IN CONFORMANCE TO MANUFACTURER'S REQUIREMENTS.
9. UNLESS OTHERWISE NOTED, WORK SCOPE IS ASSUMED NEW UNLESS NOTED AS EXISTING.
10. THE USE OF THE WORD "PROVIDE" IN CONNECTION WITH ANY SCOPE DEFINED IN THE CONSTRUCTION DOCUMENTS IS INTENDED TO MEAN THAT SUCH SHALL BE FURNISHED, INSTALLED, AND CONNECTED, UNLESS OTHERWISE NOTED.
11. IT IS REQUIRED THAT ALL CONTRACTORS AND THEIR PERSONNEL ARE PROPERLY TRAINED AND COMPETENT TO CONSTRUCT AND OTHERWISE CARRY OUT THE INTENT OF THE WORK INCORPORATED INTO THE CONTRACT DOCUMENTS.
12. THE CONTRACT DOCUMENTS CONSIST OF THE COMPLETE DRAWINGS, PROJECT MANUAL, SPECIFICATIONS, REPORTS, BIDDING INFORMATION AND OTHER INFORMATION PREPARED BY THE ARCHITECT, IT'S CONSULTANTS OR THE CONSULTANTS HIRED BY THE OWNER. IN THE EVENT OF DISCREPANCIES OR CONFLICTS IN THE DOCUMENTS, INFORMATION IN THE SPECIFICATIONS SHALL TAKE PRECEDENCE OVER THE DRAWINGS, AND LARGE SCALE DRAWINGS SHALL TAKE PRECEDENCE OVER THE DRAWINGS, AND LARGE SCALE DRAWINGS SHALL TAKE PRECEDENCE OVER SMALLER SCALE DRAWINGS.
13. THE CONTRACTOR SHALL BE RESPONSIBLE FOR THE DEVELOPMENT, COORDINATION AND SAFE EXECUTION OF CONSTRICTION MEANS, METHODS, SHORING, AND PROCEDURES.
14. AT NO ADDITIONAL COST TO THE OWNER, CONTRACTOR SHALL CORRECT WORK INSTALLED IN CONFLICT WITH THE CONTRACT DOCUMENTS.
15. THE CONTRACTOR SHALL BE RESPONSIBLE FOR INITIATING, MAINTAINING AND SUPERVISING SAFETY PRECAUTIONS AND PROGRAMS IN CONNECTION WITH HIS WORK.
16. CONTRACTOR SHALL PROTECT AREA OF WORK AND NEW OR EXISTING MATERIALS AND FINISHES FROM DAMAGE WHICH MAY OCCUR FROM CONSTRUCTION, DEMOLITION, DUST, WATER, ETC…, AND SHALL PROVIDE AND MAINTAIN TEMPORARY BARRICADES OR ENCLOSURES AS REQUIRED TO PROTECT THE PUBLIC DURING THE PERIOD OF CONSTRUCTION. AT NO ADDITIONAL EXPENSE TO THE OWNER, THE CONTRACTOR SHALL REPAIR OR REPLACE DAMAGE TO NEW AND EXITING MATERIALS, FINISHES, STRUCTURES, AND EQUIPMENT TO THE SATISFACTION OF THE OWNER.
17. CONTRACTORS SHALL EXERCISE CONTROL OVER JOB CLEANING TO PREVENT ANY DIRT, DEBRIS, OR DUST FROM AFFECTING, IN ANY WAY, FINISHED WORK OR EXISTING TO REMAIN WORK OR CREATING A SAFETY HAZARD IN OR OUTSIDE JOBSITE.
18. ONLY APPROVED WORKING DRAWINGS, WITH THE STATEMENT "ISSUED FOR CONSTRUCTION" ON THE COVER SHEET, SHALL BE USED FOR CONSTRUCTION OF THIS PROJECT.
19. DIMENSIONS ON CONSTRUCTION DRAWINGS ARE TO FACE OF STUD WALL OR FACE OF CONCRETE, UNLESS OTHERWISE NOTED. CONTRACTOR SHALL NOT SCALE DRAWINGS. DIMENSIONS NOTED "(E)" MEANING EXISTING ARE TO BE FIELD VERIFIED PRIOR TO LAYING OUT WORK.
20. IN THE CASE OF DIMENSIONS NOTED AS "CLEAR" CONTRACTOR IS RESPONSIBLE FOR REVIEWING PLANS TO DETERMINE ACTUAL THICKNESS OF FINISHES AND MEASURE FROM OUTSIDE FACE OF WALL TO ADJACENT SURFACE.
21. CONTRACTOR SHALL LEAVE JOB SITE AND AFFECTED AREAS CLEAN AND IN AN ORDERLY MANNER READY FOR MOVE IN. THIS IS TO INCLUDE CLEANING OF THE INTERIOR AND EXTERIOR FACES OF NEW AND EXISTING GLASS.

SHEET INDEX

GENERAL	
G-000	COVER SHEET
1 G-001	CONDITIONS OF APPROVAL
STRUCTURAL	
S-1.0	GENERAL NOTES
S-1.1	GENERAL NOTES (CONT.)
S-2.0	FOUNDATION PLAN
S-2.1	FLOOR FRAMING
S-2.2	ROOF FRAMING PLAN
S-3.0	STRUCTURAL DETAILS
S-3.1	STRUCTURAL DETAILS
ARCHITECTURAL	
A-001	SITE PLAN
A-100	DEMO FLOOR PLANS - 1ST & 2ND
A-101	FLOOR PLANS - 1ST & 2ND
A-201	ELEVATIONS
A-301	BUILDING SECTIONS
A-401	LSV - KITCHENS
A-402	LSV - BATHROOM
A-501	SITE DETAILS
A-502	ACCESSIBLE DETAILS
A-503	ROOF, DOOR & WINDOW DETAILS
A-601	SCHEDULES
A-602	WALL LEGEND
1 A-701	MECHANICAL PRODUCT INFORMATION
MECHANICAL	
M-0	HVAC NOTES/DETAILS
M-1	HVAC PLAN
N-1	TITLE 24 CALCS
N-2	TITLE 24 CALCS
PLUMBING	
P-0	PLUMBING NOTES & DETAILS
P-1	PLUMBING PLAN
ELECTRICAL	
EC-001	GENERAL NOTES, SYMBOLS & DETAILS
EC-002	RESIDENTIAL LIGHTING COMPLIANCE FORMS
EC-003	ELECTRICAL SITE PLAN
EC-100	DEMO FLOOR PLANS - 1ST & 2ND
EC-101	ELECTRICAL FLOOR PLANS - 1ST & 2ND

SCOPE OF WORK

SECTION 504 DISABILITY COMPLIANT DESIGN AND MODIFICATION OF EXISTING 2 STORY 5-BEDROOM UNIT, CONVERT UNIT INTO A FIRST FLOOR ONE-BEDROOM ACCESSIBLE UNIT WITH ADDED AREA TO PROVIDE ADEQUATE BEDROOM SIZE; AND A 2-STORY TWO-BEDROOM UNIT NOT ACCESSIBLE BUT MODERNIZED. PROVIDE ONE-HOUR AND SOUND SEPARATION BETWEEN THE TWO UNITS.

PROPERTY & PROJECT INFORMATION

ZONE:
EXISTING: R-4-PD (HIGH RISE RESIDENTIAL - PLANNED DEVELOPMENT)
PROPOSED: R-4-PD (HIGH RISE RESIDENTIAL - PLANNED DEVELOPMENT)

ADDRESS:
2950 & 2956 CONCORD DRIVE, OXNARD, CALIFORNIA 93036

ASSESSOR'S PARCEL NUMBER:
221-0-064-185

APPROVALS REQUIRED:
B&S PERMITS

PROJECT DESCRIPTION

EXISTING BUILDING: Type V-B Not Sprinklered. No change for proposed T.I.
EXISTING OCCUPANCY GROUP: Group R-2 No change for proposed T.I.

CODE ENFORCEMENT JURISDICTION: CITY OF OXNARD - BUILDING AND SAFETY
ZONING JURISDICTION: CITY OF OXNARD - PLANNING DEPARTMENT

CODE	TITLE	EDITION	LOCAL	AMENDMENTS
Administrative	Bldg. Stnds. Admin Code	2019		
Building	California Bldg. Code	2019		
Access Compliance	California Bldg. Code	2019		
Mechanical	California Mech. Code	2019		
Electrical	California Electrical Code	2019		
Plumbing	California Plumbing Code	2019		
Fire Prevention	California Fire Code	2019	YES	
	State Fire Marshall Regs.	2017		
	NFPA 99	2018		
Zoning Code	CITY OF OXNARD			

PROJECT DIRECTORY

OWNER
City of Oxnard Housing Authority
435 South D Street
Oxnard, California, 93030
Housing Director: Emilio Ramirez
Phone: 805-385-8096
Fax: 805-385-7969
E-mail : housingdirector@oxnard.org
Project Manager: Fredi Contreras
Phone: 805-385-7887
Fax: 805-385-7969
E-mail: fredi.contreras@oxnard.org

ARCHITECT
Lauterbach & Associates Architects
Ilona S. Scott, Architect
License Number: C11881
300 Montgomery Avenue
Oxnard, California, 93036
Phone: 805-988-0912
Fax: 805-981-4510
E-Mail: Ilona.scott@la-arch.com

STRUCTURAL/ MECHANICAL/ PLUMBING ENGINEER
All Trade Engineering & Design
Shane Judd
License Numbers: C70991, M3463
17 E. High Street, Suite A
Moorpark, California 93021
Phone: 805-552-4000
E-mail: juddsalltrade@yahoo.com

ELECTRICAL ENGINEER
JMPE Electrical Engineering
John Maloney
License Number: E016083
627 Olive Street
Santa Barbara, California 93101
Phone: 805-569-9216
E-Mail: maloney@jmpe.net

VICINITY MAP

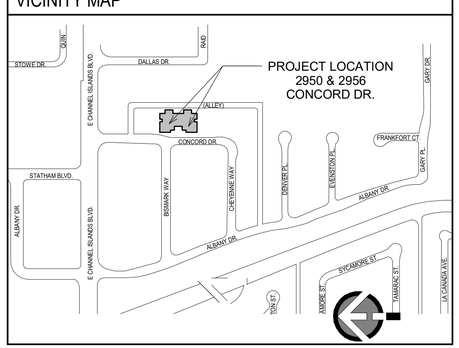

SITE ANALYSIS

SITE AREA: 1.07 AC :	46,609.20 SF	100.00%
BUILDING COVERAGE	13,962.22 SF	29.96%
PAVING AREA:	9,348.76 SF	20.06%
LANDSCAPE AREA:	23,289.22 SF	49.99%
INTERIOR YARD AREA:	14,222.10 SF	30.51%

EXISTING UNITS (RESIDENTIAL)
2-BDRM 1ST FL. 589.00 SF + 2ND FL 385.00 SF = 974.00 SF
3-BDRM 1ST FL. 717.39 SF + 2ND FL 437.40 SF = 1,154.79 SF
4-BDRM 1ST FL. 695.39 SF + 2ND FL 631.77 SF = 1,327.15 SF
5-BDRM 1ST FL. 945.81 SF + 2ND FL 687.77 SF = 1,633.58 SF

MODIFIED 5-BDRM UNITS
SPLIT AND ADDED TO 1ST FL 158.35 SF TO EACH:
1-BDRM 1ST FL (INCLUDING ADDED SF) 552.92 SF
2-BDRM 1ST FL 551.25 SF + 2ND FL 687.75 SF = 1,239.00 SF
EXISTING BEDROOMS: 72
BEDROOMS REMOVED: 4
REVISED TOTAL BEDROOMS: 68

PARKING ANALYSIS

PARKING EXISTING: 36 SPACES (PER 1970 COUNT)
PARKING PROVIDED: 31 SPACES (INCULDS 2 ACCESSIBLE)
EXISTING UNITS: 20 + ADDED 2 UNITS (FROM SPLIT)

TOTAL UNITS: 22

UNIT TYPE	NO. OF UNITS	SPACE REQUIRED
1-BDRM	2	2
2-BDRM	10	20
3-BDRM	4	8
4-BDRM	6	12
5-BDRM	0	0

TOTAL PARKING REQUIRED: 42 SPACES
CONSESSION REQUEST APPLICATION FOR MISSING PARKING SPACES

THESE DRAWINGS AND SPECIFICATIONS ARE THE PROPERTY AND COPYRIGHT OF LAUTERBACH & ASSOCIATES. ALL RIGHTS RESERVED, AND SHALL NOT BE USED ON ANY OTHER WORK OR PROJECT EXCEPT BY WRITTEN AGREEMENT WITH LAUTERBACH & ASSOCIATES. WRITTEN DIMENSIONS SHALL TAKE PRECEDENCE OVER SCALED DIMENSIONS AND SHALL BE VERIFIED ON THE JOB SITE. ANY DISCREPANCY SHALL BE BROUGHT TO THE NOTICE OF LAUTERBACH & ASSOCIATES PRIOR TO COMMENCEMENT OF ANY WORK.

LAUTERBACH & ASSOCIATES
A R C H I T E C T S , I N C.
David C. Kesterson, Architect • Ilona Scott, Architect • Mark S. Pettit, Architect
300 MONTGOMERY AVENUE, OXNARD, CALIFORNIA 93036 | 805-988-0912 | FAX 805-981-4510 | www.la-arch.com

LICENSED ARCHITECT ILONA SCOTT No. C11881 Ren. 06/21 STATE OF CALIFORNIA

CONCORD DRIVE APARTMENTS
2950 & 2956 CONCORD DRIVE
OXNARD, CA, 93036

CITY OF OXNARD HOUSING AUTHORITY
435 S. D STREET
OXNARD, CALIFORNIA 93030

NO	DESCRIPTION	DATE
1	PLAN CHECK SUBMITTAL	08/05/2020

ISSUE

JOB NO. 20-190708

DRAWN BY: TJL
CHECKED BY: ISS
PROJECT MANAGER: ISS
PRINT DATE: 3/28/2023 1:14:01 PM

COVER SHEET

G-000

G:\2019 Projects\20-190708 City of Oxnard-Set 4-Concord\Drawings\Architectural\2950 & 2956 Concord Drive - CD (Site and Elevs).rvt

Community Development Department
Planning Division
214 South C Street
Oxnard, California 93030
(805) 385-7858
Fax (805) 385-7417

CITY OF OXNARD CALIFORNIA

March 27, 2023

Anne Randall, Project Manager
Lauterbach & Associates Architects, Inc.
300 Montgomery Avenue, Unit C
Oxnard, CA 93036

Subject: **Project Name: Concord Unit Improvements; Planning and Zoning Permit Nos. 23-140-06 (Minor Modification to Planned Development Permit No. 132) and 23-535-01 (Density Bonus); Concord Drive Apartments at 2950, 2956 Concord Drive** ***(APN: 221-0-064-185)***

The City of Oxnard has reviewed your request to modify the above-referenced permit and ministerial approval of a Density Bonus. The request includes the conversion of two existing 5-bedroom units into a pair of 1-bedroom units & 2-bedroom units to increase the total unit count from 20 to 22, a 158-square foot addition for two units, ADA parking upgrades resulting in the loss of 2 parking spaces, and a Density Bonus concession (PZ No. 23-535-01) to reduce the required parking in the site to 31.

Existing Land Use: The existing development currently contains five 4,257 square foot apartment buildings with 20 residential townhome units, 33 parking spaces, and 14,222 square-feet of open space on a 1.07-acre project site.

General Plan & Zoning Conformity: The 2030 General Plan land use designation on the subject property is Residential Medium High (RMH) and the Zoning designation is High Rise Residential Zone (R-4 PD). The General Plan and Zoning Designation both allow for the existing multi-family residential development.

Background: The project was originally built in the 1970's by a private developer as market-rated townhomes in accordance with the R-4 development standards. The Planned Development Permit No. 132 allowed the construction of 20 multi-family dwelling units with 36 parking spots. Changes to the site over time led to changes to the parking configuration and number. These include the installation of a second trash enclosure and a ramp to comply with the requirements of the Americans with Disability Act. The changes resulted in a net loss of 3 parking spots thus leaving 33 spaces onsite.

Environmental Determination: In accordance with Section 15301 of the California Environmental Quality Act (CEQA) Guidelines, projects involving "existing facilities where negligible or no expansion of use" may be found to be exempt from the requirements of CEQA. The project consists of improvements to an existing apartment development. The improvement will occur within the existing developed area of the complex. The additional units will be within the existing building footprint with the exception of the small 158 square foot additions.

Furthermore, the site has no habitat value for endangered, rare, or threatened species; is adequately served by public utilities and services, and will have no significant impacts on traffic, noise, air quality, or water. Therefore, Staff has determined that there is no substantial evidence that the project may have a significant effect on the environment.

Analysis: The project consists of minor changes to the existing residential development. Subject to the approval of a Density Bonus Permit the project will continue to comply with the requirements of the R-4 zoning district, as shown in the table below.

DEVELOPMENT STANDARD	ZONING ORDINANCE REQUIREMENTS	PROJECT PROPOSED	PROJECT COMPLIES?
Max. building height 16-73	4 stories not to exceed 45 feet from top of curb; SUP may allow upto11 stories or 100'	2 stories (Approximately 25 feet) - No Change	Existing
Density 16-74	1 unit per 1,500 square feet lot area. 46,609/1,500 = 31 unit maximum Any lot with an average width between 50 and 65' shall comply with the R3 zone standards. No more than 2 du on any lot with an average width between 40'-50' or with an area between 4,000 and 5,000 sqft; No more than 1 du on any lot with an average width less than 40' or an area less than 4,000 sqft.	22 units	Yes
Front yard 16-75	20 feet; 15 feet if access is provided from the alley; 30 feet when abutting designated scenic corridors, per CD-9.4 of the 2030 General Plan.	16 feet (Access provided from the alley)	Yes
Side yard 16-76	5 feet for 1 & 2 stories; shall be increased 2.5' for each story over 2.	5 feet minimum (No Change)	Existing
Street side yard 16-76	Need not exceed 10'	N/A	N/A
Rear yard 16-77 (A)	5 feet for 1 and 2 story buildings and be increase 2.5' for each story over two. Street rear yards shall not exceed 10'	15 feet (No Change)	Existing

Accessory Building 16-67 (B)	May be located in RY setback if the bldg is 6' from the nearest part of the main bldg, is one story in height.	N/A	N/A
Interior yard space 16-78	30% of the lot area, with min. dimension of 15' x 15'. 25% of required IYS may be provided by deck space if minimum 10' x 10' and 200 square feet and directly accessible from the units served. Areas must be open from ground to sky (see exceptions 16-304-16-307).May not include vehicle parking or circulation areas. .	13,936 sq. ft. (30.51%)	Yes
Parking spaces Resident 16-622	1 space in a garage for each 1-bedroom unit, and 2 spaces in a garage for each unit with 2 -5 bedrooms. 3 garage spaces for 6 bedrooms; 4 garage spaces for 7 bedrooms, 5 garage spaces for 8+ bedrooms.	31 spaces	Yes, subject to density bonus concession
Parking spaces Visitor 16-622	For 1st 30 units, 1 visitor space for each unit, and 0.5 visitor spaces per unit thereafter.	None	Yes, subject to density bonus concession
Fences/hedges - front yard 16-308	Must be at least 50% open, and may not exceed 42 inches. Or if a solid wall, then may not exceed 18 inches.	No Fence	Yes
Fences/hedges - side & rear yards 16-309	Not to exceed 7 feet in height.	No Fence	Yes
Parking landscaping 16-641	10-foot wide strip along any street or alley. 5% of parking area. For every 10 spaces, 9 foot finger w/2 trees	No parking landscaping provided parking spaces accessed directly from the alley. No change.	Existing
ATTACHED DWELLING UNIT STANDARDS APPLIES TO PROJECTS OF 6 OR MORE UNITS			
Min. Dwelling Size 16-362(A)	One bedroom: 450 sq.ft Two bedroom: 800 sq.ft	Minimum 1-bedroom Size - 552 Sq. Ft. Minimum 2-bedroom Size -	Yes

		974 Sq.Ft.	
Building Separation 16-362 (B)	Equal to the height of the taller structured	10-feet (No Change)	Existing
Recreation Facilities (12 units or more only) 16-362 (C)	Include at least one of the following: Swimming pool, spa, tennis, basketball, or volleyball courts, BBQ/picnic area, recreation building, exercise course, children's play equipment, or other's as approved by PC	None (No Change)	Existing
Open Area (12 units or more) 16-362 (D)	One landscape area of not less than 2,500 sq.ft. with minimum dimension of not less than 35'	One at 4,511 Sq. Ft	Yes
Distance to garage from DU 16-362 (E)	75'	N/A	N/A
Balconies & Patios 16-362 (F)	All 2nd story dwelling units shall have at least one patio or balcony having a minimum dimension of 10'	All units have private open space.	Yes
Balcony Enclosure 16-362 (G)	All balconies and patios shave have railings or walls which provide at least 50% enclosure	Private space is fenced	Yes
Storage Areas 16-362(H)	Each unit shall have a storage area of at least 225 cubic feet. Can't intrude into the minimum garage dimensions	No Change	Yes
Garages 16-362(I)	Automatic garage door openers and architectural treatment or detail	N/A	N/A
Utility Meters 16-362 (J)	Wall mounted meters shall be screened or integrated into the building design	No Change	Existing
Refuse Enclosures 16-362 (K)	Designed to reflect the major design elements or details of the residential units & provide ped access.	No Change	Existing

The Planned Development Permit entitled the project site to consist of 20 units and 36 parking spaces. As noted in the background section above, as the result of various improvements made over the subsequent years, the site currently contains 33 parking spaces. By dividing the two 5-bedroom units into 2 pairs of 1-bedroom units and 2-bedroom units, the parking requirements for the site increase by 4 spaces (2 spaces for the 1-bedroom units and 2 visitor spaces). Additionally, as required under the California Building Code the site is required to provide ADA spaces due to the site upgrades. These ADA parking spaces necessitate the removal of 2 parking spaces to allow for the ADA loading spaces, thereby reducing the existing parking count from 33 spaces to 31 spaces. The applicant has requested a density bonus (PZ 23-535-01) concession to allow for the reduction of City Parking requirements to 31 spaces.

As noted above, the Project includes an administrative request for a concession pursuant Section 65915(d) of the Government Code and Oxnard City Code (OCC) Section 16-410-L (No. 23-535-01). Under the Government Code and OCC, if a development provides at least 1(of the total units for low income households, at least 5% for very-low income households, or least 10% for persons and families of moderate income households in a common inter development, then the developer is eligible for up to one concession or incentive. As propos the residential units will be designated as 100% affordable housing, which pursuant Government Code Section 65915(d)(2)((D), would make the project eligible for up to four concessions or incentives.

The one concession requested is as follows:

1. Reduction of the required residential parking from 64 spaces to 31 residential spaces.

The site is currently legal non-conforming with regard to the required parking for the site, wh in its current configuration requires 58 parking spaces pursuant to the OCC but only provides parking spaces. As the site is currently fully developed, it is not feasible to provide the additio required parking onsite, without a significant site redesign or the use of vehicle lifts. Both these would result in significant cost, due to the required reconstruction and/or infrastruct improvements required. Therefore, the requested concession allows for the additional afforda units and would result in identifiable and actual cost reductions. Pursuant to changes in Secti 16-410F, the Density Bonus is discretionary and falls under the authority of the decision mai on the underlying permit. As conditioned, and in compliance with state law the project sl provide 5 percent of the units for very-low income households and shall be granted one concession or incentive.

The Project is also proposing two 158 sq. ft. additions to accommodate the entrance to the n units. The resulting development will be a 23,957 sq. ft. townhome project, containing residential townhome units, 31 parking spaces, and 13,936 square-feet of open space. identified in the table above, the proposed addition would not alter the site compliance with standards of the R-4 zone.

The Planning Division approves the requested minor modifications, based upon the follow findings and subject to compliance with the following conditions:

FINDINGS

1. The minor modification is consistent with the 2030 General Plan, the land use and zon designations on the property, and City of Oxnard Planned Development Permit No. 13:
2. The minor modification is categorically exempt from the provisions of the Califor Environmental Quality Act (CEQA), under Section 15301.

3. The proposed improvements do not significantly intensify the use of the parcel or have any additional adverse effect on abutting parcels or the general health, safety, or welfare of the public.

CONDITIONS

1. Applicant shall obtain a building permit for any new construction or modifications to structures, including interior modifications, authorized by this permit.
2. This permit is granted for the plans dated March 27, 2023 on file with the Planning Division. The project plans shall conform to the plans, except as otherwise specified in these conditions.
3. Before the City issues building permits, Developer shall include a copy of this approval letter with all sets of construction documents and specifications for the project.
4. Prior to issuance of building permits, Developer shall correct all violations of the City Code existing on the project property for which the Code Compliance Division has open cases.
5. Prior to issuance of building permits, Applicant shall pay a document imaging fee for the Planning files in an amount calculated by Planning staff at the time of building permit review based on fees then in effect.
6. Developer shall complete the "Notice of Land Use Restrictions and Conditions" form, using the form provided by the City, for recording with the Ventura County Recorder. Before the City issues building permits, Developer shall submit the original completed, signed and notarized document, together with the required fees to the Planning Manager. (PL, G-8)
7. Prior to issuance of building permits, Developer shall enter into an agreement in a form approved by the City Attorney or provide evidence of existing agreement ensuring the continued availability of ten (10) percent of the units (2) must be rented at a level affordable to persons of families of low income, which qualified the applicant for a Density Bonus. The agreement shall be recorded in the Office of the Ventura County Recorder. The agreement shall establish specific compliance standards and specific remedies available to the City of such compliance standards are not met. The agreement shall, among other things, specify the number of low income affordable units by number of bedrooms, standards for qualifying household incomes or other qualifying criteria, a required annual report, and monitoring fees. Developer hereby agrees to deposit funds for any staff time expended for preparation of the agreement and subsequent compliance with said agreement. The term of the agreement shall be for a minimum of 55 years.
8. Prior to offering the affordable units for rent, the Owner/Developer must submit to the Housing Director the proposed rental amounts for the affordable units for review and approval.

9. Developer agrees, as a condition of adoption of this resolution, at Developer's own expense, to indemnify, defend and hold harmless the City and its agents, officers and employees from and against any claim, action or proceeding to attack, review, set aside, void or annul the approval of the resolution or any condition attached thereto or any proceedings, acts or determinations taken, done or made prior to the approval of such resolution that were part of the approval process. (CA, G-6)
10. This minor modification shall automatically become null and void 24 months from the date of this approval, unless Applicant has diligently developed the proposed project, as shown by the issuance of a grading, foundation, or building permit and the construction of substantial improvements.
11. Except as modified by this request, all permit conditions of Planned Development Permit No. 132 shall remain in full force and effect.

This letter serves as official approval of your minor modification and density bonus requests, and pertains only to those modifications described herein. Enclosed is a set of the approved plans, for your use and/or your records. If you have any questions about this approval, please call Alex Tellez, Assistant Planner, at (805) 385-3923 or alex.tellez@oxnard.org.

Sincerely,

Joe Pearson II,
Planning & Environmental Services Manager

3/27/2023
Date

Attachments:
1) Approved Project Plans
2) Notice of Land Use Restrictions

Cc:
David Kesterson, Architect, via email (david.kesterson@la-arch.com)
Fredi Contreras, Project Manager, via email (fredi.contreras@oxnard.org)

LAUTERBACH & ASSOCIATES
ARCHITECTS INC.
David C. Kesterson, Architect • Ilona Scott, Architect • Mark S. Pettit, Architect
300 MONTGOMERY AVENUE, OXNARD, CALIFORNIA 93036 | 805-988-0912 | FAX 805-981-4910 | www.la-arch.com

LICENSED ARCHITECT ILONA SCOTT No. C11881 Ren. 06/21 STATE OF CALIFORNIA

CONCORD DRIVE APARTMENTS
2950 & 2956 CONCORD DRIVE
OXNARD, CA, 93036

CITY OF OXNARD HOUSING AUTHORITY
435 S. D STREET
OXNARD, CALIFORNIA 93030

NO	DESCRIPTION	DATE

ISSUE

JOB NO. 20-190708

DRAWN BY: Author
CHECKED BY: Checker
PROJECT MANAGER: Approver
PRINT DATE: 3/28/2023 1:12:14 PM

CONDITIONS OF APPROVAL

G-001

THESE DRAWINGS AND SPECIFICATIONS ARE THE PROPERTY AND COPYRIGHT OF LAUTERBACH & ASSOCIATES. ALL RIGHTS RESERVED AND SHALL NOT BE USED ON ANY OTHER WORK OR PROJECT EXCEPT BY WRITTEN AGREEMENT WITH LAUTERBACH & ASSOCIATES. WRITTEN DIMENSIONS SHALL TAKE PRECEDENCE OVER SCALED DIMENSIONS AND SHALL BE VERIFIED ON THE JOB SITE. ANY DISCREPANCY SHALL BE BROUGHT TO THE NOTICE OF LAUTERBACH & ASSOCIATES PRIOR TO COMMENCEMENT OF ANY WORK.

G:\2019 Projects\20-190708 City of Oxnard Set 4-Concord\Drawings\Architectural\2950 & 2956 Concord Drive - CD (Site and Elevs).rvt

STRUCTURAL GENERAL NOTES

GENERAL NOTES

1. EACH CONTRACTOR SHALL CHECK AND VERIFY ALL DIMENSIONS AND CONDITIONS AT THE PROJECT SITE BEFORE EXECUTING ANY WORK. HE SHALL NOTIFY THE OWNER, ARCHITECT AND STRUCTURAL ENGINEER OF ANY AND ALL DISCREPANCIES BEFORE PROCEEDING. FOR CLARIFICATION OF DIMENSIONS, DO NOT SCALE FROM DRAWINGS. NUMERICAL DIMENSIONS SHALL TAKE PRIORITY OVER SCALING THE DRAWING.
2. THE LATEST EDITION OF THE GENERAL CONDITIONS AS ACCEPTED BY THE A.I.A. SHALL BE CONSIDERED AS PART OF THESE SPECIFICATIONS.
3. ALL WORK SHALL COMPLY WITH THE 2019 CBC REQUIREMENTS, AND BE APPLICABLE WITH LOCAL CITY ORDINANCES.
4. THE CONTRACTOR SHALL REVIEW THE PLANS AND SPECIFICATIONS WITH THE STRUCTURAL ENGINEER BEFORE BEGINNING CONSTRUCTION.
5. EACH CONTRACTOR SHALL OBTAIN & PAY FOR ALL PERMITS REQUIRED BY LOCAL AUTHORITIES BEFORE PROCEEDING WITH HIS RESPECTIVE INSTALLATION. HE SHALL ALSO ARRANGE & PAY FOR ALL INSPECTIONS AND EXAMINATIONS REQUIRED BY THOSE AUTHORITIES.
6. ALL EXISTING EQUIPMENT REMOVED BY DEMOLITION OR REHABILITATION SHALL BE DISPOSED OF AS DIRECTED BY THE OWNER.
7. REPAIR AND REPLACE ALL PROPERTY DAMAGE BY WORK UNDER THIS PROJECT TO THE SATISFACTION OF THE OWNER AND THE ARCHITECT. ALL PIPING, CONDUIT, ETC. WHICH IS ENCOUNTERED SHALL BE CALLED TO THE ATTENTION OF THE OWNER AND THE ARCHITECT AND SHALL BE ADEQUATELY SUPPORTED UNTIL PERMANENT SUPPORT IS PROVIDED OR REMOVAL IS AUTHORIZED.
8. WHEREVER IN THESE DRAWINGS ANY MATERIAL OR PROCESS IS INDICATED, IT IS FOR THE PURPOSE OF FACILITATING THE DESCRIPTION OF THE MATERIAL OR PROCESS DESIRED. THE CONTRACTOR MAY OFFER ANY MATERIAL OR PROCESS DEEMED EQUIVALENT BY THE OWNER, ARCHITECT AND STRUCTURAL ENGINEER TO THAT MATERIAL OR PROCESS INDICATED OR SPECIFIED.
9. EACH CONTRACTOR SHALL GUARANTEE, BE RESPONSIBLE FOR, & MAKE GOOD ANY AND ALL DEFECTS DUE TO FAULTS OF HIS TRADE FOR LABOR, LEAKS, OR MATERIALS FOR A PERIOD OF ONE YEAR MINIMUM FOLLOWING THE ACCEPTANCE OF THE WORK BY THE OWNER AND ARCHITECT.
10. THE CONTRACTOR SHALL SUPERVISE & DIRECT THE PROJECT DESCRIBED HEREIN. THE CONTRACTOR SHALL BE SOLELY RESPONSIBLE FOR ALL CONSTRUCTION MEANS, METHODS, TECHNIQUES, SEQUENCES & PROCEDURES AND FOR COORDINATING ALL PORTIONS OF THE WORK UNDER CONTRACT. CONTRACTOR HAS SOLE RESPONSIBILITY FOR THE SAFETY & PERFORMANCE OF THE WORK. SAFETY COMPLIANCE SHALL BE IN ACCORDANCE WITH OSHA, U.S. DEPT. OF LABOR, STATE AND LOCAL REQUIREMENTS.
11. THE CONTRACTOR SHALL FURNISH AND BE RESPONSIBLE FOR ADEQUATE SHORING, BRACING, AND PROTECTIVE MEASURES TO SAFELY EXECUTE THE WORK.

GREEN BUILDING NOTES

1. PROVIDE FLASHING FOR ALL NEW ROOF VALLEYS, AROUND NEW WINDOWS, DOORS & AT NEW CHIMNEYS TO ROOF INTERSECTIONS.
2. ALL MATERIALS DELIVERED TO THE CONSTRUCTION SITE SHALL BE PROTECTED FROM RAIN OR OTHER SOURCES MOISTURE.
3. NEW HARDWOOD, PLYWOOD, PARTICLE BOARD, AND MEDIUM DENSITY FIBERBOARD COMPOSITE WOOD PRODUCTS USED IN THE INTERIOR OR EXTERIOR OF THE BUILDING SHALL MEET THE FORMALDEHYDE LIMITS LISTED IN TABLE 4.504.5
4. THE FORMALDEHYDE EMISSIONS FORM, FORM GRN 3 SHALL BE COMPLETED PRIOR TO FINAL INSPECTION APPOVAL. THE MFR'S SPECIFICATIONS SHOWING FORMALDEHYDE CONTENT FOR ALL APPLICABLE WOOD PRODUCTS SHALL BE READILY AVAILABLE AT THE JOB SITE & BE PROVIDED TO THE FIELD INSPECTOR FOR VERIFICATION.
5. A 4" THK. BASE OF 1/2" OR LARGER CLEAN AGGREGATE SHALL BE PROVIDED FOR THE PROPOSED SLAB ON GRADE CONSTRUCTION.
6. A VAPOR BARRIER SHALL BE PROVIDED IN DIRECT CONTACT WITH CONCRETE FOR THE PROPOSED SLAB ON GRADE CONSTRUCTION.
7. BUILDING MATERIALS WITH VISIBLE SIGNS OF WATER DAMAGE SHALL NOT BE INSTALLED. WALL AND FLOOR FRAMING SHALL NOT BE ENCLOSED UNTIL IT IS INSPECTED AND FOUND TO BE SATISFACTORY BY THE BUILDING INSPECTOR.
8. NEW RESIDENTIAL GRADE EQUIPMENT & APPLIANCES PROVIDED AND INSTALLED SHALL BE ENERGY STAR LABELED IF ENERGY STAR IS APPLICABLE TO THAT EQUIPMENT OR APPLIANCE.
9. ALL DUCT AND OTHER RELATED AIR DISTRIBUTION COMPONENT OPENINGS SHALL BE COVERED WITH TAPE, PLASTIC, OR SHEET METAL UNTIL THE FINAL STARTUP OF THE HEATING & COOLING EQUIPMENT.
10. ARCHITECTURAL PAINTS & COATINGS, ADHESIVES, CAULK & SEALANTS SHALL COMPLY WITH THE VOLATILE ORGANIC COMPOUND (VOC) LIMITS LISTED IN TABLE 4.504.3
11. CONSTRUCTION WASTE SHALL BE REDUCED BY 50% AND SHALL BE HANDLED BY A CITY CERTIFIED HAULER.
12. THE HVAC, REFRIGERATION & FIRE SUPPRESSION EQUIPMENT SHALL NOT CONTAIN CFC OR HALONS.
13. AN AIR FILTER WITH A MINIMUM EFFICIENCY REPORTING VALUE (MERV) OF 8 OR HIGHER SHALL BE INSTALLED IN THE MECHANICAL SYSTEM FOR OUTSIDE AND RETURN AIR PRIOR TO OCCUPANCY.
14. THE VOC CONTENT VERIFICATION CHECKLIST, FORM GRN 2, SHALL BE COMPLETED AND VERIFIED PRIOR TO FINAL INSPECTION APPROVAL. THE MANUFACTURER'S SPECIFICATIONS SHOWING VOC CONTENT FOR ALL APPLICABLE PRODUCTS SHALL BE READILY AVAILABLE AT THE JOB SITE & BE PROVIDED TO THE FIELD INSPECTOR FOR VERIFICATION.
15. INSTALLED AUTOMATIC IRRIGATION SYSTEM CONTROLLERS SHALL BE WEATHER OR SOIL MOISTURE BASED CONTROLLERS (CGBSC 4.304.1)
16. RETENTION BASINS OF SUFFICIENT SIZE SHALL BE UTILIZED TO RETAIN STORM WATER ON THE SITE.
17. WHERE STORM WATER IS CONVEYED TO A PUBLIC DRAINAGE SYSTEM, COLLECTION POINT, GUTTER OR SIM. DISPOSAL METHOD, WATER SHALL BE FILTERED BY USE OF A BARRIER SYSTEM, WATTLE OR OTHER METHOD APPROVED BY THE ENFORCING AGENCY.
18. COMPLIANCE WITH A LAWFULLY ENACTED STORM WATER MANAGEMENT ORDINANCE

FRAMING NOTES

1. ALL FRAMING AND CARPENTRY SHALL BE DONE IN ACCORDANCE WITH THOSE APPLICABLE SECTIONS OF CHAPTER 23 OF THE LATEST ADOPTED EDITION OF THE CBC AND DETAILS INDICATED ON THE DRAWINGS.
2. ALL STRUCTURAL LUMBER SHALL BE DOUG FIR–LARCH GRADE IN ACCORDANCE WITH THE LATEST EDITION OF "GRADING AND DRESSING RULES #16 OF THE WEST COAST LUMBER INSPECTION BUREAU" AND SHALL HAVE A MOISTURE CONTENT OF 19% MAX OF THE FOLLOWING GRADES:

RAFTERS AND JOISTS	#2 AND BETTER	UNLESS NOTED OTHERWISE
BEAMS	#1	
POSTS	SELECT STRUCTURAL	
STUDS, PLATES, ALL OTHERS	STUD GRADE	

NOTIFY ENGINEER IF OTHER SPECIES OF WOOD ARE DELIVERED TO THE SITE OR ARE PART OF THE EXISTING BUILDING.

3. WOOD FRAMING MEMBERS (INCLUDING WOOD SHEATHING) THAT REST ON CONCRETE AND ARE LESS THAN 8 INCHES FROM EXPOSED EARTH SHALL BE OF NATURALLY DURABLE OR PRESERVATIVE–TREATED WOOD.
4. STRUCTURAL MEMBER CUTS, NOTCHES, AND BORES SHALL BE PER 1/S–3.0
5. 2x SOLID BLOCK SHALL BE PLACED BETWEEN JOISTS OR RAFTERS AND AT ALL SUPPORTS.
6. ALL BOLTS TO HAVE FLAT WASHERS UNDER HEAD AND NUT AND AT ALL HOLDOWN BOLTS AND ANCHOR BOLTS. ALL BOLT HOLES SHALL BE 1/32" (MIN), 1/16" (MAX) OVER–SIZED (INSPECTOR TO VERIFY). PROVIDE LEAD HOLE 40–70% OF THREADED SHANK DIA. & FULL DIA. FOR SMOOTH SHANK PORTION.
7. ALL PLYWOOD EXPOSED TO WEATHER SHALL BE EXTERIOR GRADE. WOOD STRUCT. PANELS SHALL COMPLY WITH PS1–09 DOUG FIR–LARCH AND/OR PS2–10 OSB.
8. FRAMING SURROUNDING ALL METAL FIREPLACE VENTS SHALL BE CONTINUOUS 2X4 STUDS @ 16" O.C. SHEATHED WITH 1/2" STRUCT 1 PLYWOOD AND WITH DRAFT STOPS @ 10'–0" o.c. MAX. (FOR PLYWOOD NAILING, SEE ROOF NAILING SCHEDULE.)
9. GLU–LAMINATED MEMBERS SHOULD BE FABRICATED IN ACCORDANCE WITH BUILDING DEPARTMENT STANDARDS AND A.I.T.C. 117–79. A CERTIFICATE OF INSPECTION TO BE SUBMITTED TO THE BUILDING DEPARTMENT PRIOR TO ERECTION. SIMPLE SPAN GLU–LAMS ARE TO BE COMBINATION 24F–V4 CANTILEVER GLU–LAMS TO BE COMBINATION 24F–V6.
10. COMPOSITE FRAMING MEMBERS SHALL BE BY TRUSS JOIST WEYERHAEUSER / BOISE CASCADE U.N.O. FOLLOW MANUFACTURER'S RECOMMENDATIONS FOR STORAGE & INSTALLATION.

MICROLLAM:	1.8E WS MICROLLAM LVL
PARALLAM / VERSA LAM:	2.0E WS PARALLAM PSL / Fb = 3100psi
TIMBERSTRAND:	TIMBERSTRAND LSL RIMBOARD 1 1/2" WIDE 1.5E TIMBERSTRAND LSL HEADER 3 1/2" WIDE

11. PROVIDE 2X6 STUDS IN PLUMBING WALLS TO PREVENT EXCESSIVE NOTCHING AND BORING OF STUDS
12. PROVIDE TWO LAYERS OF GRADE D PAPER BETWEEN SHEAR PANEL AND LATH
13. FIRE BLOCKING SHALL BE INSTALLED AT 20 FT. MAX. INTERVALS AND SHALL BE INSTALLED SO THAT THERE WILL NOT BE OPEN SPACES EXCEEDING 100 SQ. FT. WITHIN CONCEALED SPACES OF EXTERIOR WALL FINISH AND OTHER EXTERIOR ARCHITECTURAL ELEMENTS ERECTED OF COMBUSTIBLE CONSTRUCTION.
14. FIRE BLOCK STUD WALLS AND PARTITIONS (HORIZONTALLY AT 10 FT INTERVALS AND VERTICALLY AT THE CEILING AND FLOOR LEVELS), ENCLOSED AND CONCEALED SPACES, AND AT OPENINGS AROUND VENTS, PIPES, DUCTS, CHIMNEYS, BETWEEN ATTIC AND CHIMNEY CHASE, AT STAIR STRINGERS, AND SIMILAR PLACES AT CEILING AND FLOOR LEVELS.
15. FLOOR JOISTS, CEILING JOISTS, AND RAFTERS 12" OR MORE IN DEPTH SHALL BE SUPPORTED LATERALLY BY BRIDGING AT INTERVALS NOT EXCEEDING 8 FT., UNLESS BOTH EDGES ARE HELD IN LINE.

SOILS ENGINEERING

1. THE SOILS REPORT, NUMBER N/A PREPARED BY N/A DATED N/A IS PART OF THESE PLANS AND ALL RECOMMENDATIONS THEREIN SHALL BE COMPLIED WITH.
2. SPREAD FOOTINGS – ALLOWABLE BEARING = 1500 PSF
   CONTINUOUS FOOTINGS – ALLOWABLE = 1500 PSF
   COEFFICIENT OF FRICTION – ALLOWABLE = 0.25
   PASSIVE EARTH PRESSURE – ALLOWABLE = 250 PCF
   EXPANSIVE INDEX = _____
3. CANTILEVER RETAINING WALLS:
   EQUIVALENT FLUID PRESSURE – 35 PCF & 43 PCF
4. RESTRAINED RETAINING WALLS:
   EQUIVALENT FLUID PRESSURE – 35 PCF & 43 PCF
5. THE ABOVE VALUES MAY BE INCREASED BY 1/3 FOR WIND AND SEISMIC LOADS
6. THE ENGINEER HAS INSPECTED THE SUPPORTING SOILS ON THE SITE AND IS KNOWLEDGEABLE OF THE SOILS IN THE AREA. FINDINGS ARE AS FOLLOWS:
   (1) THE EXISTING FOUNDATION APPEARS TO BE IN A SUFFICIENT STRUCTURAL CONDITION TO BE ADEQUATE TO SUPPORT THE PROPOSED STRUCTURE
7. ALL GRADING, SLAB, FOOTING, AND PAD PREPARATION WORK SHALL COMPLY WITH THE RECOMMENDATIONS AS STATED IN THE REFERENCED REPORT ABOVE
8. PRIOR TO THE CONTRACTOR REQUESTING A BUILDING DEPARTMENT FOUNDATION INSPECTION, THE SOILS ENGR SHALL ADVISE THE BUILDING OFFICIAL IN WRITING THAT:
   (1) THE BUILDING PAD WAS PREPARED IN ACCORDANCE WITH THE SOILS REPORT
   (2) THE UTILITY TRENCHES HAVE BEEN PROPERLY BACKFILLED AND COMPACTED
   (3) THE FOUNDATION EXCAVATIONS COMPLY WITH THE INTENT OF THE SOILS REPORT

CONTACT INFORMATION

ALL–TRADE ENGINEERING
SHANE JUDD, P.E.
(805) 552–4000
17 EAST HIGH STREET
MOORPARK, CA 93021

NAILING SCHEDULE

TABLE (2304.10.1)

	ELEMENT/CONNECTION	FASTENER	LOCATION
	ROOF		
1.	Blocking between ceiling joists, rafters or trusses to top plate or other framing below	3 - 8d common (21/2" × 0.131") 3-10d box (3"x0.128") 3 - 3" × 0.131" nails 3 - 3" 14 gage staples, 7/16" crown	Toenail each end
	Blocking between rafters or truss not at the wall top plate, to rafter or truss	2 - 8d common (21/2" × 0.131") 2 - 3" × 0.131" nails 2 - 3" 14 gage staples	toenail each end
		2-16d common (3 ½"x0.162") 3-3"x0.131" nails 3-3" 14 gage staples	end nail
	Flat blocking to truss and web filler	16d common (3 ½"x0.162") @6" o.c. 3-3"x0.131" nails @ 6" o.c. 3-3" 14 gage staples @ 6" o.c.	Face nail
2.	Ceiling joists to top plate	3-8d common 3-10d box 3-3"x0.131" nails 3-3" 14 gage staples, 7/16" crown	Toenail each joist
3.	Ceiling joist not attached to parallel rafter, laps over partitions (no thrust) (Table and Section2308.7.3.1)	3-16d common 4-10d box 4-3"x0.131" nails 4-3" 14 gage staples, 7/16" crown	Face nail
4.	Ceiling joists attached to parallel rafter (heel joint) (Table and Section2308.7.3.1)	Table 2308.7.3.1	Face nail
5.	Collar tie to rafter	3-10d common 4-10d box 4-3"x0.131" nails 4-3" 14 gage staples, 7/16" crown	Face nail
6.	Rafter or roof truss to top plate (Table and section 2308.7.5)	3-10 common 3-16d box 4-10d box 4-3"x0.131" nails 4-3" 14 gage staples, 7/16" crown	Toenail (c)
7.	Roof rafters to ridge valley or hip rafters; or roof rafter to 2" ridge beam	2-16d common 3-10d box 3-3"x0.131" nails 3-3" 14 gage staples, 7/16" crown	End nail
		3-10d common 3-16d box 4-10d box 4-3"x0.131" nails 4- 3" 14 gage staples, 7/16" crown	Toenail
	WALL		
8.	Stud to Stud (not at braced wall panels)	16d common	24" o.c. face nail
		10d box 3"x0.131" nails 3" 14 gage staples, 7/16" crown	16" o.c. face nail
9.	Stud to stud and abutting studs at intersecting wall **corners (at braced wall panels)**	16d common	16" o.c. face nail
		16d box	12" o.c. face nail
		3"x0.131" nails 3" 14 gage staples, 7/16" crown	12" o.c. face nail
10.	Built-up header	16d common	16" o.c. each edge, face nail
		16d box	12" o.c. each edge, face nail
11.	Continuous header to stud	4-8d common 4-10d box	Toenail
12.	Top plate to top plate	16d common	16" o.c. face nail
		10d box 3"x0.131" nails **3" 14 gage staples, 7/16" crown**	12" o.c. face nail

CONCRETE NOTES

1. ALL CONCRETE SHALL HAVE 2500 psi MINIMUM COMPRESSIVE STRENGTH AT 28 DAYS. ALL GRADE BEAMS SHALL HAVE 3000 psi MINIMUM COMPRESSIVE STRENGTH AT 28 DAYS. ALL PILES SHALL HAVE 4000 psi MINIMUM COMPRESSIVE STRENGTH AT 28 DAYS. CONCRETE SHALL BE MECHANICALLY VIBRATED DURING PLACEMENT. DEPUTY INSPECTION REQUIRED FOR ALL CONCRETE GREATER THAN 3000 psi.
2. THE MINIMUM CEMENT CONTENT SHALL BE 6 SACKS MINIMUM PER CUBIC YARD.
3. THE MAXIMUM CONCRETE SLUMP SHALL BE 4 INCHES, PLUS OR MINUS 1 INCH.
4. CEMENT FOR CONCRETE SHALL BE STANDARD BRAND TYPE II, LOW ALKALI, PER ASTM C–150.
5. AGGREGATE SHALL CONFORM TO ASTM C–33, 1 INCH MAXIMUM SIZE, SIZE NUMBER 67 AGGREGATE. A MINIMUM 3"DIA. HOSE FOR PLACING CONCRETE IS REQUIRED. PEA GRAVEL MIXES ARE NOT ALLOWED.
6. WATER REDUCING AGENTS SHALL BE USED TO REDUCE WATER/CEMENT RATIO.
7. FASTENERS FOR PRESERVATIVE TREATED AND FIRE–RETARDANT–TREATED WOOD SHALL BE OF HOT DIPPED ZINC–COATED GALVANIZED STEEL, STAINLESS STEEL, SILICON BRONZE OR COPPER. THE COATING WEIGHTS FOR ZINC–COATED FASTENERS SHALL BE IN ACCORDANCE WITH ASTM A153. FASTENERS OTHER THAN NAILS, TIMBER RIVETS, WOOD SCREWS, AND LAG SCREWS SHALL BE PERMITTED TO BE OF MECHANICALLY DEPOSITED ZINC–COATED STEEL WITH COATING WEIGHTS IN ACCORDANCE WITH ASTM B695, CLASS 55 MIN.
8. ALL EPOXY USED SHALL BE SIMPSON SET–XP EPOXY LARR #25744. DEPUTY INSP REQ'D
9. ALL HOLDOWN ANCHORS AT SHEARWALLS SHALL BE HELD FIRMLY IN PLACE BY A TEMPLATE PRIOR TO FOUNDATION INSPECTION AND POURING CONCRETE. EXACT HOLDOWN LOCATION MUST BE COORDINATED BETWEEN CONCRETE CONTRACTOR AND FRAMING CONTRACTOR.
10. SOIL COMPACTION REPORT SHALL BE PROVIDED TO THE BUILDING INSPECTOR AT THE JOBSITE PRIOR TO PLACEMENT OF CONCRETE FOR THE FOUNDATION.
12. THE CONTRACTOR AND SUB–CONTRACTOR SHALL VERIFY ALL CONDITIONS SHOWN ON PLANS AT THE SITE PRIOR TO COMMENCING WORK.
13. THE REINFORCING STEEL SHALL BE INTERMEDIATE GRADE, DEFORMED BARS CONFORMING TO A.S.T.M. A–615 GRADE 60. THE PLACING OF REINFORCING STEEL SHALL BE IN ACCORDANCE WITH CHAPTER 19 OF THE 2019 CBC.
14. CRACK CONTROL JOINTS, ONE–QUARTER OF THE SLAB DEPTH, TO BE SAWCUT 10' TO 15' O.C. EACH WAY WITHIN 24 HOURS OF POUR.
15. STEEL PLATE WASHERS SHALL BE A MINIMUM OF 3"X3"X.229" AND SHALL BE PLACED BETWEEN THE FOUNDATION SILL PLATE AND THE NUT
16. HOLD–DOWN ANCHORS MUST BE RE–TIGHTENED JUST PRIOR TO COVERING THE WALL FRAMING
17. A CORROSION–RESISTANT WEEP SCREED IS REQUIRED BELOW STUCCO A MINIMUM OF 4"/2" ABOVE GRADE/SLAB.
18. PROVIDE 5/8" DIAMETER X 10" MINIMUM ANCHOR BOLTS WITH 7" EMBEDMENT SPACED NOT MORE THAN 4 FT. APART AND NOT MORE THAN 12" OR LESS THAN 4" FROM EACH END PIECE
19. MINIMUM CONCRETE STEMWALL THICKNESS IS 7.5"
20. ALL HDU HOLD–DOWNS TO HAVE SDS2.5 SCREWS PER MANUFACTURER'S CATALOG.

NAILING SCHEDULE (CONT'D)

	ELEMENT/CONNECTION	FASTENER	LOCATION
13.	Top plate to top plate, at end joints	8-16d common 12-10d box 12-3"x0.131" nails 12-3" 14 gage staples, 7/16" crown	Each side of end joint, face nail (min 24" lap splice length each side of end joint)
14.	Bottom plate to joist, rim joist, band joist or blocking (not at braced wall panels)	16d common	16" o.c. face nail
		16d box 3"x0.131" nails 3" 14 gage staples, 7/16" crown	12" o.c. face nail
15.	Bottom plate to joist, rim joist, band joist or blocking **at braced wall panels**	2-16d common 3-16d box 4-3"x0.131" nails 4-3" 14 gage staples, 7/16" crown	16" o.c. face nail
16.	Stud to top or bottom plate 4-8d common 4-10d box 4-3"x0.131" nails 4-3" 14 gage staples, 7/16" crown		Toenail
		2-16d common 3-10d box 3-3"x0.131" nails 3-3" 14 gage staples, 7/16" crown	End nail
17.	Top or bottom plate to stud 2-16d common 3-10d box 3-3"x0.131" nails 3-3" 14 gage staples, 7/16" crown		End nail
18.	Top plates, laps at corners and intersections	2-16d common 3-10d box 3- 3"x0.131" nails 3-3" 14 gage staples, 7/16" crown	Face nail
19.	1" brace to each stud and plate	2-8d common 2-10d box 2- 3"x0.131" nails 2- 3" 14 gage staples, 7/16" crown	Face nail
20.	1"x6" sheathing to each bearing	2-8d common 2-10d box	Face nail
21.	1"8" and wider sheathing to each bearing	3-8d common 3-10d box	Face nail
	FLOOR		
22.	Joist to sill, top plate, or girder	3-8d common 3-10d box 3-3"x0.131" nails 3-3" 14 gage staples, 7/16" crown	Toenail
23.	Rim joist, band joist, or blocking to top plate, sill or other framing below	8d common 10d box 3"x0.131" nails 3" 14 gage staples, 7/16" crown	6" o.c., toenail
24.	1"x6" subfloor or less to each joist	2-8d common 2-10d box	Face nail
25.	2" subfloor to joist or girder	2-16d common	Face nail
26.	2" plank	2-16d common	Each bearing, face nail
27.	Built up girders and beams, 2" lumber layers	20d common	32" o.c. face nail at top and bottom staggered on opposite sides
		10d box 3"x0.131" nails 3" 14 gage staples, 7/16" crown	24" o.c. face nail at top and bottom staggered on opposite sides
		And 2-20d common 3-10dbox 3- 3"x0.131" nails 3- 3" 14 gage staples, 7/16" crown	Ends and at each splice, face nail
28.	Ledger strip supporting joists or rafters	3-16d common 4-10d box 4-3"x0.131" nails 4-3" 14 gage staples, 7/16" crown	Each joist or rafter, face nail
29.	Joist to band joist or rim joist	3-16d common 4-10d box 4-3"x0.131" nails 4-3" 14 gage staples, 7/16" crown	End nail
30.	Bridging or blocking to joist, rafter or truss	2-8d common	Each end, toenail
		2-10d box 2-3"x0.131" nails 2-3" 14 gage staples, 7/16" crown	
	WOOD STRUCTURAL PANS, SUB FLOOR, ROOF AND INTERIOR WALL SHEATHING TO FRAMING AND PARTICLEBOARD WALL SHEATHING TO FRAMING (a)		
31.	3/8"-1/2"	6d common or deformed (2"x0.113") (subfloor and wall)	6" edge 12" intermediate supports
		8d box or deformed (roof)	
		2 3/8"x0.113" nail (subfloor and wall)	
		1 ¾" 16 gage staple, 7/16" crown	4" edge 8" intermediate supports
		2 3/8" x0.113" nail (roof)	
		1 ¾"16 gage staple, 7/16" crown (roof)	3" edge 6" intermediate supports
32.	19/32" –3/4"	8d common 6d deformed	6" edge 12" intermediate supports
		2 3/8"x0.113 nail 2" 16" gage staple, 7/16" crown	4" edge 8" intermediate supports
33.	7/8" – 1/4"	10d common 8d deformed	6" edge 12" intermediate supports
	OTHER EXTERIOR WALL SHEATHING		
34.	1/2" fiberboard sheathing(b)	1 ½" galvanized roof nail 1 ¼" 16 gage staple with 7/16" or 1" crown	3" edge 6" intermediate supports
35.	25/32" fiberboard sheathing (b)	1 ¾" galvanized roof nail 1 ½" 16 gage staple with 7/16" or 1" crown	3" edge 6" intermediate supports
	WOOD STRUCTURAL PANELS, COMBINATION SUBFLOOR UNDERLAYMENT TO FRAMING		
36.	¾" and less	8d common 6d deformed	6" edge 12" intermediate supports
37.	7/8"-1"	8d common 8d deformed	6" edge 12" intermediate supports
38.	1 1/8"-1 ¼"	10d common 8d deformed	6" edge 12" intermediate supports
	PANEL SIDING TO FRAMING		
39.	½" or less	6d corrosion-resistant siding 6d corrosion-resistant casing	6" edge 12" intermediate supports
40.	5/8"	8d corrosion-resistant siding 8d corrosion-resistant casing	6" edge 12" intermediate supports
	INTERIOR PANELING		
41.	¼"	4d casing 4d finish	6" edge 12" intermediate supports
42.	3/8"	6d casing 6d finish	6" edge 12" intermediate supports

For SI: 1 inch = 25.4 mm.
a. Nails spaced at 6 inches at intermediate supports where spans are 48" or more. For nailing of wood structural panel and particleboard diaphragms and shear walls, refer to Section 2305.
b. Nails for wall sheathing shall be sufficient to hold the sheathing in place.
c. Spacing shall be 6 inches on center on the edges and 12 inches on center at intermediate supports for nonstructural applications. Panel supports at 16 inches (20 inches if strength axis in the long direction of the panel, unless otherwise marked).

THESE DRAWINGS AND SPECIFICATIONS ARE THE PROPERTY AND COPYRIGHT OF LAUTERBACH & ASSOCIATES. ALL RIGHTS RESERVED, AND SHALL NOT BE USED ON ANY OTHER WORK OR PROJECT EXCEPT BY WRITTEN AGREEMENT WITH LAUTERBACH & ASSOCIATES. WRITTEN DIMENSIONS SHALL TAKE PRECEDENCE OVER SCALED DIMENSIONS AND SHALL BE VERIFIED ON THE JOB SITE. ANY DISCREPANCY SHALL BE BROUGHT TO THE NOTICE OF LAUTERBACH & ASSOCIATES PRIOR TO COMMENCEMENT OF ANY WORK.

LAUTERBACH & ASSOCIATES
ARCHITECTS • INC.
David C. Kesterson, Architect • Ilona Scott, Architect • Mark S. Pettit, Architect
300 MONTGOMERY AVENUE, OXNARD, CALIFORNIA 93036 | 805-988-0912 | FAX 805-981-4510 | www.la-arch.com

REGISTERED PROFESSIONAL ENGINEER SHANE DENNIS JUDD No. M24632 MECHANICAL STATE OF CALIFORNIA

REGISTERED PROFESSIONAL ENGINEER SHANE DENNIS JUDD No. C36991 CIVIL STATE OF CALIFORNIA

CONCORD DRIVE APARTMENTS
2950 & 2956 CONCORD DRIVE
OXNARD, CA, 93036

CITY OF OXNARD HOUSING AUTHORITY
435 S. D STREET
OXNARD, CALIFORNIA 93030

NO	DESCRIPTION	DATE
1	SUBMIT	02-26-2020

ISSUE

JOB NO. 20-190209

DRAWN BY:
CHECKED BY:
PROJECT MANAGER:
PRINT DATE: 2/15/19 8:36:51 AM

GENERAL NOTES

S-1.0

STRUCTURAL GENERAL NOTES (CONTINUED)

2019 CRC DESIGN LOADS

1. (R301 CRC) FLOOR LIVE LOADS:
   UNIFORM FLOOR LOAD: 40 psf
   UNIFORM DECK LOAD: 60 psf
   CONCENTRATED LOAD: 300 lb
   NO LIVE LOAD REDUCTIONS TAKEN

2. (R301 CRC) CEILING LIVE LOADS:
   UNINHABITABLE ATTICS WITHOUT STORAGE: 10 psf
   UNINHABITABLE ATTICS WITH LIMITED STORAGE: 20 psf
   HABITABLE ATTICS: 30 psf

3. (R301 CRC) ROOF LIVE LOAD: 20 psf
   NO LIVE LOAD REDUCTIONS TAKEN

4. (CBC 1609 & ASCE 7–10) WIND DESIGN DATA:
   ULTIMATE WIND SPEED (3–MILE GUST): 110
   NOMINAL WIND SPEED (3–MILE GUST): 38
   WIND EXPOSURE: C
   INTERNAL PRESSURE COEFFICIENT: 0.18

5. (CBC 1613 & ASCE 7–10) EARTHQUAKE DESIGN DATA:
   SEISMIC IMPORTANCE FACTOR I: 1.0
   RISK CATEGORY: II
   SPECTRAL RESPONSE ACCELERATIONS: Ss=1.947 S1=0.686
   SITE CLASS: D
   SPECTRAL RESPONSE COEFFICIENTS: Sds=1.298 Sd1=0.686
   SEISMIC DESIGN CATEGORY: D
   SEISMIC–FORCE RESISTING SYSTEM: WOOD SHEAR WALLS, ORDINARY REINFORCED CONCRETE S.W., CANTILEVER COLUMNS
   DESIGN BASE SHEAR: V=0.185W, V=0.301W, V=0.964W
   SEISMIC RESPONSE COEFFICIENT: Cs=0.200, Cs=0.325, Cs=1.038
   RESPONSE MODIFICATIONS FACTOR: R=6.5, R=4.0, R=1.25
   REDUNDANCY FACTOR: p=1.3 (12.3.4.2 ASCE)
   ANALYSIS PROCEDURE USED: EQUIVALENT LATERAL FORCE

CONTRACTOR RESPONSIBILITY

1. EACH CONTRACTOR RESPONSIBLE FOR THE CONSTRUCTION OF A MAIN WIND OR SEISMIC FORCE RESISTING SYSTEM, DESIGNATED SEISMIC SYSTEM OR A WIND OR SEISMIC RESISTING COMPONENT LISTED IN THE STATEMENT OF SPECIAL INSPECTIONS SHALL SUBMIT A WRITTEN STATEMENT OF RESPONSIBILITY TO THE BUILDING OFFICIAL AND THE OWNER PRIOR TO THE COMMENCEMENT OF WORK ON THE SYSTEM OR COMPONENT. THE CONTRACTOR'S STATEMENT OF RESPONSIBILITY SHALL CONTAIN THE FOLLOWING:
   (1) ACKNOWLEDGEMENT OF AWARENESS OF THE SPECIAL REQUIREMENTS CONTAINED IN THE STATEMENT OF SPECIAL INSPECTIONS
   (2) ACKNOWLEDGEMENT THAT CONTROL WILL BE EXERCISED TO OBTAIN CONFORMANCE WITH THE CONSTRUCTION DOCUMENTS APPROVED BY THE BUILDING OFFICIAL
   (3) PROCEDURES FOR EXERCISING CONTROL WITHIN THE CONTRACTOR'S ORGANIZATION, THE METHOD OF FREQUENCY OF REPORTING AND THE DISTRIBUTION OF THE REPORTS
   (4) IDENTIFICATION AND QUALIFICATION OF THE PERSON(S) EXERCISING SUCH CONTROL AND THEIR POSITION(S) IN THE ORGANIZATION

2. BY BEGINNING CONSTRUCTION ON THIS BUILDING, THE CONTRACTOR AGREES HE HAS THOROUGHLY REVIEWED THESE PLANS AND BELIEVES HE CAN BUILD THIS STRUCTURE AS THE PLANS ARE DRAWN AND DETAILED

ABBREVIATIONS

ABBR.	CORRECT SPELLING
A.B.	ANCHOR BOLT
B., BOT.	BOTTOM
B.O.B.	BOTTOM OF BEAM
B.N.	BOUNDARY NAILING
BLK'G	BLOCKING
C.J.	CEILING JOIST
CMU	CONCRETE MASONRY UNIT
CONC.	CONCRETE
CONT.	CONTINUOUS
D.	DEEP
D.F.	DOUGLAS FIR
DBL.	DOUBLE
DIA.	DIAMETER
EA.	EACH
E.N.	EDGE NAILING
E.W.	EACH WAY
F.J.	FLOOR JOIST
FT.	FEET
GLB	GLU–LAM BEAM
HOR., HORIZ.	HORIZONTAL
IN.	INCH
K.P.	KING POST
LT. WT.	LIGHT WEIGHT
M.B.	MACHINE BOLT
M.L.	MICROLLAM
MAX.	MAXIMUM
MIN.	MINIMUM
O.C.	ON CENTER
O/	OVER
P.C.	PIPE COLUMN
P.L.	PARALLAM
P.T.	POST–TENSION
PSR	PLYWOOD SPAN RATING
R.R.	ROOF RAFTER
SD.	SIDE
S.N.	SILL NAILING
SEL. STR.	SELECT STRUCTURAL
SIM.	SIMILAR
STAG.	STAGGERED
STD.	STANDARD
STL.	STEEL
T.	TOP
THK.	THICK
TJI	TRUS JOIST OR EQUIVALENT
TPL.	TRIPLE
TRIM	TRIMMER
TYP.	TYPICAL
U.N.O.	UNLESS NOTED OTHERWISE
U.W.A.	UNDER WALL ABOVE
VERT.	VERTICAL
W.	WIDE
W/	WITH

STRUCTURAL OBSERVATIONS

1. THE OWNER SHALL EMPLOY THE ENGINEER REGISTERED IN THE STATE OF CALIFORNIA WHO IS RESPONSIBLE FOR THE STRUCTURAL DESIGN TO DO STRUCTURAL OBSERVATION. 72 HOURS NOTICE IS REQUIRED FOR MEETINGS AND OBSERVATIONS.

2. NAME AND NUMBER OF ENGINEER RESPONSIBLE FOR THE STRUCTURAL DESIGN:
   SHANE JUDD #C70991

3. NAME AND NUMBER OF THE ENGINEERS THAT MAY BE DESIGNATED TO DO THE STRUCTURAL OBSERVATION:
   SHANE JUDD #C70991

4. THE ENGINEER RESPONSIBLE FOR THE STRUCTURAL OBSERVATION, THE CONTRACTOR, AND APPROPRIATE SUBCONTRACTORS SHALL HOLD A PRE–CONSTRUCTION MEETING TO REVIEW THE DETAILS OF THE STRUCTURAL SYSTEM TO BE STRUCTURALLY OBSERVED.

5. AT THE CONCLUSION OF THE WORK INCLUDED IN THE PERMIT, THE STRUCTURAL OBSERVER SHALL SUBMIT TO THE BUILDING OFFICIAL A WRITTEN STATEMENT THAT THE SITE VISITS HAVE BEEN MADE AND IDENTIFY ANY REPORTED DEFICIENCIES THAT, TO THE BEST OF THE STRUCTURAL OBSERVER'S KNOWLEDGE, HAVE NOT BEEN RESOLVED.

6. THE FOLLOWING ITEMS ARE TO BE OBSERVED BY THE ENGINEER DURING STRUCTURAL OBSERVATION:

   FOUNDATION:
   a) FOOTING REINFORCEMENT PLACEMENT
   b) SLAB REINFORCEMENT LAYOUT AND SPACING
   c) SHRINKAGE REINFORCEMENT

   ROOF NAILING:
   a) RAFTER AND PLYWOOD INSTALLATION
   b) ROOF DIAPHRAGM NAILING
   c) SHEAR TRANSFER FROM ROOF TO WALLS
   d) FRAMING SUPPORTING ROOF

   EXTERIOR FRAMING PRIOR TO PREWRAP:
   a) UPPER FLOOR SHEAR WALL NAILING AND HOLDOWNS
   b) LOWER FLOOR SHEAR WALL NAILING, AND HOLDOWNS AND ANCHOR BOLTS
   c) FLOOR TO FLOOR SHEAR TRANSFER

   SEISMIC/WIND FORCE RESISTING SYSTEM:
   WOOD:
   a) DIAPHRAGMS AND SHEAR WALLS WHERE THE NAILING IS 4"O.C. OR LESS
   b) DRAG CONNECTIONS, DIAPHRAGM CHORDS
   c) BEAMS & PLATES SUPPORTING HOLD–DOWNS & UPLIFT CONNECTORS

   FINAL OBSERVATION:
   a) FLOOR DRAG NAILING
   b) ALL STRUCTURAL DETAILS

7. ENGINEER OF RECORD OR THE DESIGNATED ENGINEER SHALL SUBMIT REPORTS ON THE PRESCRIBED FORM BY THE COUNTY

CONCRETE MASONRY NOTES

MATERIALS:
1. CONCRETE BLOCKS: CONFORMS TO ASTM C90.44 NORMAL WEIGHT
2. REINFORCEMENT: CONFORMS TO ASTM A615, MINIMUM 60 GRADE
3. CONCRETE: MIN. COMPRESSIVE STRENGTH SHALL BE 2500 PSI AT 28 DAYS FOR FOOTINGS AND 3000 PSI AT 28 DAYS FOR STEM WALLS

GENERAL SPECIFICATIONS:
1. CONTRACTOR SHALL VERIFY ALL DIMENSIONS AND CONDITIONS ON THE JOB. THE CONTRACTOR SHALL BE RESPONSIBLE FOR THE TEMPORARY SUPPORT OF ANY VERTICAL EARTH CUTS OVER 4'–0" IN HEIGHT.
2. ALL CELLS BELOW BACKFILL AND ALL OTHER CELLS WHICH CONTAIN REINFORCEMENT TO BE FILLED WITH GROUT AND CONSOLIDATED. U.N.O.
3. MORTAR SHALL BE TYPE S CONSISTING OF PORTLAND CEMENT, HYDRATED LIME, SAND AND POTABLE WATER WITH NO SUBSTITUTIONS. 2000 PSI MIN. SEE BELOW FOR MIN. MIX
4. REINFORCEMENT TO BE SPLICED 48 DIAMETERS MIN AND NO LESS THAN 24".
5. REINFORCEMENT SHALL BE ACCURATELY PLACED AND SECURED SO THAT IT WILL NOT BE DISPLACED. ALL CONCRETE SHALL BE PROPERLY CONSOLIDATED DURING PLACEMENT. ALL REINFORCING STEEL AND EMBEDDED ITEMS SHALL BE SECURELY TIED IN PLACE TO PREVENT DISPLACEMENT DURING GROUT PLACEMENT.
6. GROUT SHALL BE CONSOLIDATED TO INSURE A GOOD CONTACT WITH REINFORCEMENT AND TO ELIMINATE ROCK POCKETS AND VOIDS. THE CONTRACTOR SHALL TAKE ADEQUATE PRECAUTIONS FOR MIXING, PLACING, FINISHING, CURING AND PROTECTING CONCRETE DURING UNFAVORABLE WEATHER CONDITIONS.
7. POURING LIFTS SHALL BE 6'–0" MAX WITH CLEANOUTS PROVIDED FOR POURS OVER 5'–0".
8. POUR ALL FOOTINGS AGAINST SOLID NATURAL UNDISTURBED EARTH OR COMPACTED FILL COMPACTED TO 90% RELATIVE DENSITY.
9. USE 4" DIAMETER PERFORATED PVC DRAIN. PVC PIPE MUST DRAIN TO DOWN SLOPE AND BE NO LONGER THAN 40' WITHOUT SPECIAL DESIGN.
10. BACKFILL WITH 6" WIDTH OF SAND OR CLEAN COARSE GRAVEL AND COVER WITH A 12" THICK COMPACTED FILL BLANKET AT THE SURFACE. BACKFILL SHALL NOT BE PLACED UNTIL 14 DAYS AFTER GROUTING.
11. ALL WALLS SHALL BE WATERPROOFED ON THE SOIL SIDE BELOW FINISH GR.
12. CONCRETE BLOCK UNITS TO BE STAGGERED (RUNNING BOND).
13. CONCRETE BLOCK UNITS TO BE STANDARD 8"X8"X16" UNITS CONFORMING TO ASTM C90, GRADE N, TYPE II MIN. AND UBC STANDARD 21–4 UNO.
14. ALL FOOTINGS TO BE 12" MIN. INTO NATURAL GROUND.
15. IF 2500 PSI CONCRETE MIX IS SITE MIXED, USE 1 PART PORTLAND CEMENT, 2 PARTS SAND, 3 PARTS 1" ROCK W/A MAXIMUM OF 7 GALLONS OF WATER PER SACK OF CEMENT.
16. GROUT MIX FOR CONCRETE BLOCK WALL TO BE 2000 PSI, 1 PART PORTLAND CEMENT TO 3 PARTS SAND TO WHICH MAY BE ADDED NOT MORE THAN 1/10 PART LIME. SUFFICIENT WATER TO BE ADDED TO PRODUCE CONSISTENCY FOR POURING WITHOUT SEGREGATION OF THE CONSTITUENTS. GROUT MAY CONTAIN PEA GRAVEL TO A MAX. SIZE OF 3/8".
17. MORTAR MIX FOR CONCRETE BLOCKS TO BE 1 PART CEMENT TO 1/4 HYDRATED LIME TO 3 1/2 PARTS DAMP LOOSE SAND.

SPECIAL INSPECTIONS

1. THE OWNER OR REGISTERED DESIGN PROFESSIONAL IN RESPONSIBLE CHARGE ACTING AS THE OWNERS AGENT SHALL EMPLOY ONE OR MORE SPECIAL INSPECTORS DURING CONSTRUCTION ON THE TYPES OF WORK LISTED UNDER SECTION 1705 OF THE 2019 CBC. THE SPECIAL INSPECTOR SHALL BE A QUALIFIED PERSON WHO SHALL DEMONSTRATE COMPETENCE, TO THE SATISFACTION OF THE BUILDING OFFICIAL, FOR INSPECTION OF THE PARTICULAR TYPE OF CONSTRUCTION OR OPERATION REQUIRING SPECIAL INSPECTION.

2. SPECIAL INSPECTORS SHALL KEEP RECORDS OF INSPECTIONS. THE SPECIAL INSPECTOR SHALL FURNISH INSPECTION REPORTS TO THE BUILDING OFFICIAL, AND TO THE REGISTERED DESIGN PROFESSIONAL IN RESPONSIBLE CHARGE. REPORTS SHALL INDICATE THAT THE WORK INSPECTED WAS DONE IN CONFORMANCE TO APPROVED CONSTRUCTION DOCUMENTS. DISCREPANCIES SHALL BE BROUGH TO THE IMMEDIATE ATTENTION OF THE CONTRACTOR FOR CORRECTION. IF THE DISCREPANCIES ARE NOT CORRECTED, THE DISCREPANCIES SHALL BE BROUGHT TO THE ATTENTION OF THE BUILDING OFFICIAL AND TO THE REGISTERED DESIGN PROFESSIONAL IN RESPONSIBLE CHARGE PRIOR TO THE COMPLETION OF THAT PHASE OF WORK. A FINAL REPORT DOCUMENTING REQUIRED SPECIAL INSPECTION AND CORRECTION OF ANY DISCREPANCIES NOTED IN THE INSPECTIONS SHALL BE SUBMITTED AT A POINT IN TIME AGREED UPON BY THE PERMIT APPLICANT AND THE BUILDING OFFICIAL PRIOR TO START OF WORK.

3. THE FOLLOWING ITEMS REQUIRE SPECIAL INSPECTION:

   THE WIND AND SEISMIC FORCE RESISTING SYSTEMS ARE TO BE INSPECTED/ OBSERVED BY THE ENGINEER OF RECORD (SEE STRUCT OBSERVATIONS)

   STEEL CONSTRUCTION AND FIELD WELDING (SEE TABLE 1705.21 & 1705.12.1)
   PIER FOUNDATIONS (SEE TABLE 1705.8)
   PILE FOUNDATIONS (SEE TABLE 1705.8)
   EPOXY USED FOR ANCHOR BOLTS, HOLDOWNS, AND STRUCTURAL RETROFITS
   CONCRETE CONSTRUCTION (SEE TABLE 1705.3)
   SOILS (SEE TABLE 1705.4)
   ANCHORAGE OF ELECTRICAL EQUIPMENT IN SDC E AND F
   MASONRY CONSTRUCTION (SEE TABLE 1705.4)
   CONCRETE WHERE Fc' EXCEEDS 2500 psi
   POST–INTALLED ANCHORS (SEE TABLE 1705.1.1)
   DIAPHRAGMS AND SHEAR WALLS WHERE THE NAILING IS 4"O.C. OR LESS
   EXTERIOR WALL PANELS AND THEIR ANCHORAGE
   SUSPENDED CEILINGS AND THEIR ANCHORAGE
   ACCESS FLOORS AND THEIR ANCHORAGE
   STEEL STORAGE RACKS 8 ft OR GREATER AND THEIR ANCHORAGE

   SPECIAL CASES (WHEN ORDERED BY THE BUILDING OFFICIALS)

4. SEE THE ADJACENT STATEMENTS OF SPECIAL INSPECTIONS FOR SPECIFIC REQUIREMENTS OF EACH TYPE OF SPECIAL INSPECTION

STATEMENT OF SPECIAL INSPECTIONS

TABLE 1705.3
REQUIRED VERIFICATION AND INSPECTION OF CONCRETE CONSTRUCTION

VERIFICATION AND INSPECTION	CONTINUOUS	PERIODIC	REFERENCED STANDARDa	IBC REFERENCE
1. Inspection of reinforcing steel, including prestressing tendons, and placement.	—	X	ACI 318: 3.5, 7.1-7.7	1910.4
2. Inspection of reinforcing steel welding in accordance with Table 1705.2.2, Item 2b.	—	—	AWS D1.4 ACI 318: 3.5.2	—
3. Inspection of anchors cast in concrete where allowable loads have been increased or where strength design is used.	—	X	ACI 318: D.9.2	1908.5
4. Inspection of anchors post-installed in hardened concrete membersb a. Adhesive anchors installed in horizontally or upwardly inclined orientations to resist sustained tension loads.	X		ACI 318:D.9.2.4	—
b. Mechanical anchors and adhesive anchors not defined in 4.a.		X	ACI 318: D.9.2	—
5. Verifying use of required design mix.	—	X	ACI 318: Ch. 4, 5.2-5.4	1904.2, 1910.2, 1910.3
6. At the time fresh concrete is sampled to fabricate specimens for strength tests, perform slump and air content tests, and determine the temperature of the concrete.	X		ASTM C 172 ASTM C 31 ACI 318: 5.6, 5.8	1910.10
7. Inspection of concrete and shotcrete placement for proper application techniques.	X	—	ACI 318: 5.9, 5.10	1910.6, 1910.7, 1910.8
8. Inspection for maintenance of specified curing temperature and techniques.	—	X	ACI 318: 5.11-5.13	1910.9
9. Inspection of prestressed concrete: a. Application of prestressing forces. b. Grouting of bonded prestressing tendons in the seismic force-resisting system.	X X	—	ACI 318: 18.20 ACI 318: 18.18.4	—
10. Erection of precast concrete members.	—	X	ACI 318: Ch. 16	—
11. Verification of in-situ concrete strength, prior to stressing of tendons in post-tensioned concrete and prior to removal of shores and forms from beams and structural slabs.	—	X	ACI 318: 6.2	—
12. Inspect formwork for shape, location and dimensions of the concrete member being formed.	—	X	ACI 318: 6.1.1	—

For SI: 1 inch = 25.4 mm.
a. Where applicable, see also Section 1705.11, Special inspections for seismic resistance.
b. Specific requirements for special inspection shall be included in the research report for the anchor issued by an approved source in accordance with ACI 355.2, D.9.2 in ACI 318, or other qualification procedures. Where specific requirements are not provided, special inspection requirements shall be specified by the registered design professional and shall be approved by the building official prior to the commencement of the work.

TABLE 1705.2.2
REQUIRED VERIFICATION AND INSPECTION OF STEEL CONSTRUCTION OTHER THAN STRUCTURAL STEEL

VERIFICATION AND INSPECTION	CONTINUOUS	PERIODIC	REFERENCED STANDARDa
1. Material verification of cold-formed steel deck:			
a. Identification markings to conform to ASTM standards specified in the approved construction documents.	—	X	Applicable ASTM material standards
b. Manufacturer's certified test reports.	—	X	
2. Inspection of welding:			
a. Cold-formed steel deck:			
1) Floor and roof deck welds.	—	X	AWS D1.3
b. Reinforcing steel:			
1)Verification of weldability of reinforcing steel other than ASTM A 706.	—		AWS D1.4 ACI 318: Section 3.5.2
2) Reinforcing steel resisting flexural and axial forces in intermediate and special moment frames, and boundary elements of special structural walls of concrete and shear reinforcement.	X	—	
3) Shear reinforcement.	X	—	
4) Other reinforcing steel.	—		

For SI: 1 inch = 25.4 mm.

STATEMENT OF SPECIAL INSPECTIONS (CONTINUED)

Table 8-a Location and Frequencies of bolting inspections

Inspection Tasks Prior to Bolting	QC Task	QC Doc.	QA Task	QA Doc.
Proper bolt selected for the joint detail	O	-	O	-
Proper bolting procedure selected for joint detail	O	-	O	-
Connecting elements are fabricated properly, including the appropriate faying surface condition and hole preparation, if specified, meets appliable requirements	O	-	O	-
Pre-installation verification testing conducted for fastener assemblies and method used.	P	D	O	D
Proper storage provided for bolts, nuts, washers, and other fastener components.	O	-	O	-
Inspection Tasks During Bolting	**QC Task**	**QC Doc.**	**QA Task**	**QA Doc.**
Fastener assemblies placed in all holes and washers (if required) are properly positioned	O	-	O	-
Joint bought to a snug tight condition prior to pretensioning operation	O	-	O	-
Fastener component not turned by the wrench prevented from rotating	O	-	O	-
Bolts are pretensioned progressing systematically from most rigid point toward free edges	O	-	O	-
Inspection Tasks After Bolting	**QC Task**	**QC Doc.**	**QA Task**	**QA Doc.**
Document accepted and rejected connections	P	D	P	D

Table 8-b Location and Frequencies of welding inspections

Visual Inspection Tasks Before Welding	QC Task	QC Doc.	QA Task	QA Doc.
Material Identification (Type/Grade)	O	-	O	-
Welder identification system	O	-	O	-
Fit-up of Grove Welds (including joint geometry) - Joint preparation - Dimensions (alignment, root opening, root face, bevel) - Cleanliness (condition of steel surface) - Tacking (tack weld quality and location) - Backing type and fit (if applicable)	P/O**	-	O	-
Configuration and finish of access holes	O	-	O	-
Fit-up of fillet welds - Dimensions (alignment, gaps at root) - Cleanliness (condition of steel surfaces) - Tacking (tack weld quality and location)	P/O**		O	

** Following performance of this inspection task for ten welds to be made by a given welder, with the welder demonstrating adequate understanding of the requirements and possession of skills and tools to verify these items, the Perform designation of this task shall be reduced to Oberve, and the welder shall perform this task. Should the inspector determine that the welder has discontinued adequate performance of this task, the task shall be returned Perform until such time as the inspector has reestablished adequate assurance that the welder will perform the inspection tasks listed.

Visual Inspection Tasks During Welding	QC Task	QC Doc.	QA Task	QA Doc.
WPS followed - Settings on welding equipment - Travel Speed - Selected welding materials - Shielding gas type/flow rate - Preheat applied - Interpass temperature manitained (min./max.) - Proper position (F,V,H,OH) - Intermix of filler metals avoided unless approved	O	-	O	-
Use of qualified welders	O	-	O	-
Control and handling of welding consumables - Packaging - Exposure control	O	-	O	-
Envirnoment conditions - Wind speed within limits - Precipitation and temperature	O	-	O	-
Welding techniques - Interpass and final cleaning - Each pass within profile limitations - Each pass meets quality requirements	O		O	
No welding over cracked tacks	O	-	O	-
Visual Inspection Tasks After Welding	**QC Task**	**QC Doc.**	**QA Task**	**QA Doc.**
Welds cleaned	O	-	O	-
Verify size, length, and location of welds	P	-	P	-
Visually inspect welds to acceptance criteria - Crack prohibition - Weld/base-metal fusion - Crater cross-section - Weld profiles - Weld size - Undercut - Porosity	P	D	P	D
Placement of reinforcing or contouring fillet welds (if required)	P	D	P	D
Backing removed, weld tabs removed and finished, and fillet welds added (if required)	P	D	P	D
Repair activities	P	-	P	D

Table 8-c Location and Frequencies of other inspections

Other Inspection Task	QC Task	QC Doc.	QA Task	QA Doc.
Reduced beam section (RBS) requirements, if appliable - contour and finish - dimensional tolerances	P	D	P	D
Protected zone - no holes and unapproved attachments made by fabricator or erector, as applicable	P	D	P	D

The following entries are used in the tables:
- Observe (O) - The inspector shall observe these functions on a random, daily basis. Welding operations need not be delayed pending observations.
- Perform (P) - These inspections shall be performed prior to the final acceptance of the item. Where a task is noted to be performed by both OC and OA, it shall be permitted to coordinate the inspection function between QC and QA so that the inspection functions need be performed by only one party. Where QA is to rely upon inspection functions performed by QC, the approval of the engineer of record and the authority having jurisdiction is required.
- Document (D) - The inspector shall prepare reports indicating that the work has been performed in accordance with the contract documents. The report need not provide detailed measurements for joint fit-up, WPS settings, completed welds, or other individual items listed in the Tables of 8-a, 8-b, 8-c. For shop fabrication, the report shall indicate the piece mark of the piece inspected. For field work, the report shall indicate the reference gride lines and floor or elevation inspected. Work not in compliance with the contract documents and wether the noncompliance has been satisfactorilly repaired shall be noted in the inspection report.

TABLE 1705.6
REQUIRED VERIFICATION AND INSPECTION OF SOILS

VERIFICATION AND INSPECTION	CONT.	PER.
1. Verify materials below shallow foundations are adequate to achieve the design bearing capacity.		X
2. Verify excavations are extended to proper depth and have reached proper material.		X
3. Perform classification and testing of compacted fill materials.		X
4. Verify use of proper materials, densities and lift thicknesses during placement and compaction of controlled fill.	X	
5. Prior to placement of controlled fill, inspect subgrade and verify that site has been prepared properly.		X

STRUCTURAL TESTING FOR SEISMIC RESISTANCE

1. (1708.4 CBC) BASE METAL THICKER THAN 1.5 INCHES, WHERE SUBJECT TO THROUGH–THICKNESS WELD SHRINKAGE STRAINS, SHALL BE ULTRASONICALLY TESTED FOR DISCONTINUITIES BEHIND AND ADJACENT TO SUCH WELDS AFTER JOINT COMPLETION

STEEL NOTES

1. THE LABOR, MATERIALS & EXECUTION REQUIRED FOR ALL STEEL WORK AS INDICATED ON DRAWINGS SHALL BE IN ACCORDANCE WITH THOSE APPLICABLE SECTIONS OF CHAPTER 22 OF THE 2019 C.B.C.
2. STRUCTURAL STEEL & MISCELLANEOUS STEEL SHALL CONFORM TO A.S.T.M. A–36. PIPE COLUMNS SHALL CONFORM TO A.S.T.M. A–53 GRADE "B". BOLTS SHALL CONFORM TO A.S.T.M. SPECIFICATION A–307 FOR WOOD & A–325x FOR CONCRETE AND STEEL.
3. ALL WELDS SHALL BE DONE IN AN APPROVED SHOP IN ACCORDANCE WITH AWS D1.1–94. ALL FIELD WELDING SHALL BE PERFORMED BY A CERTIFIED WELDER & BE CONTINUOUSLY INSPECTED BY AN APPROVED DEPUTY INSPECTOR.
4. WELDING SHALL BE DONE BY ELECTRIC SHIELDED ARC PROCESS USING E–70XX ELECTRODES.
5. STRUCTURAL STEEL NOT ENCASED IN CONCRETE SHALL BE PAINTED WITH ONE COAT OF RED OXIDE PRIMER.
6. Wx SECTIONS OF STRUCTURAL STEEL FOR MOMENT FRAMES SHALL CONFORM WITH ASTM A–992.

STRUCTURAL OBSERVATION PROGRAM
AND DESIGNATION OF THE
STRUCTURAL OBSERVER

PROJECT ADDRESS: 2228 CAREFUL AVE. AGOURA HILLS PERMIT APPL. NO.:

Description of Work: RESIDENCE

Owner: MR.GENCHI & MS.ARMIJO Architect: CLEARLIGHT ARCH. Engineer: SHANE JUDD

STRUCTURAL OBSERVATION
(only checked items are required)

Firm or Individual to be responsible for the Structural Observation:
Name: ALL–TRADE Phone: 805–552–4000 Calif. Registration: C70991

FOUNDATION	WALL	FRAME	DIAPHRAGM
☐ Footing, Stem Walls, Piers	☐ Concrete	☐ Steel Moment Frame	☐ Concrete
☐ Mat Foundation	☐ Masonry	☐ Steel Braced Frame	☐ Masonry
☐ Caisson, Piles, Grade Beams	☐ Wood	☐ Concrete Moment Frame	☐ Wood
☐ Stepping/Retaining Foundation, Hillside Special Anchors	☐ Others:	☐ Masonry Wall Frame	☐ Others:
☐ Concrete Slab		☐ Others: CANT. COL.	

DECLARATION BY OWNER
I, the Owner of the project, declare that the above listed form or individual is hired BY ME to be the Structural Observer.

Signature Date

DECLARATION BY ARCHITECT OR ENGINEER OF RECORD (required if the Structural Observer is different from the Architect or Engineer of Record)

I, the Architect or Engineer of record for the project, declare that the above listed firm or individual is designated by me to be responsible for the Structural Observation.

Signature C70991 License No. 4/7/2020 Date

SI/Form.08 (Part 2) (Rev. 6/1/2005) www.ladbs.org

THESE DRAWINGS AND SPECIFICATIONS ARE THE PROPERTY AND COPYRIGHT OF LAUTERBACH & ASSOCIATES, ALL RIGHTS RESERVED, AND SHALL NOT BE USED ON ANY OTHER WORK OR PROJECT EXCEPT BY WRITTEN AGREEMENT WITH LAUTERBACH & ASSOCIATES. WRITTEN DIMENSIONS SHALL TAKE PRECEDENCE OVER SCALED DIMENSIONS AND SHALL BE VERIFIED ON THE JOB SITE, ANY DISCREPANCY SHALL BE BROUGHT TO THE NOTICE OF LAUTERBACH & ASSOCIATES PRIOR TO COMMENCEMENT OF ANY WORK.

LAUTERBACH & ASSOCIATES
A R C H I T E C T S • I N C.
David C. Kesterson, Architect • Ilona Scott, Architect • Mark S. Pettit, Architect
300 MONTGOMERY AVENUE, OXNARD, CALIFORNIA 93036 | 805-988-0912 | FAX 805-981-4510 | www.la-arch.com

REGISTERED PROFESSIONAL ENGINEER SHANE DENNIS JUDD No. M34632 MECHANICAL STATE OF CALIFORNIA

REGISTERED PROFESSIONAL ENGINEER SHANE DENNIS JUDD No. C70991 CIVIL STATE OF CALIFORNIA

CONCORD DRIVE APARTMENTS
2950 & 2956 CONCORD DRIVE
OXNARD, CA, 93036

CITY OF OXNARD HOUSING AUTHORITY
435 S. D STREET
OXNARD, CALIFORNIA 93030

NO	DESCRIPTION	DATE
1	SUBMIT	02-26-2020

ISSUE

JOB NO. 20-190209

DRAWN BY:
CHECKED BY:
PROJECT MANAGER:
PRINT DATE: 2/15/19 8:36:51 AM

GENERAL NOTES (CONT'D)

S-1.1

12"W X 12"D TIE FOOTING W/ (2)-#4 BARS T&B

(E) 12" X 24" FOOTING TO REMAIN V.I.F.

(N) 12" X 24" FOOTING W/ (2)-#4 BARS T&B

4X6 POST UNO

6X6 POST UNO

POST ABOVE

BEAM # IN CALCULATIONS

BEARING WALLS

NON-BEARING WALLS

BEARING WALLS ABOVE

8 / S-3.0 CALIFORNIA FRAMING

1. FOR TYPICAL CUTTING, NOTCHING, AND BORING SEE 1/S-3.0
2. FOR TYPICAL OPENING IN SHEAR PANELS SEE 9/S-3.0
3. FOR TYPICAL HOLD-DOWN STRAP AT UPPER FLOOR SEE 7/S-3.0
4. FOR TYPICAL TOP PLATE SPLICE SEE 2 THRU 6/S-3.0,
5. PROVIDE DBL 2x TRIMMER AT EACH END OF EACH HDR/BEAM UNO
6. SHEATHE ENTIRE EXTERIOR WITH 'B' SHEAR WALL MIN. UNO
7. ALL EXT. BEARING WALLS 2X6 @ 16" O.C. & INT. BEARING WALLS 2X6 @ 16" O.C. UNO
8. PROVIDE MIN. 1/4" GAP BETWEEN TOP PL AND BEAMS @ ALL NON-BEARING WALLS U.N.O
9. ALL STRAPS (MST W/ (2)-2X MIN., MSTI W/ TJI, ETC) BY SIMPSON STRONG-TIE MEET LARR #25713 AND ICC ESR #2105
10. ALL ANGLES (A35, LTP4, ETC) BY SIMPSON STRONG-TIE MEET LARR #25716 AND ICC ESR #3096
11. ALIGN RR OR FJ WITH DRAG STRAPS WHERE SPECIFIED. PROVIDE EDGE NAILING ALONG ENTIRE RR OR FJ
12. ALL 'Q' FASTENERS IMPLY SDS2.5 SCREWS TO BE USED
14. EPOXY USING SIMPSON SET-XP (ICC ESR #2508 AND LARR#25744)
15. A COPY OF THE LOS ANGELES REPORT AND/OR CONDITIONS OF LISTING SHALL BE MADE AVAILABLE AT THE JOB SITE

Diaphragm and Shear Wall Notes

1. Roof diaphragm nailing to be inspected before covering. Face grain of plywood shall be perpendicular to supports. Floor shall have tongue and groove or blocked panel edges. Plywood spans shall conform with Table 2304.8(1)
2. All diaphragm and shear wall nailing shall utilize common nails or galvanized box.

SHEAR WALL SCHEDULE [6]

(DOUBLE LETTER INDICATES TWO SIDED APPLICATION W/ 3/4" dia. A.B. @ 12" O.C. & A35 OR LTP4 @ 6" O.C.)

MARK	W.S.P [3]	EDGE NAILING [4]	ANCHOR BOLTS [5]	SILL NAILING @ UPPER FLOORS	ALLOWABLE SHEAR (plf) [6]	A35 OR LTP4 SPACING (MIN.)
A	15/32"	8d @ 6" o.c.	5/8" dia. @ 32" o.c.	16d @ 6" o.c.	200	32" O.C.
B	15/32"	10d @ 6" o.c.	5/8" dia. @ 24" o.c.	16d @ 4" o.c.	255	24" O.C.
C [1]	15/32"	10d @ 4" o.c.	5/8" dia. @ 16" o.c.	SDS 1/4"x6"@6"o.c. [2]	383	16" O.C.
D [1]	15/32"	10d @ 3" o.c.	5/8" dia. @ 16" o.c.	SDS 1/4"x6"@6"o.c. [2]	499	12" O.C.
E [1]	15/32"	10d @ 2" o.c.	5/8" dia. @ 16" o.c.	SDS 1/4"x6"@4"o.c. [2]	653	8" O.C.
#	EXISTING SHEAR WALL SHEATHING, NAILING AND HOLD DOWNS TO REMAIN U.N.O.					

1. 3x boundary & edge studs required. 3x pressure treated sill plate required against concrete. (For walls CC, DD, & EE, 3x sill plate required at upper floors.)
2. Simpson SDS 1/4"X6" screws staggered into 4x minimum.
3. Wood Structural Panel applied over studs spaced at 16" o.c. Use 5-ply STRUCT I plywood, PS1-09 or STRUCT I OSB, PS2-10.
4. Nailing at intermediate members to be spaced @ 12" O.C. Only common nails shall be used. (10d-0.148" dia., 8d-0.131" dia.) Nail guns using "clipped head" or "sinker" nails are not acceptable. Stagger nailing in top plates, boundary members, and edge members. Edge distance for nailing at 3x boundary and panel edges shall be 1/2" minimum.
5. Use 12" min. long anchor bolts extending 4-1/2" out of concrete min.
6. Based on 2016 chapter 23 of the CBC (reduced 25%)

HOLDOWN NOTES

1. All bolt holes shall be 1/8" (maximum) over-size at the connection of holdowns to posts. Inspectors to verify.
2. Holdown connection bolts/nuts shall be torqued 1/2 turn beyond finger tight or as required by manufacturer. Inspector shall verify by random inspection prior to covering walls.
3. Approved plate washers in lieu of cut washers to be used for plywood shear wall sill plate anchor bolts and for holdown connector bolts at shear walls.

MINIMUM SIZE FOR SQUARE PLATE WASHERS

BOLT SIZE	PLATE SIZE
5/8"	3"X3"X.229"
3/4"	3"X3"X.229"

FOUNDATION PAD SCHEDULE

PAD	SIZE	THK.	REBAR
A	2'-6"x2'-6"	x12"	4-#4 E.W.
B	3'-6"x3'-6"	x15"	4-#5 E.W.
C	4'-6"x4'-6"	x18"	6-#5 E.W.
D	5'-6"x5'-6"	x21"	6-#6 E.W.

(E) F.J. TO REMAIN U.N.O.

2X8 R.R. @ 16" O.C. U.N.O.

2X6 C.J. @ 16" O.C. U.N.O.

FLOOR SHEATHING

23/32" T&G STURD-1-FLOOR @ TILE PSR. 48/24

Nailing:

BOUNDARY	10 d @ 6 in. o.c.
EDGE	10 d @ 6 in. o.c.
FIELD	10 d @ 12 in. o.c.

1-1/8" T&G STURD-1-FLOOR U.N.O. PSR. 60/48

Nailing:

BOUNDARY	12 d @ 6 in. o.c.
EDGE	12 d @ 6 in. o.c.
FIELD	12 d @ 12 in. o.c.

ROOF SHEATHING

19/32" CDX PLYWOOD OR OSB PSR. 40/20

Nailing:

BOUNDARY	10 d @ 6 in. o.c.
EDGE	10 d @ 6 in. o.c.
FIELD	10 d @ 12 in. o.c.

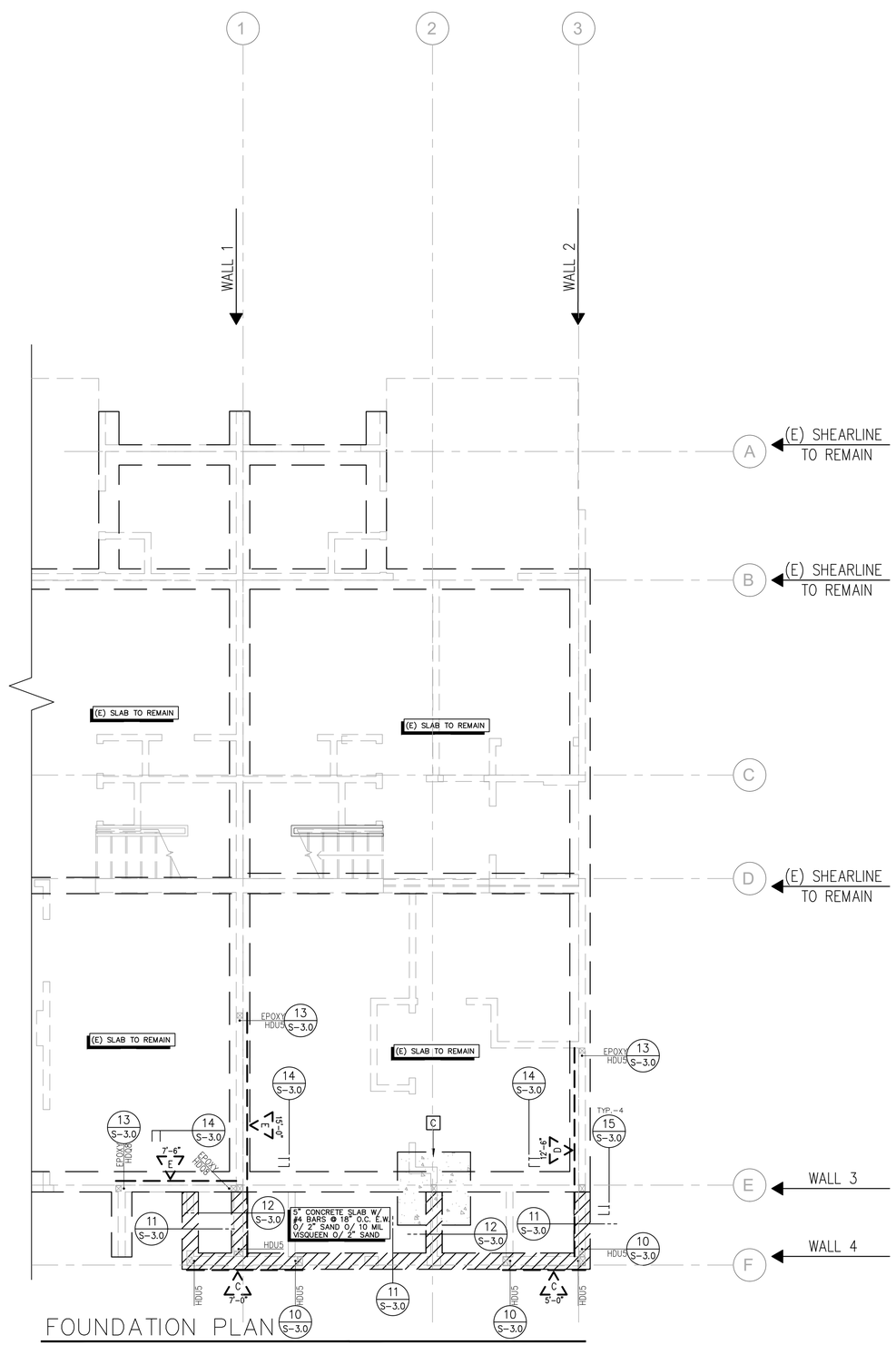

FOUNDATION PLAN

SCALE: 1/4"=1'-0"

LAUTERBACH & ASSOCIATES
ARCHITECTS INC.
David C. Kesterson, Architect • Ilona Scott, Architect • Mark S. Pettit, Architect
300 MONTGOMERY AVENUE, OXNARD, CALIFORNIA 93036 | 805-988-0912 | FAX 805-981-4510 | www.la-arch.com

REGISTERED PROFESSIONAL ENGINEER SHANE DENNIS MEHLER No. M34632 MECHANICAL STATE OF CALIFORNIA

REGISTERED PROFESSIONAL ENGINEER SHANE DENNIS MEHLER No. C70891 CIVIL STATE OF CALIFORNIA

CONCORD DRIVE APARTMENTS

2950 & 2956 CONCORD DRIVE
OXNARD, CA. 93036

CITY OF OXNARD HOUSING AUTHORITY

435 S. D STREET
OXNARD, CALIFORNIA 93030

NO	DESCRIPTION	DATE
1	SUBMIT	02-26-2020

ISSUE

JOB NO. 20-190209

DRAWN BY:
CHECKED BY:
PROJECT MANAGER:
PRINT DATE: 2/15/19 8:36:51 AM

FOUNDATION PLAN

S-2.0

THESE DRAWINGS AND SPECIFICATIONS ARE THE PROPERTY AND COPYRIGHT OF LAUTERBACH & ASSOCIATES. ALL RIGHTS RESERVED, AND SHALL NOT BE USED ON ANY OTHER WORK OR PROJECT EXCEPT BY WRITTEN AGREEMENT WITH LAUTERBACH & ASSOCIATES. WRITTEN DIMENSIONS SHALL TAKE PRECEDENCE OVER SCALED DIMENSIONS AND SHALL BE VERIFIED ON THE JOB SITE. ANY DISCREPANCY SHALL BE BROUGHT TO THE NOTICE OF LAUTERBACH & ASSOCIATES PRIOR TO COMMENCEMENT OF ANY WORK.

- 4X6 POST UNO
- 6X6 POST UNO
- POST ABOVE
- BEAM # IN CALCULATIONS
- BEARING WALLS
- NON-BEARING WALLS
- BEARING WALLS ABOVE

8 / S-3.0 CALIFORNIA FRAMING

1. FOR TYPICAL CUTTING, NOTCHING, AND BORING SEE 1/S-3.0
2. FOR TYPICAL OPENING IN SHEAR PANELS SEE 9/S-3.0
3. FOR TYPICAL HOLD-DOWN STRAP AT UPPER FLOOR SEE 7/S-3.0
4. FOR TYPICAL TOP PLATE SPLICE SEE 2 THRU 6/S-3.0,
5. PROVIDE DBL 2x TRIMMER AT EACH END OF EACH HDR/BEAM UNO
6. SHEATHE ENTIRE EXTERIOR WITH 'B' SHEAR WALL MIN. UNO
7. ALL EXT. BEARING WALLS 2X6 @ 16" O.C. & INT. BEARING WALLS 2X6 @ 16" O.C. UNO
8. PROVIDE MIN. 1/4" GAP BETWEEN TOP PL AND BEAMS @ ALL NON-BEARING WALLS U.N.O
9. ALL STRAPS (MST W/ (2)-2X MIN., MSTI W/ TJI, ETC) BY SIMPSON STRONG-TIE MEET LARR #25713 AND ICC ESR #2105
10. ALL ANGLES (A35, LTP4, ETC) BY SIMPSON STRONG-TIE MEET LARR #25716 AND ICC ESR #3096
11. ALIGN RR OR FJ WITH DRAG STRAPS WHERE SPECIFIED. PROVIDE EDGE NAILING ALONG ENTIRE RR OR FJ
12. ALL 'Q' FASTENERS IMPLY SDS2.5 SCREWS TO BE USED
14. EPOXY USING SIMPSON SET-XP (ICC ESR #2508 AND LARR#25744)
15. A COPY OF THE LOS ANGELES REPORT AND/OR CONDITIONS OF LISTING SHALL BE MADE AVAILABLE AT THE JOB SITE

Diaphragm and Shear Wall Notes

1. Roof diaphragm nailing to be inspected before covering. Face grain of plywood shall be perpendicular to supports. Floor shall have tongue and groove or blocked panel edges. Plywood spans shall conform with Table 2304.8(1)
2. All diaphragm and shear wall nailing shall utilize common nails or galvanized box.

SHEAR WALL SCHEDULE 6

(DOUBLE LETTER INDICATES TWO SIDED APPLICATION W/ 3/4" dia. A.B. @ 12" O.C. & A35 OR LTP4 @ 6" O.C.)

MARK	W.S.P 3	EDGE NAILING 4	ANCHOR BOLTS 5	SILL NAILING @ UPPER FLOORS	ALLOWABLE SHEAR (plf) 6	A35 OR LTP4 SPACING (MIN.)
A	15/32"	8d @ 6" o.c.	5/8" dia. @ 32" o.c.	16d @ 6" o.c.	200	32" O.C.
B	15/32"	10d @ 6" o.c.	5/8" dia. @ 24" o.c.	16d @ 4" o.c.	255	24" O.C.
C 1	15/32"	10d @ 4" o.c.	5/8" dia. @ 16" o.c.	SDS 1/4"x6"@6"o.c. 2	383	16" O.C.
D 1	15/32"	10d @ 3" o.c.	5/8" dia. @ 16" o.c.	SDS 1/4"x6"@6"o.c. 2	499	12" O.C.
E 1	15/32"	10d @ 2" o.c.	5/8" dia. @ 16" o.c.	SDS 1/4"x6"@4"o.c. 2	653	8" O.C.
#	EXISTING SHEAR WALL SHEATHING, NAILING AND HOLD DOWNS TO REMAIN U.N.O.					

1. 3x boundary & edge studs required. 3x pressure treated sill plate required against concrete. (For walls CC, DD, & EE, 3x sill plate required at upper floors.)
2. Simpson SDS 1/4"X6" screws staggered into 4x minimum.
3. Wood Structural Panel applied over studs spaced at 16" o.c. Use 5-ply STRUCT I plywood, PS1-09 or STRUCT I OSB, PS2-10.
4. Nailing at intermediate members to be spaced @ 12" O.C. Only common nails shall be used. (10d-0.148" dia., 8d-0.131" dia.) Nail guns using "clipped head" or "sinker" nails are not acceptable. Stagger nailing in top plates, boundary members, and edge members. Edge distance for nailing at 3x boundary and panel edges shall be 1/2" minimum.
5. Use 12" min. long anchor bolts extending 4-1/2" out of concrete min.
6. Based on 2016 chapter 23 of the CBC (reduced 25%)

HOLDOWN NOTES

1. All bolt holes shall be 1/8" (maximum) over-size at the connection of holdowns to posts. Inspectors to verify.
2. Holdown connection bolts/nuts shall be torqued 1/2 turn beyond finger tight or as required by manufacturer. Inspector shall verify by random inspection prior to covering walls.
3. Approved plate washers in lieu of cut washers to be used for plywood shear wall sill plate anchor bolts and for holdown connector bolts at shear walls.

MINIMUM SIZE FOR SQUARE PLATE WASHERS

BOLT SIZE	PLATE SIZE
5/8"	3"X3"X.229"
3/4"	3"X3"X.229"

(E) F.J. TO REMAIN U.N.O.

2X8 R.R. @ 16" O.C. U.N.O.

2X6 C.J. @ 16" O.C. U.N.O.

FLOOR SHEATHING

23/32" T&G STURD-1-FLOOR @ TILE PSR. 48/24

Nailing:

BOUNDARY	10 d @ 6 in. o.c.
EDGE	10 d @ 6 in. o.c.
FIELD	10 d @ 12 in. o.c.

1-1/8" T&G STURD-1-FLOOR U.N.O. PSR. 60/48

Nailing:

BOUNDARY	12 d @ 6 in. o.c.
EDGE	12 d @ 6 in. o.c.
FIELD	12 d @ 12 in. o.c.

ROOF SHEATHING

19/32" CDX PLYWOOD OR OSB PSR. 40/20

Nailing:

BOUNDARY	10 d @ 6 in. o.c.
EDGE	10 d @ 6 in. o.c.
FIELD	10 d @ 12 in. o.c.

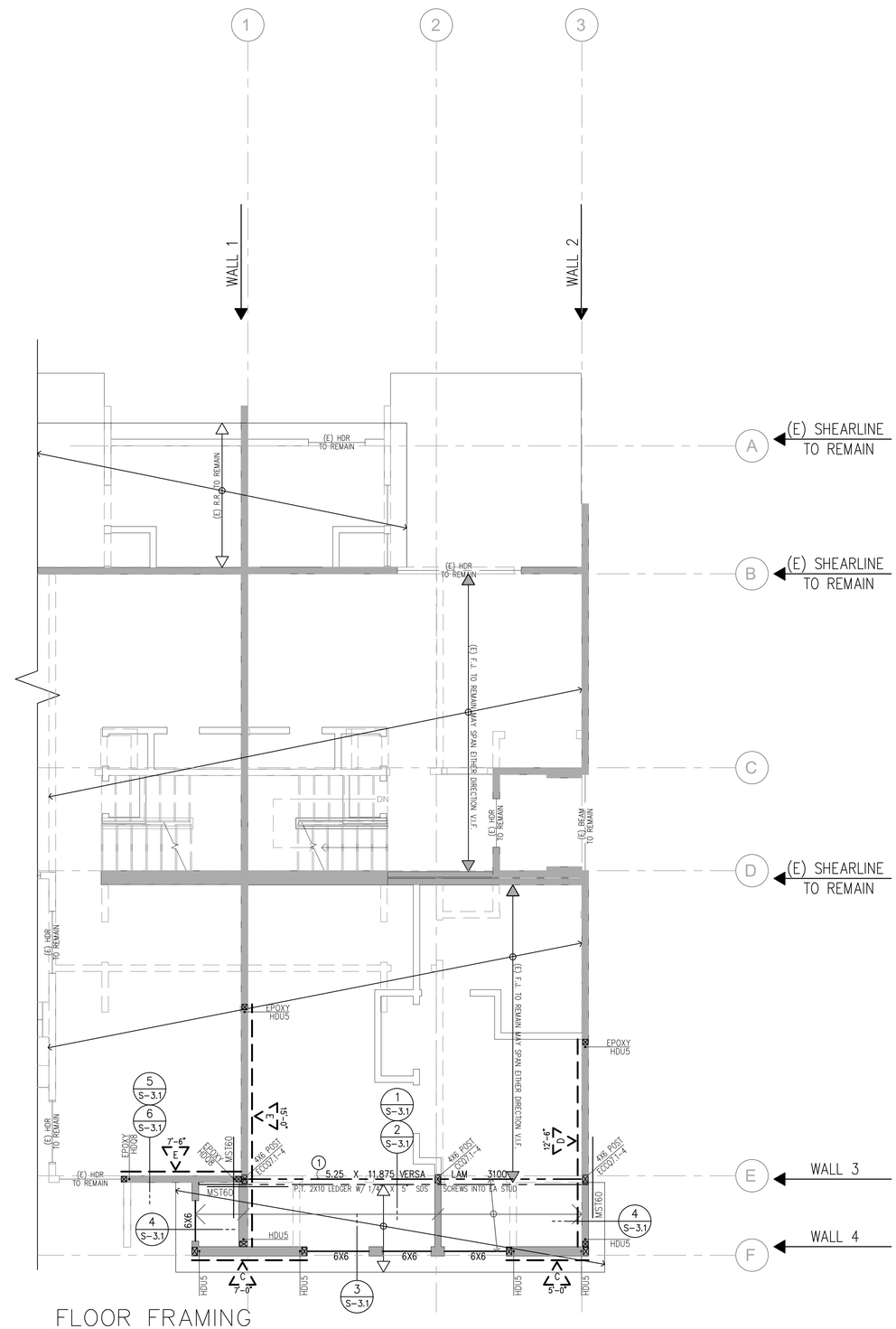

FLOOR FRAMING

SCALE: 1/4"=1'-0"

LAUTERBACH & ASSOCIATES
ARCHITECTS INC.
David C. Kesterson, Architect • Ilona Scott, Architect • Mark S. Pettit, Architect
300 MONTGOMERY AVENUE, OXNARD, CALIFORNIA 93036 | 805-988-0912 | FAX 805-981-4510 | www.la-arch.com

REGISTERED PROFESSIONAL ENGINEER SHANE DENNIS No. M34632 MECHANICAL STATE OF CALIFORNIA

REGISTERED PROFESSIONAL ENGINEER SHANE DENNIS No. C70891 CIVIL STATE OF CALIFORNIA

CONCORD DRIVE APARTMENTS
2950 & 2956 CONCORD DRIVE
OXNARD, CA, 93036

CITY OF OXNARD HOUSING AUTHORITY
435 S. D STREET
OXNARD, CALIFORNIA 93030

NO	DESCRIPTION	DATE
1	SUBMIT	02-26-2020

ISSUE

JOB NO. 20-190209

DRAWN BY:
CHECKED BY:
PROJECT MANAGER:
PRINT DATE: 2/15/19 8:36:51 AM

FLOOR FRAMING PLAN

S-2.1

THESE DRAWINGS AND SPECIFICATIONS ARE THE PROPERTY AND COPYRIGHT OF LAUTERBACH & ASSOCIATES, ALL RIGHTS RESERVED, AND SHALL NOT BE USED ON ANY OTHER WORK OR PROJECT EXCEPT BY WRITTEN AGREEMENT WITH LAUTERBACH & ASSOCIATES. WRITTEN DIMENSIONS SHALL TAKE PRECEDENCE OVER SCALED DIMENSIONS AND SHALL BE VERIFIED ON THE JOB SITE. ANY DISCREPANCY SHALL BE BROUGHT TO THE NOTICE OF LAUTERBACH & ASSOCIATES PRIOR TO COMMENCEMENT OF ANY WORK.

- 4X6 POST UNO
- 6X6 POST UNO
- POST ABOVE
- BEAM # IN CALCULATIONS
- BEARING WALLS
- NON–BEARING WALLS
- BEARING WALLS ABOVE

8 / S–3.0 CALIFORNIA FRAMING

1. FOR TYPICAL CUTTING, NOTCHING, AND BORING SEE 1/S–3.0
2. FOR TYPICAL OPENING IN SHEAR PANELS SEE 9/S–3.0
3. FOR TYPICAL HOLD–DOWN STRAP AT UPPER FLOOR SEE 7/S–3.0
4. FOR TYPICAL TOP PLATE SPLICE SEE 2 THRU 6/S–3.0,
5. PROVIDE DBL 2x TRIMMER AT EACH END OF EACH HDR/BEAM UNO
6. SHEATHE ENTIRE EXTERIOR WITH 'B' SHEAR WALL MIN. UNO
7. ALL EXT. BEARING WALLS 2X6 @ 16" O.C. & INT. BEARING WALLS 2X6 @ 16" O.C. UNO
8. PROVIDE MIN. 1/4" GAP BETWEEN TOP PL AND BEAMS @ ALL NON–BEARING WALLS U.N.O
9. ALL STRAPS (MST W/ (2)–2X MIN., MSTI W/ TJI, ETC) BY SIMPSON STRONG–TIE MEET LARR #25713 AND ICC ESR #2105
10. ALL ANGLES (A35, LTP4, ETC) BY SIMPSON STRONG–TIE MEET LARR #25716 AND ICC ESR #3096
11. ALIGN RR OR FJ WITH DRAG STRAPS WHERE SPECIFIED. PROVIDE EDGE NAILING ALONG ENTIRE RR OR FJ
12. ALL 'Q' FASTENERS IMPLY SDS2.5 SCREWS TO BE USED
14. EPOXY USING SIMPSON SET–XP (ICC ESR #2508 AND LARR#25744)
15. A COPY OF THE LOS ANGELES REPORT AND/OR CONDITIONS OF LISTING SHALL BE MADE AVAILABLE AT THE JOB SITE

Diaphragm and Shear Wall Notes

1. Roof diaphragm nailing to be inspected before covering. Face grain of plywood shall be perpendicular to supports. Floor shall have tongue and groove or blocked panel edges. Plywood spans shall conform with Table 2304.8(1)
2. All diaphragm and shear wall nailing shall utilize common nails or galvanized box.

SHEAR WALL SCHEDULE [6]

(DOUBLE LETTER INDICATES TWO SIDED APPLICATION W/ 3/4" dia. A.B. @ 12" O.C. & A35 OR LTP4 @ 6" O.C.)

MARK	W.S.P [3]	EDGE NAILING [4]	ANCHOR BOLTS [5]	SILL NAILING @ UPPER FLOORS	ALLOWABLE SHEAR (plf) [6]	A35 OR LTP4 SPACING (MIN.)
A	15/32"	8d @ 6" o.c.	5/8" dia. @ 32" o.c.	16d @ 6" o.c.	200	32" O.C.
B	15/32"	10d @ 6" o.c.	5/8" dia. @ 24" o.c.	16d @ 4" o.c.	255	24" O.C.
C [1]	15/32"	10d @ 4" o.c.	5/8" dia. @ 16" o.c.	SDS 1/4"x6"@6"o.c. [2]	383	16" O.C.
D [1]	15/32"	10d @ 3" o.c.	5/8" dia. @ 16" o.c.	SDS 1/4"x6"@6"o.c. [2]	499	12" O.C.
E [1]	15/32"	10d @ 2" o.c.	5/8" dia. @ 16" o.c.	SDS 1/4"x6"@4"o.c. [2]	653	8" O.C.
#	EXISTING SHEAR WALL SHEATHING, NAILING AND HOLD DOWNS TO REMAIN U.N.O.					

1. 3x boundary & edge studs required. 3x pressure treated sill plate required against concrete. (For walls CC, DD, & EE, 3x sill plate required at upper floors.)
2. Simpson SDS 1/4"X6" screws staggered into 4x minimum.
3. Wood Structural Panel applied over studs spaced at 16" o.c. Use 5–ply STRUCT I plywood, PS1–09 or STRUCT I OSB, PS2–10.
4. Nailing at intermediate members to be spaced @ 12" O.C. Only common nails shall be used. (10d–0.148" dia., 8d–0.131" dia.) Nail guns using "clipped head" or "sinker" nails are not acceptable. Stagger nailing in top plates, boundary members, and edge members. Edge distance for nailing at 3x boundary and panel edges shall be 1/2" minimum.
5. Use 12" min. long anchor bolts extending 4–1/2" out of concrete min.
6. Based on 2016 chapter 23 of the CBC (reduced 25%)

HOLDOWN NOTES

1. All bolt holes shall be 1/8" (maximum) over–size at the connection of holdowns to posts. Inspectors to verify.
2. Holdown connection bolts/nuts shall be torqued 1/2 turn beyond finger tight or as required by manufacturer. Inspector shall verify by random inspection prior to covering walls.
3. Approved plate washers in lieu of cut washers to be used for plywood shear wall sill plate anchor bolts and for holdown connector bolts at shear walls.

MINIMUM SIZE FOR SQUARE PLATE WASHERS

BOLT SIZE	PLATE SIZE
5/8"	3"X3"X.229"
3/4"	3"X3"X.229"

(E) F.J. TO REMAIN U.N.O.

2X8 R.R. @ 16" O.C. U.N.O.

2X6 C.J. @ 16" O.C. U.N.O.

FLOOR SHEATHING

23/32" T&G STURD–1–FLOOR @ TILE PSR. 48/24

Nailing:

BOUNDARY	10 d @ 6 in. o.c.
EDGE	10 d @ 6 in. o.c.
FIELD	10 d @ 12 in. o.c.

1–1/8" T&G STURD–1–FLOOR U.N.O. PSR. 60/48

Nailing:

BOUNDARY	12 d @ 6 in. o.c.
EDGE	12 d @ 6 in. o.c.
FIELD	12 d @ 12 in. o.c.

ROOF SHEATHING

19/32" CDX PLYWOOD OR OSB PSR. 40/20

Nailing:

BOUNDARY	10 d @ 6 in. o.c.
EDGE	10 d @ 6 in. o.c.
FIELD	10 d @ 12 in. o.c.

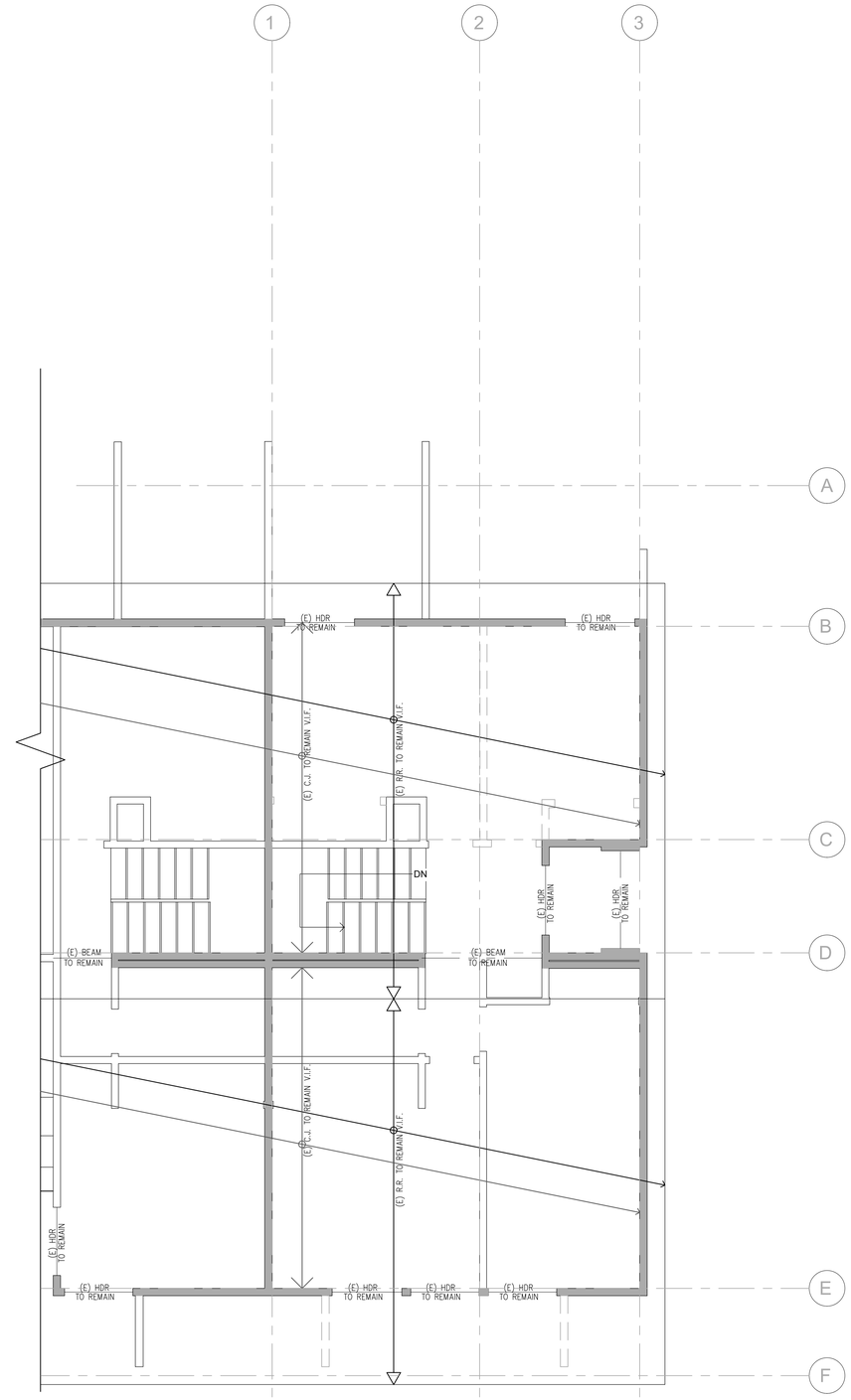

ROOF FRAMING PLAN

SCALE: 1/4"=1'–0"

LAUTERBACH & ASSOCIATES
ARCHITECTS INC.
David C. Kesterson, Architect • Ilona Scott, Architect • Mark S. Pettit, Architect
300 MONTGOMERY AVENUE, OXNARD, CALIFORNIA 93036 | 805-988-0912 | FAX 805-981-4510 | www.la-arch.com

REGISTERED PROFESSIONAL ENGINEER SHANE DENNIS STRUCTURAL No. M34632 STATE OF CALIFORNIA

REGISTERED PROFESSIONAL ENGINEER SHANE DENNIS CIVIL No. C78591 STATE OF CALIFORNIA

CONCORD DRIVE APARTMENTS
2950 & 2956 CONCORD DRIVE
OXNARD, CA, 93036

CITY OF OXNARD HOUSING AUTHORITY
435 S. D STREET
OXNARD, CALIFORNIA 93030

NO.	DESCRIPTION	DATE
1	SUBMIT	02-26-2020

ISSUE

JOB NO. 20-190209

DRAWN BY:
CHECKED BY:
PROJECT MANAGER:
PRINT DATE: 2/15/19 8:36:51 AM

ROOF FRAMING PLAN

S-2.2

THESE DRAWINGS AND SPECIFICATIONS ARE THE PROPERTY AND COPYRIGHT OF LAUTERBACH & ASSOCIATES. ALL RIGHTS RESERVED, AND SHALL NOT BE USED ON ANY OTHER WORK OR PROJECT EXCEPT BY WRITTEN AGREEMENT WITH LAUTERBACH & ASSOCIATES. WRITTEN DIMENSIONS SHALL TAKE PRECEDENCE OVER SCALED DIMENSIONS AND SHALL BE VERIFIED ON THE JOB SITE. ANY DISCREPANCY SHALL BE BROUGHT TO THE NOTICE OF LAUTERBACH & ASSOCIATES PRIOR TO COMMENCEMENT OF ANY WORK.

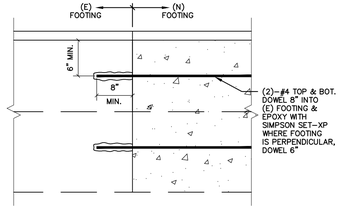

DEPUTY INSPECTION REQ'D FOR EPOXY WORK

15 SCALE: NTS

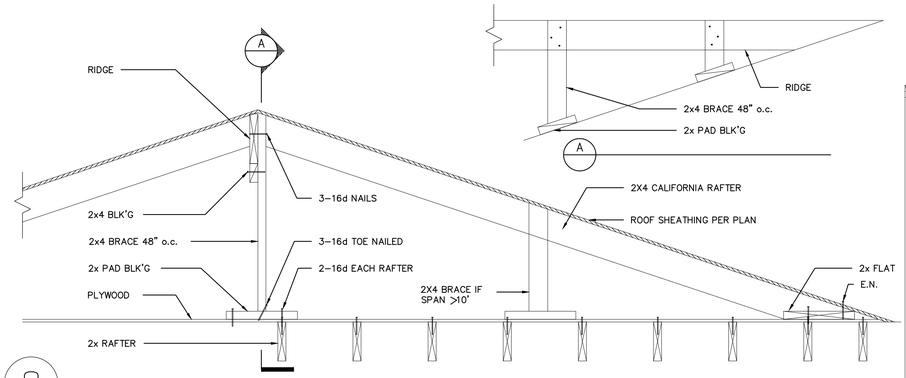

8 SCALE: NTS

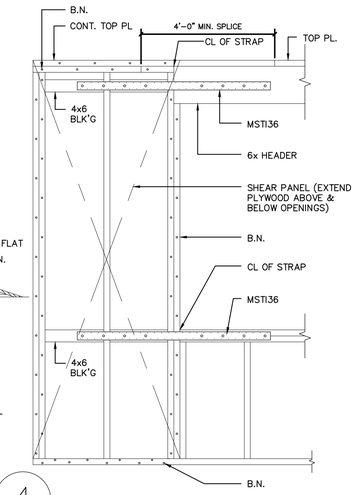

4 SCALE: NTS

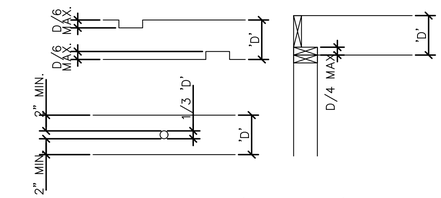

NOTCHING & BORING FLOOR JOISTS (CBC 2308.4.2.4)
(NOTCHING NOT PERMITTED IN MIDDLE 1/3 OF JOIST SPAN)

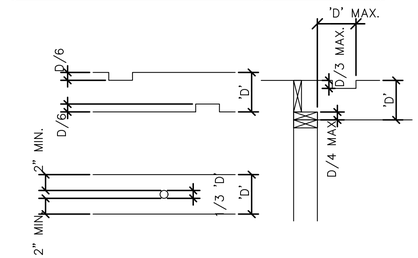

NOTCHING & BORING RAFTERS & CEILING JOISTS (CBC 2308.7.4)
(NOTCHING NOT PERMITTED IN MIDDLE 1/3 OF RAFTER OR JOIST SPAN)

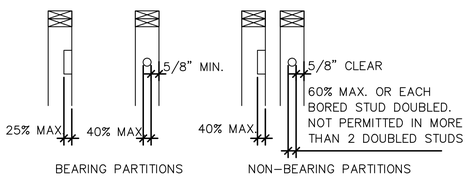

NOTCHING AND BORING WALL STUDS (CBC 2308.5.9/2308.5.10)

1 SCALE: NTS

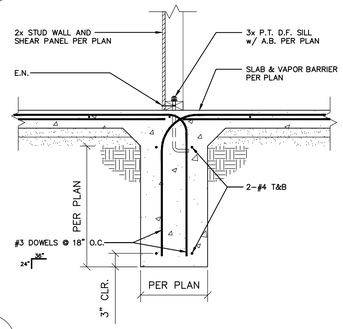

12 SCALE: NTS

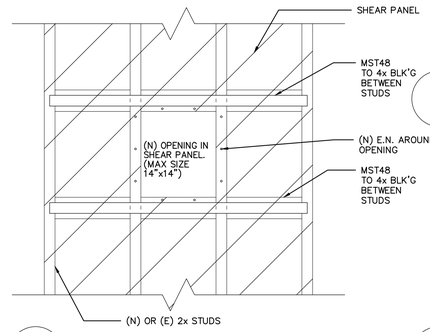

9 SCALE: NTS

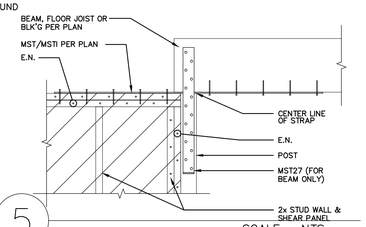

5 SCALE: NTS

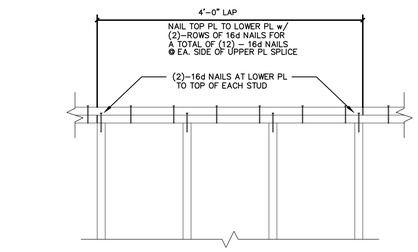

2 SCALE: NTS

NOTE: SLAB TO BE PACHOMETERED TO LOCATE EXISTING POST – TENSION CABLES PRIOR TO DRILLING. DRILL TO MAINTAIN 3" CLR. FROM ANY LOCATED CABLES.

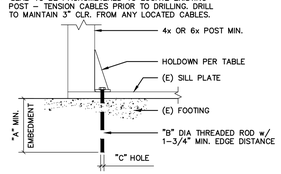

HOLDOWN	"A"	"B"	"C"	"D"
HDU2/ HDU5	12"	5/8"	3/4"	4685#
HDQ8	15"	7/8"	1"	8325#
HHDQ11	18"	1"	1–1/8"	11445#
HHDQ14	18"	1"	1–1/8"	14700#

USE "SIMPSON" SET–XP ADHESIVE SYSTEM w/ 2000 p.s.i. EXISTING CONCRETE. ALLOWABLE TENSILE LOADS = "D". (I.C.C. REPORT #2508)

DEPUTY INSPECTION REQ'D FOR ALL EPOXY WORK

13 SCALE: NTS

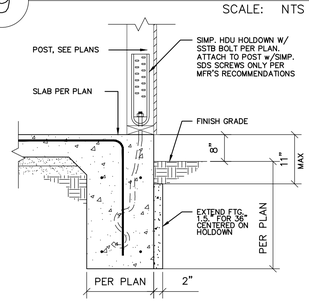

10 SCALE: NTS

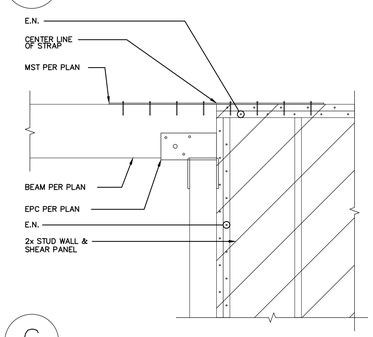

6 SCALE: NTS

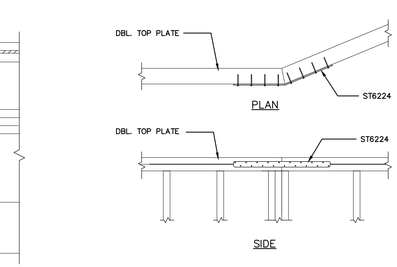

3 SCALE: NTS

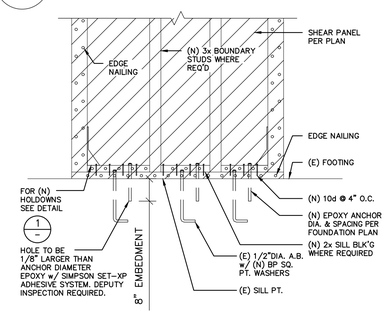

USE "SIMPSON" SET–XP ADHESIVE SYSTEM w/ 2000 p.s.i.
LARR #25744 (DEPUTY INSPECTION REQUIRED FOR EPOXY WORK)

14 SCALE: NTS

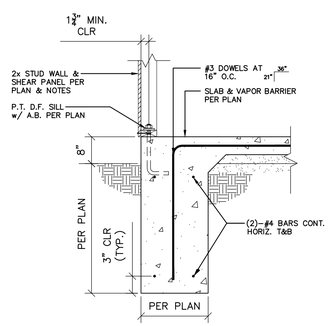

11 SCALE: NTS

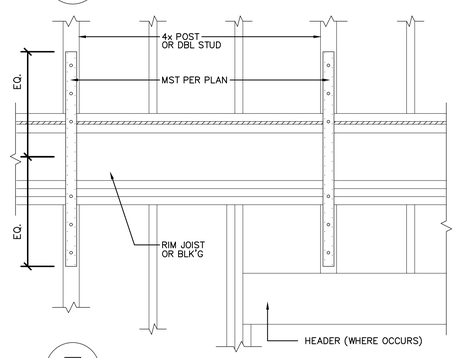

7 SCALE: NTS

LAUTERBACH & ASSOCIATES
ARCHITECTS INC.
David C. Kesterson, Architect • Ilona Scott, Architect • Mark S. Pettit, Architect
300 MONTGOMERY AVENUE, OXNARD, CALIFORNIA 93036 | 805-988-0912 | FAX 805-981-4510 | www.la-arch.com

REGISTERED PROFESSIONAL ENGINEER SHANE DENNIS No. M34632 MECHANICAL STATE OF CALIFORNIA

REGISTERED PROFESSIONAL ENGINEER SHANE DENNIS No. C76891 CIVIL STATE OF CALIFORNIA

CONCORD DRIVE APARTMENTS
2950 & 2956 CONCORD DRIVE
OXNARD, CA, 93036

CITY OF OXNARD HOUSING AUTHORITY
435 S. D STREET
OXNARD, CALIFORNIA 93030

NO	DESCRIPTION	DATE
1	SUBMIT	02-26-2020

ISSUE

JOB NO. 20-190209

DRAWN BY:
CHECKED BY:
PROJECT MANAGER:
PRINT DATE: 2/15/19 8:36:51 AM

STRUCTURAL DETAILS

S-3.0

THESE DRAWINGS AND SPECIFICATIONS ARE THE PROPERTY AND COPYRIGHT OF LAUTERBACH & ASSOCIATES, ALL RIGHTS RESERVED, AND SHALL NOT BE USED ON ANY OTHER WORK OR PROJECT EXCEPT BY WRITTEN AGREEMENT WITH LAUTERBACH & ASSOCIATES. WRITTEN DIMENSIONS SHALL TAKE PRECEDENCE OVER SCALED DIMENSIONS AND SHALL BE VERIFIED ON THE JOB SITE. ANY DISCREPANCY SHALL BE BROUGHT TO THE NOTICE OF LAUTERBACH & ASSOCIATES PRIOR TO COMMENCEMENT OF ANY WORK.

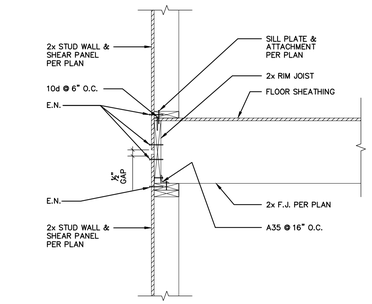

5 SCALE: NTS

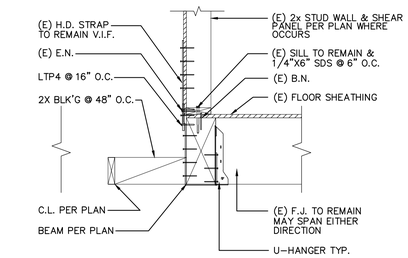

1 SCALE: NTS

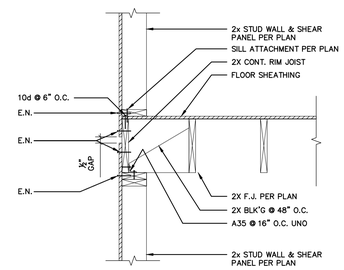

6 SCALE: NTS

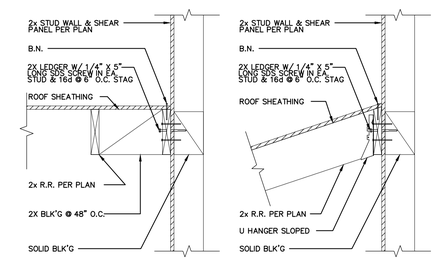

2 SCALE: NTS

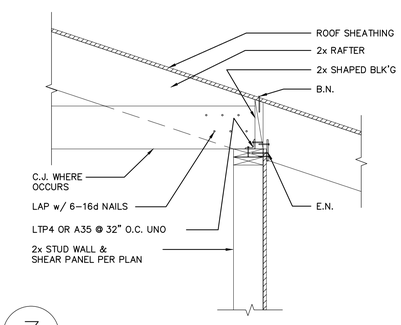

3 SCALE: NTS

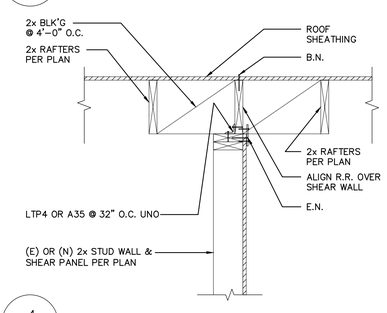

4 SCALE: NTS

13 SCALE: NTS

9 SCALE: NTS

14 SCALE: NTS

10 SCALE: NTS

15 SCALE: NTS

11 SCALE: NTS

16 SCALE: NTS

12 SCALE: NTS

7 SCALE: NTS

8 SCALE: NTS

THESE DRAWINGS AND SPECIFICATIONS ARE THE PROPERTY AND COPYRIGHT OF LAUTERBACH & ASSOCIATES, ALL RIGHTS RESERVED, AND SHALL NOT BE USED ON ANY OTHER WORK OR PROJECT EXCEPT BY WRITTEN AGREEMENT WITH LAUTERBACH & ASSOCIATES. WRITTEN DIMENSIONS SHALL TAKE PRECEDENCE OVER SCALED DIMENSIONS AND SHALL BE VERIFIED ON THE JOB SITE. ANY DISCREPANCY SHALL BE BROUGHT TO THE NOTICE OF LAUTERBACH & ASSOCIATES PRIOR TO COMMENCEMENT OF ANY WORK.

LAUTERBACH & ASSOCIATES
ARCHITECTS INC.
David C. Kesterson, Architect • Ilona Scott, Architect • Mark S. Pettit, Architect
300 MONTGOMERY AVENUE, OXNARD, CALIFORNIA 93036 | 805-988-0912 | FAX 805-981-4510 | www.la-arch.com

REGISTERED PROFESSIONAL ENGINEER SHANE DENNIS No. M34632 MECHANICAL STATE OF CALIFORNIA

REGISTERED PROFESSIONAL ENGINEER SHANE DENNIS No. C78991 CIVIL STATE OF CALIFORNIA

CONCORD DRIVE APARTMENTS
2950 & 2956 CONCORD DRIVE
OXNARD, CA. 93036

CITY OF OXNARD HOUSING AUTHORITY
435 S. D STREET
OXNARD, CALIFORNIA 93030

NO	DESCRIPTION	DATE
1	SUBMIT	02-26-2020

ISSUE

JOB NO. 20-190209

DRAWN BY:
CHECKED BY:
PROJECT MANAGER:
PRINT DATE: 2/15/19 8:36:51 AM

STRUCTURAL DETAILS (CONT'D)

S-3.1

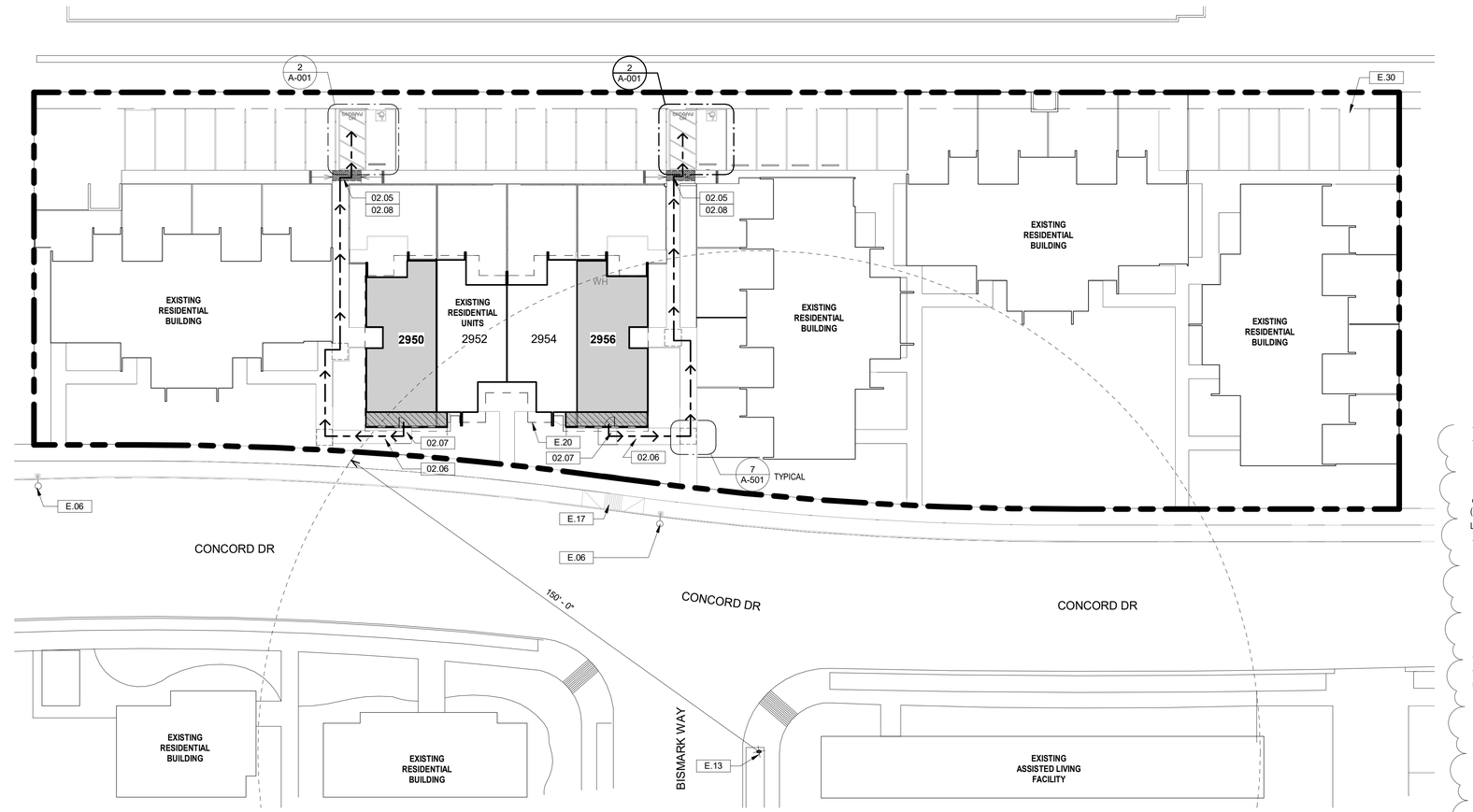

1 CD - Site Plan
1" = 20'-0"

0 10' 20' 40'

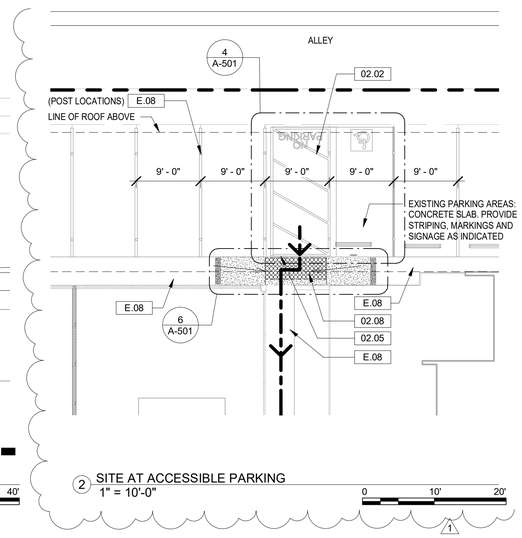

2 SITE AT ACCESSIBLE PARKING
1" = 10'-0"

0 10' 20'

KEYNOTES - EXISTING TO REMAIN

E.06	EXISTING STREET LIGHT
E.08	EXISTING SIDEWALK
E.13	EXISTING FIRE HYDRANT AND 150' RADIUS
E.17	EXISTING CURB RAMP
E.20	EXISTING ROOF
E.30	EXISTING CARPORT WITH 3" METAL POST 9'- 0" O.C.

KEYNOTES

02.02	PARKING SPACE AND VAN ACCESSIBLE RAMP: ACCESS COMPLIANT, SEE 4 & 5/A-501
02.05	ACCESSIBLE CURB RAMP
02.06	SLOPED WALK NOT TO EXCEED 5% SLOPE
02.07	LANDING LESS THAN 2% SLOPE IN ALL DIRECTIONS
02.08	TRUNCATED DOMES (SEE DETAIL 6/A-501)

SYMBOL LEGEND

PATH OF TRAVEL

NEW ADDITION AREA

UNIT TO BE MODIFIED

GENERAL NOTES

1. EXISTING CONCRETE SLAB AT CARPORT TO BE REPAIRED AS REQUIRED TO PROVIDE ADEQUATE SURFACE FOR ACCESSIBLE PARKING AND LOADING AREA.
2. ACCESSIBLE SPACE AND LOADING AREA TO BE STRIPED AND PAINTED AS REQUIRED (DETAIL 4/A-501)
3. EXISTING PATH OF TRAVEL AS INDICATED FROM RESIDENTIAL UNIT ENTRY TO DESIGNATED PARKING AND PUBLIC WAY DOES NOT EXCEED 5% SLOPE IN DIRECTION OF TRAVEL, DOES NOT EXCEED 2% CROSS SLOPE. VERIFY
4. MODIFICATIONS TO EXISTING BACKFLOW PREVENTER TO BE DESIGN-BUILD BY CONTRACTOR, INCLUDING NEW OR RELOCATION OF BFP, DETERMINATION OF NEW LOCATION , AND CONNECTIONS TO EXISTING SYSTEM.

LAUTERBACH & ASSOCIATES
ARCHITECTS INC.
David C. Kesterson, Architect • Ilona Scott, Architect • Mark S. Pettit, Architect
300 MONTGOMERY AVENUE, OXNARD, CALIFORNIA 93036 | 805-988-0912 | FAX 805-981-4510 | www.la-arch.com

LICENSED ARCHITECT
ILONA SCOTT
No. C11881
Ren. 06/21
STATE OF CALIFORNIA

CONCORD DRIVE APARTMENTS

2950 & 2956 CONCORD DRIVE
OXNARD, CA, 93036

CITY OF OXNARD HOUSING AUTHORITY

435 S. D STREET
OXNARD, CALIFORNIA 93030

NO	DESCRIPTION	DATE
1	PLAN CHECK SUBMITTAL	08/05/2020

ISSUE

JOB NO.	20-190708
DRAWN BY:	TJL
CHECKED BY:	ISS
PROJECT MANAGER:	ISS
PRINT DATE:	8/11/2020 1:53:19 PM

SITE PLAN

A-001

THESE DRAWINGS AND SPECIFICATIONS ARE THE PROPERTY AND COPYRIGHT OF LAUTERBACH & ASSOCIATES. ALL RIGHTS RESERVED, AND SHALL NOT BE USED ON ANY OTHER WORK OR PROJECT EXCEPT BY WRITTEN AGREEMENT WITH LAUTERBACH & ASSOCIATES. WRITTEN DIMENSIONS SHALL TAKE PRECEDENCE OVER SCALED DIMENSIONS AND SHALL BE VERIFIED ON THE JOB SITE. ANY DISCREPANCY SHALL BE BROUGHT TO THE NOTICE OF LAUTERBACH & ASSOCIATES PRIOR TO COMMENCEMENT OF ANY WORK.

G:\2019 Projects\20-190708 City of Oxnard\Set 4-Concord\Drawings\Architectural\2950 & 2956 Concord Drive - CD (Site and Elevs).rvt

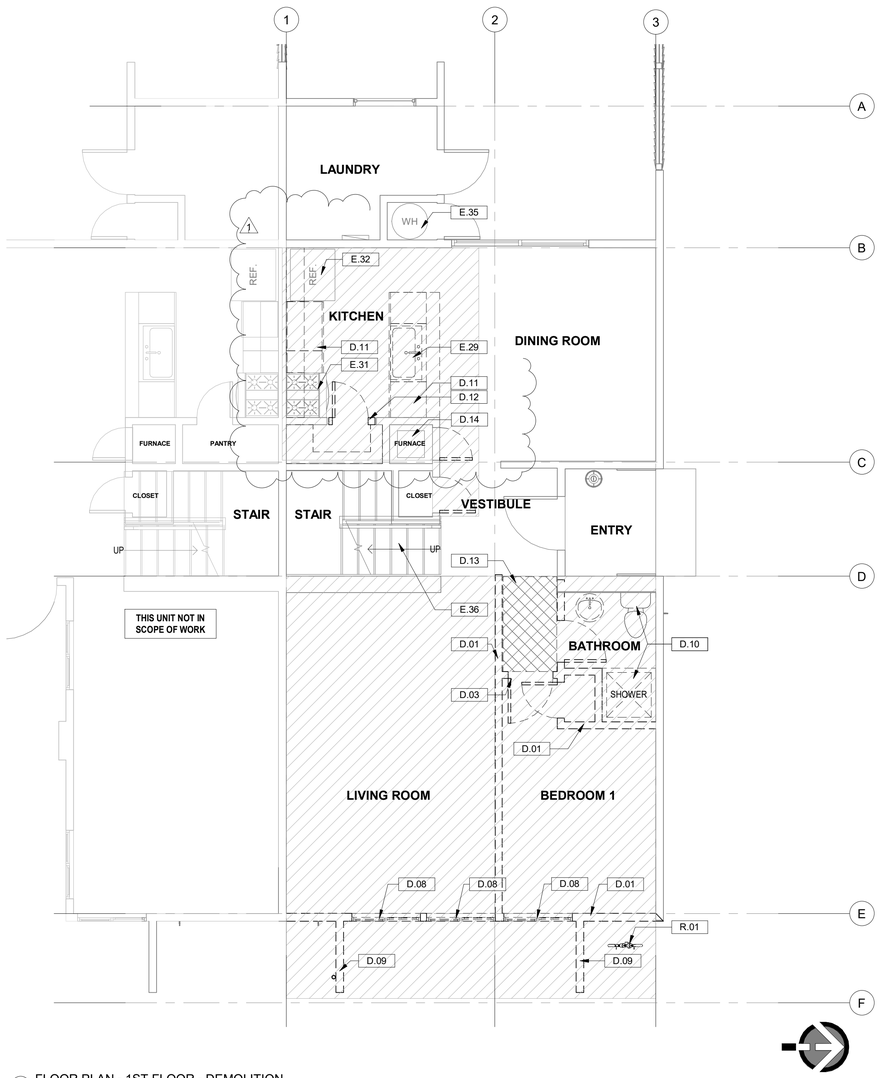

1 FLOOR PLAN - 1ST FLOOR - DEMOLITION
1/4" = 1'-0"

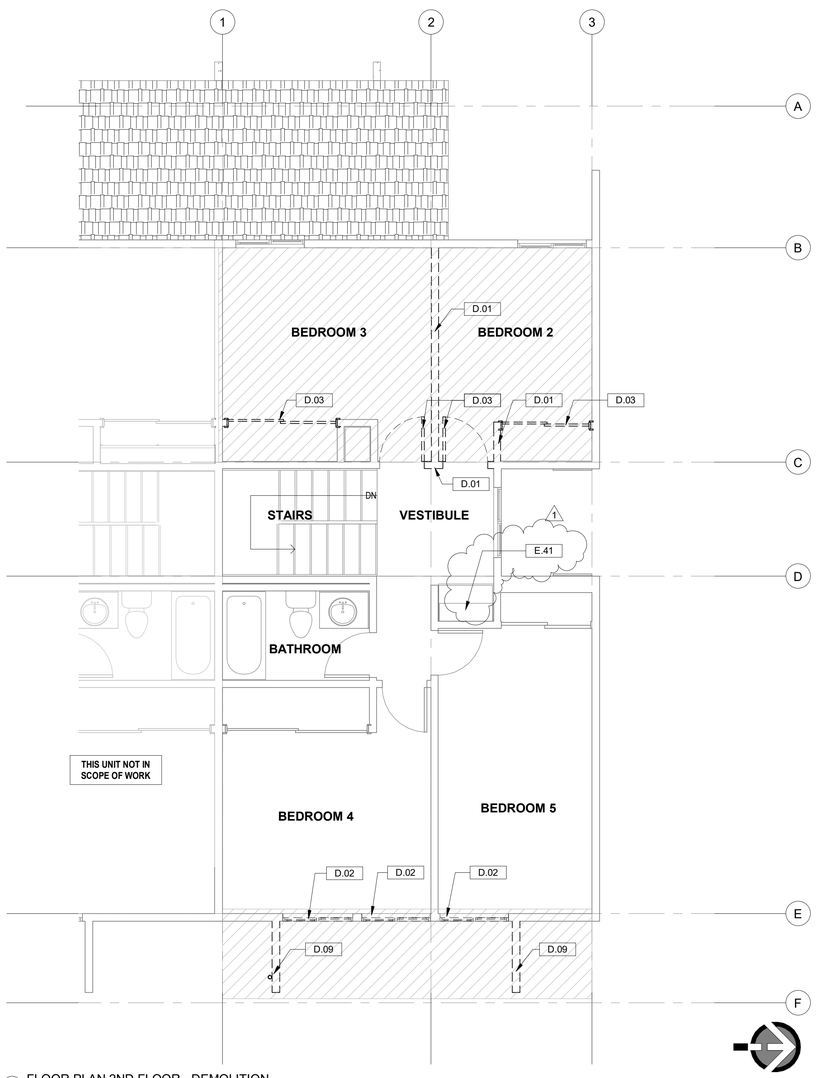

2 FLOOR PLAN 2ND FLOOR - DEMOLITION
1/4" = 1'-0"

KEYNOTES - EXISTING TO REMAIN

E.29	EXISTING KITCHEN SINK (PROTECT AND STORE FOR CLIENT'S RE-USE)
E.31	EXISTING STOVE: (PROTECT AND STORE FOR CLIENT'S RE-USE)
E.32	EXISTING REFRIGERATOR: (PROTECT AND STORE FOR CLIENT'S RE-USE)
E.35	EXISTING WATER HEATER
E.36	EXISTING STAIRS AND RAILING
E.41	EXISTING BUILT-IN UPPER AND LOWER CABINETS

KEYNOTES - RELOCATE EXISTING

R.01	RELOCATE EXISTING BACKFLOW DEVICE

KEYNOTES - DEMOLITION

D.01	DEMOLISH EXISTING WALL, TYP.
D.02	DEMOLISH EXISTING WINDOW
D.03	DEMOLISH EXISTING DOOR AND FRAME
D.08	DEMOLISH EXISTING WINDOW AND PORTION OF WALL TO ALLOW FOR EXPANSION
D.09	DEMOLISH EXISTING WING WALL
D.10	DEMOLISH EXISTING SHOWER, TOILET AND VANITY
D.11	DEMOLISH EXISTING UPPER AND LOWER CABINETS AND COUNTER
D.12	DEMOLISH PORTION OF EXISTING WALL
D.13	DEMOLISH PORTION OF EXISTING SOFFIT AT NEW ACCESSIBLE UNIT
D.14	DEMOLISH EXISTING FORCED AIR FURNACE TO ALLOW FOR INSTALLATION OF NEW FORCED AIR FURNACE

GENERAL DEMOLITION NOTES

1. IT IS THE RESPONSIBILITY OF THE CONTRACTOR TO VERIFY ALL CLEARANCES AND INSTALLATION REQUIREMENTS OF CONSTRUCTION ITEMS AGAINST EXISTING CONDITIONS AND DISPOSE OF REMOVED MATERIALS PER THE ORDINANCE.
2. THE CITY OF OXNARD HOUSING AUTHORITY SHALL HAVE THE FIRST RIGHT OF SALVAGE OF ITEMS SHOWN FOR DEMOLITION.
3. SEE MECH., ELEC., AND PLUMB. DWG'S FOR ADDITIONAL DEMOLITION NOTES AND CORRECT LAYOUT FOR SAWCUTS.
4. VERIFY ALL EXISTING DOORS TO BE REMOVED WITH PROPOSED REPLACEMENT DOOR ASSEMBLIES FOR SUFFICIENT CLEARANCE AND FRAMING REQUIREMENTS. DEMOLISH PORTIONS OF EXISTING WALL FRAMING AS REQ'D AND PROVIDE NEW FRAMING PER DETAILS WHERE REQUIRED. SEE DOOR SCHEDULE.
5. REMOVE EXISTING FLOOR FINISHES, MASTICS, ETC. DOWN TO EXISTING SLAB OR PLYWOOD FLOOR WHERE NEW FINISHES ARE INDICATED. PROVIDE PATCHING AND REFINISHING OF THE SURFACES PER MANUFACTURER'S SPECIFICATIONS FOR THE NEW FINISHES SELECTED TO INSURE PROPER INSTALLATION OF NEW FINISHES.
6. FOR EXISTING WALLS TO REMAIN, INSPECT FOR DAMAGE OF ANY KIND; REPLACE DAMAGED MATERIALS WITH NEW BEFORE NEW GYPSUM WALL BOARD IS APPLIED.
7. WHERE EXISTING PLUMBING AND OTHER UTILITIES ARE TO BE REMOVED, CAP ALL ABANDONED PIPING BELOW FINISH FLOOR AND WITHIN WALL, TYP. PRESERVE EXISTING ROUGH PLUMBING WHERE NECESSARY FOR RECONNECTION. SEE PLUMBING DRAWINGS.
8. EXISTING ITEMS TO REMAIN SHALL BE PROTECTED DURING DEMOLITION, OR TEMPORARILY REMOVED AND REPLACED AT CONTRACTOR'S OPTION.
9. PROTECT DURING DEMOLITION ANY STRUCTURAL ELEMENT TO REMAIN.
10. REMOVE EXISTING EXTERIOR PLASTER FINISHES AS REQUIRED. PROTECT EXISTING STRUCTURE FROM WEATHER OTHER DAMAGE DURING CONSTRUCTION, AND RESTORE MOISTURE PROTECTION SYSTEMS PRIOR TO INSTALLATION OF NEW PLASTER FINISHES.

NOTES:

1. DEMOLITION INCLUDES:
   A. REMOVAL OF GYP. BOARD CEILING AT FIRST FLOOR (ABOVE ACCESS COMPLIANT UNIT ONLY)
   B. REMOVAL OF DRYWALL ON THE WALLS, INSULATION INSTALLATION.
   C. REMOVAL OF FLOOR FINISHES TO SLAB AND PLYWOOD.
   D. ALERT ARCHITECT IF DAMAGE OR ROT IS FOUND .
2. FOR INTERIOR AND EXTERIOR TRENCHING LOCATIONS TO INSTALL UTILITIES, COORDINATE ARCHITECTURAL, STRUCTURAL, ELECTRICAL AND PLUMBING INFORMATION. VERIFY EXISTING UNDERGROUND CONDITIONS CURRENTLY UNKNOWN AND NOTIFY ARCHITECTS IF CONFLICTS ARE FOUND.
3. REFER TO SHEET A-201 FOR DEMOLITION ELEVATIONS

LEGEND

	DEMOLISH WALL
	DEMOLISH SOFFIT
	AREA OF WORK

LAUTERBACH & ASSOCIATES
ARCHITECTS INC.
David C. Kesterson, Architect • Ilona Scott, Architect • Mark S. Pettit, Architect
300 MONTGOMERY AVENUE, OXNARD, CALIFORNIA 93036 | 805-988-0912 | FAX 805-981-4510 | www.la-arch.com

LICENSED ARCHITECT ILONA SCOTT No. C11881 Ren. 06/21 STATE OF CALIFORNIA

CONCORD DRIVE APARTMENTS

2950 & 2956 CONCORD DRIVE
OXNARD, CA, 93036

CITY OF OXNARD HOUSING AUTHORITY

435 S. D STREET
OXNARD, CALIFORNIA 93030

NO	DESCRIPTION	DATE
1	PLAN CHECK SUBMITTAL	07/31/2020

ISSUE

JOB NO. 20-190209

DRAWN BY: TJL
CHECKED BY: ISS
PROJECT MANAGER: ISS
PRINT DATE: 8/10/2020 8:54:30 AM

DEMO FLOOR PLANS - 1ST & 2ND

A-100

THESE DRAWINGS AND SPECIFICATIONS ARE THE PROPERTY AND COPYRIGHT OF LAUTERBACH & ASSOCIATES. ALL RIGHTS RESERVED, AND SHALL NOT BE USED ON ANY OTHER WORK OR PROJECT EXCEPT BY WRITTEN AGREEMENT WITH LAUTERBACH & ASSOCIATES. WRITTEN DIMENSIONS SHALL TAKE PRECEDENCE OVER SCALED DIMENSIONS AND SHALL BE VERIFIED ON THE JOB SITE. ANY DISCREPANCY SHALL BE BROUGHT TO THE NOTICE OF LAUTERBACH & ASSOCIATES PRIOR TO COMMENCEMENT OF ANY WORK.

G:\2019 Projects\20-190708 City of Oxnard\Set 4-Concord\Drawings\Architectural\2950 & 2956 Concord Drive - CD (Floor Plans).rvt

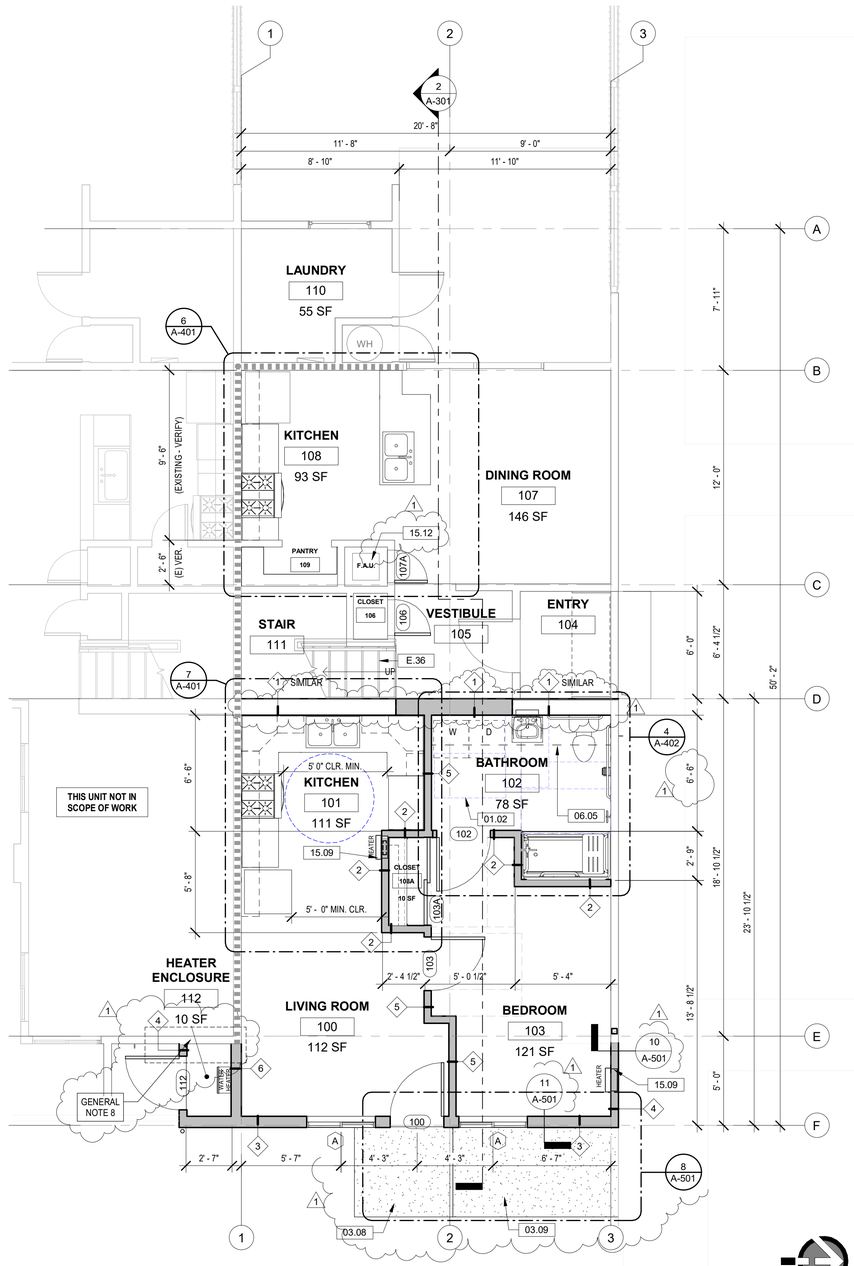

1 FLOOR PLAN - FIRST - PROPOSED
1/4" = 1'-0"

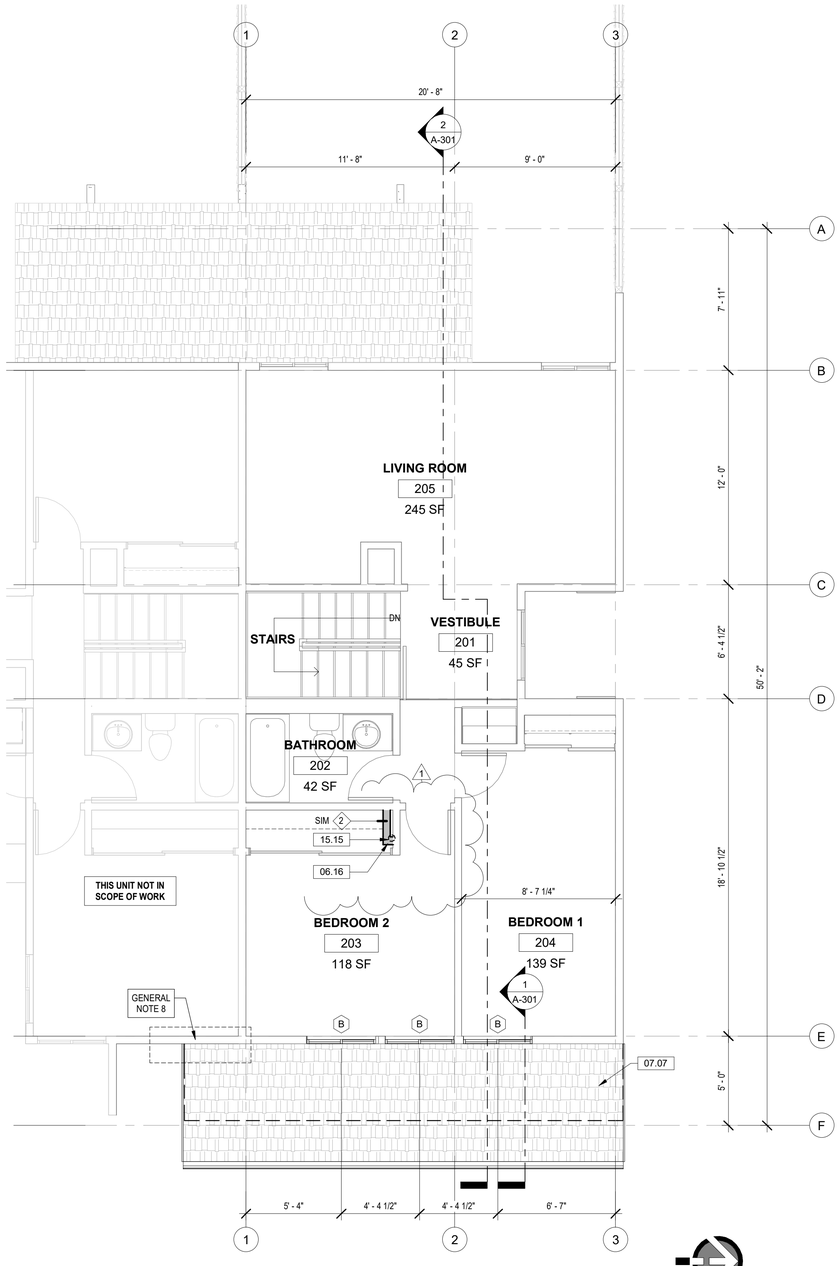

2 FLOOR PLAN - SECOND - PROPOSED
1/4" = 1'-0"

KEYNOTES - EXISTING TO REMAIN

E.36	EXISTING STAIRS AND RAILING

KEYNOTES

01.02	30"x48" CLEAR SPACE
03.08	NEW LANDING AT NEW APARTMENT ENTRANCE, LESS THAN 2% SLOPE IN ALL DIRECTIONS
03.09	SLOPED WALK NOT TO EXCEED 5% SLOPE
06.05	SOFFIT ABOVE (DUCT FOR DRYER AND FAN)
06.16	FURRED WALL (VENT FROM HEATER BELOW, DUCT TO ROOF)
07.07	NEW ROOF BELOW
15.09	WALL MOUNTED HEATER, REFER TO MECHANICAL PLANS
15.12	FORCED AIR FURNACE, SEE MECHANICAL PLANS
15.15	VENT TO ROOF (FROM HEATER BELOW)

GENERAL NOTES

1. CONTRACTOR TO VERIFY EXISTING WINDOW OPENINGS IN FIELD.
2. FOR NEW WATER HEATER ENCLOSURE, VERIFY MANUFACTURERS' MINIMUM CLEARANCE GUIDELINES.
3. WHERE WINDOWS AND DOORS ARE REMOVED AND NOT REPLACED INFILL TO MATCH SURROUNDING WALLS, WATERPROOF AND INSTALL EXTERIOR CEMENT PLASTER AND INTERIOR DRYWALL.
4. WHERE NEW WALLS ARE ADDED ADJACENT TO EXISTING WALL THEY SHALL BE FLUSH, SMOOTH, LEVEL AND SEAMLESS TO EXISTING ADJACENT SURFACES
5. REPAIR, WATERPROOF AND REPLACE WITH CEMENT PLASTER ANY AREAS DAMAGED BY WORK. MATCH FINISH, COLOR AND TEXTURE OF EXISTING ADJACENT SURFACES.
6. PAINT EXTERIOR NEW CEMENT PLASTER TO MATCH EXISTING. COLORS FOR EXTERIOR CEMENT PLASTER, DOORS, TRIMS, PATIO COVER, FASCIA, GUTTERS AND DOWNSPOUTS SELECTED BY CLIENT.
7. WHERE EXISTING UTILITIES ARE IN THE PATH OF CONSTRUCTION, RELOCATE PER CITY STANDARDS.
8. CONTRACTOR TO REVIEW EXISTING CONDITIONS AND REQUIREMENTS OF NEW CONSTRUCTION TO DETERMINE EXTENT OF REPAIRS REQUIRED AT THIS AREA. IF POSSIBLE, ALL WORK TO BE PERFORMED AT EXTERIOR.

LEGEND

- EXISTING WALL
- EXISTING PARTY WALL
- NEW WALL
- # FOR WALL TYPES SEE SHEET A-602
- A FOR WINDOW TYPES AND EGRESS SEE SHEET A-601

LAUTERBACH & ASSOCIATES
ARCHITECTS INC.
David C. Kesterson, Architect • Ilona Scott, Architect • Mark S. Pettit, Architect
300 MONTGOMERY AVENUE, OXNARD, CALIFORNIA 93036 | 805-988-0912 | FAX 805-981-4510 | www.la-arch.com

LICENSED ARCHITECT ILONA SCOTT No. C11881 Ren. 06/21 STATE OF CALIFORNIA

CONCORD DRIVE APARTMENTS

2950 & 2956 CONCORD DRIVE
OXNARD, CA, 93036

CITY OF OXNARD HOUSING AUTHORITY

435 S. D STREET
OXNARD, CALIFORNIA 93030

NO	DESCRIPTION	DATE
1	PLAN CHECK SUBMITTAL	07/31/2020

ISSUE

JOB NO.	20-190209
DRAWN BY:	TJL
CHECKED BY:	ISS
PROJECT MANAGER:	ISS
PRINT DATE:	8/10/2020 9:06:30 AM

FLOOR PLANS - 1ST & 2ND

A-101

THESE DRAWINGS AND SPECIFICATIONS ARE THE PROPERTY AND COPYRIGHT OF LAUTERBACH & ASSOCIATES. ALL RIGHTS RESERVED, AND SHALL NOT BE USED ON ANY OTHER WORK OR PROJECT EXCEPT BY WRITTEN AGREEMENT WITH LAUTERBACH & ASSOCIATES. WRITTEN DIMENSIONS SHALL TAKE PRECEDENCE OVER SCALED DIMENSIONS AND SHALL BE VERIFIED ON THE JOB SITE. ANY DISCREPANCY SHALL BE BROUGHT TO THE NOTICE OF LAUTERBACH & ASSOCIATES PRIOR TO COMMENCEMENT OF ANY WORK.

G:\2019 Projects\20-190708 City of Oxnard Set 4-Concord\Drawings\Architectural\2950 & 2956 Concord Drive - CD (Floor Plans).rvt

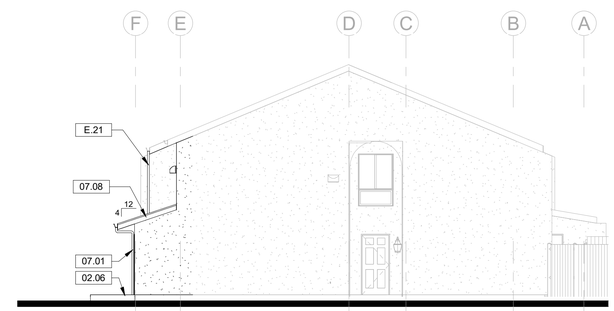

3 SOUTH ELEVATION - NEW (NORTH ELEVATION FLIPPED)
1/8" = 1'-0"

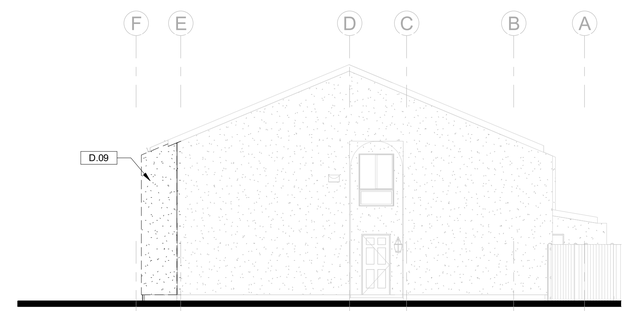

5 SOUTH ELEVATION - DEMOLITION (NORTH ELEVATION FLIPPED)
1/8" = 1'-0"

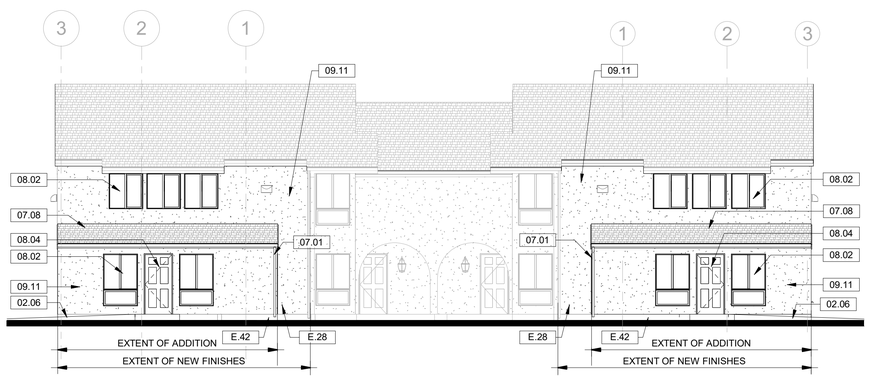

1 ELEVATION (WEST) - NEW
1/8" = 1'-0"

4 ELEVATION (WEST) DEMOLITION
1/8" = 1'-0"

KEYNOTES - EXISTING TO REMAIN

E.21	EXISTING ROOF GUTTER AND DOWNSPOUT
E.25	EXISTING BACKFLOW DEVICE
E.28	EXISTING HOSE BIBB
E.42	EXISTING WEEP SCREED
E.43	EXISTING PIPE

KEYNOTES - DEMOLITION

D.02	DEMOLISH EXISTING WINDOW
D.09	DEMOLISH EXISTING WING WALL
D.12	DEMOLISH EXISTING PORTION OF WALL
D.15	DEMOLISH EXISTING PLASTER WALL FINISHES

KEYNOTES

02.06	SLOPED WALK NOT TO EXCEED 5% SLOPE
07.01	RAIN GUTTER AND DOWNSPOUT, PAINTED TO MATCH WALL SURFACE
07.08	NEW ROOF
08.02	DUAL GLAZED WINDOW WITH VINYL FRAME
08.04	ENTRY DOORS, PAINTED
09.11	CEMENT PLASTER TO MATCH EXISTING

GENERAL DEMOLITION NOTES

1. IT IS THE RESPONSIBILITY OF THE CONTRACTOR TO VERIFY ALL CLEARANCES AND INSTALLATION REQUIREMENTS OF CONSTRUCTION ITEMS AGAINST EXISTING CONDITIONS AND DISPOSE OF REMOVED MATERIALS PER THE ORDINANCE.
2. THE CITY OF OXNARD HOUSING AUTHORITY SHALL HAVE THE FIRST RIGHT OF SALVAGE OF ITEMS SHOWN FOR DEMOLITION.
3. SEE MECH., ELEC., AND PLUMB. DWG'S FOR ADDITIONAL DEMOLITION NOTES AND CORRECT LAYOUT FOR SAWCUTS.
4. VERIFY ALL EXISTING DOORS TO BE REMOVED WITH PROPOSED REPLACEMENT DOOR ASSEMBLIES FOR SUFFICIENT CLEARANCE AND FRAMING REQUIREMENTS. DEMOLISH PORTIONS OF EXISTING WALL FRAMING AS REQ'D AND PROVIDE NEW FRAMING PER DETAILS WHERE REQUIRED. SEE DOOR SCHEDULE.
5. REMOVE EXISTING FLOOR FINISHES, MASTICS, ETC. DOWN TO EXISTING SLAB OR PLYWOOD FLOOR WHERE NEW FINISHES ARE INDICATED. PROVIDE PATCHING AND REFINISHING OF THE SURFACES PER MANUFACTURER'S SPECIFICATIONS FOR THE NEW FINISHES SELECTED TO INSURE PROPER INSTALLATION OF NEW FINISHES.
6. FOR EXISTING WALLS TO REMAIN, INSPECT FOR DAMAGE OF ANY KIND; REPLACE DAMAGED MATERIALS WITH NEW BEFORE NEW GYPSUM WALL BOARD IS APPLIED.
7. WHERE EXISTING PLUMBING AND OTHER UTILITIES ARE TO BE REMOVED, CAP ALL ABANDONED PIPING BELOW FINISH FLOOR AND WITHIN WALL, TYP. PRESERVE EXISTING ROUGH PLUMBING WHERE NECESSARY FOR RECONNECTION. SEE PLUMBING DRAWINGS.
8. EXISTING ITEMS TO REMAIN SHALL BE PROTECTED DURING DEMOLITION, OR TEMPORARILY REMOVED AND REPLACED AT CONTRACTOR'S OPTION.
9. PROTECT DURING DEMOLITION ANY STRUCTURAL ELEMENT TO REMAIN.
10. REMOVE EXISTING EXTERIOR PLASTER FINISHES AS REQUIRED. PROTECT EXISTING STRUCTURE FROM WEATHER OTHER DAMAGE DURING CONSTRUCTION, AND RESTORE MOISTURE PROTECTION SYSTEMS PRIOR TO INSTALLATION OF NEW PLASTER FINISHES.

GENERAL NOTES

1. CONTRACTOR TO VERIFY EXISTING WINDOW OPENINGS IN FIELD.
2. FOR NEW WATER HEATER ENCLOSURE, VERIFY MANUFACTURERS' MINIMUM CLEARANCE GUIDELINES.
3. WHERE WINDOWS AND DOORS ARE REMOVED AND NOT REPLACED INFILL TO MATCH SURROUNDING WALLS, WATERPROOF AND INSTALL EXTERIOR CEMENT PLASTER AND INTERIOR DRYWALL.
4. WHERE NEW WALLS ARE ADDED ADJACENT TO EXISTING WALL THEY SHALL BE FLUSH, SMOOTH, LEVEL, AND SEAMLESS.
5. REPAIR, WATERPROOF AND REPLACE WITH CEMENT PLASTER ANY AREAS DAMAGED BY WORK.
6. PAINT EXTERIOR NEW TO MATCH EXISTING. COLORS FOR EXTERIOR CEMENT PLASTER, DOORS, TRIMS, FASCIA, GUTTERS AND DOWNSPOUTS SELECTED BY CLIENT.
7. WHERE EXISTING UTILITIES ARE IN THE PATH OF CONSTRUCTION, RELOCATE PER CITY STANDARDS.
8. CONTRACTOR TO REVIEW EXISTING CONDITIONS AND REQUIREMENTS OF NEW CONSTRUCTION TO DETERMINE EXTENT OF REPAIRS REQUIRED AT THIS AREA. IF POSSIBLE, ALL WORK TO BE PERFORMED AT EXTERIOR.

THESE DRAWINGS AND SPECIFICATIONS ARE THE PROPERTY AND COPYRIGHT OF LAUTERBACH & ASSOCIATES. ALL RIGHTS RESERVED, AND SHALL NOT BE USED ON ANY OTHER WORK OR PROJECT EXCEPT BY WRITTEN AGREEMENT WITH LAUTERBACH & ASSOCIATES. WRITTEN DIMENSIONS SHALL TAKE PRECEDENCE OVER SCALED DIMENSIONS AND SHALL BE VERIFIED ON THE JOB SITE. ANY DISCREPANCY SHALL BE BROUGHT TO THE NOTICE OF LAUTERBACH & ASSOCIATES PRIOR TO COMMENCEMENT OF ANY WORK.

LAUTERBACH & ASSOCIATES
ARCHITECTS INC.
David C. Kesterson, Architect • Ilona Scott, Architect • Mark S. Pettit, Architect
300 MONTGOMERY AVENUE, OXNARD, CALIFORNIA 93036 | 805-988-0912 | FAX 805-981-4510 | www.la-arch.com

LICENSED ARCHITECT ILONA SCOTT No. C11881 Ren. 06/21 STATE OF CALIFORNIA

CONCORD DRIVE APARTMENTS

2950 & 2956 CONCORD DRIVE
OXNARD, CA, 93036

CITY OF OXNARD HOUSING AUTHORITY

435 S. D STREET
OXNARD, CALIFORNIA 93030

NO	DESCRIPTION	DATE

ISSUE

JOB NO.	20-190708
DRAWN BY:	TJL
CHECKED BY:	ISS
PROJECT MANAGER:	ISS
PRINT DATE:	8/10/2020 9:04:51 AM

ELEVATIONS

A-201

G:\2019 Projects\20-190708 City of Oxnard Set 4-Concord\Drawings\Architectural\2950 & 2956 Concord Drive - CD (Site and Elevs).rvt

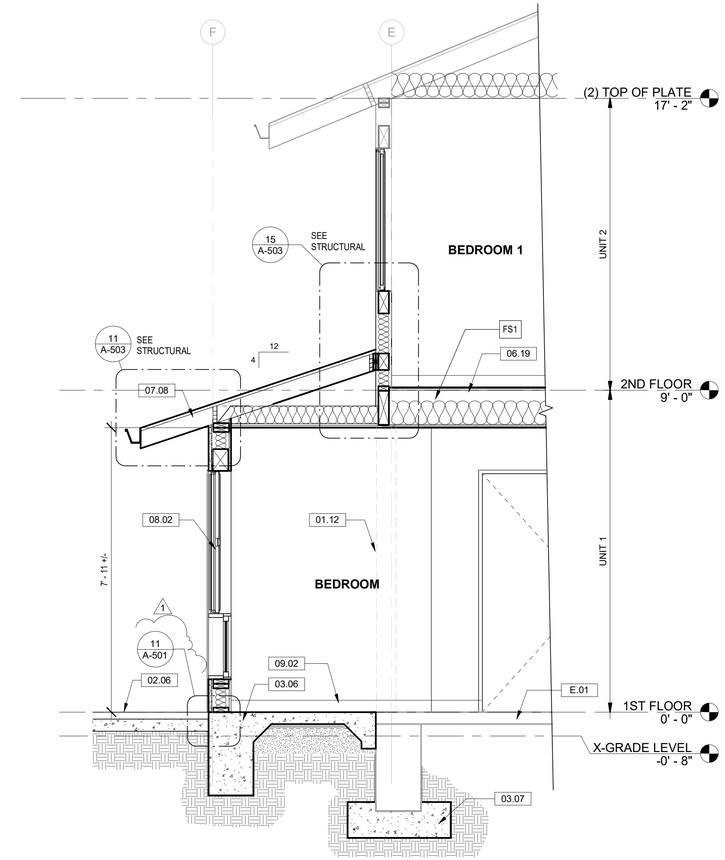

1 ENLARGED SECTION AT ADDITION
1/2" = 1'-0"

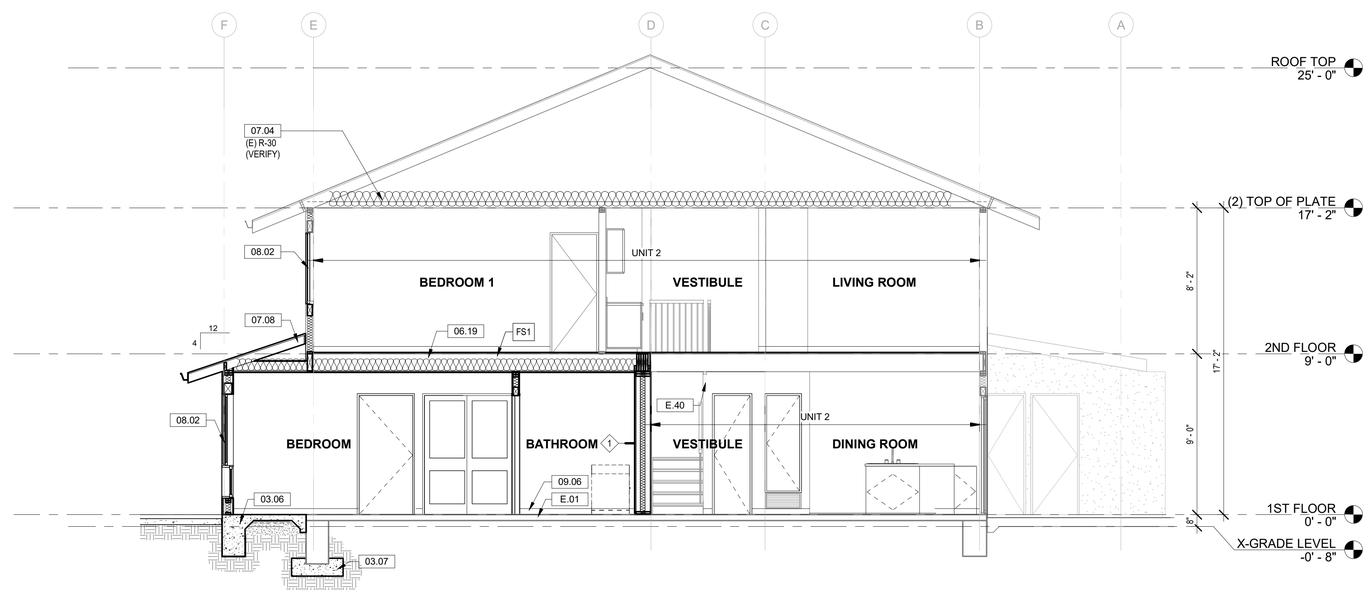

2 BUILDING SECTION
1/4" = 1'-0"

KEYNOTES - EXISTING TO REMAIN

E.01	EXISTING CONCRETE SLAB AND FOOTING
E.40	EXISTING SOFFIT

KEYNOTES

01.12	LINE OF DEMOLISHED EXTERIOR WALL
02.06	SLOPED WALK NOT TO EXCEED 5% SLOPE
03.06	NEW CONCRETE SLAB AND FOOTING
03.07	NEW CONCRETE PAD BELOW, BEYOND
06.19	EXISTING FLOOR CEILING SYSTEM MODIFIED FOR FIRE AND SOUND, SEE F.S.1/A-602
07.04	BATT INSULATION
07.08	NEW ROOF
08.02	WINDOW - SEE FLOOR PLAN
09.02	4" WALL BASE (PER SCHEDULE)
09.06	VINYL FLOORING

THESE DRAWINGS AND SPECIFICATIONS ARE THE PROPERTY AND COPYRIGHT OF LAUTERBACH & ASSOCIATES. ALL RIGHTS RESERVED AND SHALL NOT BE USED ON ANY OTHER WORK OR PROJECT EXCEPT BY WRITTEN AGREEMENT WITH LAUTERBACH & ASSOCIATES. WRITTEN DIMENSIONS SHALL TAKE PRECEDENCE OVER SCALED DIMENSIONS AND SHALL BE VERIFIED ON THE JOB SITE. ANY DISCREPANCY SHALL BE BROUGHT TO THE NOTICE OF LAUTERBACH & ASSOCIATES PRIOR TO COMMENCEMENT OF ANY WORK.

LAUTERBACH & ASSOCIATES
ARCHITECTS INC.
David C. Kesterson, Architect • Ilona Scott, Architect • Mark S. Pettit, Architect
300 MONTGOMERY AVENUE, OXNARD, CALIFORNIA 93036 | 805-988-0912 | FAX 805-981-4510 | www.la-arch.com

LICENSED ARCHITECT
ILONA SCOTT
No. C11881
Ren. 06/21
STATE OF CALIFORNIA

CONCORD DRIVE APARTMENTS

2950 & 2956 CONCORD DRIVE
OXNARD, CA, 93036

CITY OF OXNARD HOUSING AUTHORITY

435 S. D STREET
OXNARD, CALIFORNIA 93030

NO	DESCRIPTION	DATE
1	PLAN CHECK SUBMITTAL	07/31/2020

ISSUE

JOB NO.	20-190209
DRAWN BY:	TJL
CHECKED BY:	ISS
PROJECT MANAGER:	ISS
PRINT DATE:	8/11/2020 11:26:36 AM

BUILDING SECTIONS

A-301

G:\2019 Projects\20-190708 City of Oxnard-Set-4-Concord\Drawings\Architectural\2950 & 2956 Concord Drive - CD (Floor Plans).rvt

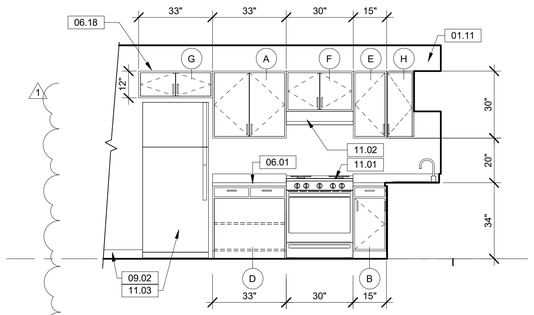

3 KITCHEN 101 (ACCESSIBLE)
3/8" = 1'-0"

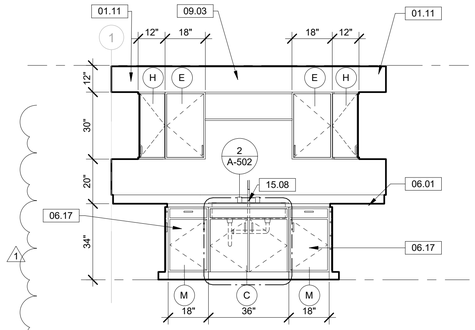

2 KITCHEN 101 (ACCESSIBLE)
3/8" = 1'-0"

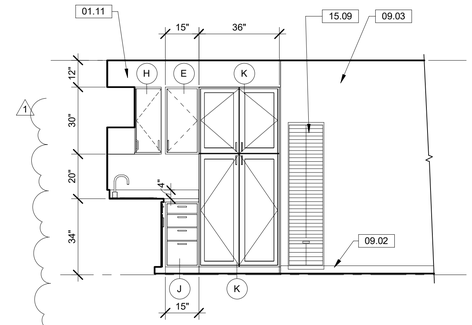

1 KITCHEN 101 (ACCESSIBLE)
3/8" = 1'-0"

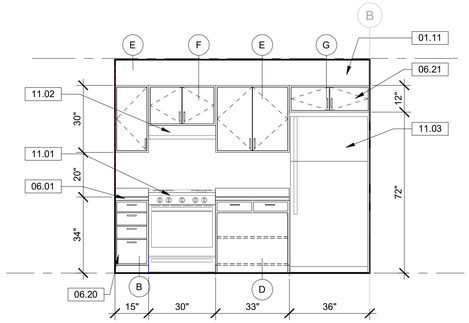

5 KITCHEN 108
3/8" = 1'-0"

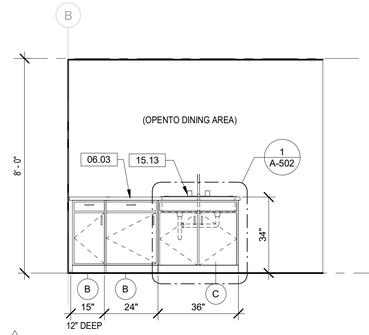

4 KITCHEN 108
3/8" = 1'-0"

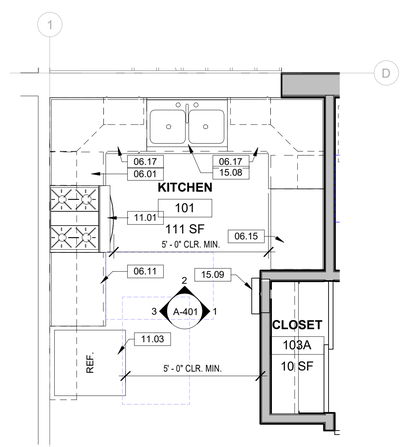

7 FLOOR PLAN - KITCHEN 101 (ACCESSIBLE)
3/8" = 1'-0"
0 2' 4' 6'

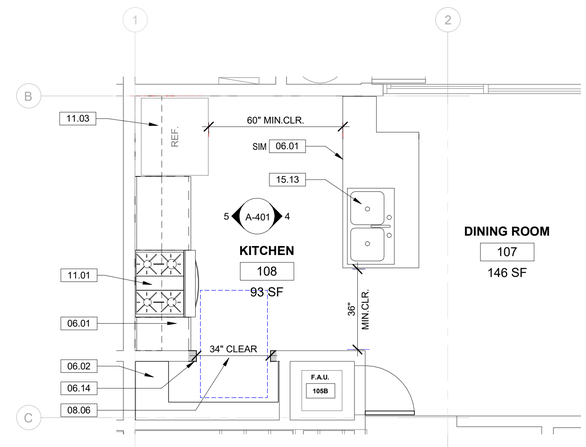

6 FLOOR PLAN - KITCHEN 108 (ADAPTABLE)
3/8" = 1'-0"
0 2' 4' 6'

KEYNOTES - EXISTING TO REMAIN

KEYNOTES

01.11	OPEN TO WALL ABOVE CABINETS
06.01	24" COUNTERTOP WITH 4" BACKSPLASH
06.02	SHELF AT PANTRY (4 SHELVES) 16"d. AT END, 8"D. AT BACK
06.03	ISLAND COUNTER TOP
06.11	UPPER CABINETS WITH ADJUSTABLE SHELVES
06.14	PATCH AND REPAIR JAMB AT EXISTING WALL
06.15	TALL CABINET
06.17	BASE CABINET WITH EXTENDED SHELVING TO CORNER
06.18	SAFETY TRIM AT UPPER CABINET, TYP.
06.20	BASE CABINET
06.21	UPPER CABINET
08.06	CASED OPENING, WOOD JAMB AND TRIM, MATCH EXISTING
09.02	4" WALL BASE (PER SCHEDULE)
09.03	GYPSUM BOARD, PAINTED
11.01	RANGE/ OVEN
11.02	RANGE HOOD
11.03	REFRIGERATOR
15.08	ACCESSIBLE KITCHEN SINK WITH PROTECTIVE INSULATED COVER FOR DRAIN PIPE, FAUCET TO BE ACCESSIBLE - REFER TO 2/A-502
15.09	WALL MOUNTED HEATER, REFER TO MECHANICAL PLANS
15.13	KITCHEN SINK

CASEWORK SCHEDULE

MARK	TYPE	DEPTH
A	UPPER - DOUBLE DOOR	1' - 0"
B	BASE - SINGLE DOOR WITH DRAWER	2' - 0"
C	BASE - SINK WITH REMOVABLE BASE AND DOORS	2' - 0"
D	BASE - WORKSPACE WITH REMOVABLE BASE AND SHELF	2' - 0"
E	UPPER - SINGLE DOOR	1' - 0"
F	UPPER - DOUBLE DOOR ABOVE STOVE/OVEN	1' - 0"
G	UPPER - DOUBLE DOOR ABOVE REFRIGERATOR	1' - 0"
H	UPPER - CORNER UNIT	1' - 0"
J	BASE - DRAWERS	2' - 0"
K	TALL CABINET - 4 DOOR	2' - 0"
M	BASE - SINGLE DOOR WITH DRAWER AND EXTENDED SHELVES	2' - 0"

GENERAL NOTES

1. PROVIDE SHOP DRAWINGS FOR CASEWORK.
2. THERE SHALL BE NO SHARP OR ABRASIVE SURFACES UNDER THE SINK.
3. FOR APPLIANCES SEE APPLIANCE SCHEDULE ON SHEET A-601
4. FOR ADDITIONAL REQUIRED CLEARANCES AND HEIGHT DIMENSIONS TO CONFORM WITH ACCESSIBILITY REQUIREMENTS SEE SHEET A-502.

LAUTERBACH & ASSOCIATES
ARCHITECTS INC.
David C. Kesterson, Architect • Ilona Scott, Architect • Mark S. Pettit, Architect
300 MONTGOMERY AVENUE, OXNARD, CALIFORNIA 93036 | 805-988-0912 | FAX 805-981-4510 | www.la-arch.com

LICENSED ARCHITECT ILONA SCOTT No. C11881 Ren. 06/21 STATE OF CALIFORNIA

CONCORD DRIVE APARTMENTS

2950 & 2956 CONCORD DRIVE
OXNARD, CA, 93036

CITY OF OXNARD HOUSING AUTHORITY

435 S. D STREET
OXNARD, CALIFORNIA 93030

NO	DESCRIPTION	DATE
1	PLAN CHECK SUBMITTAL	07/31/2020

ISSUE

JOB NO. 20-190209

DRAWN BY: TJL
CHECKED BY: ISS
PROJECT MANAGER: ISS
PRINT DATE: 8/10/2020 8:54:55 AM

LSV - KITCHENS

A-401

THESE DRAWINGS AND SPECIFICATIONS ARE THE PROPERTY AND COPYRIGHT OF LAUTERBACH & ASSOCIATES. ALL RIGHTS RESERVED, AND SHALL NOT BE USED ON ANY OTHER WORK OR PROJECT EXCEPT BY WRITTEN AGREEMENT WITH LAUTERBACH & ASSOCIATES. WRITTEN DIMENSIONS SHALL TAKE PRECEDENCE OVER SCALED DIMENSIONS AND SHALL BE VERIFIED ON THE JOB SITE. ANY DISCREPANCY SHALL BE BROUGHT TO THE NOTICE OF LAUTERBACH & ASSOCIATES PRIOR TO COMMENCEMENT OF ANY WORK.

G:\2019 Projects\20-190708 City of Oxnard Set 4-Concord\Drawings\Architectural\2950 & 2956 Concord Drive - CD (Floor Plans).rvt

KEYNOTES

01.02	30"x48" CLEAR SPACE
01.13	"T" TURN-AROUND SPACE
01.14	36"x60" CLEAR TOILET SPACE, PER 11B 604.3.1 EXCEPTION
06.05	SOFFIT ABOVE (DUCT FOR DRYER AND FAN)
06.23	SOLID BLOCKING AT WALL FRAMING (GRAB BAR MOUNTING)
09.02	4" WALL BASE (PER SCHEDULE)
09.03	GYPSUM BOARD, PAINTED
10.01	42" GRAB BAR
10.02	36" GRAB BAR
10.03	MEDICINE CABINET
10.05	TOWEL RING
10.07	TOILET TISSUE HOLDER
10.09	CURTAIN ROD
10.10	TUB ENCLOSURE
15.03	WATER CLOSET
15.14	SHOWER CONTROL AREA

CASEWORK SCHEDULE

MARK	TYPE	DEPTH
A	UPPER - DOUBLE DOOR	1' - 0"
B	BASE - SINGLE DOOR WITH DRAWER	2' - 0"
C	BASE - SINK WITH REMOVABLE BASE AND DOORS	2' - 0"
D	BASE - WORKSPACE WITH REMOVABLE BASE AND SHELF	2' - 0"
E	UPPER - SINGLE DOOR	1' - 0"
F	UPPER - DOUBLE DOOR ABOVE STOVE/OVEN	1' - 0"
G	UPPER - DOUBLE DOOR ABOVE REFRIGERATOR	1' - 0"
H	UPPER - CORNER UNIT	1' - 0"
J	BASE - DRAWERS	2' - 0"
K	TALL CABINET - 4 DOOR	2' - 0"
M	BASE - SINGLE DOOR WITH DRAWER AND EXTENDED SHELVES	2' - 0"

GENERAL NOTES

1. PROVIDE SHOP DRAWINGS FOR CASEWORK.
2. THERE SHALL BE NO SHARP OR ABRASIVE SURFACES UNDER THE SINK.
3. FOR APPLIANCES SEE APPLIANCE SCHEDULE ON SHEET A-601
4. FOR ADDITIONAL REQUIRED CLEARANCES AND HEIGHT DIMENSIONS TO CONFORM WITH ACCESSIBILITY REQUIREMENTS SEE SHEET A-502.

LEGEND

(A) CASEWORK PER PLANS AND SCHEDULE ON SHEET A-602

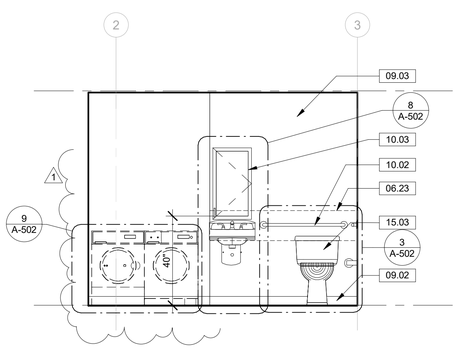

1 ELEVATION - ACCESSIBLE BATHROOM
3/8" = 1'-0"

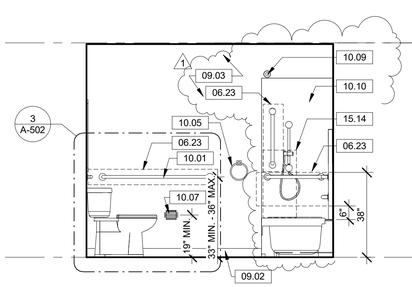

2 ELEVATION - ACCESSIBLE BATHROOM
3/8" = 1'-0"

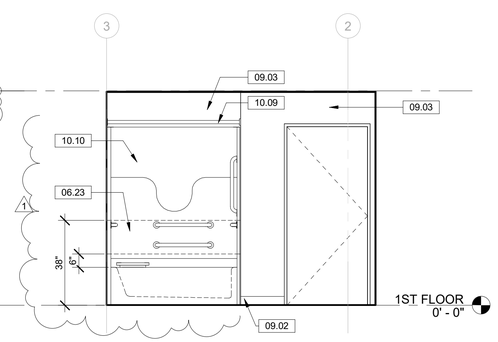

3 ELEVATION - ACCESSIBLE BATHROOM
3/8" = 1'-0"

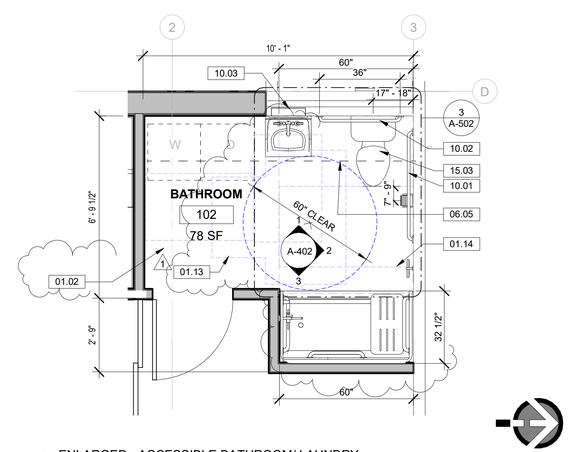

4 ENLARGED - ACCESSIBLE BATHROOM/ LAUNDRY
3/8" = 1'-0"

0 2" 4' 6'

LAUTERBACH & ASSOCIATES
ARCHITECTS INC.
David C. Kesterson, Architect • Ilona Scott, Architect • Mark S. Pettit, Architect
300 MONTGOMERY AVENUE, OXNARD, CALIFORNIA 93036 | 805-988-0912 | FAX 805-981-4510 | www.la-arch.com

LICENSED ARCHITECT
ILONA SCOTT
No. C11881
Ren. 06/21
STATE OF CALIFORNIA

CONCORD DRIVE APARTMENTS

2950 & 2956 CONCORD DRIVE
OXNARD, CA, 93036

CITY OF OXNARD HOUSING AUTHORITY

435 S. D STREET
OXNARD, CALIFORNIA 93030

NO	DESCRIPTION	DATE
1	PLAN CHECK SUBMITTAL	07/31/2020

ISSUE

JOB NO. 20-190209

DRAWN BY: TJL
CHECKED BY: ISS
PROJECT MANAGER: ISS
PRINT DATE: 8/14/2020 2:46:52 PM

LSV - BATHROOM

A-402

THESE DRAWINGS AND SPECIFICATIONS ARE THE PROPERTY AND COPYRIGHT OF LAUTERBACH & ASSOCIATES. ALL RIGHTS RESERVED AND SHALL NOT BE USED ON ANY OTHER WORK OR PROJECT EXCEPT BY WRITTEN AGREEMENT WITH LAUTERBACH & ASSOCIATES. WRITTEN DIMENSIONS SHALL TAKE PRECEDENCE OVER SCALED DIMENSIONS AND SHALL BE VERIFIED ON THE JOB SITE. ANY DISCREPANCY SHALL BE BROUGHT TO THE NOTICE OF LAUTERBACH & ASSOCIATES PRIOR TO COMMENCEMENT OF ANY WORK.

G:\2019 Projects\20-190708 City of Oxnard Set 4-Concord\Drawings\Architectural\2950 & 2956 Concord Drive - CD (Floor Plans)\.rvt

INTERNATIONAL SYMBOL OF ACCESSIBILITY

PAINTED FIELD:
BLUE TRAFFIC PAINT
3'-0" SQUARE WITH
3" RADIUS CORNERS

PAINTED SYMBOL:
WHITE TRAFFIC PAINT
MIN. 3" WIDE STRIPING

5 ACCESS - Symbol of Accessiblity
3/4" = 1'-0"

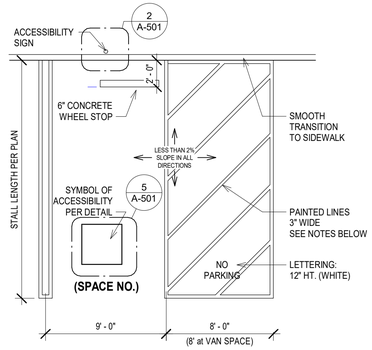

NOTE: ACCESS COMPLAINT STALLS TO BE STRIPED WITH BLUE PAINT

4 ACCESS - Parking Stall - Van
3/16" = 1'-0"

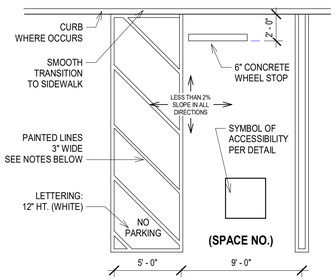

NOTE: ACCESS COMPLAINT STALLS TO BE STRIPED WITH BLUE PAINT

3 ACCESS - Parking Stall - Standard
3/16" = 1'-0"

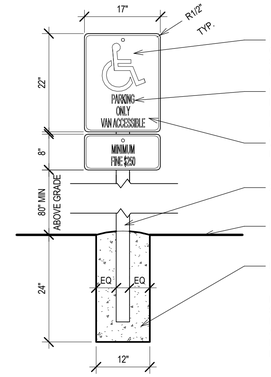

REFLECTORIZED SIGN CONSTRUCTED OF PORCELAIN STEEL WITH BEADED TEXT OR EQUAL

LETTERING ON SIGN MUST BE MIN. 1" IN HEIGHT. DESIGNATE FOR 'VAN ACCESSIBLE' WHERE REQ'D.

WHITE SYMBOL / LETTERS ON BLUE BACKGROUND

2"Ø STEEL TUBE

FINISH GRADE OR TOP OF AC PAVING

DEEP CONCRETE FOOTING

NOTE:
SIGN TO BE CENTERED AT THE INTERIOR END OF PARKING SPACE. AREA OF SIGN TO BE 70 SQ. IN. MIN. FOR SIGN MOUNTED ON WALL 36" MIN. ABOVE FINISH GRADE

SIGNAGE PER 2013 C.B.C 11B-502.8.1 and 2

2 ACCESS - parking stall sign
3/4" = 1'-0"

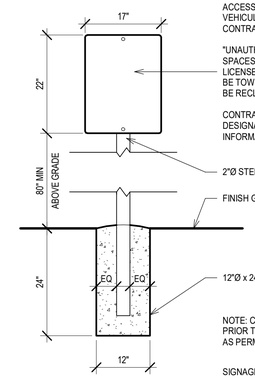

ACCESSIBLE WARNING SIGNAGE TO BE POSTED AT ALL VEHICULAR ENTRANCES, WITH MIN 1" LETTERING ON CONTRASTING BACKGROUND TO READ:

"UNAUTHORIZED VEHICLES PARKED IN DESIGNATED ACCESSIBLE SPACES NOT DISPLAYING DISTINGUISHING PLACARDS OR SPECIAL LICENSE PLATES ISSUED FOR PERSONS WITH DISABILITIES WILL BE TOWED AWAY AT OWNER'S EXPENSE. TOWED VEHICLES MAY BE RECLAIMED AT ..... OR BY TELEPHONING ....."

CONTRACTOR TO VERIFY WITH JUURISDICTION TO OBTAIN LOCAL DESIGNATED TOWING SERVICE INFOMATION, AND INCLUDE THIS INFORMATION ON SIGN

2"Ø STEEL TUBE

FINISH GRADE OR TOP OF AC PAVING

12"Ø x 24" DEEP CONCRETE FOOTING

NOTE: CONTRACTOR TO VERIFY INFORMATION PRIOR TO FABRICATION AND TO BE COMPLETED AS PERMANENT SIGN.

SIGNAGE PER 2013 C.B.C 11B-502.8.1 and 2

1 ACCESS - parking lot entrance
3/4" = 1'-0"

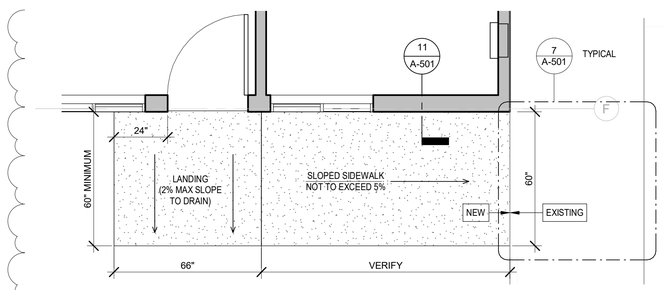

8 ENLARGED RAMP AT ACCESSIBLE APARTMENT ENTRANCE
3/8" = 1'-0"

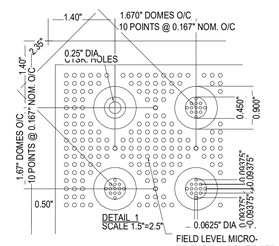

FIELD LEVEL MICRO-TEXTURE 41 POINTS PER SQUARE INCH

APPLY ARMOR-SEAL (PART NO. ADA-S125) PERIMETER SEALANT AT PERIMETER OF TILE AFTER INSTALLING FASTENERS. TOOL SMOOTH TO BLEND TILE EDGE WITH ADJACENT SURFACE

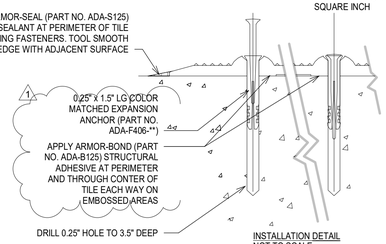

INSTALLATION DETAIL
NOT TO SCALE

9 ACCESS - truncated dome paver
1" = 1'-0"

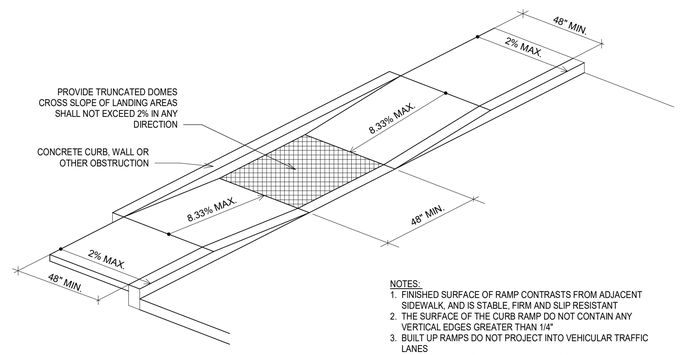

NOTES:
1. FINISHED SURFACE OF RAMP CONTRASTS FROM ADJACENT SIDEWALK, AND IS STABLE, FIRM AND SLIP RESISTANT
2. THE SURFACE OF THE CURB RAMP DO NOT CONTAIN ANY VERTICAL EDGES GREATER THAN 1/4"
3. BUILT UP RAMPS DO NOT PROJECT INTO VEHICULAR TRAFFIC LANES
4. TRANSITIONS FROM RAMP(S) TO WALKS, GUTTERS OR STREETS ARE FLUSH AND FREE OF ABRUPT CHANGES.

6 ACCESS - curb ramp
1/4" = 1'-0"

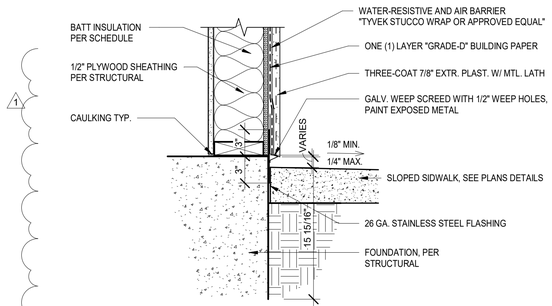

11 WALL BASE AT SLOPED SIDEWALK
1 1/2" = 1'-0"

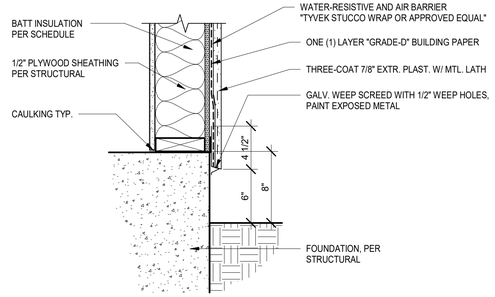

10 WALL BASE AT ADDITION
1 1/2" = 1'-0"

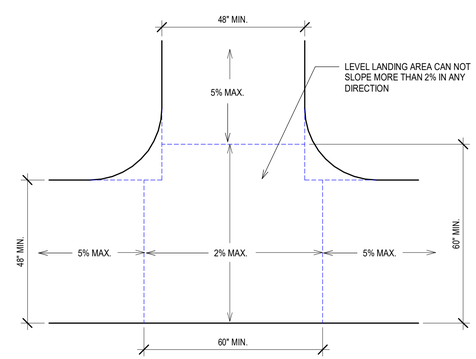

7 ACCESS - landing at walkway intersection
1/2" = 1'-0"

LAUTERBACH & ASSOCIATES
ARCHITECTS INC.
David C. Kesterson, Architect • Ilona Scott, Architect • Mark S. Pettit, Architect
300 MONTGOMERY AVENUE, OXNARD, CALIFORNIA 93036 | 805-988-0912 | FAX 805-981-4510 | www.la-arch.com

LICENSED ARCHITECT ILONA SCOTT No. C11881 Ren. 06/21 STATE OF CALIFORNIA

CONCORD DRIVE APARTMENTS

2950 & 2956 CONCORD DRIVE
OXNARD, CA, 93036

CITY OF OXNARD HOUSING AUTHORITY

435 S. D STREET
OXNARD, CALIFORNIA 93030

NO	DESCRIPTION	DATE
1	PLAN CHECK SUBMITTAL	07/31/2020

ISSUE

JOB NO. 20-190209

DRAWN BY: TJL
CHECKED BY: ISS
PROJECT MANAGER: ISS
PRINT DATE: 8/12/2020 8:22:10 AM

SITE DETAILS

A-501

THESE DRAWINGS AND SPECIFICATIONS ARE THE PROPERTY AND COPYRIGHT OF LAUTERBACH & ASSOCIATES. ALL RIGHTS RESERVED, AND SHALL NOT BE USED ON ANY OTHER WORK OR PROJECT EXCEPT BY WRITTEN AGREEMENT WITH LAUTERBACH & ASSOCIATES. WRITTEN DIMENSIONS SHALL TAKE PRECEDENCE OVER SCALED DIMENSIONS AND SHALL BE VERIFIED ON THE JOB SITE. ANY DISCREPANCY SHALL BE BROUGHT TO THE NOTICE OF LAUTERBACH & ASSOCIATES PRIOR TO COMMENCEMENT OF ANY WORK.

G:\2019 Projects\20-190708 City of Oxnard Set 4-Concord\Drawings\Architectural\2950 & 2956 Concord Drive - CD (Floor Plans).rvt

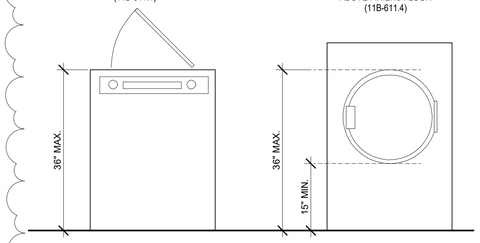

9 ACCESS - W&D Elevation
3/4" = 1'-0"

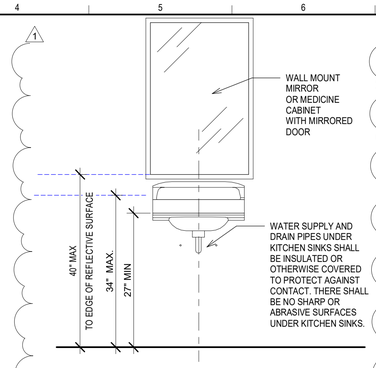

8 ACCESS - LAV WITH MIRROR
3/4" = 1'-0"

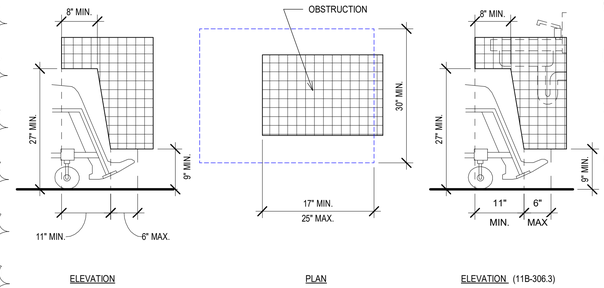

2 KNEE AND TOE CLEARANCE
3/4" = 1'-0"

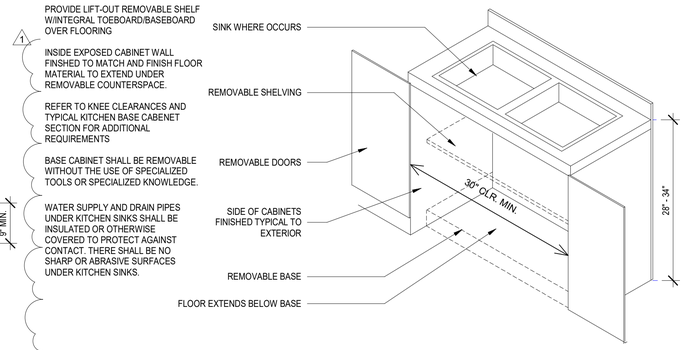

1 BASE CABINET AT SINK AND WORKSPACE
3/4" = 1'-0"

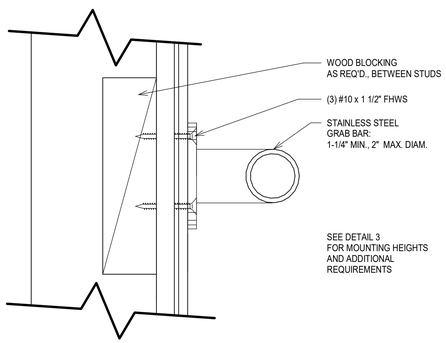

4 ACCESS - grab bar mounting
6" = 1'-0"

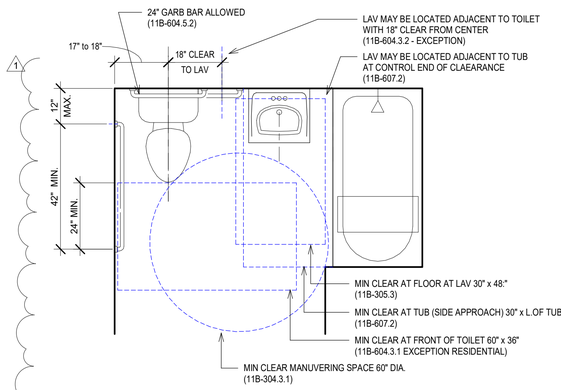

MINIMUM CLEARANCES AND ALLOWABLE ADJACENCIES - SEE FLOOR PLAN FOR SPECIFIC LAYOUT

3 ACCESS - RESIDENTIAL BATH REQUIREMENTS (11B) 2
1/2" = 1'-0"

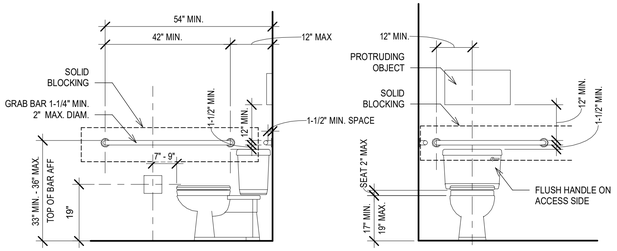

1. CONSTRUCTION MUST COMPLY WITH CALIFORNIA TITLE 24 REQUIREMENTS
2. THE REQUIRED CLEARANCE AROUND THE WATER CLOSET SHALL BE PERMITTED TO OVERLAP THE WATER CLOSET, ASSOCIATED GRAB BARS, DISPENSERS, SANITARY NAPKIN DISPOSAL UNITS, COAT HOOKS, SHELVES, ACCESSIBLE ROUTES, CLEAR FLOOR SPACE AND CLEARANCES REQUIRED AT OTHER FIXTURES, AND THE TURNING SPACE. NO OTHER FIXTURES OR OBSTRUCTIONS SHALL BE LOCATED WITHIN THE REQUIRED WATER CLOSET CLEARANCE.
3. SEATS SHALL NOT BE SPRUNG TO RETURN TO A LIFTED POSITION
4. THE REAR GRAB BAR SHALL BE PERMITTED TO BE 24 INCHES LONG MINIMUM, CENTERED ON THE WATER CLOSET, WHERE WALL SPACE DOES NOT PERMIT A LENGTH OF 36 INCHES MINIMUM DUE TO THE LOCATION OF A RECESSED FIXTURE ADJACENT TO THE WATER CLOSET.
5. FLUSH CONTROLS SHALL BE HAND OPERATED OR AUTOMATIC. CONTROLS SHALL BE LOCATED 44 INCHES MAXIMUM ABOVE THE FLOOR.
6. TOILET PAPER DISPENSERS SHALL NOT BE OF A TYPE THAT CONTROLS DELIVERY OR THAT DOES NOT ALLOW CONTINUOUS PAPER FLOW.
7. WATER SUPPLY AND DRAIN PIPES UNDER SINKS SHALL BE INSULATED OR OTHERWISE COVERED TO PROTECT AGAINST CONTACT. THERE SHALL BE NO SHARP OR ABRASIVE SURFACES UNDER KITHECN SINKS.

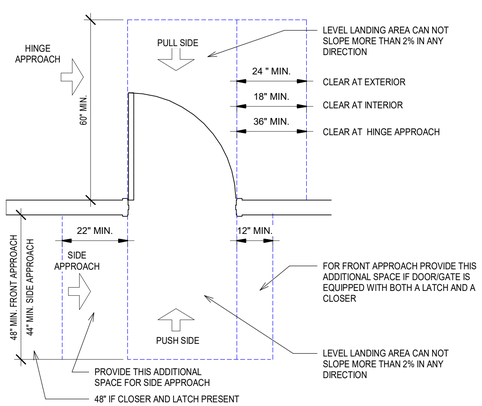

7 ACCESS - door clearances
1/2" = 1'-0"

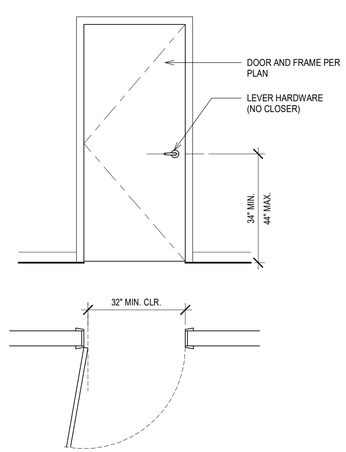

6 ACCESS - interior door clearances
1/2" = 1'-0"

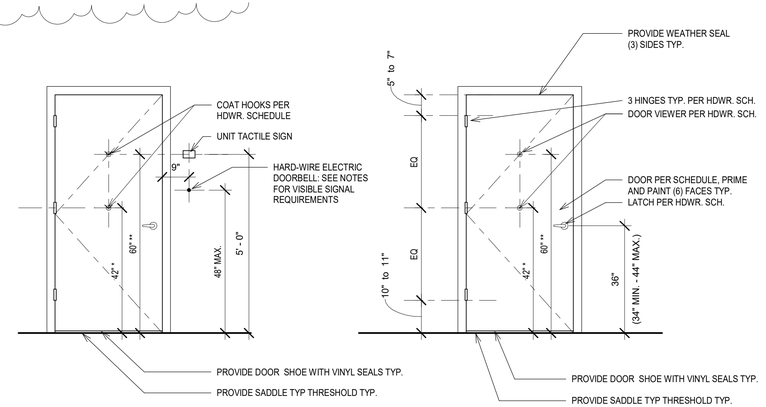

DOOR VIEWERS:
* HEIGHT FOR ACCESSIBLE UNITS
** PROVIDE BOTH HIGH AND LOW IN ACCESSIBLE UNITS
** TYPICAL HEIGHT FOR NON ACCESSIBLE UNITS

5 DOOR - typical door requirements
1/2" = 1'-0"

GENERAL NOTES:

1. HARDWARE. DOOR HANDLES, PULLS, LATCHE3S, LOCKS AND OTHER OPERATING DEVICES ON DOORS REQUIRED TO BE ACCESSIBLE SHALL NOT REQUIRE TIGHT GRASPING TIGHT PINCHING OR TWISTING OF THE WRIST TO OPERATE. (1008.1.9.1)
2. DOOR CLOSERS AND GATE CLOSERS SHALL BE ADJUSTED SO THAT FROM AN OPEN POSITION OF 90 DEGREES, THE TIME REQUIRED TO MOVE THE DOOR TO A POSITION OF 12 DEGREES FROM THE LATCH IS 5 SECONDS MINIMUM. (11B-404.2.8)
3. DOOR AND GATE SPRING HINGES SHALL BE ADJUSTED SO THAT FROM THE OPEN POSITION OF 70 DEGREES, THE DOOR OR GATE SHALL MOVE TO THE CLOSED POSITION IN 1.5 SECONDS MINIMUM.
4. THE FORCE FOR PUSHING OR PULLING A OPEN DOOR OR GATE OTHER THAN A FIRE DOOR SHALL BE AS FOLLOWS:
   a. INTERIOR HINGED DOORS AND GATES: 5 POUNDS MAXIMUM.
   b. SLIDING OR FOLDING DOORS: 5 POUNDS MAXIMUM.
   c. REQUIRED FIRE DOORS: THE MINIMUM OPENING FORCE ALLOWABLE BY THE APPROPRIATE ADMINISTRATIVE AUTHORITY, NOT TO EXCEED 15 POUNDS
   d. EXTERIOR HINGED DOORS: 5 POUNDS MAXIMUM
5. SWING DOOR AND GATE SURFACES WITHIN 10 INCHES OF THE FINISH FLOOR OR GROUND MEASURED VERTICALLY SHALL HAVE A SMOOTH SURFACE ON THE PUSH SIDE EXTENDING THE FULL WIDTH OF THE DOOR OR GATE. PARTS CREATING HORIZONTAL OR VERTICAL JOINTS IN THESE SURFACES SHALL BE WITHIN 1/16 INCH OF THE SAME PLANE AS THE OTHER AND BE FREE OF SHARP OR ABRASIVE EDGES. CAVITIES CREATED BY ADDED KICK PLATES SHALL BE CAPPED.
6. DOORS, GATES, AND SIDE LIGHTS ADJACENT TO DOORS OR GAT4ES, CONTAINING ONE OR MORE GLAZING PANELS THAT PERMIT VIEWING THROUGH THE PANELS SHALL HAVE THE BOTTOM OF AT LEAST ONE GLAZED PANEL LOCATED 43 INCHES MAXIMUM ABOVE THE FINISH FLOOR.
   a. EXCEPTION: GLAZING PANELS WITH THE LOWEST PART MORE THAN 66 INCHES FROM THE FINISH FLOOR OR GROUND SHALL NOT BE REQUIRED TO COMPLY.
7. DOORWAYS SHALL PROVIDE A CLEAR OPENING OF 32 INCHE3S MINIMUM IN POWER-ON AND POWER-OFF MODE. THE MINIMUM CLEAR WIDTH FOR AUTOMATIC DOOR SYSTEMS IN A DOORWAY SHALL PROVIDE A CLEAR, UNOBSTRUCTED OPENING OF 32 INCHES WITH ONE LEAF POSITIONED AT AN ANGLE OF 90 DEGREES FROM ITS CLOSED POSITION.

LAUTERBACH & ASSOCIATES
A R C H I T E C T S I N C.
David C. Kesterson, Architect • Ilona Scott, Architect • Mark S. Pettit, Architect
300 MONTGOMERY AVENUE, OXNARD, CALIFORNIA 93036 | 805-988-0912 | FAX 805-981-4510 | www.la-arch.com

LICENSED ARCHITECT ILONA SCOTT No. C11881 Ren. 06/21 STATE OF CALIFORNIA

CONCORD DRIVE APARTMENTS

2950 & 2956 CONCORD DRIVE
OXNARD, CA, 93036

CITY OF OXNARD HOUSING AUTHORITY

435 S. D STREET
OXNARD, CALIFORNIA 93030

NO	DESCRIPTION	DATE
1	PLAN CHECK SUBMITTAL	07/31/2020

ISSUE

JOB NO. 20-190209

DRAWN BY: TJL
CHECKED BY: ISS
PROJECT MANAGER: ISS
PRINT DATE: 8/14/2020 8:27:31 AM

ACCESSIBLE DETAILS

A-502

THESE DRAWINGS AND SPECIFICATIONS ARE THE PROPERTY AND COPYRIGHT OF LAUTERBACH & ASSOCIATES. ALL RIGHTS RESERVED AND SHALL NOT BE USED ON ANY OTHER WORK OR PROJECT EXCEPT BY WRITTEN AGREEMENT WITH LAUTERBACH & ASSOCIATES. WRITTEN DIMENSIONS SHALL TAKE PRECEDENCE OVER SCALED DIMENSIONS AND SHALL BE VERIFIED ON THE JOB SITE. ANY DISCREPANCY SHALL BE BROUGHT TO THE NOTICE OF LAUTERBACH & ASSOCIATES PRIOR TO COMMENCEMENT OF ANY WORK.

G:\2019 Projects\20-190108 City of Oxnard-Set 4-Concord\Drawings\Architectural\2950 & 2956 Concord Drive - CD (Floor Plans).rvt

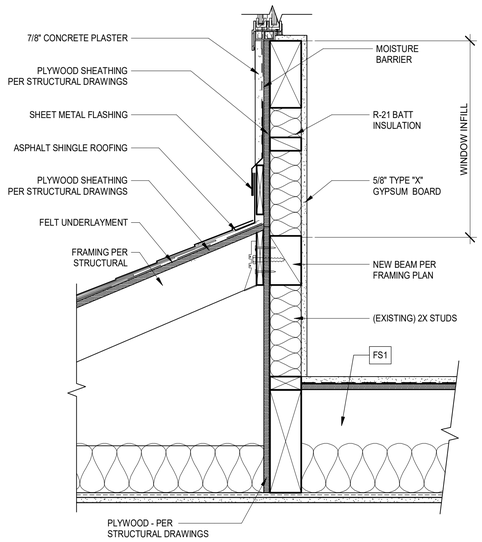

15 ROOF AT FIRST FLOOR ADDITION
1 1/2" = 1'-0"

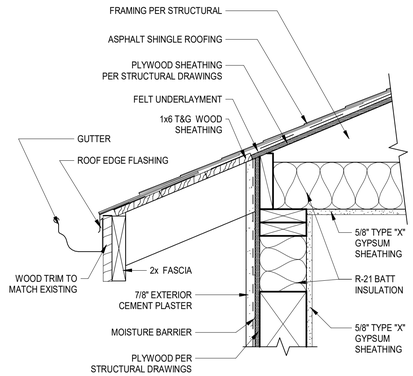

11 ROOF EAVE AT EXTERIOR NEW WALL
1 1/2" = 1'-0"

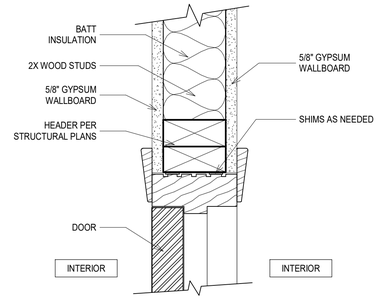

7 DOOR HEAD - INTERIOR
3" = 1'-0"

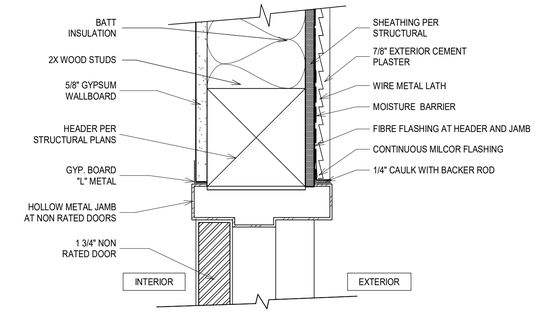

3 DOOR HEAD - EXTERIOR AT WATER HEATER ENCLOSURE
3" = 1'-0"

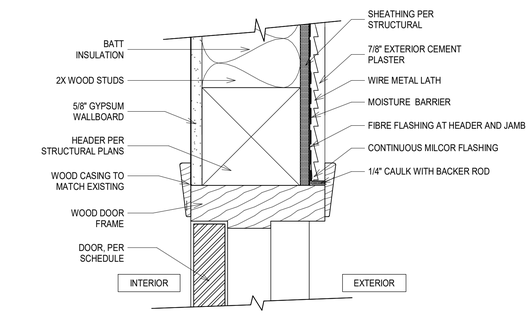

4 DOOR HEAD - EXTERIOR ENTRANCE
3" = 1'-0"

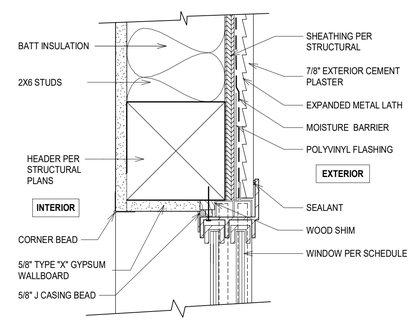

6 WINDOW HEAD - EXTERIOR CEMENT PLASTER
3" = 1'-0"

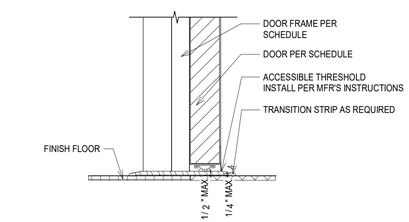

2 DOOR - INTERIOR ACCESSIBLE THRESHOLD
3" = 1'-0"

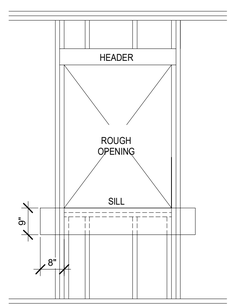

A

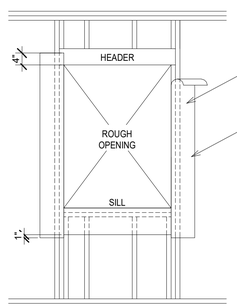

B

9" WIDE JAMB STRIPS WITH INSIDE EDGE OF FELT EVEN W/ EDGE OF OPENING

ASPHALT SATURATED ROOFING FELT

1. ATTACH FELT WITH GALV. ROOFING NAILS OR RUST- RESISTANT STAPLES - TYP.
2. AT WINDOW HEAD, JAMB AND SILLS, THE WINDOW FLANGE

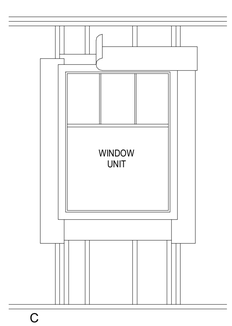

C

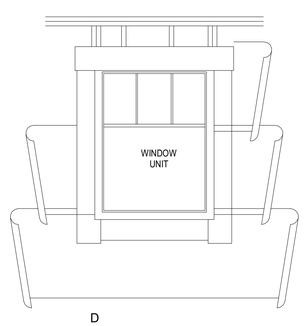

D

APPLY CAULK BEAD TO THE BACK SURFACE OF WINDOW. INSTALL OVER FELT STRIPS- INSTALL 9" WIDE FELT HEAD FLASHING OVER TOP FLANGE.

STARTING AT BOTTOM OF WALL LAY WATER RESISTANT PAPER UNDER THE SILL STRIP- INSTALL SUCCEEDING COURSES OF WATER-RESISTANT PAPER OVER SILL, JAMB, AND HEAD FLANGE IN SHINGLE FASHION W/ MIN. 2" OVERLAPS.

13 WINDOWS - TYPICAL FLASHINGS
1/2" = 1'-0"

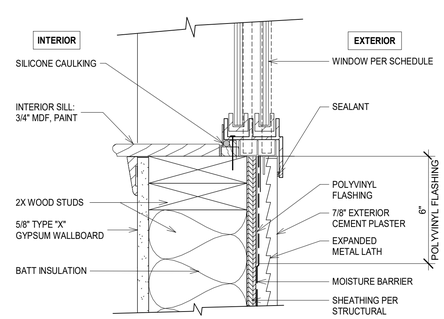

5 WINDOW SILL - EXTERIOR CEMENT PLASTER
3" = 1'-0"

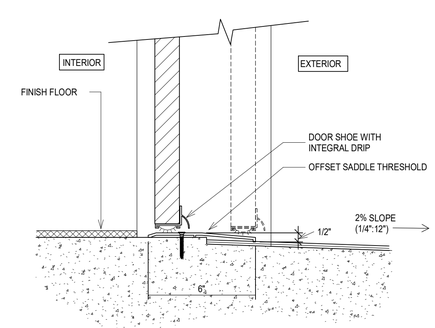

1 DOOR THRESHOLD - ACCESSIBLE (AT SLAB ON GRADE)
3" = 1'-0"

LAUTERBACH & ASSOCIATES
ARCHITECTS INC.
David C. Kesterson, Architect • Ilona Scott, Architect • Mark S. Pettit, Architect
300 MONTGOMERY AVENUE, OXNARD, CALIFORNIA 93036 | 805-988-0912 | FAX 805-981-4510 | www.la-arch.com

LICENSED ARCHITECT ILONA SCOTT No. C11881 Ren. 06/21 STATE OF CALIFORNIA

CONCORD DRIVE APARTMENTS

2950 & 2956 CONCORD DRIVE
OXNARD, CA, 93036

CITY OF OXNARD HOUSING AUTHORITY

435 S. D STREET
OXNARD, CALIFORNIA 93030

NO	DESCRIPTION	DATE

ISSUE

JOB NO. 20-190209

DRAWN BY: TJL
CHECKED BY: ISS
PROJECT MANAGER: ISS
PRINT DATE: 8/10/2020 8:55:32 AM

ROOF, DOOR & WINDOW DETAILS

A-503

THESE DRAWINGS AND SPECIFICATIONS ARE THE PROPERTY AND COPYRIGHT OF LAUTERBACH & ASSOCIATES. ALL RIGHTS RESERVED, AND SHALL NOT BE USED ON ANY OTHER WORK OR PROJECT EXCEPT BY WRITTEN AGREEMENT WITH LAUTERBACH & ASSOCIATES. WRITTEN DIMENSIONS SHALL TAKE PRECEDENCE OVER SCALED DIMENSIONS AND SHALL BE VERIFIED ON THE JOB SITE. ANY DISCREPANCY SHALL BE BROUGHT TO THE NOTICE OF LAUTERBACH & ASSOCIATES PRIOR TO COMMENCEMENT OF ANY WORK.

G:\2019 Projects\20-190708 City of Oxnard\Set 4-Concord\Drawings\Architectural\2950 & 2956 Concord Drive - CD (Floor Plans).rvt

DOOR SCHEDULE - RESIDENTIAL

ROOM	DOOR	WIDTH	HEIGHT	THICKNESS	TYPE	MATERIAL	FINISH	FRAME TYPE	COMMENTS
ENTRY - LIVING ROOM	100	3' - 0"	6' - 8"	0' - 1 3/4"	A	Wood	Paint	Wood	TO MATCH EXISTING UNIT DOORS
BATHROOM	102	3' - 0"	6' - 8"	0' - 1 3/4"	B	Wood	Paint	Wood	
BEDROOM	103	3' - 0"	6' - 8"	0' - 1 3/4"	B	Wood	Paint	Wood	
BEDROOM CLOSET	103A	4' - 11"	6' - 8"		C	Wood	Paint	Wood	
CLOSET	106	2' - 0"	6' - 8"	0' - 1 3/4"	B	Wood	Paint	Wood	
FURNACE	107A	1' - 10"	5' - 4"	0' - 1 3/4"	E	Wood	Paint	Wood	REPLACE DAMAGED DOOR AND HARDWARE
ENCLOSURE	112	3' - 0"	6' - 8"	0' - 1 3/4"	D	Metal	Paint	Metal	

WINDOW SCHEDULE

MARK	WIDTH	HEIGHT	Style	U-VALUE	SOLAR HEAT GAIN COEFFICIENT	Comments
A	3' - 10"	5' - 10"	Horizontal Sliding Window	0.3	0.23	NEW WINDOWS TO MATCH STYLE OF EXISTING (RETROFIT VINYL)
B	3' - 10"	4' - 0"	Horizontal Sliding Window	0.3	0.23	NEW IN EXISTING OPENINGS (RETROFIT VINYL)

ROOM FINISH SCHEDULE

NUMBER	NAME	AREA	FLOOR FINISH	BASE FINISH	WALL FINISH	CEILING FINISH	COMMENTS
100	LIVING ROOM	112 SF	SV.1		GB-Paint	GB-Paint	
101	KITCHEN	111 SF	SV.1		GB-Paint	GB-Paint	
102	BATHROOM	78 SF	SV.1		GB-Paint	GB-Paint	
103	BEDROOM	121 SF	SV.1		GB-Paint	GB-Paint	
103A	CLOSET	10 SF	SV.1		GB-Paint	GB-Paint	
104	ENTRY	30 SF	SV.1		GB-Paint	GB-Paint	
105	VESTIBULE	41 SF	SV.1		GB-Paint	GB-Paint	
105B	F.A.U.	5 SF			GB-Paint	GB-Paint	
106	CLOSET	5 SF	SV.1		GB-Paint	GB-Paint	
107	DINING ROOM	146 SF	SV.1		GB-Paint	GB-Paint	
108	KITCHEN	93 SF	SV.1		GB-Paint	GB-Paint	
110	LAUNDRY	55 SF	SV.1		GB-Paint	GB-Paint	
111	STAIR	43 SF			GB-Paint	GB-Paint	
112	HEATER ENCLOSURE	10 SF					
201	VESTIBULE	45 SF			GB-Paint	(E)	
202	BATHROOM	42 SF			(E)	(E)	(E) CLEAN AND PAINT ONLY
203	BEDROOM 2	118 SF			GB-Paint	(E)	
204	BEDROOM 1	139 SF			GB-Paint	(E)	
205	LIVING ROOM	245 SF	SV.1		GB-Paint	GB-Paint	

DOOR TYPES

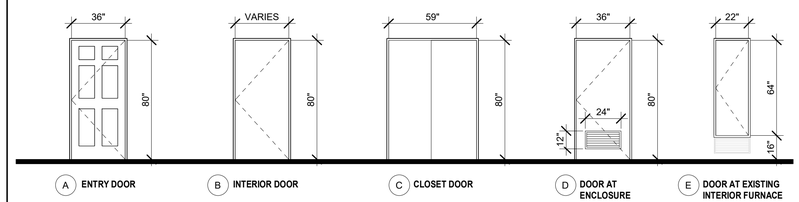

DOOR NOTES

***11B*-404.2.10 Door and gate surfaces.** Swinging door and gate surfaces within 10 inches (*254* mm) of the finish floor or ground measured vertically shall have a smooth surface on the push side extending the full width of the door or gate. Parts creating horizontal or vertical joints in these surfaces shall be within 1/16 inch (1.6 mm) of the same plane as the other *and be free of sharp or abrasive edges*. Cavities created
- by added kick plates shall be capped.
-

***11B*-404.2.9 Door and gate opening force.** The force for pushing or pulling open a door or gate shall be as follows:
1. Interior hinged doors and gates: 5 pounds (22.2 N) maximum.
2. Sliding or folding doors: 5 pounds (22.2 N) maximum.
3. Required fire doors: the minimum opening force allowable by the appropriate administrative authority, not to exceed 15 pounds (66.7 N).
- *4. Exterior hinged doors: 5 pounds (22.2 N) maximum.*

***11B*-404.2.7 Door and gate hardware.** Handles, pulls, latches, locks, and other operable parts on doors and gates shall comply with *Section 11B*-309.4. Operable parts of such hardware shall be 34 inches (*864* mm) minimum and *44 inches (1118 mm)* maximum above the finish floor or ground. Where sliding doors are in the fully open position, operating hardware shall be exposed and usable from both sides.

***11B*-309.4 Operation.** Operable parts shall be operable with one hand and shall not require tight grasping, pinching, or twisting of the wrist. The force required to activate operable parts shall be 5 pounds (22.2 N) maximum.

LEVER STYLE HARDWARE TO BE PROVIDED FOR ALL DOORS

WINDOW NOTES

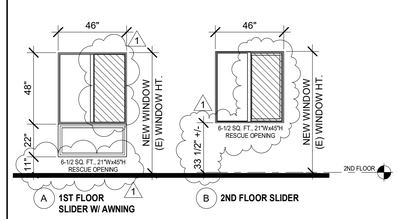

PER CBC 1030.2 : MINIMUM SIZE. EMERGENCY ESCAPE AND RESCUE OPENINGS SHALL HAVE A MINIMUM NET CLEAR OPENING OF 5.7 SQUARE FEET (0.53 M2).
EXCEPTION: THE MINIMUM NET CLEAR OPENING FOR GRADEFLOOR EMERGENCY ESCAPE AND RESCUE OPENINGS SHALL BE 5 SQUARE FEET (0.46 M2).

PER CBC 1030.2.1: MINIMUM DIMENSIONS. THE MINIMUM NET CLEAR OPENING HEIGHT DIMENSION SHALL BE 24 INCHES (610 MM). THE MINIMUM NET CLEAR OPENING WIDTH DIMENSION SHALL BE 20 INCHES (508 MM). THE NET CLEAR OPENING DIMENSIONS SHALL BE THE RESULT OF NORMAL OPERATION OF THE OPENING.

PER CBC 1030.3: MAXIMUM HEIGHT FROM FLOOR. EMERGENCY ESCAPE AND RESCUE OPENINGS SHALL HAVE THE BOTTOM OF THE CLEAR OPENING NOT GREATER THAN 44 INCHES (1118 MM) MEASURED FROM THE FLOOR.

RESCUE OPENING AREA

APPLIANCE AND FIXTURE SCHEDULE

ALL APPLIANCES ARE ACCESS COMPLIANT ("ADA")
ALL APPLIANCES ARE ENERGY STAR RATED

KITCHEN
- REFRIGERATOR : FRIGIDAIRE, FFHT1821 S/W/B (18 CU.FT.)
- STOVE /OVEN : WHIRLPOOL, WEWEG515SOFS
- SINK: AMERICAN STANDARD 24DB.332284.290 (DOUBLE BOWL STAINLESS STL.)
- FAUCET: DELTA 100LF-WF

BATH
- FIBERGLASS TUB-SHOWER : FREEDOM BATHTUBS, APTG3260TSADA
- TUB/SHOWER FIXTURE: SYMMONS ORIGINS 9604-PLR
- TOILET - AMERICAN STANDARD ACCESS PRO, 215AG.107RS
- WALL MOUNT LAV: AMERICAN STANDARD, MURRO
- WALL MOUNT LAV: AMERICAN STANDARD LUCERN 0356.028.020
- DROP-IN LAV: AMERICAN STANDARD, AQUALYN, 0476.028
- FAUCET: SYMMONS, SYMMETRIX, S-20 SERIES

LAUTERBACH & ASSOCIATES
ARCHITECTS INC.
David C. Kesterson, Architect • Ilona Scott, Architect • Mark S. Pettit, Architect
300 MONTGOMERY AVENUE, OXNARD, CALIFORNIA 93036 | 805-988-0912 | FAX 805-981-4510 | www.la-arch.com

LICENSED ARCHITECT ILONA SCOTT No. C11881 Ren. 06/21 STATE OF CALIFORNIA

CONCORD DRIVE APARTMENTS

2950 & 2956 CONCORD DRIVE
OXNARD, CA, 93036

CITY OF OXNARD HOUSING AUTHORITY

435 S. D STREET
OXNARD, CALIFORNIA 93030

NO	DESCRIPTION	DATE
1	PLAN CHECK SUBMITTAL	07/31/2020

ISSUE

JOB NO. 20-190209

DRAWN BY: TJL
CHECKED BY: ISS
PROJECT MANAGER: ISS
PRINT DATE: 8/12/2020 8:22:33 AM

SCHEDULES

A-601

THESE DRAWINGS AND SPECIFICATIONS ARE THE PROPERTY AND COPYRIGHT OF LAUTERBACH & ASSOCIATES. ALL RIGHTS RESERVED. AND SHALL NOT BE USED ON ANY OTHER WORK OR PROJECT EXCEPT BY WRITTEN AGREEMENT WITH LAUTERBACH & ASSOCIATES. WRITTEN DIMENSIONS SHALL TAKE PRECEDENCE OVER SCALED DIMENSIONS AND SHALL BE VERIFIED ON THE JOB SITE. ANY DISCREPANCY SHALL BE BROUGHT TO THE NOTICE OF LAUTERBACH & ASSOCIATES PRIOR TO COMMENCEMENT OF ANY WORK.

G:\2019 Projects\20-190708 City of Oxnard Set 4-Concord\Drawings\Architectural\2950 & 2956 Concord Drive - CD [Floor Plans]\rvt

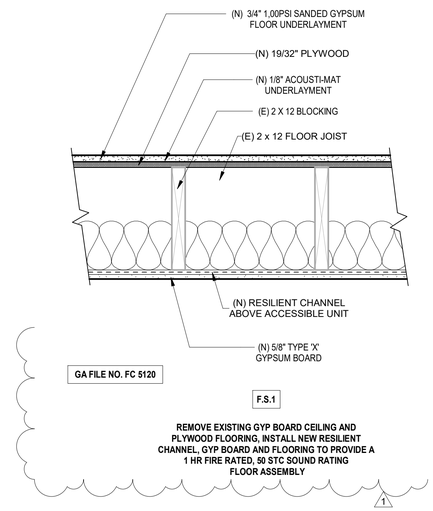

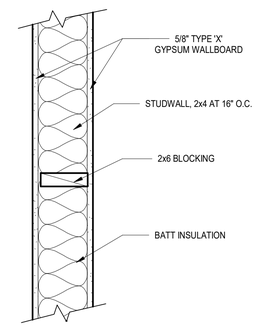

NEW INTERIOR 2x6 WALL AT WATER HEATER

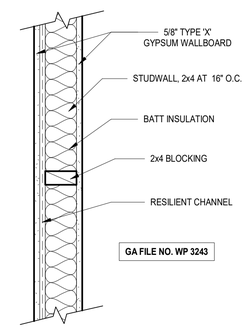

NEW INTERIOR 2x4 1 HOUR STC 50 SOUND RATED WALL

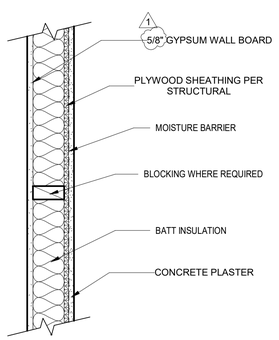

NEW EXTERIOR 2x4 WALL

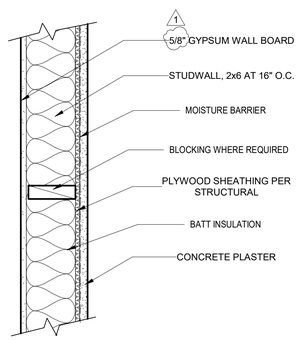

NEW EXTERIOR 2x6 WALL

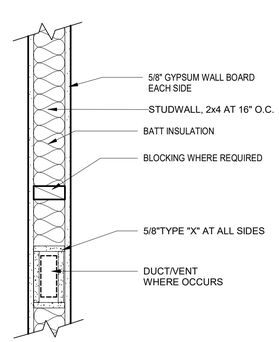

NEW INTERIOR 2x4 WALL

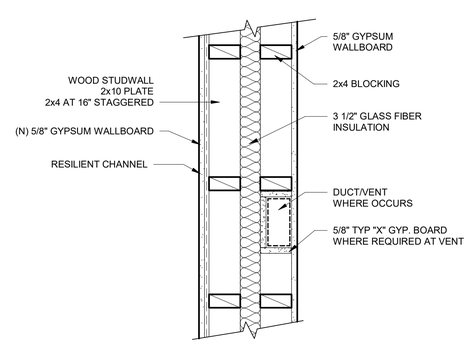

SECTION

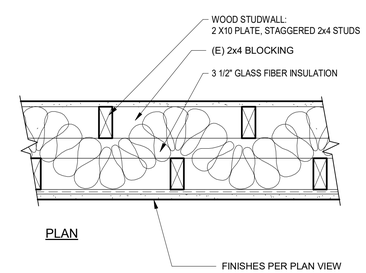

PLAN

1

1-HOUR UNIT SEPARATION (NEW CONSTRUCTION OR MODIFIED EXISTING WALL) STC 50

EXISTING WALLS TO HAVE SIMILAR CONSTRUCTION VERIFY WOOD STUDS. CONFIRM EXISTANCE OF INSULATION, AND PROVIDE NEW WHERE REQUIRED. REMOVE ONE SIDE OF GYP. BOARD, PROVIDE RESILIENT CHANNEL AND NEW GYP. BOARD FINISHES FOR CMPLETE ASSEMBLY.

WALL LEGEND
1 1/2" = 1'-0"

G:\2019 Projects\20-190708 City of Oxnard\Set 4-Concord\Drawings\Architectural\2950 & 2956 Concord Drive - CD (Floor Plans)\r4

THESE DRAWINGS AND SPECIFICATIONS ARE THE PROPERTY AND COPYRIGHT OF LAUTERBACH & ASSOCIATES. ALL RIGHTS RESERVED, AND SHALL NOT BE USED ON ANY OTHER WORK OR PROJECT EXCEPT BY WRITTEN AGREEMENT WITH LAUTERBACH & ASSOCIATES. WRITTEN DIMENSIONS SHALL TAKE PRECEDENCE OVER SCALED DIMENSIONS AND SHALL BE VERIFIED ON THE JOB SITE. ANY DISCREPANCY SHALL BE BROUGHT TO THE NOTICE OF LAUTERBACH & ASSOCIATES PRIOR TO COMMENCEMENT OF ANY WORK.

LAUTERBACH & ASSOCIATES
ARCHITECTS INC.
David C. Kesterson, Architect • Ilona Scott, Architect • Mark S. Pettit, Architect
300 MONTGOMERY AVENUE, OXNARD, CALIFORNIA 93036 | 805-988-0912 | FAX 805-981-4510 | www.la-arch.com

LICENSED ARCHITECT ILONA SCOTT No. C11881 Ren. 06/21 STATE OF CALIFORNIA

CONCORD DRIVE APARTMENTS

2950 & 2956 CONCORD DRIVE
OXNARD, CA, 93036

CITY OF OXNARD HOUSING AUTHORITY

435 S. D STREET
OXNARD, CALIFORNIA 93030

NO	DESCRIPTION	DATE

ISSUE

JOB NO.	20-190209
DRAWN BY:	TJL
CHECKED BY:	ISS
PROJECT MANAGER:	ISS
PRINT DATE:	8/12/2020 8:22:52 AM

WALL LEGEND

A-602

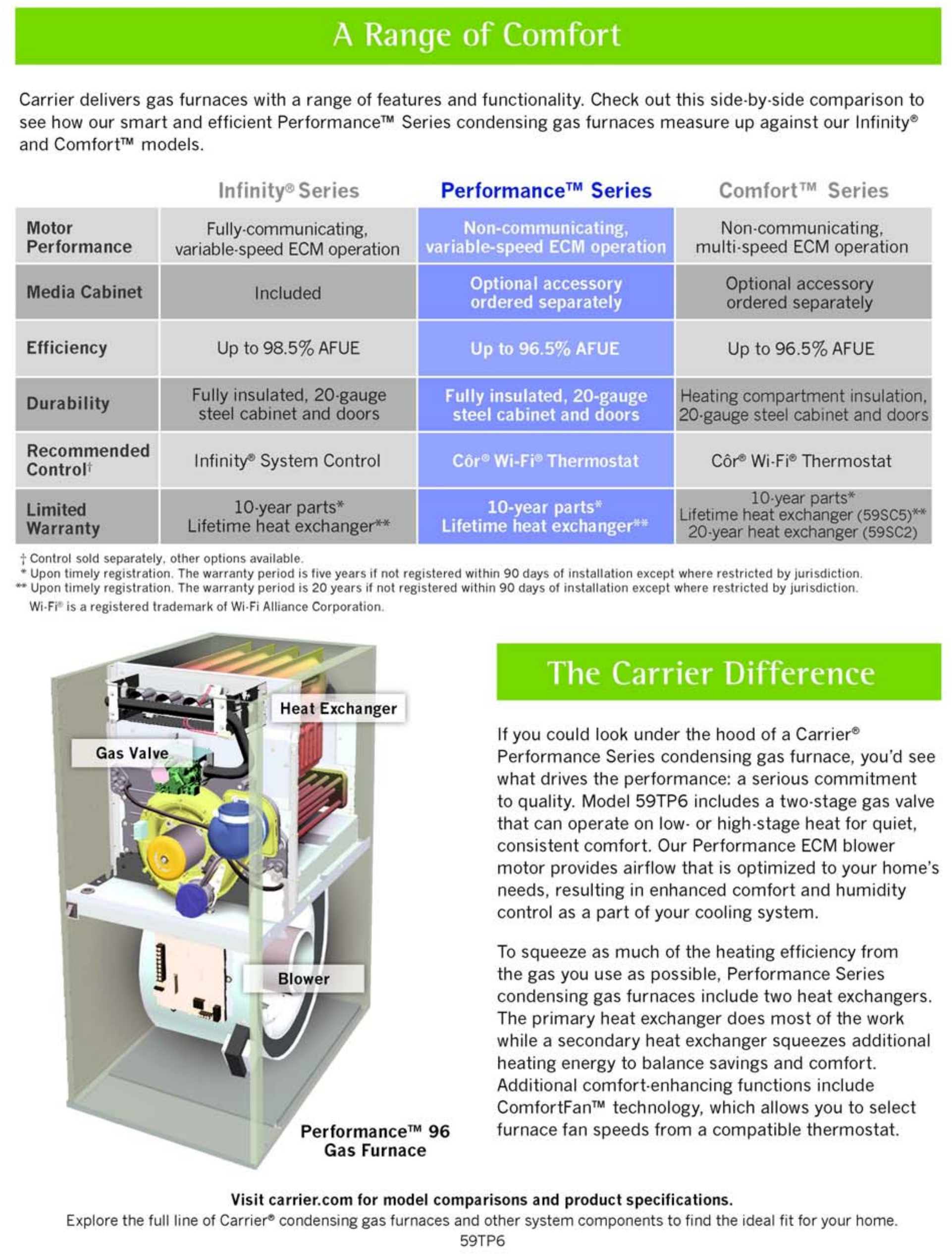
A Range of Comfort

Carrier delivers gas furnaces with a range of features and functionality. Check out this side-by-side comparison to see how our smart and efficient Performance™ Series condensing gas furnaces measure up against our Infinity® and Comfort™ models.

	Infinity® Series	Performance™ Series	Comfort™ Series
Motor Performance	Fully-communicating, variable-speed ECM operation	Non-communicating, variable-speed ECM operation	Non-communicating, multi-speed ECM operation
Media Cabinet	Included	Optional accessory ordered separately	Optional accessory ordered separately
Efficiency	Up to 98.5% AFUE	Up to 96.5% AFUE	Up to 96.5% AFUE
Durability	Fully insulated, 20-gauge steel cabinet and doors	Fully insulated, 20-gauge steel cabinet and doors	Heating compartment insulation, 20-gauge steel cabinet and doors
Recommended Control†	Infinity® System Control	Côr® Wi-Fi® Thermostat	Côr® Wi-Fi® Thermostat
Limited Warranty	10-year parts* Lifetime heat exchanger**	10-year parts* Lifetime heat exchanger**	10-year parts* Lifetime heat exchanger (59SC5)** 20-year heat exchanger (59SC2)

† Control sold separately, other options available.
* Upon timely registration. The warranty period is five years if not registered within 90 days of installation except where restricted by jurisdiction.
** Upon timely registration. The warranty period is 20 years if not registered within 90 days of installation except where restricted by jurisdiction.
Wi-Fi® is a registered trademark of Wi-Fi Alliance Corporation.

The Carrier Difference

If you could look under the hood of a Carrier® Performance Series condensing gas furnace, you'd see what drives the performance: a serious commitment to quality. Model 59TP6 includes a two-stage gas valve that can operate on low- or high-stage heat for quiet, consistent comfort. Our Performance ECM blower motor provides airflow that is optimized to your home's needs, resulting in enhanced comfort and humidity control as a part of your cooling system.

To squeeze as much of the heating efficiency from the gas you use as possible, Performance Series condensing gas furnaces include two heat exchangers. The primary heat exchanger does most of the work while a secondary heat exchanger squeezes additional heating energy to balance savings and comfort. Additional comfort-enhancing functions include ComfortFan™ technology, which allows you to select furnace fan speeds from a compatible thermostat.

Visit carrier.com for model comparisons and product specifications.
Explore the full line of Carrier® condensing gas furnaces and other system components to find the ideal fit for your home.
59TP6

F.A.U. (SECOND FLOOR UNIT) (FAU-1 SEE MECHANICAL PLAN)

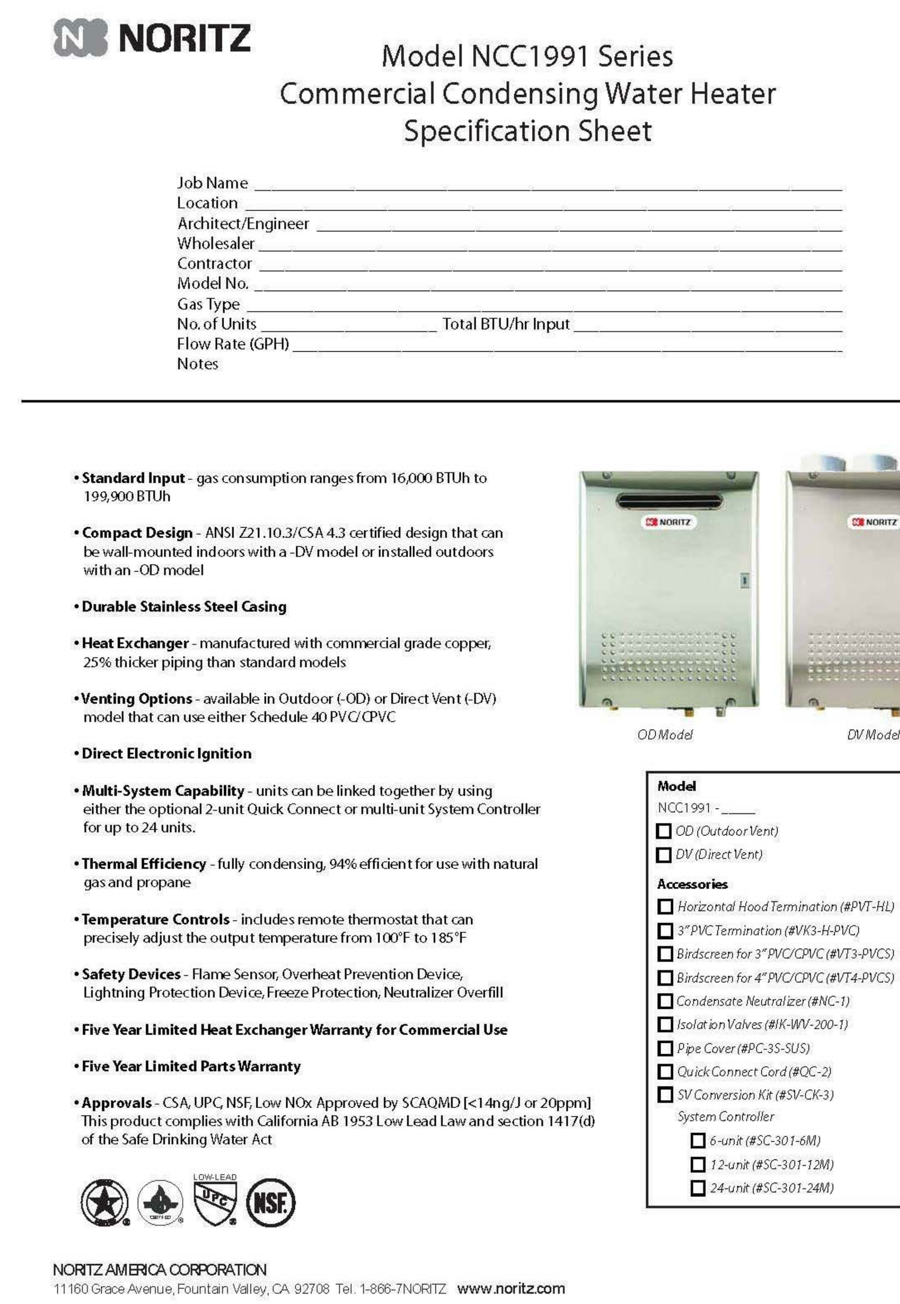
NORITZ

Model NCC1991 Series
Commercial Condensing Water Heater
Specification Sheet

Job Name ____
Location ____
Architect/Engineer ____
Wholesaler ____
Contractor ____
Model No. ____
Gas Type ____
No. of Units ____ Total BTU/hr Input ____
Flow Rate (GPH) ____
Notes

- **Standard Input** - gas consumption ranges from 16,000 BTUh to 199,900 BTUh
- **Compact Design** - ANSI Z21.10.3/CSA 4.3 certified design that can be wall-mounted indoors with a -DV model or installed outdoors with an -OD model
- **Durable Stainless Steel Casing**
- **Heat Exchanger** - manufactured with commercial grade copper, 25% thicker piping than standard models
- **Venting Options** - available in Outdoor (-OD) or Direct Vent (-DV) model that can use either Schedule 40 PVC/CPVC
- **Direct Electronic Ignition**
- **Multi-System Capability** - units can be linked together by using either the optional 2-unit Quick Connect or multi-unit System Controller for up to 24 units.
- **Thermal Efficiency** - fully condensing, 94% efficient for use with natural gas and propane
- **Temperature Controls** - includes remote thermostat that can precisely adjust the output temperature from 100°F to 185°F
- **Safety Devices** - Flame Sensor, Overheat Prevention Device, Lightning Protection Device, Freeze Protection, Neutralizer Overfill
- **Five Year Limited Heat Exchanger Warranty for Commercial Use**
- **Five Year Limited Parts Warranty**
- **Approvals** - CSA, UPC, NSF, Low NOx Approved by SCAQMD [<14ng/J or 20ppm] This product complies with California AB 1953 Low Lead Law and section 1417(d) of the Safe Drinking Water Act

OD Model   DV Model

Model
NCC1991 - ____
☐ OD (Outdoor Vent)
☐ DV (Direct Vent)

Accessories
☐ Horizontal Hood Termination (#PVT-HL)
☐ 3" PVC Termination (#VK3-H-PVC)
☐ Birdscreen for 3" PVC/CPVC (#VT3-PVCS)
☐ Birdscreen for 4" PVC/CPVC (#VT4-PVCS)
☐ Condensate Neutralizer (#NC-1)
☐ Isolation Valves (#IK-WV-200-1)
☐ Pipe Cover (#PC-3S-SUS)
☐ Quick Connect Cord (#QC-2)
☐ SV Conversion Kit (#SV-CK-3)
System Controller
☐ 6-unit (#SC-301-6M)
☐ 12-unit (#SC-301-12M)
☐ 24-unit (#SC-301-24M)

NORITZ AMERICA CORPORATION
11160 Grace Avenue, Fountain Valley, CA 92708 Tel. 1-866-7NORITZ www.noritz.com

WATER HEATER (SEE PLUMBING DRAWINGS)

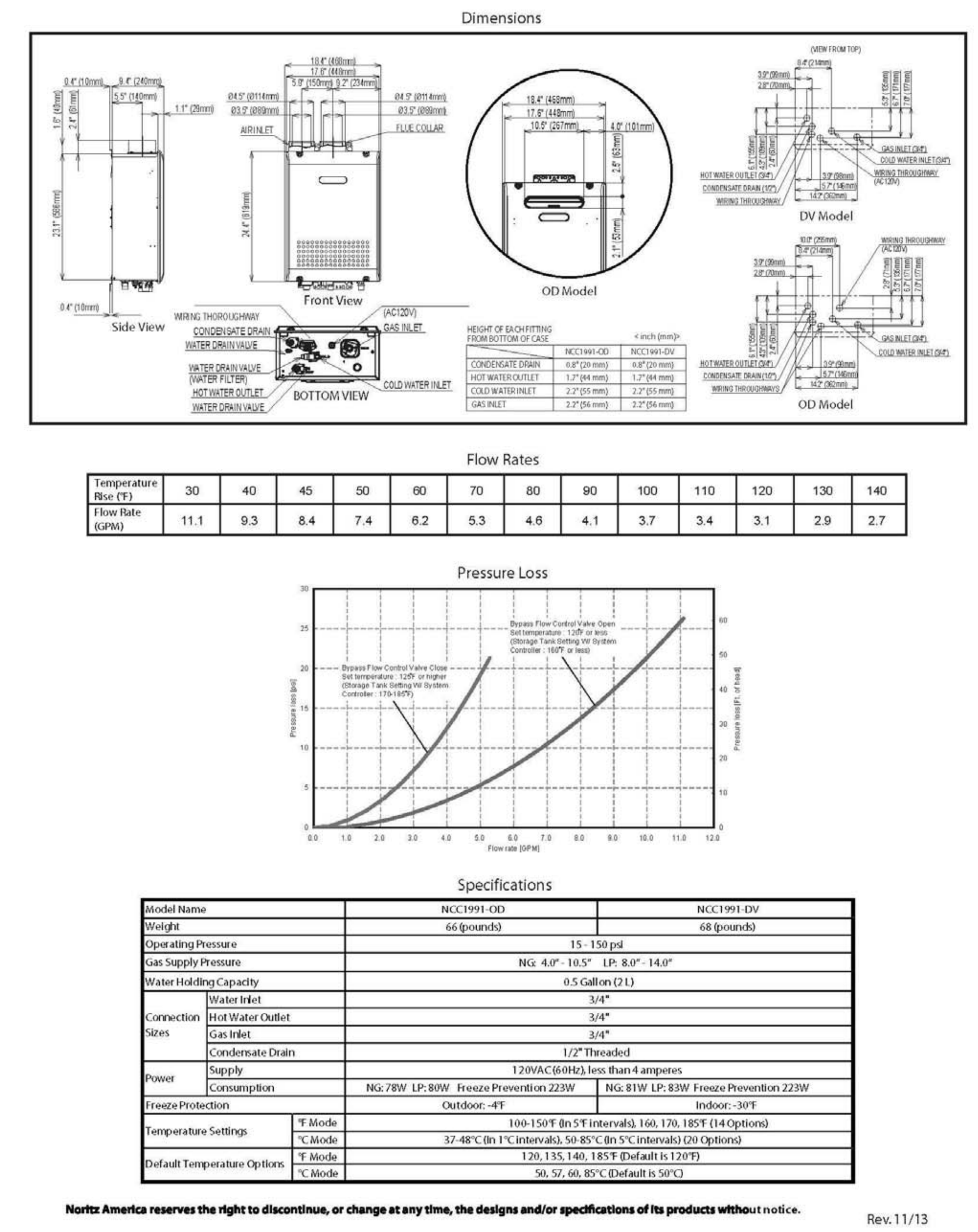
Dimensions

HEIGHT OF EACH FITTING FROM BOTTOM OF CASE	NCC1991-OD	NCC1991-DV
CONDENSATE DRAIN	0.8" (20 mm)	0.8" (20 mm)
HOT WATER OUTLET	1.7" (44 mm)	1.7" (44 mm)
COLD WATER INLET	2.2" (55 mm)	2.2" (55 mm)
GAS INLET	2.2" (56 mm)	2.2" (56 mm)

Flow Rates

Temperature Rise (°F)	30	40	45	50	60	70	80	90	100	110	120	130	140
Flow Rate (GPM)	11.1	9.3	8.4	7.4	6.2	5.3	4.6	4.1	3.7	3.4	3.1	2.9	2.7

Pressure Loss

Specifications

Model Name			NCC1991-OD	NCC1991-DV
Weight			66 (pounds)	68 (pounds)
Operating Pressure			15 - 150 psi	
Gas Supply Pressure			NG: 4.0" - 10.5" LP: 8.0" - 14.0"	
Water Holding Capacity			0.5 Gallon (2 L)	
Connection Sizes	Water Inlet		3/4"	
	Hot Water Outlet		3/4"	
	Gas Inlet		3/4"	
	Condensate Drain		1/2" Threaded	
Power	Supply		120VAC(60Hz), less than 4 amperes	
	Consumption		NG: 78W LP: 80W Freeze Prevention 223W	NG: 81W LP: 83W Freeze Prevention 223W
Freeze Protection			Outdoor: -4°F	Indoor: -30°F
Temperature Settings		°F Mode	100-150°F (In 5°F intervals), 160, 170, 185°F (14 Options)	
		°C Mode	37-48°C (In 1°C intervals), 50-85°C (In 5°C intervals) (20 Options)	
Default Temperature Options		°F Mode	120, 135, 140, 185°F (Default is 120°F)	
		°C Mode	50, 57, 60, 85°C (Default is 50°C)	

Noritz America reserves the right to discontinue, or change at any time, the designs and/or specifications of its products without notice.

Rev. 11/13

10 YEAR LIMITED WARRANTY
NAT. GAS & LP

COZY

DIRECT-VENT
WALL FURNACE

The Cozy Direct-Vent Wall Furnace mounts on an outside wall and occupies minimal room space. The continuous seam-welded combustion chamber draws air from the outside and exhausts through a concentric vent system, which keeps the interior air warm and fresh. The louvered cabinet design maximizes airflow, providing uniform temperatures from floor to ceiling.

A telescoping vent assembly is included and fits a standard 5"- 9" wall thickness, eliminating the need for expensive and difficult-to-install vent pipe systems. A wall-mounted thermostat comes standard, or choose the optional built-in bulb stat kit (BBSK). Both provide precise temperature control, even if the electrical power fails. All controls include a 100% safety pilot and pressure regulator for safe, efficient operation.

COZY VALUE FEATURES:
- Sealed Combustion System.
- Telescoping Vent System (5" x 9" Standard).
- Millivolt Controls 3 BTU Sizes - 15,000, 25,000 & 33,000

Cozy Heating Systems LLC
phone - 502.589.5380
toll free - 855.589.5380
www.cozyheaters.com

HARDI

Made in the USA

DIRECT-VENT
WALL FURNACE

COZY

Nat. Gas Model #* / LP Gas Model #	CDV155 / CDV156	CDV255 / CDV256	CDV335 / CDV336
BTU Input / Hr	15,000	25,000	33,000
Control	M. Volt / Wall Stat	M. Volt / Wall Stat	M. Volt / Wall Stat
Dimensions (H x W x D)	29 ¾" † x 18" x 9 ¾"	31 ½" †† x 34 ½" x 9 ¾"	31 ½" †† x 34 ½" x 9 ¾"
Gas Inlet Size	1/2"	1/2"	1/2"
Vent Size	9" *	9" *	9" *
Center of Horizontal Vent to Floor	22"	24 ⅛"	24 ⅛"
Optional Equipment	VK 1525 / 9" - 15" VK 1525 / 15" - 24" Fan DVB-3 BBSK	VK 1525 / 9" - 15" VK 1525 / 15" - 24" Fan DVB-3 BBSK	VK 33 / 9" - 15" - Fan DVB-3 BBSK
Approximate Shipping Weight	65 lbs	99 lbs	99 lbs

*Propane conversion kits available. Specify altitude if other than 2,000 ft elevation.
† Includes 1/2" Floor Clearance †† Includes 4" floor Clearance **Wall Opening

Cozy Heating Systems LLC
phone - 502.589.5380 fax - 502.589.5382 toll free - 855.589.5380 www.cozyheaters.com
*Warning: All Cozy Natural Gas and LP units must be installed by a certified installer.

WALL HEATER AT BEDROOM (SH-2 SEE MECHANICAL PLAN)

1

WILLIAMS™

MONTEREY HOME FURNACES

Monterey Home Furnace models feature energy and money-saving operating costs. Easily recessed or surface-mounted options are great in homes, schools, cabins, apartments, offices and shops.

Heating rooms individually allows comfort in areas being used while saving fuel costs in unused areas.

For additional money-saving efficiency, install one of our optional blowers.

FEATURES
- No electricity required
- "Matchless" pilot igniter
- Easy installation
- Patented side-relief opening draft hood design reduces flue gas temperature to minimize normal heat loss
- Natural or propane models (conversion kits available)
- Automatic temperature and safety controls
- Resettable vent-limit safety switch

DUAL-WALL TOP-VENT 50,000 BTU/hr.   25,000 - 35,000 BTU/hr.

Williams' dual-wall model, with patented energy-maximizing side-relief draft hood openings, will heat two or more rooms quickly and economically. Conveniently installs in the wall to heat two adjacent rooms (25,000 BTU/hr. on each side).

DESIGNED & ASSEMBLED IN THE USA SINCE 1916

WALL HEATER AT LIVINGROOM AREA (SH-1 SEE MECHANICAL PLAN)

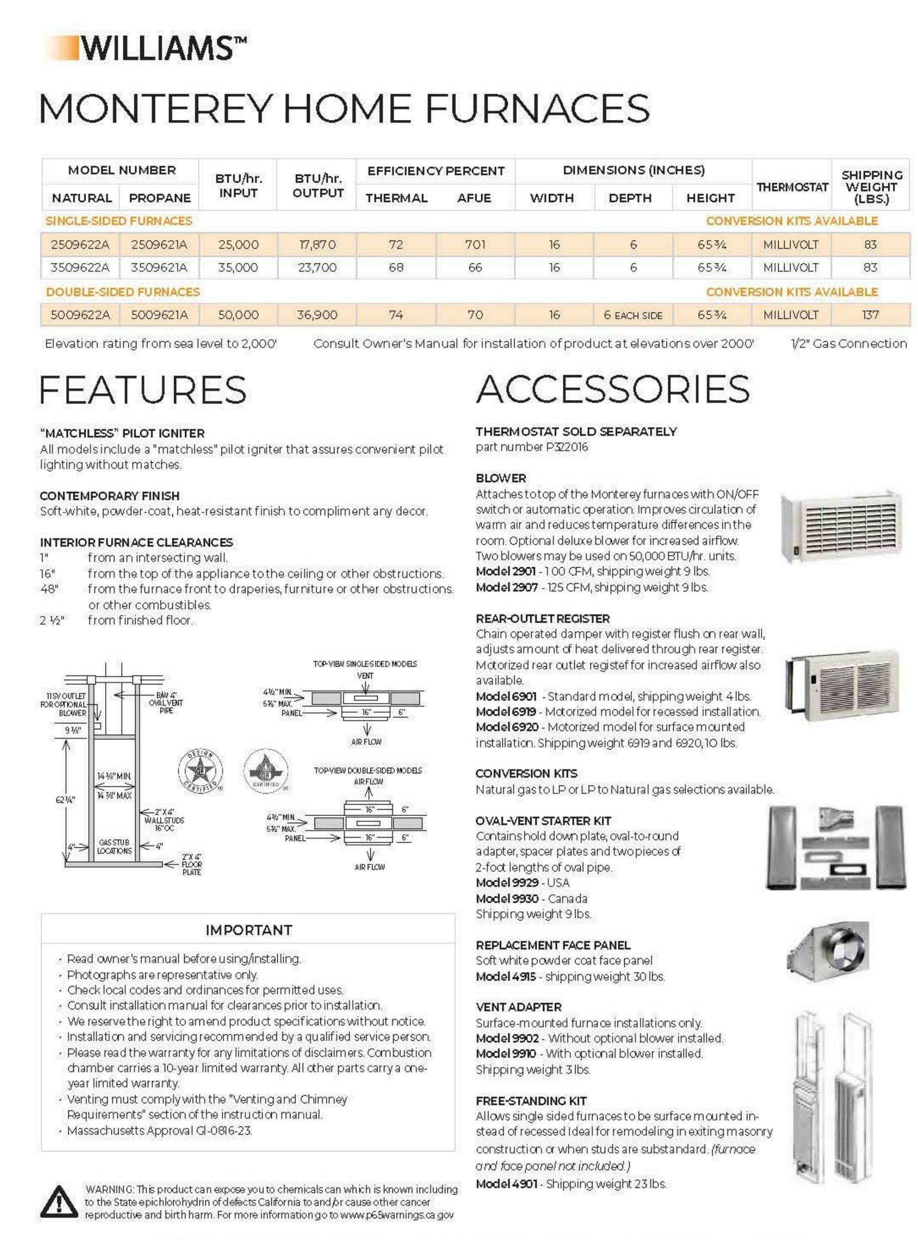
WILLIAMS™

MONTEREY HOME FURNACES

MODEL NUMBER NATURAL	PROPANE	BTU/hr. INPUT	BTU/hr. OUTPUT	EFFICIENCY PERCENT THERMAL	AFUE	DIMENSIONS (INCHES) WIDTH	DEPTH	HEIGHT	THERMOSTAT	SHIPPING WEIGHT (LBS.)
SINGLE-SIDED FURNACES								CONVERSION KITS AVAILABLE		
2509622A	2509621A	25,000	17,870	72	701	16	6	65¾	MILLIVOLT	83
3509622A	3509621A	35,000	23,700	68	66	16	6	65¾	MILLIVOLT	83
DOUBLE-SIDED FURNACES								CONVERSION KITS AVAILABLE		
5009622A	5009621A	50,000	36,900	74	70	16	6 EACH SIDE	65¾	MILLIVOLT	137

Elevation rating from sea level to 2,000' Consult Owner's Manual for installation of product at elevations over 2000' 1/2" Gas Connection

FEATURES

"MATCHLESS" PILOT IGNITER
All models include a "matchless" pilot igniter that assures convenient pilot lighting without matches.

CONTEMPORARY FINISH
Soft-white, powder-coat, heat-resistant finish to compliment any decor.

INTERIOR FURNACE CLEARANCES
1" from an intersecting wall.
16" from the top of the appliance to the ceiling or other obstructions.
48" from the furnace front to draperies, furniture or other obstructions or other combustibles.
2 ½" from finished floor.

IMPORTANT
- Read owner's manual before using/installing.
- Photographs are representative only.
- Check local codes and ordinances for permitted uses.
- Consult installation manual for clearances prior to installation.
- We reserve the right to amend product specifications without notice.
- Installation and servicing recommended by a qualified service person.
- Please read the warranty for any limitations of disclaimers. Combustion chamber carries a 10-year limited warranty. All other parts carry a one-year limited warranty.
- Venting must comply with the "Venting and Chimney Requirements" section of the instruction manual.
- Massachusetts Approval GI-0816-23.

WARNING: This product can expose you to chemicals can which is known including to the State epichlorohydrin of defects California to and/or cause other cancer reproductive and birth harm. For more information go to www.p65warnings.ca.gov

ACCESSORIES

THERMOSTAT SOLD SEPARATELY
part number P322016

BLOWER
Attaches to top of the Monterey furnaces with ON/OFF switch or automatic operation. Improves circulation of warm air and reduces temperature differences in the room. Optional deluxe blower for increased airflow. Two blowers may be used on 50,000 BTU/hr. units.
Model 2901 - 100 CFM, shipping weight 9 lbs.
Model 2907 - 125 CFM, shipping weight 9 lbs.

REAR-OUTLET REGISTER
Chain operated damper with register flush on rear wall, adjusts amount of heat delivered through rear register. Motorized rear outlet register for increased airflow also available.
Model 6901 - Standard model, shipping weight 4 lbs.
Model 6919 - Motorized model for recessed installation.
Model 6920 - Motorized model for surface mounted installation. Shipping weight 6919 and 6920, 10 lbs.

CONVERSION KITS
Natural gas to LP or LP to Natural gas selections available.

OVAL-VENT STARTER KIT
Contains hold down plate, oval-to-round adapter, spacer plates and two pieces of 2-foot lengths of oval pipe.
Model 9929 - USA
Model 9930 - Canada
Shipping weight 9 lbs.

REPLACEMENT FACE PANEL
Soft white powder coat face panel
Model 4915 - shipping weight 30 lbs.

VENT ADAPTER
Surface-mounted furnace installations only.
Model 9902 - Without optional blower installed.
Model 9910 - With optional blower installed.
Shipping weight 3 lbs.

FREE-STANDING KIT
Allows single sided furnaces to be surface mounted instead of recessed Ideal for remodeling in exiting masonry construction or when studs are substandard. *(furnace and face panel not included.)*
Model 4901 - Shipping weight 23 lbs.

250 W. Laurel Street · Colton, CA 92324 USA   Subject to change without notice   © 2019 Williams   L1073, 8-19

1

LAUTERBACH & ASSOCIATES
ARCHITECTS INC.
David C. Kesterson, Architect • Ilona Scott, Architect • Mark S. Pettit, Architect
300 MONTGOMERY AVENUE, OXNARD, CALIFORNIA 93036 | 805-988-0912 | FAX 805-981-4510 | www.la-arch.com

LICENSED ARCHITECT
ILONA SCOTT
No. C11881
Ren. 06/21
STATE OF CALIFORNIA

CONCORD DRIVE APARTMENTS
2950 & 2956 CONCORD DRIVE
OXNARD, CA, 93036

CITY OF OXNARD HOUSING AUTHORITY
435 S. D STREET
OXNARD, CALIFORNIA 93030

NO	DESCRIPTION	DATE
1	PLAN CHECK SUBMITTAL	07/31/2020

ISSUE

JOB NO. 20-190209

DRAWN BY: Author
CHECKED BY: Checker
PROJECT MANAGER: Approver
PRINT DATE: 8/10/2020 8:56:05 AM

MECHANICAL PRODUCT INFORMATION

A-701

THESE DRAWINGS AND SPECIFICATIONS ARE THE PROPERTY AND COPYRIGHT OF LAUTERBACH & ASSOCIATES. ALL RIGHTS RESERVED, AND SHALL NOT BE USED ON ANY OTHER WORK OR PROJECT EXCEPT BY WRITTEN AGREEMENT WITH LAUTERBACH & ASSOCIATES. WRITTEN DIMENSIONS SHALL TAKE PRECEDENCE OVER SCALED DIMENSIONS AND SHALL BE VERIFIED ON THE JOB SITE. ANY DISCREPANCY SHALL BE BROUGHT TO THE NOTICE OF LAUTERBACH & ASSOCIATES PRIOR TO COMMENCEMENT OF ANY WORK

G:\2019 Projects\20-190708 City of Oxnard-Set 4-Concord\Drawings\Architectural\2950 & 2956 Concord Drive - CD (Floor Plans).rvt

MANDATORY MEASURES

Maximum length of flexible duct and connectors shall not be more than 5 feet. Flexible ducts shall not be used in lieu of rigid elbows.

Sec 603.4.1

Each space-conditioning system shall be installed with controls that comply with the following:

1) Capable of automatically shutting off the system during periods of non-use and shall have:
   (1) An automatic time switch control device complying with Sec. 110.9, with an accessible manual override that allows operation of the system for up to 4 hours; or
   (2) An occupancy sensor; or
   (3) A four-hour timer that can be manually operated.
   EXCEPTION: Mechanical systems serving retail stores and associated malls, restaurants, grocery stores, churches, and theaters equipped with 7-day programmable timers.
2) Automatically restart and temporarily operate the system as required to maintain:
   (1) A setback heating thermostat set point, if the system provides mechanical heating;
   EXCEPTION: Area with the design winter outdoor temperature of greater than 32° F.
   (2) A setup cooling thermostat set point, if the system provides mechanical cooling.
   EXCEPTION: Area with the design summer outdoor temperature of less than 100°F.
3) Multipurpose room less than 1000 ft², classrooms greater than 750 ft² and conference, convention, auditorium and meeting center rooms greater than 750 ft² that do not have processes or operations that generate dusts, fumes, vapors or gasses shall be equipped with occupant sensor(s) to accomplish the following during unoccupied periods:
   (1) Automatically setup the operating cooling temperature set point by 2°F or more and setback the operating heating temperature set point by 2°F or more; and
   (2) Automatically reset the minimum required ventilation rate with an occupant sensor ventilation control device according to Section 120.1(c)5.
   Exception to Sections 120.2(e)3: If Demand Control Ventilation is implemented as required by Section 120.1(c)3 and 120.1(4).

Sec. 120.2 (e)

These drawings are the instruments of service and are the property of ALL-TRADE ENGINEERING. All designs and other information contained on these drawings are for use on the specified project and shall not be used on other projects, or for additions to this project, or for completion of this project by others without first obtaining the expressed written permission and consent of ALL-TRADE ENGINEERING. These drawings shall not be reproduced, changed or copied in any form or manner whatsoever without first obtaining the expressed written permission and consent of ALL-TRADE ENGINEERING nor are they to be assigned to any third party without said written permission and consent. All designs and information contained in these drawings are based on information provided by the client. ALL-TRADE ENGINEERING has relied solely on said client information in the preparation of the designs and other information contained on these drawings. ALL-TRADE ENGINEERING assumes no responsibility for any work performed based on said information. The designs and other information contained on these drawings may be subject to modifications as required by additional information including, but not limited to, final boundary survey, survey of as-built conditions, government agency input, program modifications, etc. These plans are only valid for six months from the plot date due to Code changes, industry standards, and site conditions.

EQUIPMENT SCHEDULE

UNIT	TONS	MODEL	COOLING (BTUH)	AFUE	HEATING (BTUH)	CFM	MCA	MOCP	VOLTAGE	WEIGHT (LB.)	LIQUID LINE	VAPOR LINE	REMARKS
FAU-1		CARRIER #59TP5A080E17--16		96.2	78,000 / 50,000	1,360	GAS	GAS	115V 1P 60Hz	156			VERTICAL. PROVIDE DUCT SMOKE DETECTOR
SH-1	2.0 T	WILLAMS COMFORT #3509622A		.81 AFUE	23,700	110 - 162	GAS	GAS	120V 1P 60Hz	57			WALL MOUNTED UNIT
SH-2	2.0 T	COZY HEATING #CDV255D		.81 AFUE	25,000	110 - 162	GAS	GAS	120V 1P 60Hz	80			UNIT TO BE USED IN BEDROOMS MOUNTED ON EXTERIOR WALL
EF-1		PANASONIC FV-10VS1				100	0.2	20	120V	20			INTEGRAL BACKDRAFT DAMPER. INTERLOCK W/ HUMIDISTAT SWITCH

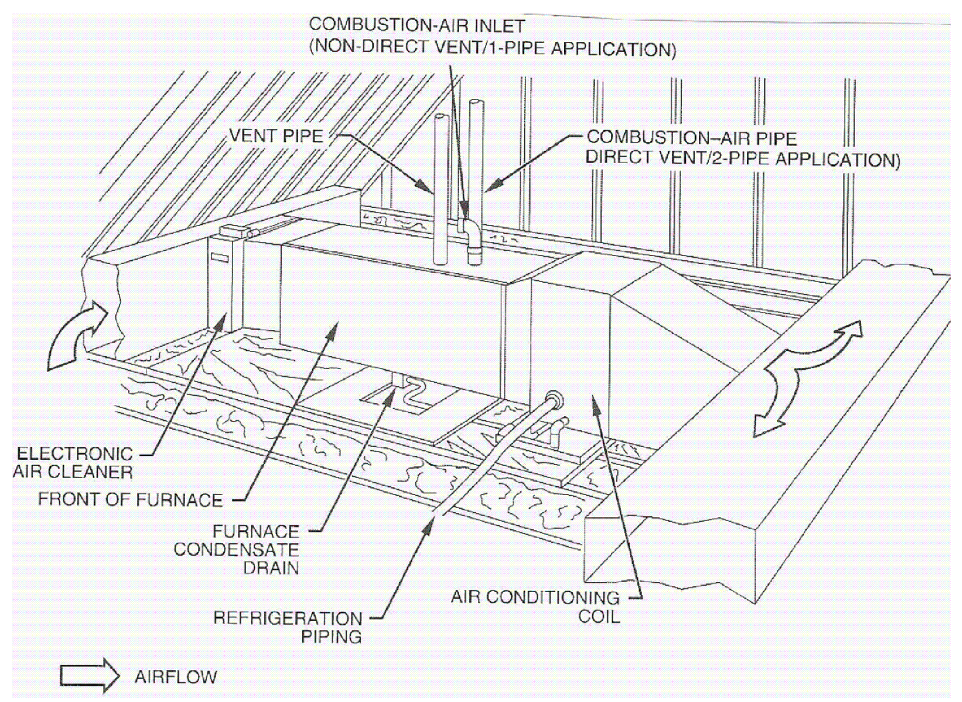

1. Provide an attic access a minimum of 22"x30" not over 20' from the equipment.
2. Provide an unobstructed passageway 30" wide x 30" high with solid continuous flooring from the access to the equipment/control panel. The passageway shall be at least as large as the largest component of the appliance. Provide a level, unobstructed work platform not less than 30"X30" square in front of the equipment with 30" headroom. [§305 CMC]
3. Provide a 120V receptacle and a light near the equipment. The light switch shall be located at the attic access.
4. Provide a 3/4" primary condensate drain. Provide a 3/4" secondary condensate drain line which terminates over a window.
5. All combustion air openings, including attic vents, shall be covered with a corrosion resistant screen with a 1/4" mesh.
6. Solid and liquid lines shall be located a minimum of 6" above the flood level rim of the condensing units.
7. See detail 2/- for equipment support.

MECHANICAL NOTES

1. All work shall be in accordance and comply with the latest applicable city ordinance and the 2019 CMC.
2. It is the intent of these drawings that this be a complete mechanical installation. Any apparent errors shall be brought to the attention of the designer and/or tenant prior to proceeding.
3. Contractor shall verify all existing conditions versus new installations to assure proper new installations can be completed properly prior to proceeding.
4. These plans shall be used only after approvals and permits have been secured by the proper jurisdiction of the department of building and safety.
5. All drawings and details are provided as a diagrammatic version of the proposed work. The contractor shall be held liable and responsible for all field verifications of equipment, materials, and installations.
6. Contractor shall verify all equipment is installed in accordance with manufacturer's recommendations and local code requirements prior to any installations.
7. All duct work shall be provided, installed, sealed, and insulated per chapter 6 of the 2019 CMC and 'SMACNA HVAC Duct Construction Standards.'
8. Means for interrupting the electrical supply to the air conditioning equipment and to its associated cooling tower shall be provided within sight of and not over 50 ft. from the air-conditioner and cooling tower. [§903.7 CMC]
9. All controls shall be from 36" to 48" AFF max and within sight of the fixtures.
10. Penetrations of fire-resistive walls, floor-ceilings and roof ceilings shall be protected as required in CBC Sections 712.3 & 712.4.
11. Contractor doing the mechanical work is responsible for verifying in the field that the HVAC system is capable of providing the necessary minimum outside air volume.
12. Air balancing may be required and shall be performed by the mechanical contractor doing the work.
13. All OSA intakes and makeup air intakes shall be provided and installed a minimum of 10' away from plumbing, toilet, water closets, and all appliance venting. Intakes may be located 3' below said appliance venting.
14. The contractor shall be solely responsible for construction mean, methods, sequences, of construction and the safety of workmen. Comply with all OSHA regulations.
15. No piping, ductwork, controls, etc., shall be installed or routed above electrical panels and equipment or through elevator rooms or shafts.
16. The mechanical and electrical contractors shall coordinate the electrical characteristics of all mechanical equipment prior to ordering of equipment. No additional payment will be made for lack of contractor coordination of electrical characteristics.
17. All mechanical and electrical system components shall be routed tight to underside of structure and through joists or trusses where possible. Coordinate installation to preserve headroom, equipment access, and architectural clearances for finishes, including ceiling heights. Coordinate with all other trades and do not conflict with the architectural requirements for the finished construction. Provide offsets where required to coordinate with other trades.
18. Refer to architectural reflected ceiling plans for locations of all grilled and diffusers.
19. All equipment and materials shall be new, free of defects and U.L. listed/labeled.
20. All cutting and chasing of the building construction required for this work shall be by this contractor unless shown on architectural drawings and confirmed as to size and location prior to new construction. Cutting shall be in a neat and workmanlike manner.
21. Exact location of rooftop mechanical units shall be approved by the structural engineer of record. Mechanical contractor shall furnish and install all supplemental support steel for units and roof duct penetrations after approval of structural engineer of record.
22. Fabricate and erect all ductwork to ASHRAE and SMACNA standards from #1 galvanized steel.
23. All ductwork in areas without ceilings that is to be painted shall be provided with paint grip finish. Comply with SMACNA standards and NFPA bulletin 90A requirements.
24. Ductwork shall be SMACNA low pressure construction 2" static pressure rating with Seal Class B seams and joints.
25. Flexible ducts shall be independently supported from the structure and connected with plastic drawbands tightened with manufacturer's tool. Flexible ducts are not permitted in rooms without ceilings. Flexible ducts shall be ATCO rubber type 070, 1 ½" insulation and rated at 10" W.C. for sizes through 12", UL listed, and meet 25/50 flame and smoke test. No interior color other than black is permitted for flexible ducts. Equivalent by Valuflex, Flexaire, Flexible Technologies, Thermaflex, or Genflex.
26. Include all turning veins, manual dampers, flexible connectors, grills and diffusers, acoustic lining, and other sheet metal accessories for the project. Volume dampers to be of opposed blade construction with locking quadrants. Provide volume dampers at supply air runouts to all ceiling diffusers.
27. All branch connection fittings in rectangular ductwork shall be 45 AVPree transition type, conical fittings, or spin-in fittings with integral air scoops. Butt fittings are not acceptable.
28. Acoustic line all rectangular ducts indicated on drawings with minimum 1" thick non-flaking, coated medium density liner. Apply to manufacturer's recommendations. Duct dimensions are outside dimensions, and include acoustic lining.
29. Provide curbs for all roof openings for ducts, flues, piping, and equipment. Curbs shall be furnished as accessories to the equipment or 8" high plate or equal equipment supports spanning structure and flashed into roofing. Roof curbs shall be compatible with roofing system and shall match roof flashing, and patching of roof shall be by a certified roofing contractor approved by the owner/tenant and paid for by the mechanical contractor.
30. All rigid round ductwork to be internally insulated.
31. From each air conditioning unit, install 4" deep trapped condensate drain with cleanout and terminate as shown on plans.
32. HVAC contractor to furnish all HVAC equipment indicated and/or scheduled on the drawings complete with bases, insulators, supports, and other required accessories.
33. Completely install equipment and place in proper operation per manufacturer's recommendations, lubricate and adjust as required. Furnish and install clean set of filters prior to balancing.
34. Equipment to be make and model as scheduled unless owner approved, equivalent quality and performance equipment is submitted as substitution. All substitutions subject to acceptance without qualification by owner/tenant and design engineer.
35. Furnish and install all controls for HVAC systems. Provide all relays and devices required for complete operation. Mount all controls furnished as accessories to equipment and provide all control wiring or power wiring required for control system where not specifically shown on electrical plans. All exposed wiring shall be in EMT conduit per CEC. Concealed wiring in ceiling plenums may be UL listed plenum rated cable neatly supported in wirings.
36. No thermostat shall be installed above any heat producing equipment.
37. Supports and hangers are to be provided to properly support, secure and align ductwork and to meet conditions. Provide seismic bracing for hangers and supports supporting ductwork. Comply with the latest edition of the Sheet Metal and Air Conditioning Contractors National Association Inc. (SMACNA) Seismic Restraint Manual as approved by ANSI.
38. At ducts to equipment, provide waterproof vent fabric flexible connections with a minimum of 6" full length, and approved by the AHJ. Where exposed to the outside, provide sun shield over the flexible connection.
39. Each rooftop AC unit and outdoor unit shall be mounted on freestanding spring type isolators with seismic restraints for lateral and vertical motion. Mounting shall be hot dipped galvanized.
40. Refrigerant piping to be Type "L" copper with brazed fittings using silver solder installed per the manufacturer's instructions for R-22 service. Piping shall be insulated with 1" thick insulation with all joints sealed with adhesive. Factory precharged piping may be used where length of run does not exceed 75'. Where insulation is exposed to weather it shall be covered with a jacket or protective/weather resistive paint which is a minimum of .016" thick.
41. Provide hangers and supports as required, straps and/or wire is unacceptable.
42. Coordinate work of this section with work of other sections to avoid conflicts. If required, provide shop drawings and submit to design engineer for approval.
43. Ensure that work of other sections is suitable to accommodate work of this section.
44. HVAC systems rated at 2000 cfm or greater shall be equipped with a duct smoke detector to automatically shut off the HVAC system if smoke is detected. The detectors shall be installed in the main supply duct downstream of any filters.
45. Condensate from cooling coils and overflow of evaporative coolers shall be collected and discharged to an approved plumbing fixture or disposal area. CMC Sec. 310.1.
46. Duct systems used with blower type equipment which are portions of a heating, cooling, absorption, evaporative cooling or outdoor air ventilation system shall be sized in accordance with Chapter 17 of the 2019 CMC.

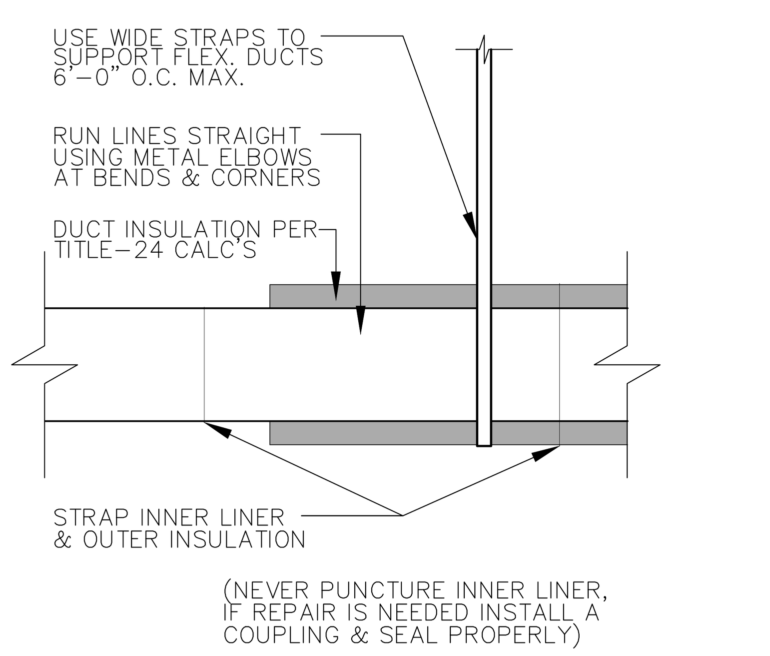

1 FLEX DUCT SUPPORT

SCALE: N.T.S.

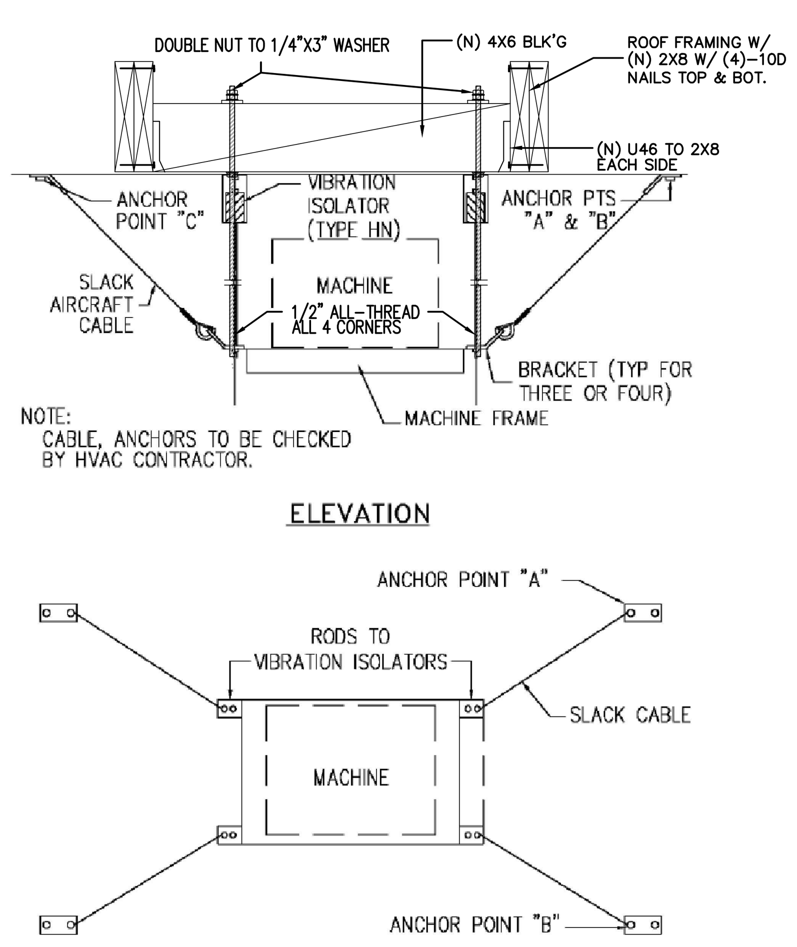

2 EQUIPMENT SUPPORT

SCALE: N.T.S.

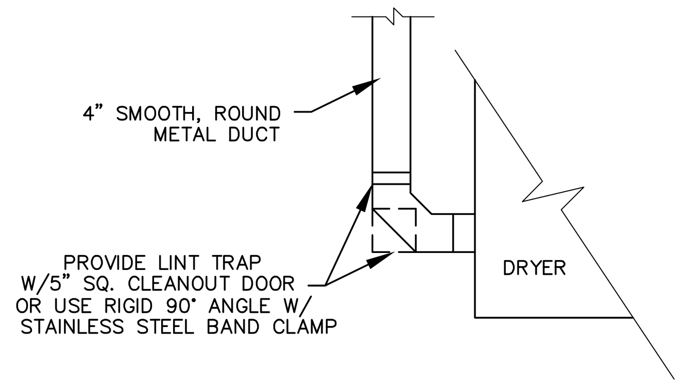

1 VERTICAL DRYER VENT CLEANOUT

SCALE: N.T.S.

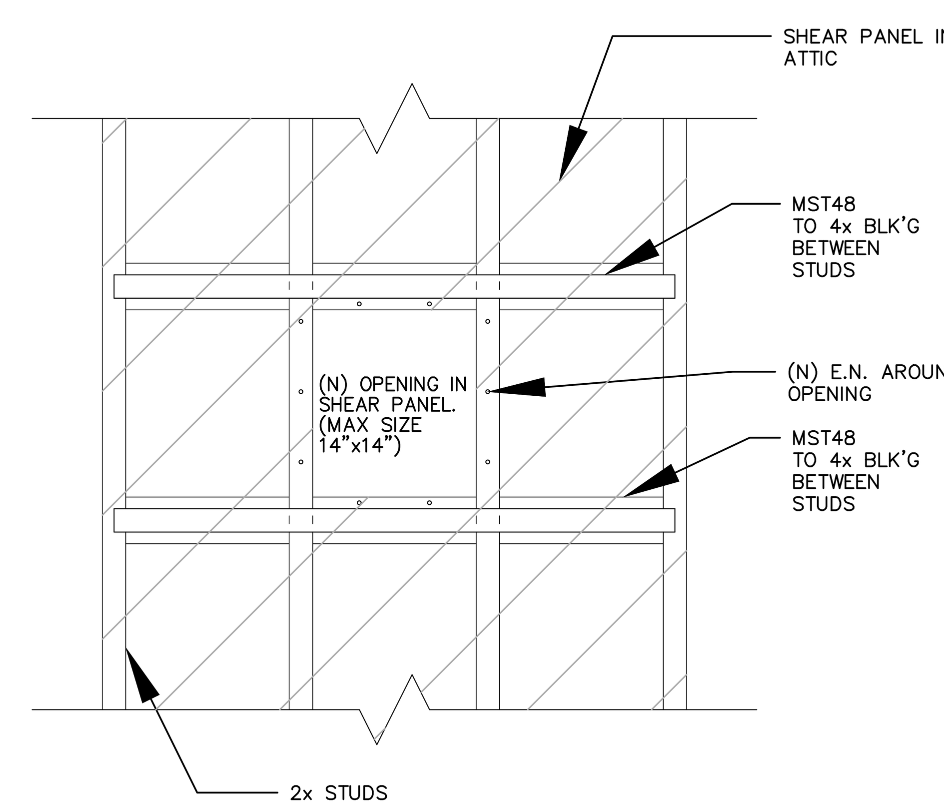

1 DUCT PENETRATIONS

SCALE: N.T.S.

DRAWINGS VALID ONLY WITH ENGINEER'S WET SIGNATURE OVER SEAL ON EACH SHEET IN INK

REVISIONS

AVP 2/12/20

JOB NAME

PROPOSED WORK FOR:
1357 ALTHEA DR.
OXNARD, CA. 93036

ALL-TRADE
Engineering & Design
17 EAST HIGH STREET MOORPARK, CA
T:805-552-4000 F:805-380-4551
JUDDSALLTRADE@YAHOO.COM www.AllTradeEngineering.com

SHEET TITLE

HVAC NOTES/DETAILS

REGISTERED PROFESSIONAL ENGINEER SHANE DENNIS JUDD No. C70991 Exp. 06-30-21 CIVIL STATE OF CALIFORNIA

REGISTERED PROFESSIONAL ENGINEER SHANE DENNIS JUDD No. M37632 Exp. 12-31-21 MECHANICAL STATE OF CALIFORNIA

M-0.0

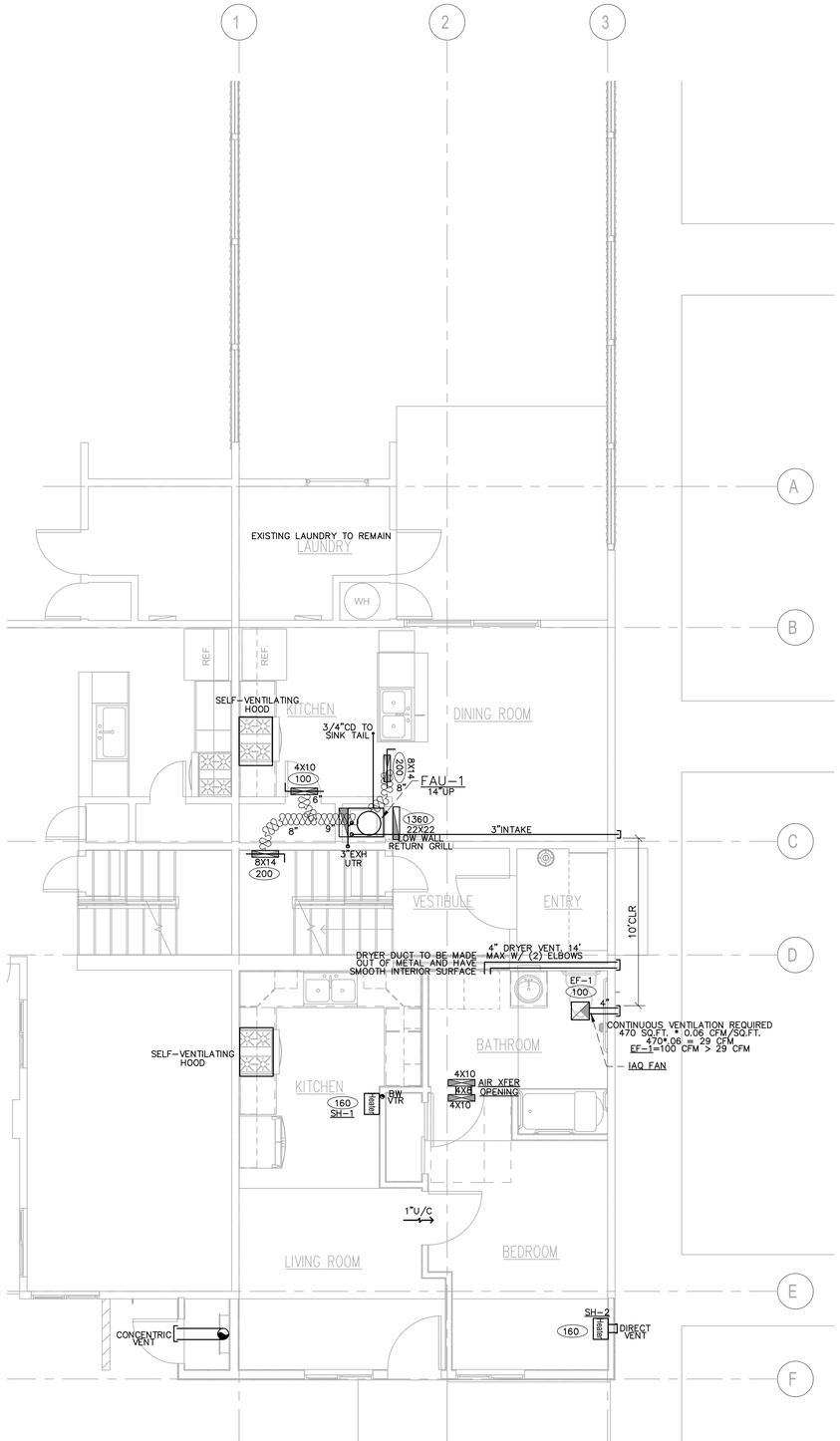

FIRST FLOOR HVAC PLAN

SCALE: 1/4":12"

HVAC LEGEND

- EXHAUST FAN – SEE SCHEDULE
- ##"X##" SUPPLY AIR REGISTER
- ##"X##" RETURN AIR REGISTER
- DESIGN CFM
- SD DUCT SMOKE DETECTOR
- VOLUME DAMPER
- POINT OF CONNECTION (VIF)
- ## 26 GA FLEXIBLE DUCT/DIAMETER PROVIDE R-6 INSULATION
- ## 26 GA EXPOSED RIGID DUCT/DIAMETER
- T DDC THERMOSTAT – WSHP#
- ## XXXXX DUCT ROUTING INSTRUCTION
- SHUT OFF VALVE

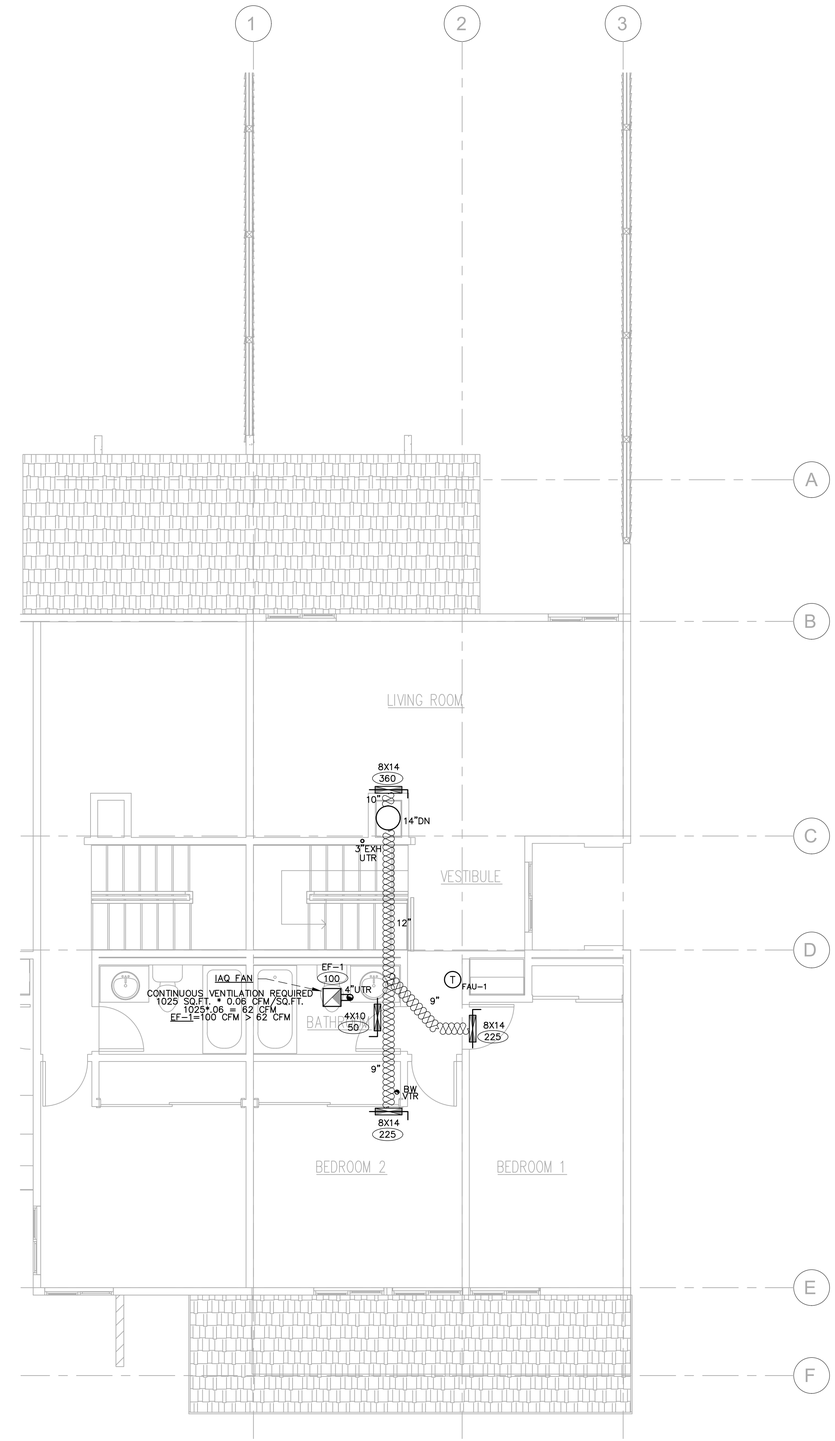

SECOND FLOOR HVAC PLAN

SCALE: 1/4":12"

Note: drawing #1.1.10 (CODE CHECK) and #1.1.11 (CODE CHECK) are the property of ALL-TRADE ENGINEERING, all rights are other information contained on these drawings are to be used for the specified project and are not to be used for any other project without the written consent of ALL-TRADE ENGINEERING. These drawings are instruments of service and are the property of ALL-TRADE ENGINEERING whether the project for which they are made is executed or not. The reproduction, alteration or use of these drawings without written consent of ALL-TRADE ENGINEERING is prohibited. ALL-TRADE ENGINEERING assumes no responsibility to any work performed based on field information, the designs and other information contained on these drawings may be subject to change based on information provided by the client. ALL-TRADE ENGINEERING is the sole owner of all the information in the preparation of the designs and other information contained on these drawings.

REVISIONS

AVP
2/12/20

JOB NAME

PROPOSED WORK FOR:
1357 ALTHEA DR.
OXNARD, CA. 93036

DRAWINGS VALID ONLY WITH ENGINEER'S WET SIGNATURE OVER SEAL ON EACH SHEET IN INK

ALL-TRADE
Engineering & Design
17 EASTMAN STREET
VENTURA, CA
T:805-535-1000
F:805-304-4551
JOE@ALLTRADEWHOO.COM
www.alltradeengineering.com

SHEET TITLE

HVAC PLAN

REGISTERED PROFESSIONAL ENGINEER
SHANE BENNITS
No. E-18991
Exp. 06-30-21
CIVIL
STATE OF CALIFORNIA

REGISTERED PROFESSIONAL ENGINEER
SHANE BENNITS
No. M34812
Exp. 12-31-21
MECHANICAL
STATE OF CALIFORNIA

M-1.0

CERTIFICATE OF COMPLIANCE **CF1R-PRF-01E**

Project Name: 1-BR Apartment **Calculation Date/Time:** 2020-02-18T14:13:08-08:00 **(Page 1 of 8)**

Calculation Description: Title 24 Analysis **Input File Name:** 20-012 - ALTHEA CONCORD - LAUTERBACH (1 Bedroom).ribd19x

GENERAL INFORMATION					
01	Project Name	1-BR Apartment			
02	Run Title	Title 24 Analysis			
03	Project Location	1357 Althea Dr.			
04	City	Oxnard	05	Standards Version	2019
06	Zip code	93036	07	Software Version	EnergyPro 8.0
08	Climate Zone	6	09	Front Orientation (deg/ Cardinal)	180
10	Building Type	SingleFamily	11	Number of Dwelling Units	1
12	Project Scope	AdditionAlteration	13	Number of Bedrooms	1
14	New Cond. Floor Area (ft^2)	0	15	Number of Stories	1
16	Existing Cond. Floor Area (ft^2)	472	17	Fenestration Average U-factor	0.3
18	Total Cond. Floor Area (ft^2)	472	19	Glazing Percentage (%)	10.17%
20	ADU Bedroom Count	0	21	ADU Conditioned Floor Area	0

COMPLIANCE RESULTS	
01	Building Complies with Computer Performance
02	This building incorporates features that require field testing and/or verification by a certified HERS rater under the supervision of a CEC-approved HERS provider.
03	This building incorporates one or more Special Features shown below

ENERGY USE SUMMARY				
Energy Use (kTDV/ft^2-yr)	Standard Design	Proposed Design	Compliance Margin	Percent Improvement
Space Heating	8.16	4.68	3.48	42.6
Space Cooling	11.65	11.47	0.18	1.5
IAQ Ventilation	0	0	0	
Water Heating	37.71	38.03	-0.32	-0.8
Self Utilization Credit	n/a	0	0	n/a
Compliance Energy Total	**57.52**	**54.18**	**3.34**	**5.8**

CERTIFICATE OF COMPLIANCE **CF1R-PRF-01E**

Project Name: 1-BR Apartment **Calculation Date/Time:** 2020-02-18T14:13:08-08:00 **(Page 2 of 8)**

Calculation Description: Title 24 Analysis **Input File Name:** 20-012 - ALTHEA CONCORD - LAUTERBACH (1 Bedroom).ribd19x

REQUIRED SPECIAL FEATURES
The following are features that must be installed as condition for meeting the modeled energy performance for this computer analysis.
• New ductwork added is less than 40 ft. in length • Non-standard duct location (any location other than attic)

HERS FEATURE SUMMARY
The following is a summary of the features that must be field-verified by a certified HERS Rater as a condition for meeting the modeled energy performance for this computer analysis. Additional detail is provided in the building tables below. Registered CF2Rs and CF3Rs are required to be completed in the HERS Registry
Building-level Verifications: • Kitchen range hood Cooling System Verifications: • Verified EER • Verified SEER Heating System Verifications: • -- None -- HVAC Distribution System Verifications: • Duct Sealing required if a duct system component, plenum, or air handling unit is altered Domestic Hot Water System Verifications: • -- None --

BUILDING - FEATURES INFORMATION						
01	02	03	04	05	06	07
Project Name	Conditioned Floor Area (ft^2)	Number of Dwelling Units	Number of Bedrooms	Number of Zones	Number of Ventilation Cooling Systems	Number of Water Heating Systems
1-BR Apartment	472	1	1	1	0	1

ZONE INFORMATION						
01	02	03	04	05	06	07
Zone Name	Zone Type	HVAC System Name	Zone Floor Area (ft^2)	Avg. Ceiling Height	Water Heating System 1	Water Heating System 2
1 Bedroom Apartment	Conditioned	HVAC System1	472	9	DHW Sys 1	N/A

CERTIFICATE OF COMPLIANCE **CF1R-PRF-01E**

Project Name: 1-BR Apartment **Calculation Date/Time:** 2020-02-18T14:13:08-08:00 **(Page 3 of 8)**

Calculation Description: Title 24 Analysis **Input File Name:** 20-012 - ALTHEA CONCORD - LAUTERBACH (1 Bedroom).ribd19x

OPAQUE SURFACES										
01	02	03	04	05	06	07	08	09	10	11
Name	Zone	Construction	Azimuth	Orientation	Gross Area (ft^2)	Window and Door Area (ft2)	Tilt (deg)	Status	Verified Existing Condition	Existing Construction
Front Wall	1 Bedroom Apartment	R-15 Wall	180	Front	193.5	68	90	New	n/a	
Left Wall	1 Bedroom Apartment	R-15 Wall	270	Left	216	0	90	Existing	No	
Rear Wall	1 Bedroom Apartment	R-15 Wall	0	Back	193.5	0	90	Existing	No	
Right Wall	1 Bedroom Apartment	R-15 Wall	90	Right	216	0	90	Existing	No	
Raised Floor	1 Bedroom Apartment	R-19 Floor No Crawlspace	n/a	n/a	100	n/a	n/a	New	n/a	
Raised Floor 2	1 Bedroom Apartment	R-19 Floor No Crawlspace	n/a	n/a	372	n/a	n/a	New	n/a	

FENESTRATION / GLAZING																
01	02	03	04	05	06	07	08	09	10	11	12	13	14	15	16
Name	Type	Surface	Orientation	Azimuth	Width (ft)	Height (ft)	Mult.	Area (ft^2)	U-factor	U-factor Source	SHGC	SHGC Source	Exterior Shading	Status	Verified Existing Condition
Window	Window	Front Wall	Front	180			1	24	0.3	NFRC	0.23	NFRC	Bug Screen	New	n/a
Window 2	Window	Front Wall	Front	180			1	24	0.3	NFRC	0.23	NFRC	Bug Screen	New	n/a

OPAQUE DOORS					
01	02	03	04	05	06
Name	Side of Building	Area (ft^2)	U-factor	Status	Verified Existing Condition
Door	Front Wall	20	0.2	New	n/a

CERTIFICATE OF COMPLIANCE **CF1R-PRF-01E**

Project Name: 1-BR Apartment **Calculation Date/Time:** 2020-02-18T14:13:08-08:00 **(Page 4 of 8)**

Calculation Description: Title 24 Analysis **Input File Name:** 20-012 - ALTHEA CONCORD - LAUTERBACH (1 Bedroom).ribd19x

SLAB FLOORS								
01	02	03	04	05	06	07	08	09
Name	Zone	Area (ft2)	Perimeter (ft)	Edge Insul. R-value and Depth	Carpeted Fraction	Heated	Status	Verified Existing Condition
Slab	1 Bedroom Apartment	372	91	None	80%	No	Existing	No
Slab 2	1 Bedroom Apartment	100	91	None	80%	No	New	n/a

OPAQUE SURFACE CONSTRUCTIONS							
01	02	03	04	05	06	07	08
Construction Name	Surface Type	Construction Type	Framing	Total Cavity R-value	Interior / Exterior Continuous R-value	U-factor	Assembly Layers
R-15 Wall	Exterior Walls	Wood Framed Wall	2x4 @ 16 in. O. C.	R-15	None / None	0.095	Inside Finish: Gypsum Board Cavity / Frame: R-15 / 2x4 Exterior Finish: 3 Coat Stucco
R-19 Floor No Crawlspace	Exterior Floors	Wood Framed Floor	2x10 @ 16 in. O. C.	R-19	None / None	0.047	Floor Surface: Carpeted Floor Deck: Wood Siding/sheathing/decking Cavity / Frame: R-19 / 2x10

BUILDING ENVELOPE - HERS VERIFICATION			
01	02	03	04
Quality Insulation Installation (QII)	Quality Installation of Spray Foam Insulation	Building Envelope Air Leakage	CFM50
Not Required	Not Required	Not Required	n/a

CERTIFICATE OF COMPLIANCE **CF1R-PRF-01E**

Project Name: 1-BR Apartment **Calculation Date/Time:** 2020-02-18T14:13:08-08:00 **(Page 5 of 8)**

Calculation Description: Title 24 Analysis **Input File Name:** 20-012 - ALTHEA CONCORD - LAUTERBACH (1 Bedroom).ribd19x

WATER HEATING SYSTEMS									
01	02	03	04	05	06	07	08	09	10
Name	System Type	Distribution Type	Water Heater Name (#)	Solar Fraction (%)	Compact Distribution	HERS Verification	Status	Verified Existing Condition	Existing Water Heating System
DHW Sys 1	Domestic Hot Water (DHW)	Standard Distribution System	DHW Heater 1 (1)	0	None	n/a	New	NA	

WATER HEATERS														
01	02	03	04	05	06	07	08	09	10	11	12	13	14
Name	Heating Element Type	Tank Type	# Units	Tank Vol. (gal)	Energy Factor or Efficiency	Input Rating or Pilot	Tank Insulation R-value (Int/Ext)	Standby Loss or Recovery Eff.	1st Hr. Rating or Flow Rate	NEEA Heat Pump Brand or Model / Other	Tank Location or Ambient Condition	Status	Verified Existing Condition
DHW Heater 1	Natural Gas	Consumer Instantaneous	1	0	0.81-UEF	200000-Btu/Hr	0	n/a	n/a	n/a	n/a	New	

WATER HEATING - HERS VERIFICATION							
01	02	03	04	05	06	07	08
Name	Pipe Insulation	Parallel Piping	Compact Distribution	Compact Distribution Type	Recirculation Control	Central DHW Distribution	Shower Drain Water Heat Recovery
DHW Sys 1 - 1/1	Not Required	Not Required	Not Required	None	Not Required	Not Required	Not Required

CERTIFICATE OF COMPLIANCE **CF1R-PRF-01E**

Project Name: 1-BR Apartment **Calculation Date/Time:** 2020-02-18T14:13:08-08:00 **(Page 6 of 8)**

Calculation Description: Title 24 Analysis **Input File Name:** 20-012 - ALTHEA CONCORD - LAUTERBACH (1 Bedroom).ribd19x

SPACE CONDITIONING SYSTEMS											
01	02	03	04	05	06	07	08	09	10	11	12
Name	System Type	Heating Unit Name	Cooling Unit Name	Fan Name	Distribution Name	Required Thermostat Type	Heating Equipment Count	Cooling Equipment Count	Status	Verified Existing Condition	Existing HVAC System
HVAC System1	Heating and cooling system other	Heating Component 1	Cooling Component 1	HVAC Fan 1	Air Distribution System 1	Setback	1	1	New	No	n/a

HVAC - HEATING UNIT TYPES				
01	02	03	04	05
Name	System Type	Number of Units	Heating Efficiency Type	Efficiency
Heating Component 1	Gas wall furnace	1	AFUE	96

HVAC - COOLING UNIT TYPES							
01	02	03	04	05	06	07	08
Name	System Type	Number of Units	Efficiency EER	Efficiency SEER	Zonally Controlled	Mult-speed Compressor	HERS Verification
Cooling Component 1	Central split AC	1	12.5	15	Not Zonal	Single Speed	Cooling Component 1-hers-cool

HVAC COOLING - HERS VERIFICATION					
01	02	03	04	05	06
Name	Verified Airflow	Airflow Target	Verified EER	Verified SEER	Verified Refrigerant Charge
Cooling Component 1-hers-cool	Not Required	0	Required	Required	Not Required

CERTIFICATE OF COMPLIANCE **CF1R-PRF-01E**

Project Name: 1-BR Apartment **Calculation Date/Time:** 2020-02-18T14:13:08-08:00 **(Page 7 of 8)**

Calculation Description: Title 24 Analysis **Input File Name:** 20-012 - ALTHEA CONCORD - LAUTERBACH (1 Bedroom).ribd19x

HVAC - DISTRIBUTION SYSTEMS																
01	02	03	04	05	06	07	08	09	10	11	12	13	14	15	16
			Duct Ins. R-value		Duct Location		Surface Area								
Name	Type	Design Type	Supply	Return	Supply	Return	Supply	Return	Bypass Duct	Duct Leakage	HERS Verification	Status	Verified Existing Condition	Existing Distribution system	New Ducts 40 ft
Air Distribution System 1	Conditioned space-entirely	Non-Verified	R-6	R-6	Conditioned Zone	Conditioned Zone	n/a	n/a	No Bypass Duct	Existing (not specified)	Air Distribution System 1-hers-dist	Existing + New	No	n/a	n/a

HVAC - FAN SYSTEMS			
01	02	03	04
Name	Type	Fan Power (Watts/CFM)	Name
HVAC Fan 1	HVAC Fan	0.58	HVAC Fan 1-hers-fan

HVAC FAN SYSTEMS - HERS VERIFICATION		
01	02	03
Name	Verified Fan Watt Draw	Required Fan Efficiency (Watts/CFM)
HVAC Fan 1-hers-fan	Not Required	0

CERTIFICATE OF COMPLIANCE **CF1R-PRF-01E**

Project Name: 1-BR Apartment **Calculation Date/Time:** 2020-02-18T14:13:08-08:00 **(Page 8 of 8)**

Calculation Description: Title 24 Analysis **Input File Name:** 20-012 - ALTHEA CONCORD - LAUTERBACH (1 Bedroom).ribd19x

DOCUMENTATION AUTHOR'S DECLARATION STATEMENT	
I, I certify that this Certificate of Compliance documentation is accurate and complete.	
Documentation Author Name: Shane Judd	Documentation Author Signature: Shane Judd
Company: All-Trade Engineering	Signature Date: 02/18/2020
Address: 17 E High St.	CEA/ HERS Certification Identification (If applicable):
City/State/Zip: Moorpark, CA 93021	Phone: (805) 552-4000
RESPONSIBLE PERSON'S DECLARATION STATEMENT	
I certify the following under penalty of perjury, under the laws of the State of California: 1. I am eligible under Division 3 of the Business and Professions Code to accept responsibility for the building design identified on this Certificate of Compliance. 2. I certify that the energy features and performance specifications identified on this Certificate of Compliance conform to the requirements of Title 24, Part 1 and Part 6 of the California Code of Regulations. 3. The building design features or system design features identified on this Certificate of Compliance are consistent with the information provided on other applicable compliance documents, worksheets, calculations, plans and specifications submitted to the enforcement agency for approval with this building permit application.	
Responsible Designer Name: Shane Judd	Responsible Designer Signature: Shane Judd
Company: All-Trade Engineering	Date Signed: 02/18/2020
Address: 17 E High St.	License: C70991
City/State/Zip: Moorpark, CA 93021	Phone: (805) 552-4000

NOTICE: This certificate has been generated by California Energy Registry, Inc. ("Cal Energy") using information uploaded by third parties not affiliated or related to Cal Energy. Therefore, Cal Energy is not responsible for, and cannot guarantee,

LAUTERBACH & ASSOCIATES
ARCHITECTS INC.
David C. Kesterson, Architect • Ilona Scott, Architect • Mark S. Pettit, Architect
300 MONTGOMERY AVENUE, OXNARD, CALIFORNIA 93036 | 805-988-0912 | FAX 805-981-4510 | www.la-arch.com

REGISTERED PROFESSIONAL ENGINEER SHANE DENNIS JUDD No. M54632 MECHANICAL STATE OF CALIFORNIA

REGISTERED PROFESSIONAL ENGINEER SHANE DENNIS JUDD No. C70991 CIVIL STATE OF CALIFORNIA

ALTHEA COURT APARTMENTS

1357 ALTHEA DRIVE
OXNARD, CA, 93036

CITY OF OXNARD HOUSING AUTHORITY

435 S. D STREET
OXNARD, CALIFORNIA 93030

NO	DESCRIPTION	DATE
1	SUBMIT	02-26-2020

ISSUE

JOB NO. 20-190209

DRAWN BY:
CHECKED BY:
PROJECT MANAGER:
PRINT DATE: 2/15/19 8:36:51 AM

TITLE 24 CALCS

N-1

THESE DRAWINGS AND SPECIFICATIONS ARE THE PROPERTY AND COPYRIGHT OF LAUTERBACH & ASSOCIATES. ALL RIGHTS RESERVED, AND SHALL NOT BE USED ON ANY OTHER WORK OR PROJECT EXCEPT BY WRITTEN AGREEMENT WITH LAUTERBACH & ASSOCIATES. WRITTEN DIMENSIONS SHALL TAKE PRECEDENCE OVER SCALED DIMENSIONS AND SHALL BE VERIFIED ON THE JOB SITE. ANY DISCREPANCY SHALL BE BROUGHT TO THE NOTICE OF LAUTERBACH & ASSOCIATES PRIOR TO COMMENCEMENT OF ANY WORK.

CERTIFICATE OF COMPLIANCE **CF1R-PRF-01E**

Project Name: 2-BR Apartment **Calculation Date/Time:** 2020-02-18T13:29:45-08:00 **(Page 1 of 9)**

Calculation Description: Title 24 Analysis **Input File Name:** 20-012 - ALTHEA APARTMENTS - LAUTERBACH.ribd19x

GENERAL INFORMATION					
01	Project Name	2-BR Apartment			
02	Run Title	Title 24 Analysis			
03	Project Location	1357 Althea Dr.			
04	City	Oxnard	05	Standards Version	2019
06	Zip code	93036	07	Software Version	EnergyPro 8.0
08	Climate Zone	6	09	Front Orientation (deg/ Cardinal)	180
10	Building Type	SingleFamily	11	Number of Dwelling Units	1
12	Project Scope	AdditionAlteration	13	Number of Bedrooms	1
14	New Cond. Floor Area (ft^2)	0	15	Number of Stories	1
16	Existing Cond. Floor Area (ft^2)	1018	17	Fenestration Average U-factor	0.3
18	Total Cond. Floor Area (ft^2)	1018	19	Glazing Percentage (%)	15.23%
20	ADU Bedroom Count	0	21	ADU Conditioned Floor Area	0

COMPLIANCE RESULTS	
01	Building Complies with Computer Performance
02	This building incorporates features that require field testing and/or verification by a certified HERS rater under the supervision of a CEC-approved HERS provider.
03	This building incorporates one or more Special Features shown below

ENERGY USE SUMMARY				
Energy Use (kTDV/ft^2-yr)	Standard Design	Proposed Design	Compliance Margin	Percent Improvement
Space Heating	18.81	15.16	3.65	19.4
Space Cooling	4.52	3.85	0.67	14.8
IAQ Ventilation	0	0	0	
Water Heating	26.04	26.04	0	0
Self Utilization Credit	n/a	0	0	n/a
Compliance Energy Total	**49.37**	**45.05**	**4.32**	**8.8**

CERTIFICATE OF COMPLIANCE **CF1R-PRF-01E**

Project Name: 2-BR Apartment **Calculation Date/Time:** 2020-02-18T13:29:45-08:00 **(Page 2 of 9)**

Calculation Description: Title 24 Analysis **Input File Name:** 20-012 - ALTHEA APARTMENTS - LAUTERBACH.ribd19x

REQUIRED SPECIAL FEATURES

The following are features that must be installed as condition for meeting the modeled energy performance for this computer analysis.

- New ductwork added is less than 40 ft. in length
- Non-standard duct location (any location other than attic)

HERS FEATURE SUMMARY

The following is a summary of the features that must be field-verified by a certified HERS Rater as a condition for meeting the modeled energy performance for this computer analysis. Additional detail is provided in the building tables below. Registered CF2Rs and CF3Rs are required to be completed in the HERS Registry

Building-level Verifications:
- Kitchen range hood

Cooling System Verifications:
- Verified EER
- Verified SEER

Heating System Verifications:
- -- None --

HVAC Distribution System Verifications:
- Duct Sealing required if a duct system component, plenum, or air handling unit is altered

Domestic Hot Water System Verifications:
- -- None --

BUILDING - FEATURES INFORMATION

01	02	03	04	05	06	07
Project Name	Conditioned Floor Area (ft^2)	Number of Dwelling Units	Number of Bedrooms	Number of Zones	Number of Ventilation Cooling Systems	Number of Water Heating Systems
2-BR Apartment	1018	1	1	1	0	1

ZONE INFORMATION

01	02	03	04	05	06	07
Zone Name	Zone Type	HVAC System Name	Zone Floor Area (ft^2)	Avg. Ceiling Height	Water Heating System 1	Water Heating System 2
2 Bedroom Apartment	Conditioned	HVAC System1	1018	9	DHW Sys 1	N/A

CERTIFICATE OF COMPLIANCE **CF1R-PRF-01E**

Project Name: 2-BR Apartment **Calculation Date/Time:** 2020-02-18T13:29:45-08:00 **(Page 3 of 9)**

Calculation Description: Title 24 Analysis **Input File Name:** 20-012 - ALTHEA APARTMENTS - LAUTERBACH.ribd19x

OPAQUE SURFACES

01	02	03	04	05	06	07	08	09	10	11
Name	Zone	Construction	Azimuth	Orientation	Gross Area (ft^2)	Window and Door Area (ft2)	Tilt (deg)	Status	Verified Existing Condition	Existing Construction
Front Wall	2 Bedroom Apartment	R-15 Wall	180	Front	193.5	0	90	Existing	No	
Left Wall	2 Bedroom Apartment	R-15 Wall	270	Left	171	0	90	Existing	No	
Rear Wall	2 Bedroom Apartment	R-15 Wall	0	Back	193.5	51	90	Existing	No	
Right Wall	2 Bedroom Apartment	R-15 Wall	90	Right	171	20	90	Existing	No	
Front Wall 2	2 Bedroom Apartment	R-15 Wall	180	Front	193.5	48	90	Existing	No	
Left Wall 2	2 Bedroom Apartment	R-15 Wall	270	Left	342	0	90	Existing	No	
Rear Wall 2	2 Bedroom Apartment	R-15 Wall	0	Back	193.5	32	90	Existing	No	
Right Wall 2	2 Bedroom Apartment	R-15 Wall	90	Right	342	24	90	Existing	No	
Roof	2 Bedroom Apartment	R-30 Roof Attic	n/a	n/a	642	n/a	n/a	Existing	No	
Raised Floor	2 Bedroom Apartment	R-19 Floor No Crawlspace	n/a	n/a	1018	n/a	n/a	Existing	No	

ATTIC

01	02	03	04	05	06	07	08	09	10
Name	Construction	Type	Roof Rise (x in 12)	Roof Reflectance	Roof Emittance	Radiant Barrier	Cool Roof	Status	Verified Existing Condition
Attic 2 Bedroom Apartment	Attic Roof2 Bedroom Apartment	Ventilated	0	0.1	0.85	Yes	No	Existing	No

CERTIFICATE OF COMPLIANCE **CF1R-PRF-01E**

Project Name: 2-BR Apartment **Calculation Date/Time:** 2020-02-18T13:29:45-08:00 **(Page 4 of 9)**

Calculation Description: Title 24 Analysis **Input File Name:** 20-012 - ALTHEA APARTMENTS - LAUTERBACH.ribd19x

FENESTRATION / GLAZING

01	02	03	04	05	06	07	08	09	10	11	12	13	14	15	16
Name	Type	Surface	Orientation	Azimuth	Width (ft)	Height (ft)	Mult.	Area (ft^2)	U-factor	U-factor Source	SHGC	SHGC Source	Exterior Shading	Status	Verified Existing Condition
Slider	Window	Rear Wall	Back	0			1	51	0.3	NFRC	0.23	NFRC	Bug Screen	Existing	No
Window	Window	Front Wall 2	Front	180			1	16	0.3	NFRC	0.23	NFRC	Bug Screen	New	n/a
Window 2	Window	Front Wall 2	Front	180			1	16	0.3	NFRC	0.23	NFRC	Bug Screen	New	n/a
Window 3	Window	Front Wall 2	Front	180			1	16	0.3	NFRC	0.23	NFRC	Bug Screen	New	n/a
Window 4	Window	Rear Wall 2	Back	0			1	16	0.3	NFRC	0.23	NFRC	Bug Screen	New	n/a
Window 5	Window	Rear Wall 2	Back	0			1	16	0.3	NFRC	0.23	NFRC	Bug Screen	New	n/a
Window 6	Window	Right Wall 2	Right	90			1	24	0.3	NFRC	0.23	NFRC	Bug Screen	New	n/a

OPAQUE DOORS

01	02	03	04	05	06
Name	Side of Building	Area (ft^2)	U-factor	Status	Verified Existing Condition
Door	Right Wall	20	0.2	Existing	No

SLAB FLOORS

01	02	03	04	05	06	07	08	09
Name	Zone	Area (ft2)	Perimeter (ft)	Edge Insul. R-value and Depth	Carpeted Fraction	Heated	Status	Verified Existing Condition
Slab	2 Bedroom Apartment	1018	91	None	80%	No	Existing	No

CERTIFICATE OF COMPLIANCE **CF1R-PRF-01E**

Project Name: 2-BR Apartment **Calculation Date/Time:** 2020-02-18T13:29:45-08:00 **(Page 5 of 9)**

Calculation Description: Title 24 Analysis **Input File Name:** 20-012 - ALTHEA APARTMENTS - LAUTERBACH.ribd19x

OPAQUE SURFACE CONSTRUCTIONS

01	02	03	04	05	06	07	08
Construction Name	Surface Type	Construction Type	Framing	Total Cavity R-value	Interior / Exterior Continuous R-value	U-factor	Assembly Layers
R-15 Wall	Exterior Walls	Wood Framed Wall	2x4 @ 16 in. O. C.	R-15	None / None	0.095	Inside Finish: Gypsum Board Cavity / Frame: R-15 / 2x4 Exterior Finish: 3 Coat Stucco
Attic Roof2 Bedroom Apartment	Attic Roofs	Wood Framed Ceiling	2x4 @ 24 in. O. C.	R-0	None / None	0.644	Roofing: Light Roof (Asphalt Shingle) Roof Deck: Wood Siding/sheathing/decking Cavity / Frame: no insul. / 2x4
R-30 Roof Attic	Ceilings (below attic)	Wood Framed Ceiling	2x4 @ 24 in. O. C.	R-30	None / None	0.032	Over Ceiling Joists: R-20.9 insul. Cavity / Frame: R-9.1 / 2x4 Inside Finish: Gypsum Board
R-19 Floor No Crawlspace	Exterior Floors	Wood Framed Floor	2x10 @ 16 in. O. C.	R-19	None / None	0.047	Floor Surface: Carpeted Floor Deck: Wood Siding/sheathing/decking Cavity / Frame: R-19 / 2x10

BUILDING ENVELOPE - HERS VERIFICATION

01	02	03	04
Quality Insulation Installation (QII)	Quality Installation of Spray Foam Insulation	Building Envelope Air Leakage	CFM50
Not Required	Not Required	Not Required	n/a

CERTIFICATE OF COMPLIANCE **CF1R-PRF-01E**

Project Name: 2-BR Apartment **Calculation Date/Time:** 2020-02-18T13:29:45-08:00 **(Page 6 of 9)**

Calculation Description: Title 24 Analysis **Input File Name:** 20-012 - ALTHEA APARTMENTS - LAUTERBACH.ribd19x

WATER HEATING SYSTEMS

01	02	03	04	05	06	07	08	09	10
Name	System Type	Distribution Type	Water Heater Name (#)	Solar Fraction (%)	Compact Distribution	HERS Verification	Status	Verified Existing Condition	Existing Water Heating System
DHW Sys 1	Domestic Hot Water (DHW)	Standard Distribution System	DHW Heater 1 (1)	0	None	n/a	Existing	No	

WATER HEATING - HERS VERIFICATION

01	02	03	04	05	06	07	08
Name	Pipe Insulation	Parallel Piping	Compact Distribution	Compact Distribution Type	Recirculation Control	Central DHW Distribution	Shower Drain Water Heat Recovery
DHW Sys 1 - 1/1	Not Required	Not Required	Not Required	None	Not Required	Not Required	Not Required

SPACE CONDITIONING SYSTEMS

01	02	03	04	05	06	07	08	09	10	11	12
Name	System Type	Heating Unit Name	Cooling Unit Name	Fan Name	Distribution Name	Required Thermostat Type	Heating Equipment Count	Cooling Equipment Count	Status	Verified Existing Condition	Existing HVAC System
HVAC System1	Heating and cooling system other	Heating Component 1	Cooling Component 1	HVAC Fan 1	Air Distribution System 1	Setback	1	1	New	No	n/a

HVAC - HEATING UNIT TYPES

01	02	03	04	05
Name	System Type	Number of Units	Heating Efficiency Type	Efficiency
Heating Component 1	Gas wall furnace	1	AFUE	96.2

CERTIFICATE OF COMPLIANCE **CF1R-PRF-01E**

Project Name: 2-BR Apartment **Calculation Date/Time:** 2020-02-18T13:29:45-08:00 **(Page 7 of 9)**

Calculation Description: Title 24 Analysis **Input File Name:** 20-012 - ALTHEA APARTMENTS - LAUTERBACH.ribd19x

HVAC - COOLING UNIT TYPES

01	02	03	04	05	06	07	08
Name	System Type	Number of Units	Efficiency EER	Efficiency SEER	Zonally Controlled	Multi-speed Compressor	HERS Verification
Cooling Component 1	Central split AC	1	12.5	15	Not Zonal	Single Speed	Cooling Component 1-hers-cool

HVAC COOLING - HERS VERIFICATION

01	02	03	04	05	06
Name	Verified Airflow	Airflow Target	Verified EER	Verified SEER	Verified Refrigerant Charge
Cooling Component 1-hers-cool	Not Required	0	Required	Required	Not Required

HVAC - DISTRIBUTION SYSTEMS

01	02	03	04	05	06	07	08	09	10	11	12	13	14	15	16
			Duct Ins. R-value		Duct Location		Surface Area								
Name	Type	Design Type	Supply	Return	Supply	Return	Supply	Return	Bypass Duct	Duct Leakage	HERS Verification	Status	Verified Existing Condition	Existing Distribution system	New Ducts 40 ft
Air Distribution System 1	Conditioned space-entirely	Non-Verified	R-6	R-6	Conditioned Zone	Conditioned Zone	n/a	n/a	No Bypass Duct	Existing (not specified)	Air-Distribution System 1-hers-dist	Existing + New	No	n/a	n/a

HVAC - FAN SYSTEMS

01	02	03	04
Name	Type	Fan Power (Watts/CFM)	Name
HVAC Fan 1	HVAC Fan	0.58	HVAC Fan 1-hers-fan

CERTIFICATE OF COMPLIANCE **CF1R-PRF-01E**

Project Name: 2-BR Apartment **Calculation Date/Time:** 2020-02-18T13:29:45-08:00 **(Page 8 of 9)**

Calculation Description: Title 24 Analysis **Input File Name:** 20-012 - ALTHEA APARTMENTS - LAUTERBACH.ribd19x

HVAC FAN SYSTEMS - HERS VERIFICATION

01	02	03
Name	Verified Fan Watt Draw	Required Fan Efficiency (Watts/CFM)
HVAC Fan 1-hers-fan	Not Required	0

CERTIFICATE OF COMPLIANCE **CF1R-PRF-01E**

Project Name: 2-BR Apartment **Calculation Date/Time:** 2020-02-18T13:29:45-08:00 **(Page 9 of 9)**

Calculation Description: Title 24 Analysis **Input File Name:** 20-012 - ALTHEA APARTMENTS - LAUTERBACH.ribd19x

DOCUMENTATION AUTHOR'S DECLARATION STATEMENT

I. I certify that this Certificate of Compliance documentation is accurate and complete.

Documentation Author Name: Shane Judd	Documentation Author Signature: Shane Judd
Company: All-Trade Engineering	Signature Date: 02/18/2020
Address: 17 E High St.	CEA/ HERS Certification Identification (if applicable):
City/State/Zip: Moorpark, CA 93021	Phone: (805) 552-4000

RESPONSIBLE PERSON'S DECLARATION STATEMENT

I certify the following under penalty of perjury, under the laws of the State of California:

1. I am eligible under Division 3 of the Business and Professions Code to accept responsibility for the building design identified on this Certificate of Compliance.
2. I certify that the energy features and performance specifications identified on this Certificate of Compliance conform to the requirements of Title 24, Part 1 and Part 6 of the California Code of Regulations.
3. The building design features or system design features identified on this Certificate of Compliance are consistent with the information provided on other applicable compliance documents, worksheets, calculations, plans and specifications submitted to the enforcement agency for approval with this building permit application.

Responsible Designer Name: Shane Judd	Responsible Designer Signature: Shane Judd
Company: All-Trade Engineering	Date Signed: 02/18/2020
Address: 17 E High St.	License: C70991
City/State/Zip: Moorpark, CA 93021	Phone: (805) 552-4000

NOTICE: This certificate has been generated by California Energy Registry, Inc. ("Cal Energy") using information uploaded by third parties not affiliated or related to Cal Energy. Therefore, Cal Energy is not responsible for, and cannot guarantee,

THESE DRAWINGS AND SPECIFICATIONS ARE THE PROPERTY AND COPYRIGHT OF LAUTERBACH & ASSOCIATES. ALL RIGHTS RESERVED, AND SHALL NOT BE USED ON ANY OTHER WORK OR PROJECT EXCEPT BY WRITTEN AGREEMENT WITH LAUTERBACH & ASSOCIATES. WRITTEN DIMENSIONS SHALL TAKE PRECEDENCE OVER SCALED DIMENSIONS AND SHALL BE VERIFIED ON THE JOB SITE. ANY DISCREPANCY SHALL BE BROUGHT TO THE NOTICE OF LAUTERBACH & ASSOCIATES PRIOR TO COMMENCEMENT OF ANY WORK.

LAUTERBACH & ASSOCIATES
ARCHITECTS INC.
David C. Kesterson, Architect • Ilona Scott, Architect • Mark S. Pettit, Architect
300 MONTGOMERY AVENUE, OXNARD, CALIFORNIA 93036 | 805-988-0912 | FAX 805-981-4510 | www.la-arch.com

REGISTERED PROFESSIONAL ENGINEER SHANE DENNIS JUDD No. M24632 MECHANICAL STATE OF CALIFORNIA

REGISTERED PROFESSIONAL ENGINEER SHANE DENNIS JUDD No. C70991 CIVIL STATE OF CALIFORNIA

ALTHEA COURT APARTMENTS

1357 ALTHEA DRIVE
OXNARD, CA, 93036

CITY OF OXNARD HOUSING AUTHORITY

435 S. D STREET
OXNARD, CALIFORNIA 93030

NO.	DESCRIPTION	DATE
1	SUBMIT	02-26-2020

ISSUE

JOB NO. 20-190209

DRAWN BY:
CHECKED BY:
PROJECT MANAGER:
PRINT DATE: 2/15/19 8:36:51 AM

TITLE 24 CALCS

N-2

PLUMBING NOTES

1. All work shall be in accordance and comply with the latest applicable city ordinance and the 2019 CPC.

2. It is the intent of these drawings that this be a complete plumbing installation. Any apparent errors shall be brought to the attention of the designer and/or tenant prior to proceeding.

3.. Contractor shall verify all existing conditions versus new installations to assure proper new installations can be completed properly prior to proceeding.

4. These plans shall be used only after approvals and permits have been secured by the proper jurisdiction of the department of building and safety.

5. All drawings and details are provided as a diagrammatic version of the proposed work. The contractor shall be held liable and responsible for all field verifications of equipment, materials, and installations.

6. Contractor shall verify all equipment is installed in accordance with manufacturer's recommendations and local code requirements prior to any installations.

7. Provide a reduced pressure backflow preventer for all soda lines.

8. Provide a backflow protection device for any equipment directly connected the water supply such as ice makers and coffee machines.

9. Penetrations of fire-resistive walls, floor-ceilings and roof ceilings shall be protected as required in CBC Section 713.

10. Exhaust outlets and plumbing vents shall terminate not less than 10' from or at least 3' above any openable window, door opening, air intake, vent shaft, adjacent building, and property line.

11. Overflow drains having the same size as roof drains and on independent drain lines are required. In lieu of this, overflow scuppers, 4" minimum high with a width equal to the circumference of the roof drain may be provided. Overflow system shall have inlets located two inches above the roof low points. [§ 1101.11 CPC].

12. All floor drains and floor sinks shall be installed with trap primers as required by code and jurisdictional requirements whether indicated on drawings or not.

13. All fixtures shall be provided as water saving devices per the following minimum requirements:
Water Closet: 1.28 gpf Urinal: 0.5 gpf Lavatory Faucet: 0.5 gpm Sink Faucet: 2.2 gpm Showerhead: 2.0 gpm

14. Waste and vent piping shall slope a minimum of 2%. Domestic piping shall slope towards its origin min 2%.

15. Pipes shall not come in direct contact with hangers. Furnish and install isolators at each pipe hanger and pipe support for cold water piping.

16. Insulation around hot water piping shall enter through hangers. Install approved insulation protection shield at each such penetration.

17. Valves shall be bronze body two piece ball valves rated to 600 psi working pressure full port with adjustable packing gland. Extend lever handle for hot water piping. Solder or thread ends as required.

18. Install above ground cleanouts at each change in direction of piping greater than 45 degrees, at minimum of 50' for piping 4" and smaller and 100' for larger piping. Cleanouts shall be full size of pipe unless otherwise indicated on the drawings: extended to surface of wall or floor with 45 degree fitting and closed with bronze flush, countersunk plugs. Install floor and wall cleanout covers for concealed piping.

19. Install flashing sleeves on stacks passing through the roof. Secure over stack flashing in accordance with manufacturer's instructions. Vent stacks and service lines through roof and decks shall be flashed with 4 lb. or heavier sheet lead, in one piece 10" skirt, 5" boot, with suitable counter-flashing assembly.

20. Connections between dissimilar metals shall be installed by means of an approved di-electric fitting.

21. Completely cover the pipe openings for all piping passing through walls, floor and ceiling with chrome plated, stamped steel, hinged, split ring escutcheons with set screw. Piping penetrating rated wall or floor construction shall be set in UL fire rated sleeve/coupling penetrators.

22. Materials: Sanitary drainage, vent, and storm water piping above grade shall be standard weight cast iron soil pipe and fittings with stainless steel couplings with neoprene gaskets. Sanitary drainage below grade to 5' outside of building shall be schedule 40 ABS or standard weight cast iron soil pipe fittings with extra heavy cast iron couplings with neoprene gaskets. Yard piping beyond 5' outside of building shall be either vitrified clay, cast iron, schedule 40 ABS or PVC as required by local authorities. Storm drainage piping below grade shall be standard weight cast iron soil pipe and fittings with extra heavy cast iron couplings with neoprene gaskets. Rectangular piping shall be Alhambra Foundry cast iron pipe and adapters. A470 series pipe with A480 series adapters.

Water system above ground piping shall be Type 'L' copper tubing with wrought copper fittings with 95-5 soldered joints. Water system piping below grade shall be Type 'K' copper with sweated connections. Piping shall be laid in a bed of sand and shall be coated or wrapped in an approved manner.

Condensate piping shall be Type 'L' copper with wrought copper fittings with 95-5 (Tin Antimony) soldered joints.

Gas piping shall be schedule 40 black steel with extra heavy malleable iron screwed fittings. Gas piping which is exposed to weather shall be schedule 40 galvanized steel with extra heavy galvanized malleable iron fittings. Buried piping shall be factory wrapped or coated in an approved manner.

Hangers and supports:	Max. Horiz. Spacing	Max Vert. Spacing	Min. Rod Size
Cast Iron Pipe	5 ft.	15 ft.	3/8"
Cu. Tubing 1.5" and smaller	6 ft.	10 ft.	3/8"
Cu. Tubing 2" and larger	10 ft.	10 ft.	3/8"

23. Supports and hangers are to be provided to properly support, secure and align piping and to meet conditions. Provide seismic bracing for hangers and supports supporting piping. Comply with the latest edition of the Sheet Metal and Air Conditioning Contractors National Association Inc. Seismic Restraint Manual as approved by ANSI.

24. Provide and install a 1" high manufactured plastic valve tag at each valve, cock, and control device in the plumbing system. Each tag shall be individually numbered, and shall identify the system being served, I.E. CW = Cold Water, HW = Hot Water, G = Gas. Fasten each tag with a standard solid brass chain.

25. Provide and install a water hammer arrestor on each branch serving plumbing equipment with quick closing, self-closing or solenoid valves. Arrestors shall be sized and located in accordance with the manufacturer's recommendations and shall be fabricated of Type 'K' copper. A piston shall provide permanent mechanical barrier between fluid and pre-load air charge. The arrestor shall be FDA approved for use in potable water systems and shall be fully guaranteed for the life of the system.

26. Where metallic pipelines penetrate concrete structures such as building floors or walls, use plastic sleeves, rubber seals, or approved dielectric material to prevent pipe contact with the concrete and reinforcing steel. On all pipe, coat bare steel appurtenances such as bolts, joint hardnesses, or flexible couplings with coal tar or elastomeric based mastic, coal tar epoxy, moldable sealant, wax tape or approved equivalent.

27. Piping shall not come in direct contact with structure. Isolate piping by means of resilient sleeves, mounts, or minimum ¼" approved resilient material.

28. Earthquake actuated automatic gas shutoff valve shall be installed and conform with the appropriate California and ANSI standards as well as all authorities having jurisdiction.

29. Provide an approved type pressure regulator set at 80 psi when local water pressure is in excess of 80 psi. CPC, Sec. 608.2

30. Water closet bowls used for public use shall be elongated in design and equipped with an open front seat. CPC, Sec. 408.1.

31. Controls for an accessible water closet shall be operable with one hand and shall not require tight grasping, pinching or twisting. Controls shall be mounted on the wide side of the toilet compartment space no more than 44 inches above the floor. CBC, Sec. 1115B.4.5

32. In seismic design categories C, D, E & F water heaters shall be strapped within the upper 1/3 and lower 1/3 of its vertical dimension. The lower strap shall be a minimum of 4 inches above the controls. CPC, Sec. 508.2.

33. WATER SUPPLY TESTING PARAMETERS – Upon completion of a section or of the entire hot and cold water supply system, it shall be tested and proved tight under a water pressure not less than 100 psi. The water used for tests shall be obtained from a potable source of supply. The piping shall withstand the test without leaking for a period of not less than 15 minutes.

34. WASTE LINE TESTING PARAMETERS – The piping of the plumbing, drainage, and venting systems shall be tested with water. The water test shall be applied to the drainage and vent systems either in its entirety or in sections. All openings in the piping shall be tightly closed, except the highest opening, and the system filled with water to point of overflow. No section shall be tested with less than 10 ft. head of water. The water shall be kept in the system, or in the portion under test, for at least fifteen minutes before inspection starts.

35. GAS LINE TESTING PARAMETERS – The piping of the gas system shall be tested to 1.5 times the maximum working pressure per CMC 1316.3 or CPC 1214.3. Required pressure tests of ten psi or less shall be performed with gauges of one-tenth of a pound incrementation or less. CPC 319.1.

36. Approved metallic water line connectors shall be used from shutoffs to plumbing fixtures. Rubber and plastics shall not be used.

37. All electrical, mechanical, and plumbing fixtures shall be elevated at least to the lowest finished floor of the habitable and non-habitable area.

These drawings are the instruments of service and are the property of ALL-TRADE ENGINEERING. All designs and other information contained on these drawings are for use on the specified project and shall not be used on other projects, or for additions to this project, or for completion of this project by others without first obtaining the expressed written permission and consent of ALL-TRADE ENGINEERING. These drawings shall not be reproduced, changed or copied in any form or manner whatsoever, nor are they to be assigned to any third party without said written permission and consent. All designs and information contained in these drawings are based on information provided by the client. ALL-TRADE ENGINEERING has relied solely on said client information in the preparation of the designs and other information contained on these drawings. ALL-TRADE ENGINEERING assumes no responsibility for any work performed based on said information. The designs and other information contained on these drawings may be subject to modifications as required by additional information including, but not limited to, final boundary survey, survey of as-built conditions, government agency input, program modifications, etc. These plans are only valid for six months from the plot date due to Code changes, industry standards, and site conditions.

TABLE 610.4
FIXTURE UNIT TABLE FOR DETERMINING WATER PIPE AND METER SIZES

METER AND STREET SERVICE (inches)	BUILDING SUPPLY AND BRANCHES (inches)	MAXIMUM ALLOWABLE LENGTH (feet) 40	60	80	100	150	200	250	300	400	500	600	700	800	900	1000
PRESSURE RANGE – 46 to 60 psi[1]																
¾	½[2]	7	7	6	5	4	3	2	2	1	1	1	0	0	0	0
¾	¾	20	20	19	17	14	11	9	8	6	5	4	4	3	3	3
¾	1	39	39	36	33	28	23	21	19	17	14	12	10	9	8	8
1	1	39	39	39	36	30	25	23	20	18	15	12	10	9	8	8
¾	1¼	39	39	39	39	39	39	34	32	27	25	22	19	19	17	16
1	1¼	78	78	76	67	52	44	39	36	30	27	24	20	19	17	16
1½	1¼	78	78	78	78	66	52	44	39	33	29	24	20	19	17	16
1	1½	85	85	85	85	85	85	80	67	55	49	41	37	34	32	30
1½	1½	151	151	151	151	128	105	90	78	62	52	42	38	35	32	30
2	1½	151	151	151	151	150	117	98	84	67	55	42	38	35	32	30
1	2	85	85	85	85	85	85	85	85	85	85	85	85	85	83	80
1½	2	370	370	340	318	272	240	220	198	170	150	135	123	110	102	94
2	2	370	370	370	370	368	318	280	250	205	165	142	123	110	102	94
2	2½	654	640	610	580	535	500	470	440	400	365	335	315	285	267	250

PIPE SIZING per FIXTURE UNIT LOAD

	CW FT	HW FT
1/2"	4	1
3/4"	14	6
1"	30	15
1-1/4"	52	28
1-1/2"	85	48
2"	187	120

HW 5 FPS MAX
CW 8 FPS MAX

GAS SIZING TABLE
TDL=100'

	CFH	MBH
1/2"	50	55
3/4"	104	114
1"	195	214
1-1/4"	400	440
1-1/2"	600	660
2"	1160	1216

FLUID TEMPERATURE RANGE (°F)	CONDUCTIVITY RANGE (in Btu-inch per hour per square foot per °F)	INSULATION MEAN RATING TEMPERATURE (°F)	NOMINAL PIPE DIAMETER (in inches) < 1	1 to <1.5	1.5 to < 4	4 to < 8	8 and larger
			INSULATION THICKNESS REQUIRED (in inches)				
Above 350	0.32-0.34	250	4.5	5.0	5.0	5.0	5.0
251-350	0.29-0.32	200	3.0	4.0	4.5	4.5	4.5
201-250	0.27-0.30	150	2.5	2.5	2.5	3.0	3.0
141-200	0.25-0.29	125	1.5	1.5	2.0	2.0	2.0
105-140	0.22-0.28	100	1.0	1.5	1.5	1.5	1.5

*** NOTE ***
CONTRACTOR TO VERIFY EXACT SIZE, SLOPE AND LOCATION OF ALL EXISTING UTILITIES ON-SITE PRIOR TO CONSTRUCTION

PLUMBING LEGEND

Symbol	Description
— — — # — — —	VENT LINE & SIZE
—— # ——	WASTE LINE & SIZE (BUILDING SEWER SHALL BE LAID IN A FIRM BED OF SAND)
—GW— # —GW—	GREASE WASTE LINE & SIZE (BUILDING SEWER SHALL BE LAID IN A FIRM BED OF SAND)
—— #(#) ——	HOT WATER SUPPLY LINE SIZE(WSFU)
— – #(#) – —	COLD WATER SUPPLY LINE SIZE (WSFU)
—FCW— #(#) —FCW—	FILTERED COLD WATER SUPPLY LINE SIZE (WSFU)
—G— #(#) —G—	GAS PIPING SIZE (MBH)
	VENT LINE BELOW FLOOR
	HOT WATER SUPPLY LINE BELOW SLAB
	COLD WATER SUPPLY LINE BELOW SLAB
	CLEANOUT
	DWV, HW, CW RISER
	SHUT-OFF VALVE
	POINT OF CONNECTION (VIF)
(VIF)	VERIFY IN FIELD

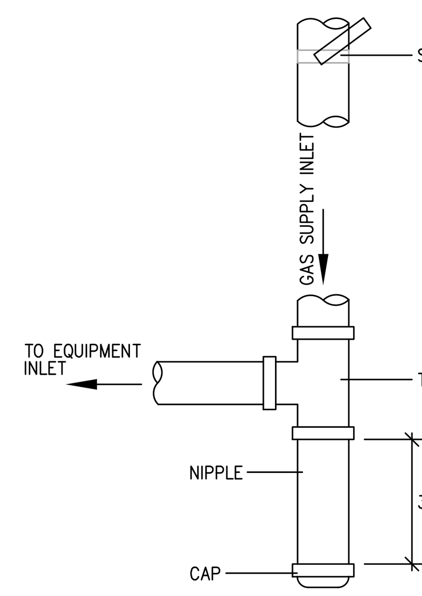

** NOTE **
SEDIMENT TRAP SHALL BE INSTALLED DOWNSTREAM OF THE EQUIPMENT ISOLATION VALVE AND UPSTREAM OF ALL OTHER FUEL GAS SYSTEM COMPONENTS.

NO SCALE — GAS PIPING - SEDIMENT TRAP — 1 / P-0

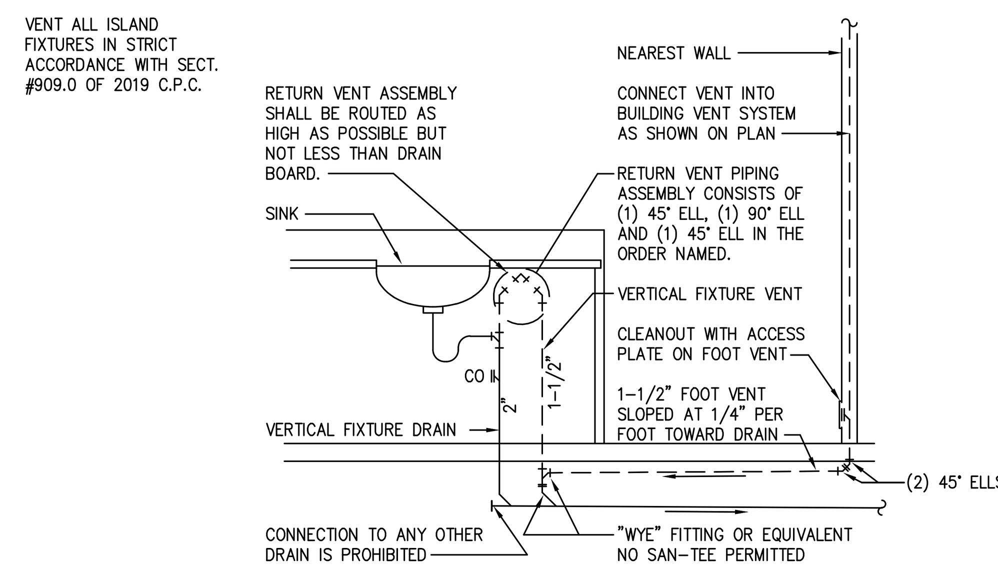

NO SCALE — ISLAND SINK WASTE / VENT PIPING — 2 / P-0

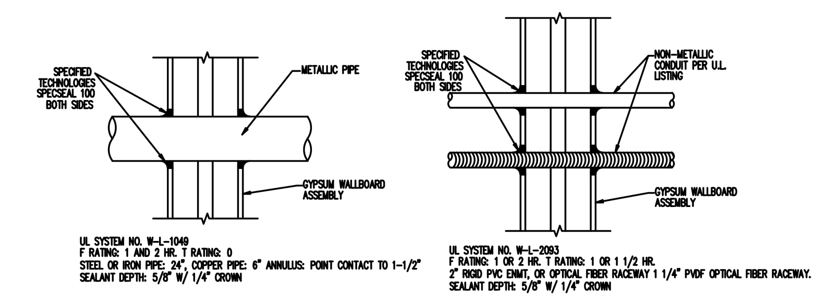

NOTE:
INSTALL ALL MANUF. PRODUCTS IN ACCORDANCE W/ THEIR LISTED AND APPROVED TESTED ASSEMBLIES. TESTED ASSEMBLIES HAVE PRIORITY O/ ANY INFORMATION SHOWN OR NOTED HEREWITH

THIS IS AN ABBREVIATED DESCRIPTION OF THE INSTALLATION. SEE SPECIFICATIONS OR OBTAIN U.L. LISTED ASSEMBLIES INSTALLATION REQUIREMENTS FOR COMPLETE DESCRIPTION OF INSTALLATION & INSTALL ACCORDINGLY.

PARTIAL PENETRATIONS SHALL BE SEALED IN THE SAME FASHION AT EACH PENETRATION POINT.

RATED PENETRATIONS (TYP)

NO SCALE — RATED PENETRATIONS — 2 / P-3

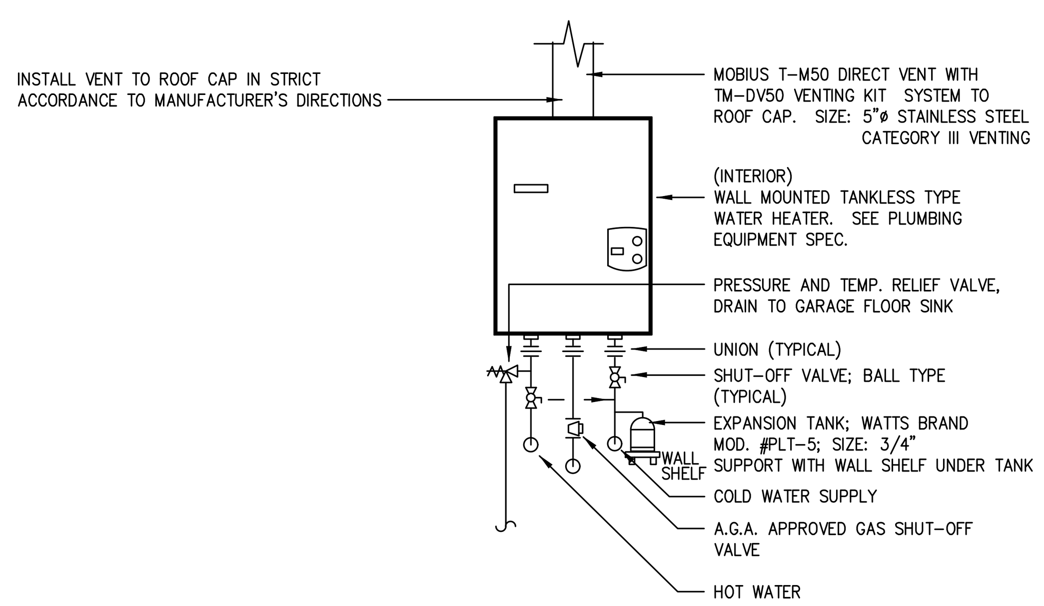

NO SCALE — TANKLESS WATER HEATER (INDOOR) — 3 / P-0

PLUMBING FIXTURE SCHEDULE

CALL OUT	FIXTURE TYPE	GENERAL SPEC., MAKE & MODEL	LOCATION	CW BRANCH SIZE	HW BRANCH SIZE	W BRANCH SIZE	V BRANCH SIZE	REMARKS
WC	WATER CLOSET	FLOOR MOUNTED 1.28 GPF TANK TYPE AMERICAN STANDARD ACCESS PRO 215AG	RESTROOMS	3/4"	--	3"	2"	PROVIDE W/ELONGATED OPEN FACE SEAT LESS COVER
LAV	LAVATORY	WALL MOUNTED FIXTURE W/4"o.c. SINGLE LEVER FAUCET. FAUCET SHALL BE A SYMMONS "SUMMETRIX" MOD. #S-20-G-H OR EQUAL W/MAX. OUTLET TEMP. LIMIT STOP.	RESTROOMS	1/2"	1/2"	2"	1-1/2"	FAUCET SHALL HAVE A MAX. FLOW OF 1.2 GPM AND THE ABILITY TO LIMIT THE OUTLET WATER TEMPERATURE TO A MAX. TEMP. OF 110°F. SET ALL FAUCET AT MAX. 110°F TEMP WITH DEVICE PER ASSE 1070.
KS	KITCHEN SINK	AMERICAN STANDARD 24DB.332284.290 W/ DELTA 100LF-WF FAUCET	KITCHEN	3/4"	3/4"	2"	2"	FAUCET SHALL HAVE A MAX. FLOW OF 1.8 GPM AND THE ABILITY TO LIMIT THE OUTLET WATER TEMPERATURE TO A MAX. TEMP. OF 110°F. SET ALL FAUCET AT MAX. 110°F TEMP WITH DEVICE PER ASSE 1070.
SH	SHOWER	SHOWER FIXTURE: SYMMONS ORIGINS 9604-PLR	RESTROOMS	3/4"	3/4"	2"	2"	MIXING VALVE SHALL HAVE A MAX. FLOW OF 1.8 GPM AND THE ABILITY TO LIMIT THE OUTLET WATER TEMPERATURE TO A MAX. TEMP. OF 110°F. SET ALL FAUCET AT MAX. 110°F TEMP WITH DEVICE PER ASSE 1070.

Plumbing Equipment Specification

WATER HEATER TANKLESS — BRAND: NORITZ — MOD. #: — GAS INPUT: 100,000 BTUH

REMARK: WALL MOUNTED ON EXTERIOR WALL AS SHOWN ON PLAN. PROVIDE WITH TEMPERATURE REMOTE CONTROLLER. CONSULT OWNER'S REPRESENTATIVE FOR EXACT LOCATION OF REMOTE CONTROLLER(S). SET DIP SWITCH ON CONTROL BOARD TO A MAX. 120° F.

REVISIONS

AVP
2/12/20

JOB NAME
PROPOSED WORK FOR:
1357 ALTHEA DR.
OXNARD, CA. 93036

DRAWINGS VALID ONLY WITH ENGINEER'S WET SIGNATURE OVER SEAL ON EACH SHEET IN INK

ALL-TRADE
Engineering & Design
17 EAST HIGH STREET
MOORPARK, CA
T:805-552-4000
F:805-380-4551
JUDDSALLTRADE@YAHOO.COM
www.AllTradeEngineering.com

SHEET TITLE
PLUMBING NOTES & DETAILS

REGISTERED PROFESSIONAL ENGINEER SHANE DENNIS JUDD No. C70991 Exp. 06-30-21 CIVIL STATE OF CALIFORNIA

REGISTERED PROFESSIONAL ENGINEER SHANE DENNIS JUDD No. M34532 Exp. 12-31-21 MECHANICAL STATE OF CALIFORNIA

P-0.0

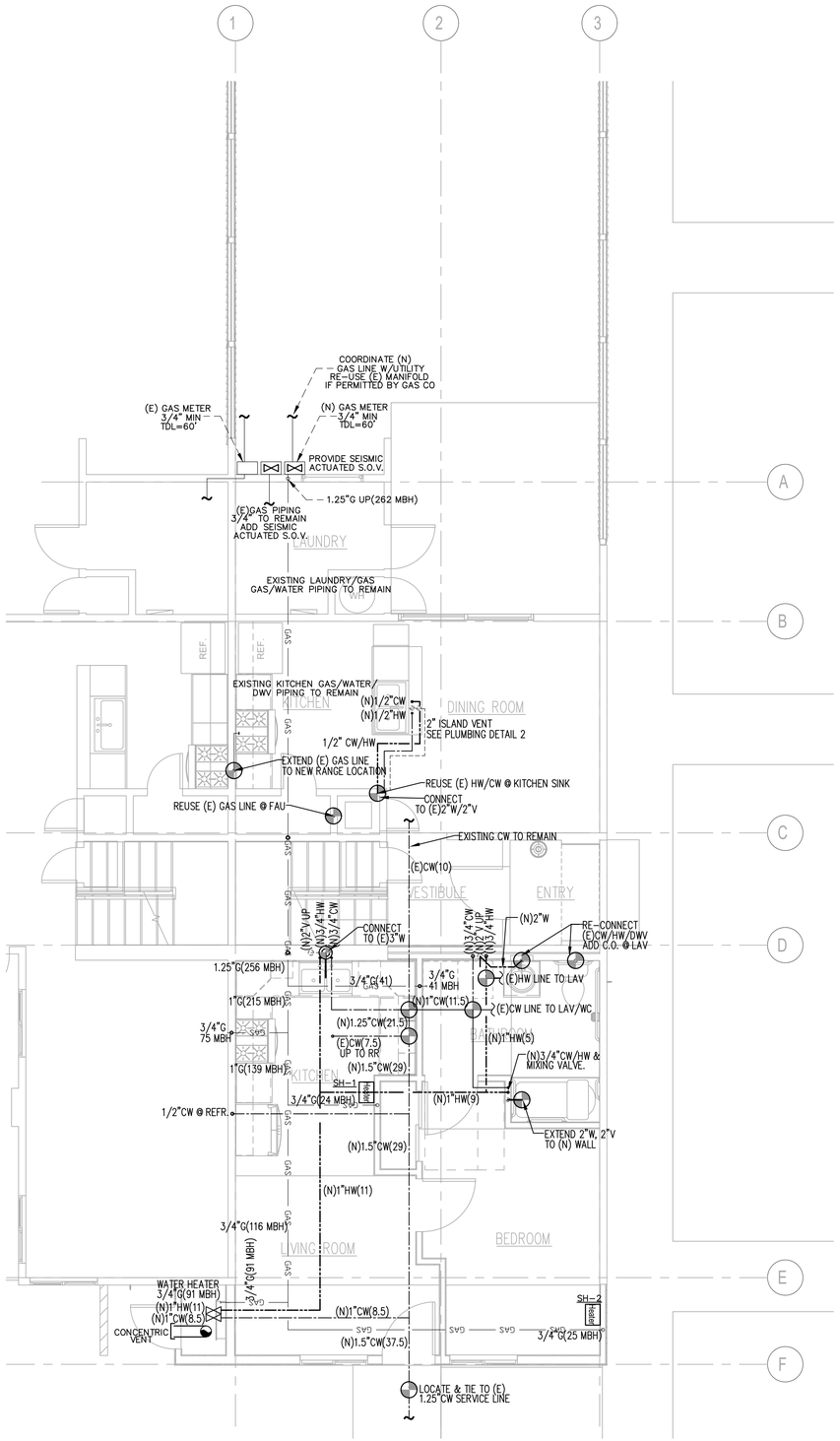

FIRST FLOOR PLUMBING PLAN

SCALE: 1/4":12"

*** NOTE ***
CONTRACTOR TO VERIFY EXACT SIZE, SLOPE AND LOCATION OF ALL EXISTING UTILITIES ON-SITE PRIOR TO CONSTRUCTION

PLUMBING LEGEND

#/#	VENT LINE & SIZE
#	WASTE LINE & SIZE (BUILDING SEWER SHALL BE LAID IN A FIRM BED OF SAND)
GW #/# GW	GREASE WASTE LINE & SIZE (BUILDING SEWER SHALL BE LAID IN A FIRM BED OF SAND)
#(#)	HOT WATER SUPPLY LINE SIZE(WSFU)
#(#)	COLD WATER SUPPLY LINE SIZE (WSFU)
FCW #(#) FCW	FILTERED COLD WATER SUPPLY LINE SIZE (WSFU)
G #(#) G	GAS PIPING SIZE (MBH)
	VENT LINE BELOW FLOOR
	HOT WATER SUPPLY LINE BELOW SLAB
	COLD WATER SUPPLY LINE BELOW SLAB
	CLEANOUT
	DWV, HW, CW RISER
	SHUT-OFF VALVE
	POINT OF CONNECTION (VIF)
(VIF)	VERIFY IN FIELD

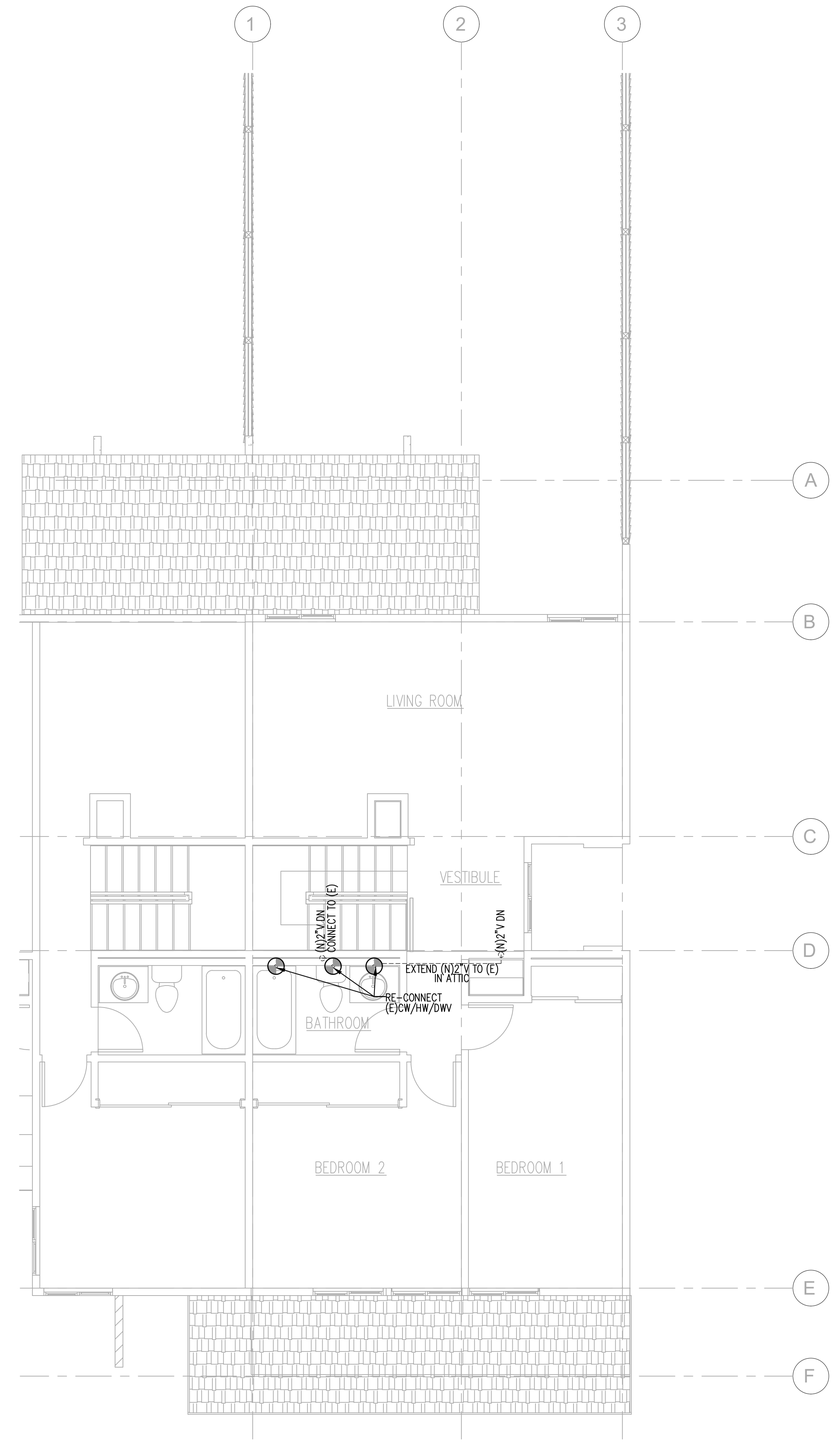

SECOND FLOOR PLUMBING PLAN

SCALE: 1/4":12"

These drawings are, as the property of ALL-TRADE ENGINEERING, all rights are reserved by ALL-TRADE ENGINEERING. All drawings and other information contained on these drawings are to be used for the specified project and shall not be used for any other project without written permission from ALL-TRADE ENGINEERING. The information contained on these drawings is to be considered confidential and shall remain the property of ALL-TRADE ENGINEERING. The reproduction, distribution or disclosure of the drawings and other information contained on these drawings, or any part thereof, without written permission of ALL-TRADE ENGINEERING is prohibited. Visual contact with these drawings shall constitute conclusive evidence of acceptance of these restrictions. ALL-TRADE ENGINEERING assumes no responsibility for any work performed based on field interpretations, the drawings and other information contained on these drawings may be subject to revision as a result of field conditions, requirements of the contract documents, or revisions required by the jurisdiction having authority.

REVISIONS

AVP 2/12/20

JOB NAME

PROPOSED WORK FOR:
1357 ALTHEA DR.
OXNARD, CA. 93036

DRAWINGS VALID ONLY WITH ENGINEER'S WET SIGNATURE OVER SEAL ON EACH SHEET IN INK

ALL-TRADE
Engineering & Design
17 EASTHAM STREET
WOODLAND, CA
T:(916)-565-4000
F:(916)-565-4851
JUDYCHALTRADE@YAHOO.COM
WWW.ALLTRADEENGINEERING.COM

SHEET TITLE

PLUMBING PLAN

REGISTERED PROFESSIONAL ENGINEER SHANE DENNIS SHANE DENNIS No. 73991 Exp. 06-30-21 CIVIL STATE OF CALIFORNIA

REGISTERED PROFESSIONAL ENGINEER SHANE DENNIS SHANE DENNIS No. M34642 Exp. 12-31-21 MECHANICAL STATE OF CALIFORNIA

P-1.0

LED FIXTURE SCHEDULE

TYPE	MANUFACTURER AND CATALOG NUMBER	LED MODULE TYPE	LED MODULE COLOR TEMP	LED MODULE WATTS	DRIVER	OPTIC/LENS	REMARKS
A / 20	JUNO JSF 13IN 18LM 30K 90CRI 120FRPC WH		3000K		FRPC	DIFFUSE	SLIM S/M 13"
B / 10	JUNO JSF 5IN 07LM 30K 90CRI 120FRPC WH		3000K		FRPC	DIFFUSE	SLIM S/M 5"
C / 24	TECH 700 BC BAS 24S - LED 927		2700K	24	ELECTRONIC	DIFFUSE	VANITY LIGHT

(N) PANEL SCHEDULE "A"

SERVICE: 120/240V 1Φ 3W | MAIN BKR.: MLO | BUS: 100A | LOC.: SEE PLAN

SQUARE D QO LOAD CENTER | MTG.: FLUSH

REMARKS	LOAD ΦA	LOAD ΦB	REC	LTG	MISC	POLE	TRIP	CIRC		CIRC	TRIP	POLE	REC	LTG	MISC	LOAD ΦA	LOAD ΦB	REMARKS
LAUNDRY CIRCUIT	1500		2			1	20	1	*	2	20	1						GEN LTG
SMOKE DETECTORS		100			3			3		4		1						
BATHROOM CIRCUIT	500		1	1	1			5		6		1						
REFRIGERATOR		800	1					7	*	8	15	1			1			FAU
BATHROOM CIRCUIT	500		1	1	1			9		10	15	1			1			FAU
SPARE								11		12	20	1						SPARE
SMALL APPLIANCE CKT	1500							13		14								
"		1500						15		16								
EXT REC	500		1					17		18								
WH IGNITION		100			1			19		20								
SPARE								21		22								
"								23		24								

TOTAL WATTS= | ΦA= | ΦB=

AMPS= SEE ELECTRICAL LOAD CALCULATIONS | MINIMUM BKR | A.I.C. RATING= 10,000 AMPS SYM

* AFCI / GFCI COMBINATION CIRCUIT BREAKER

ALL CIRCUIT BREAKERS SHALL BE AFCI.

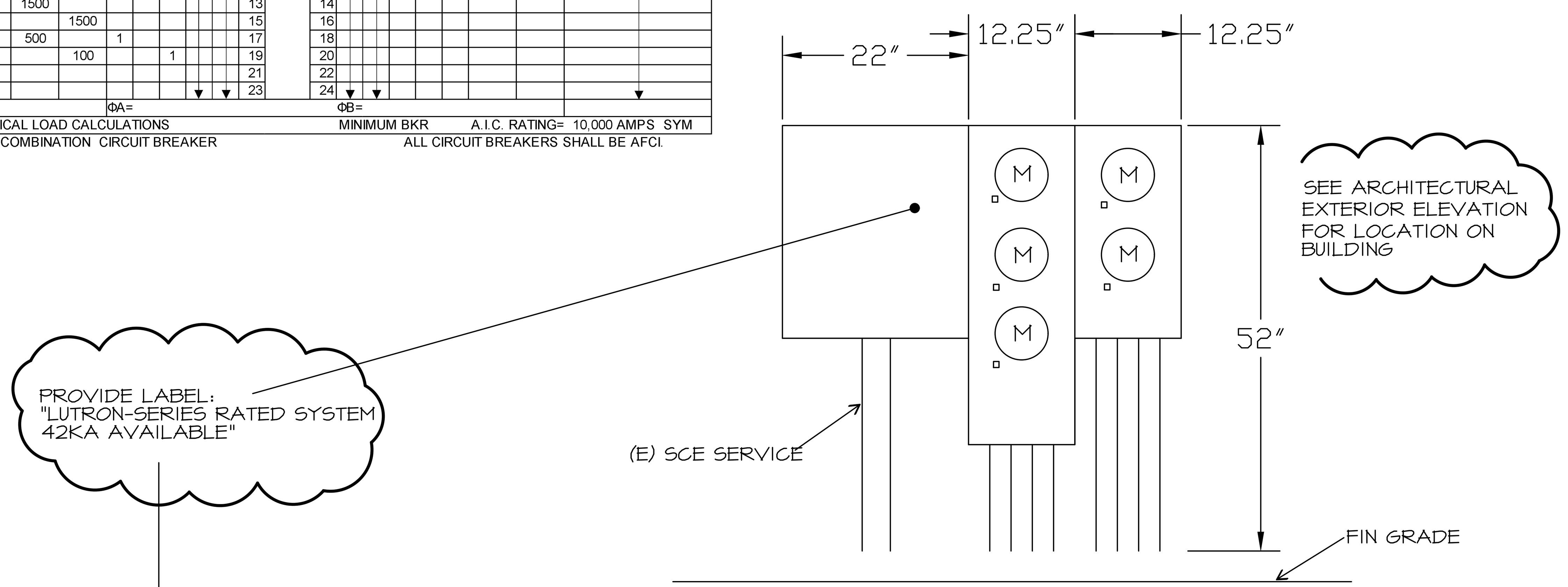

METERING ELEVATION (B)

SCALE: NONE

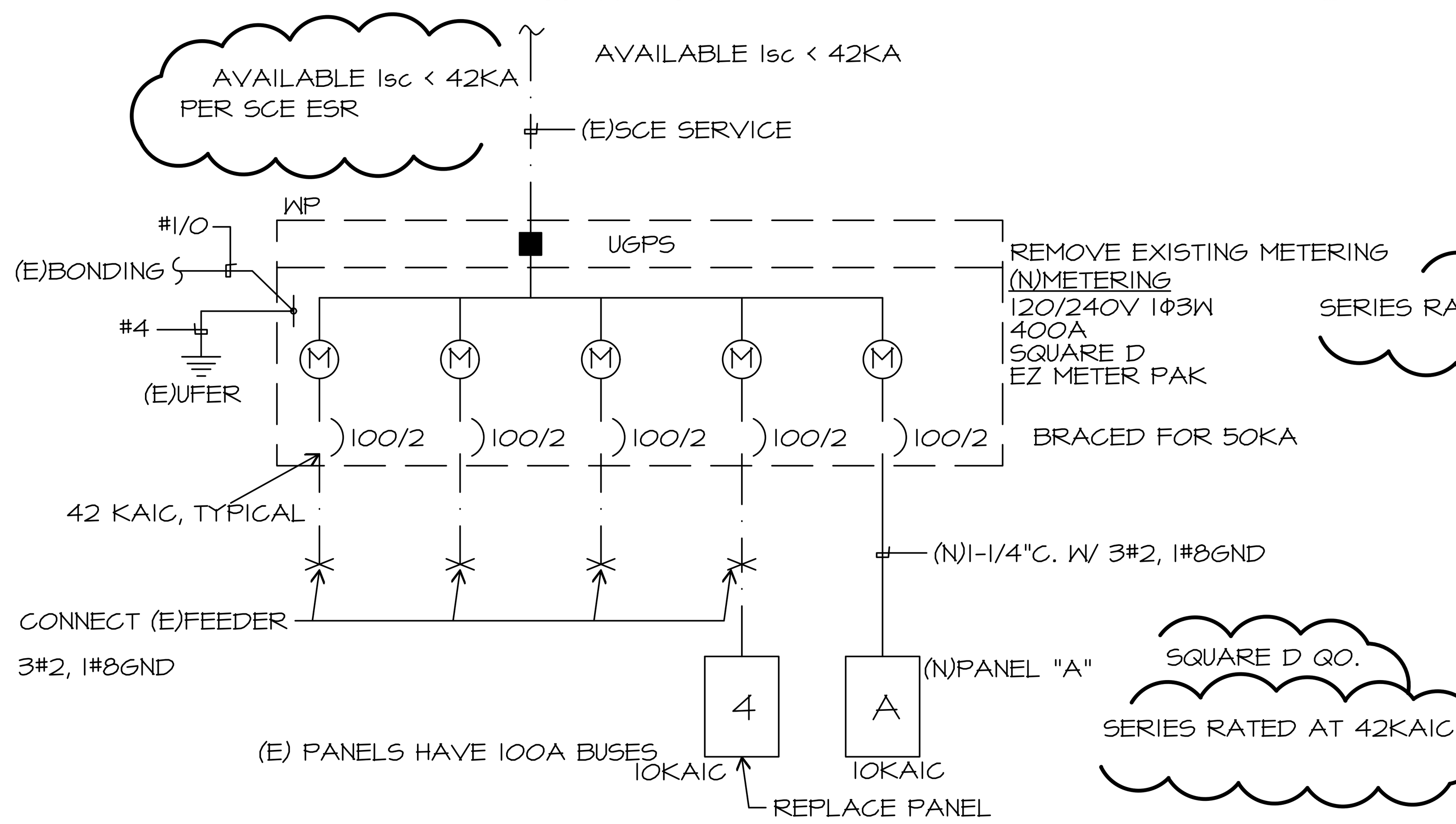

SINGLE LINE DIAGRAM (A)

SCALE: NONE

GENERAL NOTES

1. VISIT JOB SITE AND VERIFY EXISTING CONDITIONS PRIOR TO BID.
2. THE ELECTRICAL WORK SHALL BE INSTALLED IN ACCORDANCE WITH THE CALIFORNIA ELECTRICAL CODE AND ALL APPLICABLE LOCAL ORDINANCES. WHERE PLANS CALL FOR A HIGHER STANDARD THAN APPLICABLE CODES, THE PLANS SHALL GOVERN.
3. CONDUIT RUNS ARE SHOWN DIAGRAMMATICALLY. EXACT LOCATIONS SHALL BE DETERMINED IN THE FIELD TO SUIT FIELD CONDITIONS.
4. ALL ELECTRICAL EQUIPMENT, APPLIANCES AND LIGHTING FIXTURES SHALL BE LISTED BY A RECOGNIZED TEST LAB AND BEAR THAT LABEL OF APPROVAL.
5. CONTRACTOR SHALL FURNISH, INSTALL AND CONNECT ALL MATERIAL AND EQUIPMENT FOR THIS WORK UNLESS OTHERWISE NOTED.
6. FURNISH DISCONNECT SWITCHES AT REMOTE MOTORS.
7. ALL SPACES AS INDICATED ON PANELS OR SWITCHBOARDS SHALL BE COMPLETE WITH HARDWARE AND BUSSING FOR FUTURE BREAKER OR SWITCH.
8. CHECK ARCHITECTURAL PLANS FOR DOOR SWINGS BEFORE INSTALLING SWITCH OUTLETS.
9. GROUNDING AND BONDING SHALL BE PER CODE PLUS ANY ADDITIONAL PROVISIONS SPECIFIED OR SHOWN ON DRAWINGS.
10. ALL CONDUIT RUNS SHALL CONTAIN A CODE SIZED GREEN GROUND WIRE.
11. THESE PLANS ARE NOT COMPLETE UNTIL APPROVED BY THE AUTHORITY HAVING JURISDICTION.
12. ALL FEEDER CONDUCTORS SHALL BE IN CONDUIT. BRANCH CIRCUITS MAY BE NON-METALLIC SHEATHED CABLE.
13. ALL CONDUCTORS SHALL BE COPPER WITH TYPE THHN/THWN INSULATION.
14. COORDINATE WITH SERVING ELECTRICAL UTILITY COMPANY AND MAKE PROVISIONS FOR ELECTRICAL SERVICE ACCORDINGLY. INCLUDE ALL SERVICE COSTS AND UTILITY COMPANY CHARGES IN BID.
15. COORDINATE WITH SERVING TELEPHONE UTILITY COMPANY AND MAKE PROVISIONS FOR TELEPHONE SERVICE ACCORDINGLY. INCLUDE ALL SERVICE COSTS AND ANY UTILITY COMPANY CHARGES IN BID.
16. COORDINATE WITH SERVING CABLE TELEVISION COMPANY AND MAKE PROVISIONS FOR CABLE TELEVISION ACCORDINGLY. INCLUDE ALL SERVICE COSTS AND ANY UTILITY COMPANY CHARGES IN BID.
17. ALL PERMITS SHALL BE OBTAINED AND PAID FOR BY CONTRACTOR.
18. ALL RECEPTACLES IN DWELLING UNITS SHALL BE PROTECTED BY A LISTED ARC FAULT CIRCUIT INTERRUPTER, COMBINATION TYPE PER CEC 210.12
19. TAMPER RESISTANCE RECEPTACLE SHALL BE INSTALLED IN DWELLING UNITS PER CEC 406.11
20. SMOKE DETECTORS SHALL BE 120V, PHOTOELECTRIC/ION COMBINATION UNITS WITH BATTERY BACK UP
21. HALLWAY DETECTOR SHALL BE COMBINATION SMOKE AND CARBON MONOXIDE DETECTOR
22. VERIFY LOCATION OF FLUSH FLOOR RECEPTACLE PRIOR TO ROUGH IN
23. WP EXTERIOR RECEPTACLES SHALL HAVE HUBBEL #ML500 COVERS OR EQUAL
24. MANUFACTURER'S LITERATURE SHOWING PROPOSED LED AND/OR LOW VOLTAGE LIGHT FIXTURES ARE HIGH EFFICACY AND CALIFORNIA CERTIFIED IS TO BE ON SITE AT THE TIME OF FIELD INSPECTION.
25. WHERE BRANCH CIRCUIT WIRING IS MODIFIED, REPLACED OR EXTENDED, THE BRANCH CIRCUIT SHALL BE PROTECTED BY EITHER A LISTED COMBINATION TYPE AFCI LOCATED AT THE ORIGIN OF THE BRANCH CIRCUIT OR A LISTED OUTLET BRANCH-CIRCUIT TYPE AFCI LOCATED AT THE FIRST RECEPTACLE OF THE EXISTING BRANCH CIRCUIT.
26. ELECTRICAL EQUIPMENT FOR INDOOR ELECTRIC VEHICLE CHARGING STATIONS SHALL BE INSTALLED IN ACCORDANCE WITH CRC R328 AND THE CALIFORNIA ELECTRICAL CODE. THE ELECTRICAL SUPPLY CIRCUIT TO REQUIRED MECHANICAL EXHAUST VENTILATION EQUIPMENT SHALL BE INTERLOCKED WITH THE RECHARGING EQUIPMENT USED TO SUPPLY THE VEHICLE BEING CHARGED, AND SHALL REMAIN ENERGIZED DURING THE ENTIRE CHARGING CYCLE.
27. EXCEPT FOR DETACHED STORAGE BUILDINGS 1000 SQ. FEET OR LESS IN SIZE, PERMANENTLY INSTALLED LUMINARIES IN ROOMS OTHER THAN KITCHENS, BATHROOMS, GARAGES, LAUNDRY ROOMS, AND UTILITY ROOMS ARE TO BE HIGH EFFICACY, OR CONTROLLED BY A DIMMER SWITCH, OR CONTROLLED BY AN OCCUPANCY SENSOR THAT DOES NOT TURN ON AUTOMATICALLY OR HAVE AN ALWAYS-ON OPTION.
28. TWO MINIMUM 1" DIAMETER METALLIC CONDUITS SHALL BE PROVIDED THAT ORIGINATE AT A READILY ACCESSIBLE ATTIC LOCATION WITH PROXIMITY TO A SOLAR ZONE AREA COMPLYING WITH CALIFORNIA ENERGY CODE SECTION 110.10 AND TERMINATE AT A MINIMUM 4" ELECTRICAL PANEL. THE ELECTRICAL JUNCTION BOX AND SEGMENT OF CONDUIT RUN IN THE ATTIC SHALL BE PERMANENTLY AND VISIBLY MARKED AS "FOR FUTURE SOLAR PHOTOVOLTAIC".
29. ALL KITCHEN CIRCUITS SHALL HAVE GFCI PROTECTION.
30. ALL SWITCHES AND RECEPTACLES WHERE REQUIRED TO BE ACCESSABLE APPLICABLE REACH RANGE REQUIREMENTS PER CBC CHAPTER 11-B. PROVIDE DETAILS FOR UNOBSTRUCTED AND OBSTRUCTED REACH RANGES ON THE PLNS. NOTE THAT HIGH REACH RANGES SHALL BE TAKEN FROM THE TOP OF THE BOX TO FINISH FLOOR AND LOW REACH RANGES SHALL BE TAKEN FROM THE TOP OF THE BOX TO FINISH FLOOR AND LOW REACH RANGES SHALL BE TAKEN FROM THE BOTTOM OF THE BOX TO FINISH FLOOR. THESE REACH RANGES ARE REFERENCED IN ANNEX J OF THE 2019 CA ELECTRICAL CODE / ANNEX 2017 ANNEX J.

SYMBOLS

- CONDUIT EXISTING
- CONDUIT CONCEALED IN WALL OR CEILING
- CONDUIT CONCEALED UNDER FLOOR OR BELOW GRADE
- CONDUIT STUBBED OUT AND CAPPED
- CONDUIT TURNED UP
- CONDUIT TURNED DOWN
- HATCH MARKS INDICATE NO. OF #12 WIRES IN CODE SIZED CONDUIT (3) MAX. IN 1/2" C., (5) MAX. IN 3/4" C., (8) MAX. IN 1"C., NO MARKS = 2#12
- A-3: HOME RUN: LETTER INDICATES PANEL, NUMBER(S) INDICATES CIRCUIT(S).
- SAWCUT
- GROUND CONNECTION
- DISTRIBUTION SWITCHBOARD OR PANEL
- PANEL, BRANCH CIRCUIT TYPE, SURFACE AND FLUSH
- SIGNAL TERMINAL CABINET, SURFACE & FLUSH
- FLUORESCENT FIXTURE
- OUTLET DATA: BAR INDICATES WALL MOUNT, LETTER INDICATES SWITCH CONTROL, NO. INDICATES CIRCUIT.
- SURFACE FIXTURE ON FLUSH OUTLET.
- RECESSED FIXTURE WITH JUNCTION BOX FOR THRU WIRING
- EXIT LIGHT WITH ARROWS AS SHOWN ON PLANS, WALL AND CEILING MOUNT.
- LOW LEVEL EXIT SIGN, +6" AFF, +4" FROM DOOR JAMB
- A / 100: LIGHT FIXTURE DESIGNATION, LETTER INDICATES TYPE, NO. INDICATES WATTAGE. SEE FIXTURE SCHEDULE.
- FC / 1: MECHANICAL EQUIPMENT DESIGNATION. SEE MECHANICAL DRAWINGS.
- SPECIAL RECEPTACLE - SEE PLAN
- METER
- FLUSH FLOOR RECEPTACLE
- RECEPTACLE, DUPLEX, 15A, 125V, NEMA 5-15R +18" U.N.O.
- DUPLEX RECEPTACLE MTD. ABOVE BACKSPLASH
- DUPLEX RECEPTACLE W/LOWER HALF SWITCHED
- GFI: GROUND FAULT CIRCUIT INTERRUPTING RECEPTACLE
- DOUBLE DUPLEX RECEPTACLE
- CEILING RECEPTACLE
- RECEPTACLE, DUPLEX, 20A, 125V, NEMA 5-20R +18" U.N.O.
- JUNCTION BOX 4" SQUARE, 1-1/2" DEEP U.N.O.
- THERMOSTAT F.B.O. +48"
- MOTOR, NO. INDICATES HORSEPOWER
- CLOCK OUTLET +7'-6" U.N.O.
- DISCONNECT SWITCH, NON-FUSED
- DISCONNECT SWITCH FUSED HORSEPOWER RATED OR SIZED AS NOTED
- COMBINATION MAGNETIC STARTER WITH DISCONNECT SWITCH AND FUSES
- MAGNETIC MOTOR STARTER W/OVERLOADS IN EACH PHASE
- DIMMER W/INTEGRAL "ON-OFF" SW.
- PUSHBUTTON
- PHOTOCELL
- SMOKE DETECTOR
- TELEPHONE/COMPUTER/DATA OUTLET, TWO GANG BOX W/1 GANG COVERPLATE & GROMMETED OPENING +18" U.N.O.
- CABLE TV OUTLET +18" U.N.O.
- MOTION SENSOR
- $: EXISTING SWITCH
- S: SINGLE POLE SWITCH
- S^2: DOUBLE POLE SWITCH
- S^3: THREE WAY SWITCH
- S^P: SWITCH W/PILOT LT.
- (S through S^P:) QUIET TOGGLE TYPE RATED AT 20A 120/277V AC. +42" U.N.O.
- S^M: MANUAL MOTOR STARTER
- FACP: FIRE ALARM CONTROL PANEL
- GFI: GROUND FAULT CIRCUIT INTERRUPTING
- LST: LABOR SAVING TANDEM
- MLO: MAIN LUGS ONLY
- W/: WITH
- C.O.: CONDUIT ONLY
- W.P.: WEATHERPROOF
- F.B.O.: FURNISHED BY OTHERS, INSTALL & CONNECT
- U.N.O.: UNLESS NOTED OTHERWISE
- N.E.C.: NATIONAL ELECTRICAL CODE
- N.I.C.: NOT IN CONTRACT
- (E): EXISTING
- (N): NEW
- (R): REMOVE
- (RL): RELOCATE
- S/M: SURFACE MOUNT
- U/G: UNDERGROUND
- CWP: COLD WATER PIPE
- AFF: ABOVE FINISHED FLOOR
- HACR: HEATING AND AIR CONDITIONING RATED CIRCUIT BREAKER
- N.L.: NIGHT LIGHT

NOTE: NOT ALL SYMBOLS SHOWN ARE USED ON THIS PROJECT.

THESE DRAWINGS AND SPECIFICATIONS ARE THE PROPERTY AND COPYRIGHT OF LAUTERBACH & ASSOCIATES, ALL RIGHTS RESERVED, AND SHALL NOT BE USED ON ANY OTHER WORK OR PROJECT EXCEPT BY WRITTEN AGREEMENT WITH LAUTERBACH & ASSOCIATES. WRITTEN DIMENSIONS SHALL TAKE PRECEDENCE OVER SCALED DIMENSIONS AND SHALL BE VERIFIED ON THE JOB SITE. ANY DISCREPANCY SHALL BE BROUGHT TO THE NOTICE OF LAUTERBACH & ASSOCIATES PRIOR TO COMMENCEMENT OF ANY WORK.

Project Architect
LAUTERBACH & ASSOCIATES
A R C H I T E C T S • I N C.
David C. Kesterson, Architect • Ilona Scott, Architect • Mark S. Pettit, Architect
300 MONTGOMERY AVENUE, OXNARD, CALIFORNIA 93036 | 805-988-0912 | FAX 805-981-4510 | www.la-arch.com

JMPE
ELECTRICAL ENGINEERING
LIGHTING DESIGN
CA REGISTRATION NO E13083
20033
627 OLIVE STREET
SANTA BARBARA CA 93101
(805) 569-9216
FAX (805) 569-2405
email : maloney@jmpe.net
www.jmpe.net

REGISTERED PROFESSIONAL ENGINEER JOHN MALONEY No. E01[illegible] EXP. [illegible] ELECTRICAL STATE OF CALIFORNIA

CONCORD DRIVE APARTMENTS

2950 & 2956 CONCORD DRIVE
OXNARD, CA, 93036

CITY OF OXNARD HOUSING AUTHORITY

435 S. D STREET
OXNARD, CALIFORNIA 93030

	REVISIONS	12-01-2020
1	SUBMITTAL	02-26-2020
NO	DESCRIPTION	DATE

ISSUE

JOB NO. 20-190708

DRAWN BY: -
CHECKED BY: -
PROJECT MANAGER: -
PRINT DATE:

GENERAL NOTES, SYMBOLS & DETAILS

EC-001

File Path

STATE OF CALIFORNIA
CEC-CF2R-LTG-01-E (Revised 01/20) CALIFORNIA ENERGY COMMISSION

Lighting – Single Family Dwellings

CERTIFICATE OF INSTALLATION	CF2R-LTG-01-E
Lighting – Single Family Dwellings	(Page 1 of 3)

Project Name: **CONCORD DRIVE APARTMENTS**	Enforcement Agency:	Permit Number:
Dwelling Address:	City:	Zip Code:

A. Installed Lighting and Controls Select Yes or No according to whether your work on the project includes each of the following types of lighting and controls. See Sections B through H for applicable requirements.		Y or N
01	High Efficacy luminaires installed in any interior rooms. (See Section B.)	
02	JA8 compliant luminaires and controls installed in any interior rooms. (See Section B.)	
03	Recessed downlight luminaire in ceilings in any interior rooms. (See Section C.)	
04	Screw-based luminaires installed in any interior rooms. (See Section D.)	
05	Enclosed or recessed luminaires installed in any interior rooms. (See Section D.)	
06	Lighting and controls in bathrooms. (See Section E.)	
07	Lighting and controls in laundry rooms. (See Section E.)	
08	Lighting and controls in utility rooms. (See Section E.)	
09	Lighting and controls in garage. (See Section E.)	
10	Outdoor lighting and controls. (See Section H.)	
11	Blank electrical boxes installed more than 5 feet from finished floor. (See Section F.)	
12	Internally illuminated address signs. (See Section G.)	

B. High Efficacy Luminaires and Controls	
01	150.0(k)1A and Table 150.0-A: All luminaires are installed with: • Light sources of one of the lighting technologies specified under the "High Efficacy" column of Table 150.0-A; or • JA8 compliant light sources and the light sources are marked with a label reading "JA8-2019" or "JA8-2019-E".
02	150.0(k)2I: Dimming controls for all luminaires with dimmable JA8 compliant light sources except for those controlled by occupancy or vacancy sensors.
03	150.0(k)2A: Forward phase cut dimmers used with LED light sources shall comply with NEMA SSL 7A.
The responsible person's signature on this compliance document affirms that all applicable requirements in this table have been met.	

C. Recessed Downlight Luminaires in Ceilings	
01	150.0(k)1Cv: Do not contain screw based sockets.
02	The luminaire shall be marked with "JA8-2019".
03	150.0(k)1Ci: Listed for zero clearance insulation contact (IC).
04	150.0(k)1Cii: Has label certifying air tight.
05	150.0(k)1Ciii: Sealed with a gasket or caulk between the luminaire housing and ceiling, and all air leakage paths between conditioned and unconditioned spaces are sealed with a gasket or caulk.
06	150.0(k)1Civ: Allows ballast maintenance and replacement to be readily accessible to building occupants from below the ceiling without requiring the cutting of holes in the ceiling.
The responsible person's signature on this compliance document affirms that all applicable requirements in this table have been met.	

D. Additional Luminaire Requirements	
01	150.0(k)1G: **Screw based luminaires** are installed with all of the following requirements: • The luminaire is not recessed downlight luminaire in ceilings; and • The luminaires are installed with lamps or light sources marked with "JA8-2019".
02	150.0(k)1H: **Enclosed or Recessed luminaires** are installed with lamps or other separable light sources marked with "JA8-2019-E".
03	150.0(k)1D: Ballasts for fluorescent lamps rated 13 Watts or greater are electronic.
04	150.0(k)1E: Night lights, step lights and path lights are rated to consume no more than 5 Watts of power and emit more than 150 lumens, or in compliance with Table 150.0-A, or controlled by vacancy sensors.
05	150.0(k)1F: **Lighting integral to exhaust fans** meets the requirements of Table 150.0-A, with exception to the lighting installed by the *manufacturer* in kitchen exhaust hoods.
The responsible person's signature on this compliance document affirms that all applicable requirements in this table have been met.	

Registration Number: Registration Date/Time: HERS Provider:
CA Building Energy Efficiency Standards - 2019 Residential Compliance January 2020

STATE OF CALIFORNIA
CEC-CF2R-LTG-01-E (Revised 01/20) CALIFORNIA ENERGY COMMISSION

Lighting – Single Family Dwellings

CERTIFICATE OF INSTALLATION	CF2R-LTG-01-E
Lighting – Single Family Dwellings	(Page 2 of 3)

Project Name: **CONCORD DRIVE APARTMENTS**	Enforcement Agency:	Permit Number:
Dwelling Address:	City:	Zip Code:

E. Additional Lighting Controls	
01	150.0(j2): In **bathrooms, garages, laundry rooms, and utility rooms**, at least one luminaire in each of these spaces is controlled by an occupant or vacancy sensor providing automatic-off functionality.
02	150.0(j2B: **Exhaust fans** are controlled separately from lighting systems, or the lighting can be turned OFF on the same control as the fan.
03	150.0(j2C: Lighting has readily accessible wall-mounted controls that allow the lighting to be manually turned ON and OFF.
04	150.0(j2D: Lighting controls and equipment are installed in accordance with manufacturer's instructions.
05	150.0(j2E: No controls bypasses a dimmer, occupancy sensor or vacancy sensor function where that dimmer or sensor has been installed to comply with Section 150.0(k)
06	150.0(j2F: Lighting controls comply with the applicable requirements in Section 110.9.
07	150.0(j2G: **Energy Management Control Systems** used to comply with control requirements provide the functionality of the specified control in accordance with Section 110.9, meet the installation certificate requirements in Section 130.4, meets the EMCS requirements in Section 130.0(e), and complies with all other applicable requirements in Section 150.0(k)2.
08	150.0(j2H: A **multi-scene programmable controller** used to comply with dimmer requirements provides the functionality of a dimmer in accordance with Section 110.9, and complies with all other applicable requirements in Section 150.0(k)2.
09	150.0(j2I: **Undercabinet lighting** is controlled separately from ceiling installed lighting.
The responsible person's signature on this compliance document affirms that all applicable requirements in this table have been met.	

F. Blank Electrical Boxes	
01	150.0(k)1B: The number of blank electrical boxes installed more than five feet above the finished floor and do not contain a luminaire or other device, are not greater than the number of bedrooms. The blank boxes are served by dimmer, vacancy sensor, or fan speed control.
The responsible person's signature on this compliance document affirms that all applicable requirements in this table have been met.	

G. Address Signs	
01	150.0(k)1K: Internally illuminated address signs. Internally illuminated address signs shall either: • Comply with Section 140.8. Applicable nonresidential sign lighting compliance forms shall also be submitted; or • Consume no more than 5 Watts of power.
The responsible person's signature on this compliance document affirms that all applicable requirements in this table have been met.	

H. Single Family Outdoor Lighting	
01	150.0(k)1A and Table 150.0-A: High efficacy outdoor lighting or LED light sources are installed.
02	150.0(k)3A: Outdoor lighting is controlled by a manual ON and OFF switch that permits one of the following automatic actions: • Controlled by a photocell and either a motion sensor or an automatic time switch control; or • Controlled by an astronomical time clock control. Controls that override to ON shall not be allowed unless the override automatically returns the automatic control to its normal operation within 6 hours. An energy management control that provides the specified lighting control functionality and complies with all requirements applicable to the specified controls may be used to meet the above requirements.
The responsible person's signature on this compliance document affirms that all applicable requirements in this table have been met.	

Registration Number: Registration Date/Time: HERS Provider:
CA Building Energy Efficiency Standards - 2019 Residential Compliance January 2020

STATE OF CALIFORNIA
CEC-CF2R-LTG-01-E (Revised 01/20) CALIFORNIA ENERGY COMMISSION

Lighting – Single Family Dwellings

CERTIFICATE OF INSTALLATION	CF2R-LTG-01-E
Lighting – Single Family Dwellings	(Page 3 of 3)

Project Name: **CONCORD DRIVE APARTMENTS**	Enforcement Agency:	Permit Number:
Dwelling Address:	City:	Zip Code:

DOCUMENTATION AUTHOR'S DECLARATION STATEMENT

1. I certify that this Certificate of Installation documentation is accurate and complete.

Documentation Author Name:	Documentation Author Signature:
Documentation Author Company Name:	Date Signed:
Address:	CEA/HERS Certification Identification (if applicable):
City/State/Zip:	Phone:

RESPONSIBLE PERSON'S DECLARATION STATEMENT

I certify the following under penalty of perjury, under the laws of the State of California:

1. The information provided on this Certificate of Installation is true and correct.
2. I am either: a) a responsible person eligible under Division 3 of the Business and Professions Code in the applicable classification to accept responsibility for the system design, construction, or installation of features, materials, components, or manufactured devices for the scope of work identified on this Certificate of Installation, and attest to the declarations in this statement, or b) I am an authorized representative of the responsible person and attest to the declarations in this statement on the responsible person's behalf.
3. The constructed or installed features, materials, components or manufactured devices (the installation) identified on this Certificate of Installation conforms to all applicable codes and regulations and the installation conforms to the requirements given on the Certificate of Compliance, plans, and specifications approved by the enforcement agency.
4. I will ensure that a registered copy of this Certificate of Installation shall be posted or made available with the building permit(s) issued for the building, and made available to the enforcement agency for all applicable inspections. I understand that a registered copy ofthis Certificate of Installation is required to be included with the documentation the builder provides to the building owner at occupancy.

Responsible Builder/Installer Name:	Responsible Builder/Installer Signature:	
Company Name: (Installing Subcontractor or General Contractor or Builder/Owner)	Position With Company (Title):	
Address:	CSLB License:	
City/State/Zip:	Phone:	Date Signed:

Registration Number: Registration Date/Time: HERS Provider:
CA Building Energy Efficiency Standards - 2019 Residential Compliance January 2020

CERTIFICATE OF INSTALLATION – USER INSTRUCTIONS	CF2R-LTG-01-E
Lighting – Single Family – LTG-01	(Page 1 of 1)

CF2R-LTG-01-E User Instructions

There are two version of the residential lighting Certificate of Installation. This version, the CF2R-LTG-01-E, is primarily used for demonstrating compliance with the residential lighting Standards for single-family dwellings.

The LTG-01 shall also be used to demonstrate compliance with the residential lighting requirements for high-rise residential dwelling units; outdoor lighting that is attached to a high-rise residential or hotel/motel building, and is separately controlled from the inside of a dwelling unit or guest room; fire station dwelling accommodations; hotel and motel guest rooms; and, dormitory and senior housing dwelling accommodations. When using the CF2R-LTG-01-E to demonstrate compliance with the lighting in the dwelling units, compliance with lighting that is not in the dwelling units, such as lighting in common areas, shall be demonstrated using the nonresidential lighting compliance documentation.

The other version of the residential lighting Certificate of Compliance, the CF2R-LTG-02-E, is used for demonstrating compliance with the residential lighting Standards for low-rise multi-family dwellings. The primary difference between the LTG-02 and LTG-01 is that the LTG-02 includes additional requirements for demonstrating compliance with residential outdoor lighting, and common areas associated with low-rise multi-family dwelling units.

Section A. Installed Lighting and Controls
This table is used to identify the scope of the work being covered by the responsible person signing this document. One person may be responsible for all of the measures in this table, or several people may each be responsible for only a portion of the measures. If several people are responsible, each person must separately fill out this Certificate of Installation for those measures for which they are responsible. In some situations, such as for alterations and additions, only some of the measures may be included in the total scope of work.

For rows 1 through 12 – insert 'Y' for each measure that is included in the scope of work, and insert 'N' for each measure that is not included in the scope of work.

Section B. High Efficacy Luminaires and Controls
This table is a list of mandatory requirements for high efficacy luminaires.

Section C. Recessed Downlight Luminaires in Ceilings
This table is a list of mandatory requirements for recessed downlight luminaires in ceilings.

Section D. Additional Luminaire Requirements
This table is a list of additional requirements for luminaires.

Section E. LED Luminaires
This table is a list of mandatory requirements for LED luminaires.

Section F. Blank Electrical Boxes
This table is a list of mandatory requirements for blank electrical boxes.

Section G. Address Signs
This table is a list of mandatory requirements for address signs.

Section H. Single Family Outdoor Lighting
This table is a list of mandatory requirements for single family outdoor lighting.

CA Building Energy Efficiency Standards - 2019 Residential Compliance January 2020

THESE DRAWINGS AND SPECIFICATIONS ARE THE PROPERTY AND COPYRIGHT OF LAUTERBACH & ASSOCIATES. ALL RIGHTS RESERVED, AND SHALL NOT BE USED ON ANY OTHER WORK OR PROJECT EXCEPT BY WRITTEN AGREEMENT WITH LAUTERBACH & ASSOCIATES. WRITTEN DIMENSIONS SHALL TAKE PRECEDENCE OVER SCALED DIMENSIONS AND SHALL BE VERIFIED ON THE JOB SITE. ANY DISCREPANCY SHALL BE BROUGHT TO THE NOTICE OF LAUTERBACH & ASSOCIATES PRIOR TO COMMENCEMENT OF ANY WORK.

Project Architect
LAUTERBACH & ASSOCIATES
ARCHITECTS INC.
David C. Kesterson, Architect • Ilona Scott, Architect • Mark S. Pettit, Architect
300 MONTGOMERY AVENUE, OXNARD, CALIFORNIA 93036 | 805-988-0912 | FAX 805-981-4510 | www.la-arch.com

JMPE
ELECTRICAL ENGINEERING
LIGHTING DESIGN
CA REGISTRATION NO E13083
20033
627 OLIVE STREET
SANTA BARBARA CA 93101
(805) 569-8216
FAX (805) 569-2405
email : maloney@jmpe.net
www.jmpe.net
REGISTERED PROFESSIONAL ENGINEER
JAMES MALONEY
E013083
EXP. 06/30/2021
ELECTRICAL
STATE OF CALIFORNIA

CONCORD DRIVE APARTMENTS
2950 & 2956 CONCORD DRIVE
OXNARD, CA, 93036

CITY OF OXNARD HOUSING AUTHORITY
435 S. D STREET
OXNARD, CALIFORNIA 93030

NO	DESCRIPTION	DATE
1	SUBMITTAL	02-26-2020

ISSUE

JOB NO. 20-190708

DRAWN BY: -
CHECKED BY: -
PROJECT MANAGER: -
PRINT DATE:

RESIDENTIAL LIGHTING COMPLIANCE FORMS

EC-002

File Path

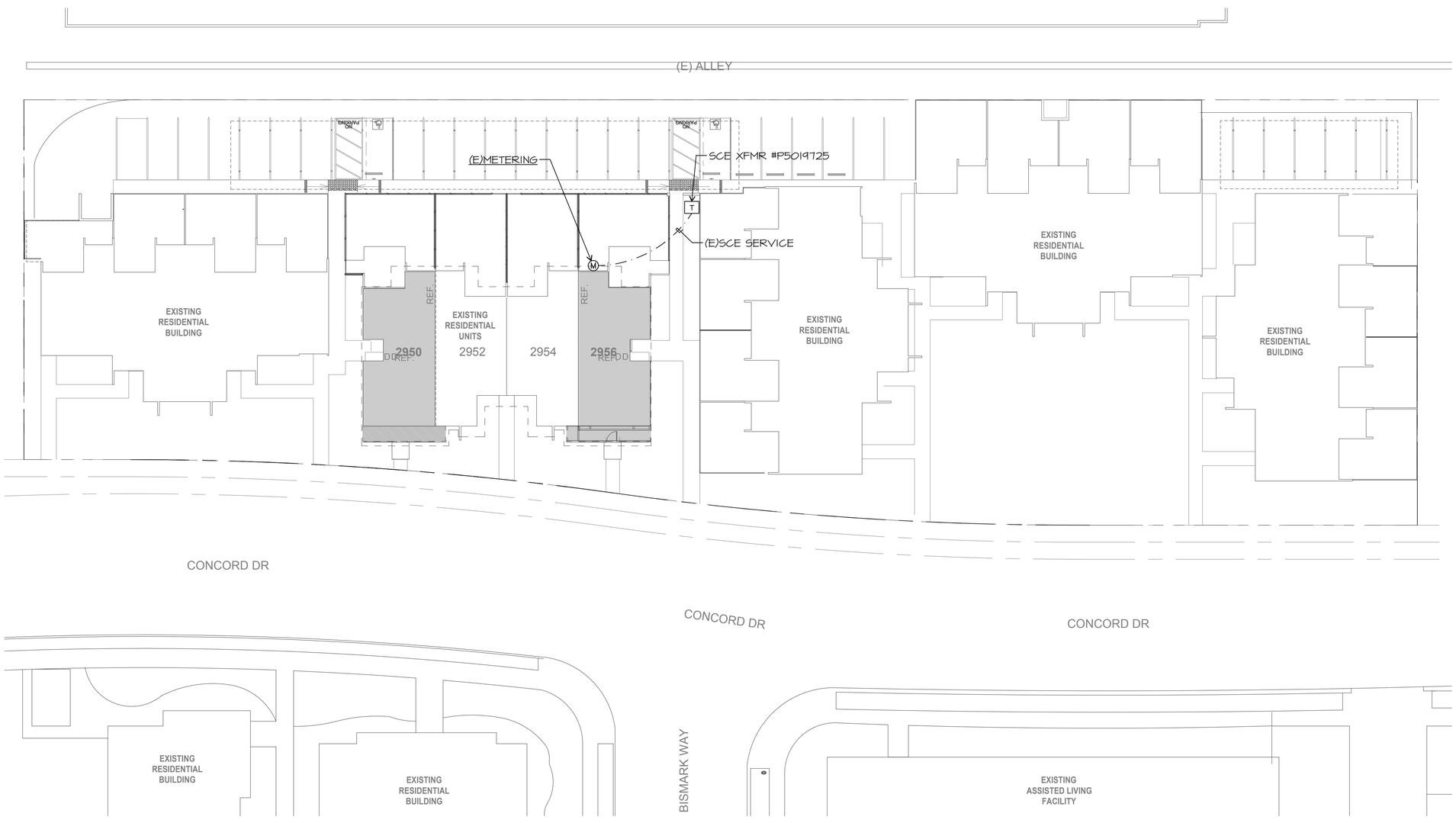

ELECTRICAL SITE PLAN

SCALE: 1/16" = 1'-0"

THESE DRAWINGS AND SPECIFICATIONS ARE THE PROPERTY AND COPYRIGHT OF LAUTERBACH & ASSOCIATES. ALL RIGHTS RESERVED, AND SHALL NOT BE USED ON ANY OTHER WORK OR PROJECT EXCEPT BY WRITTEN AGREEMENT WITH LAUTERBACH & ASSOCIATES. WRITTEN DIMENSIONS SHALL TAKE PRECEDENCE OVER SCALED DIMENSIONS AND SHALL BE VERIFIED ON THE JOB SITE. ANY DISCREPANCY SHALL BE BROUGHT TO THE NOTICE OF LAUTERBACH & ASSOCIATES PRIOR TO COMMENCEMENT OF ANY WORK.

Project Architect

LAUTERBACH & ASSOCIATES
ARCHITECTS INC.
David C. Kesterson, Architect • Ilona Scott, Architect • Mark S. Pettit, Architect
300 MONTGOMERY AVENUE, OXNARD, CALIFORNIA 93036 | 805-988-0912 | FAX 805-981-4510 | www.la-arch.com

JMPE
ELECTRICAL ENGINEERING
LIGHTING DESIGN
CA REGISTRATION NO E13083
20033
627 OLIVE STREET
SANTA BARBARA CA 93101
(805) 569-3216
FAX (805) 569-2405
email : maloney@jmpe.net
www.jmpe.net

REGISTERED PROFESSIONAL ENGINEER
E013083
EXP. 06/30/2021
ELECTRICAL
STATE OF CALIFORNIA

CONCORD DRIVE APARTMENTS

2950 & 2956 CONCORD DRIVE
OXNARD, CA, 93036

CITY OF OXNARD HOUSING AUTHORITY

435 S. D STREET
OXNARD, CALIFORNIA 93030

NO	DESCRIPTION	DATE
1	SUBMITTAL	02-26-2020

ISSUE

JOB NO. 20-190708

DRAWN BY: -
CHECKED BY: -
PROJECT MANAGER: -
PRINT DATE:

ELECTRICAL SITE PLAN

EC-003

File Path

ELECTRICAL DEMOLITION NOTES

1. ALL DEVICES TO BE REMOVED, REMOVE ALL DEVICES, WIRING, BOXES, CONDUIT + FITTINGS COMPLETE.
2. WHERE REMOVED DEVICES SERVE DOWNSTREAM ONES TO REMAIN, RECONNECT THESE.

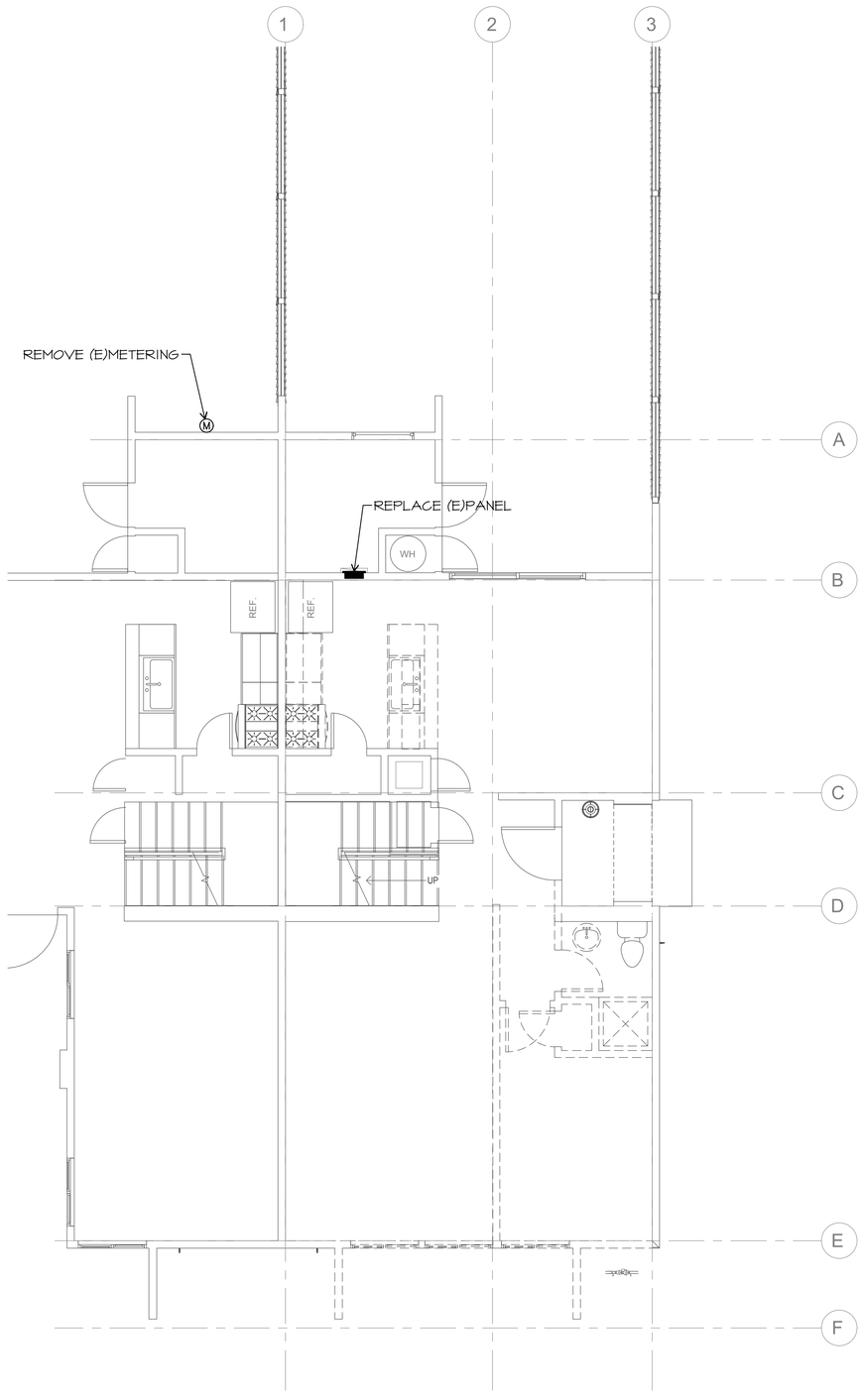

1 1ST FLOOR ELECTRICAL DEMOLITION PLAN

SCALE: 1/4" = 1'-0"

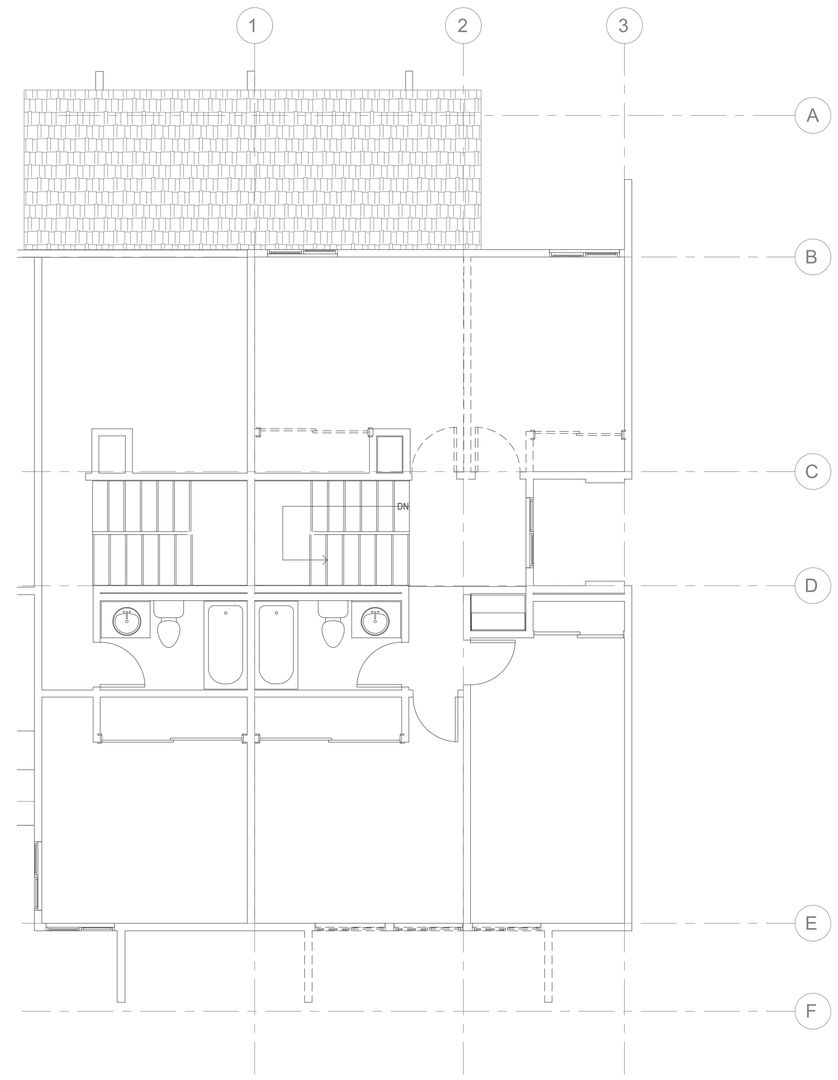

2 2ND FLOOR ELECTRICAL DEMOLITION PLAN

SCALE: 1/4" = 1'-0"

THESE DRAWINGS AND SPECIFICATIONS ARE THE PROPERTY AND COPYRIGHT OF LAUTERBACH & ASSOCIATES. ALL RIGHTS RESERVED, AND SHALL NOT BE USED ON ANY OTHER WORK OR PROJECT EXCEPT BY WRITTEN AGREEMENT WITH LAUTERBACH & ASSOCIATES. WRITTEN DIMENSIONS SHALL TAKE PRECEDENCE OVER SCALED DIMENSIONS AND SHALL BE VERIFIED ON THE JOB SITE. ANY DISCREPANCY SHALL BE BROUGHT TO THE NOTICE OF LAUTERBACH & ASSOCIATES PRIOR TO COMMENCEMENT OF ANY WORK.

Project Architect

LAUTERBACH & ASSOCIATES
ARCHITECTS INC.
David C. Kesterson, Architect • Ilona Scott, Architect • Mark S. Pettit, Architect
300 MONTGOMERY AVENUE, OXNARD, CALIFORNIA 93036 | 805-988-0912 | FAX 805-981-4510 | www.la-arch.com

JMPE
ELECTRICAL ENGINEERING
LIGHTING DESIGN
CA REGISTRATION NO E13083
20033
627 OLIVE STREET
SANTA BARBARA CA 93101
(805) 569-9216
FAX (805) 569-2405
email : maloney@jmpe.net
www.jmpe.net

REGISTERED PROFESSIONAL ENGINEER
JAMES MALONEY
E013083
EXP. 06/30/202
ELECTRICAL
STATE OF CALIFORNIA

CONCORD DRIVE APARTMENTS

2950 & 2956 CONCORD DRIVE
OXNARD, CA, 93036

CITY OF OXNARD HOUSING AUTHORITY

435 S. D STREET
OXNARD, CALIFORNIA 93030

NO	DESCRIPTION	DATE
1	SUBMITTAL	02-26-2020

ISSUE

JOB NO. 20-190708

DRAWN BY: -
CHECKED BY: -
PROJECT MANAGER: -
PRINT DATE:

DEMO FLOOR PLANS 1ST & 2ND

EC-100

File Path

ELECTRICAL NOTES

1. ALL OUTLETS IN DWELLING UNITS SHALL BE PROTECTED BY A LISTED ARC FAULT CIRCUIT INTERRUPTER, COMBINATION TYPE PER CEC 210.12
2. TAMPER RESISTANCE RECEPTACLE SHALL BE INSTALLED IN DWELLING UNITS PER CEC 406.11
3. SMOKE DETECTORS SHALL BE 120V, INTERCONNECTED, PHOTOELECTRIC/ION UNITS WITH BATTERY BACK UP

4. HALLWAY DETECTORS SHALL BE COMBINATION SMOKE AND CARBON MONOXIDE DETECTOR. PART #KIDDE KN-COSM-BA
5. VERIFY LOCATION OF FLUSH FLOOR RECEPTACLE PRIOR TO ROUGH IN
6. VACANCY SENSOR SWITCH SENSOR SWITCH #WSD-PDT-WH
7. DIMMER
8. 2 POLE VACANCY SENSOR SWITCH SENSOR SWITCH #WSD-2P-PDT-WH FAN

9. RESIDENCE SHALL BE PROTECTED BY APPROVED FIRE WARNING SYSTEM PER NFPA 72
10. EXHAUST FAN WITH MOTION & HUMIDITY CONTROL

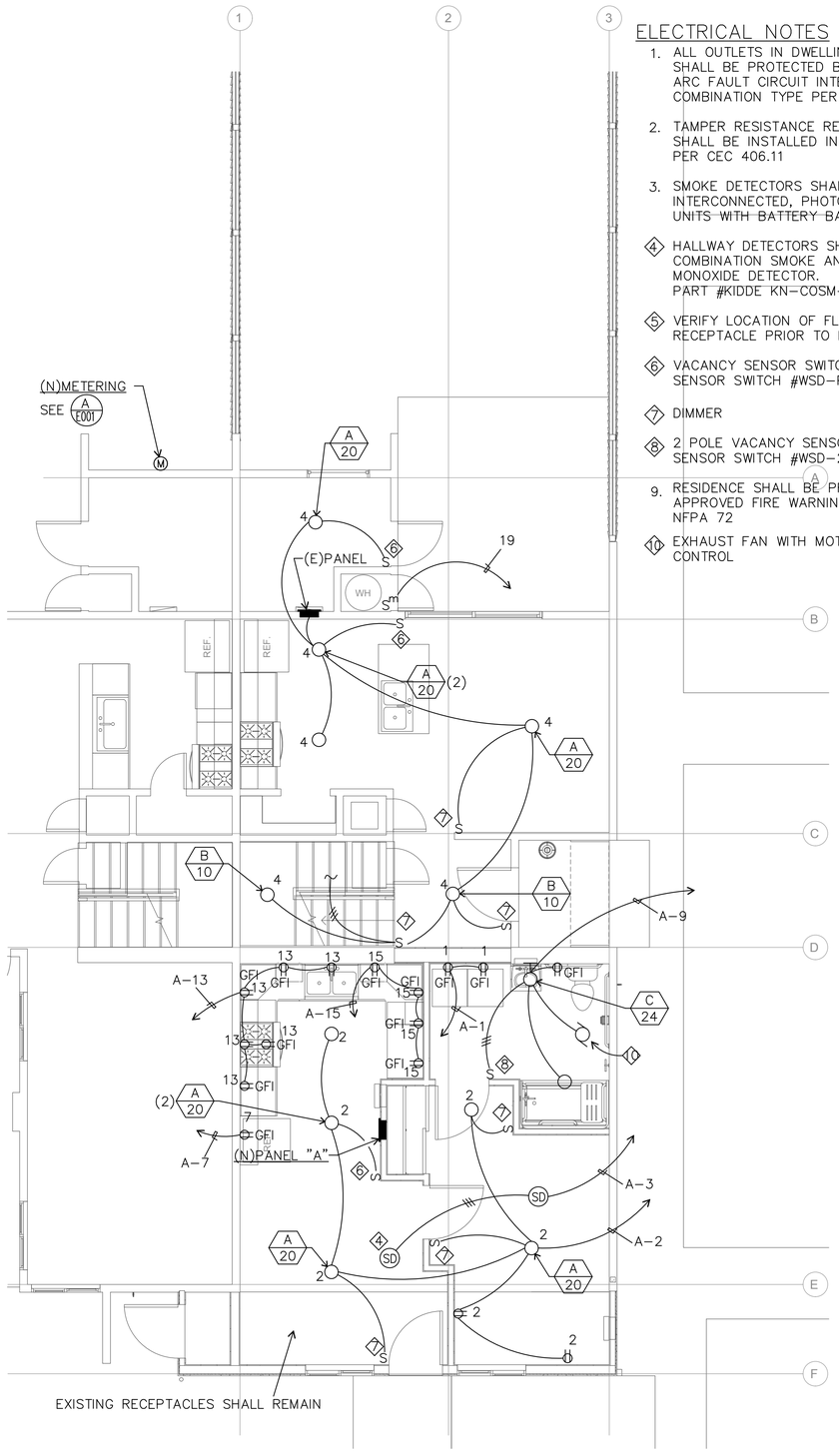

1 1ST FLOOR ELECTRICAL PLAN
SCALE: 1/4" = 1'-0"

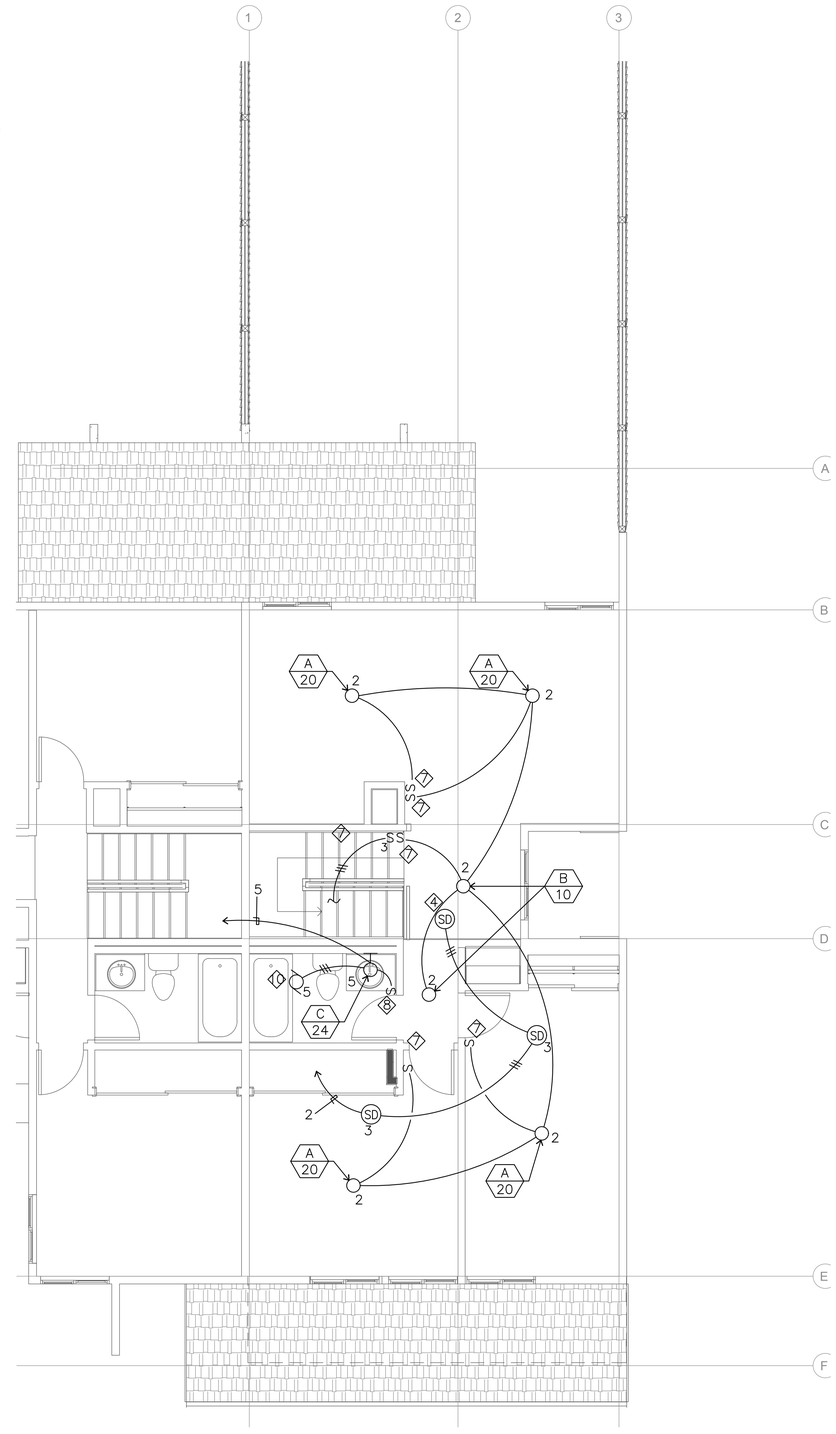

2 2ND FLOOR ELECTRICAL PLAN
SCALE: 1/4" = 1'-0"

Project Architect
LAUTERBACH & ASSOCIATES
ARCHITECTS, INC.
David C. Kesterson, Architect • Ilona Scott, Architect • Mark S. Pettit, Architect
300 MONTGOMERY AVENUE, OXNARD, CALIFORNIA 93036 | 805-988-0912 | FAX 805-981-4510 | www.la-arch.com

JMPE
ELECTRICAL ENGINEERING
LIGHTING DESIGN
CA REGISTRATION NO E13083
20033
627 OLIVE STREET
SANTA BARBARA CA 93101
(805) 569-9216
FAX (805) 569-2405
email : maloney@jmpe.net
www.jmpe.net
REGISTERED PROFESSIONAL ENGINEER
EDWARD MALONEY
EXP. 06/30/2021
ELECTRICAL
STATE OF CALIFORNIA

CONCORD DRIVE APARTMENTS

2950 & 2956 CONCORD DRIVE
OXNARD, CA, 93036

CITY OF OXNARD HOUSING AUTHORITY

435 S. D STREET
OXNARD, CALIFORNIA 93030

NO	DESCRIPTION	DATE
1	SUBMITTAL	02-26-2020

ISSUE

JOB NO. 20-190708

DRAWN BY: -
CHECKED BY: -
PROJECT MANAGER: -
PRINT DATE:

ELECTRICAL FLOOR PLANS - 1ST & 2ND

EC-101

THESE DRAWINGS AND SPECIFICATIONS ARE THE PROPERTY AND COPYRIGHT OF LAUTERBACH & ASSOCIATES. ALL RIGHTS RESERVED, AND SHALL NOT BE USED ON ANY OTHER WORK OR PROJECT EXCEPT BY WRITTEN AGREEMENT WITH LAUTERBACH & ASSOCIATES. WRITTEN DIMENSIONS SHALL TAKE PRECEDENCE OVER SCALED DIMENSIONS AND SHALL BE VERIFIED ON THE JOB SITE. ANY DISCREPANCY SHALL BE BROUGHT TO THE NOTICE OF LAUTERBACH & ASSOCIATES PRIOR TO COMMENCEMENT OF ANY WORK.

ACCESSIBILITY REMODEL PROJECT AT FASHION PARK AND CONCORD PUBLIC HOUSING SITES

Emilio Ramirez, Director
Housing Department

Community Services, Public Safety, Housing & Development Committee
July 25, 2023

CITY OF OXNARD CALIFORNIA

BACKGROUND

1. Multiphase conversion project to bring the Housing Authority of the City of Oxnard into compliance with Section 504 of the American Disabilities Act
2. Demolition at Colonia Village resulted in loss of 44 accessible units (minimum requirement is 24)
3. Location of proposed projects: Fashion Park Place & Concord Drive
4. Existing two-story, five-bedroom units will be converted into two units. One will be an accessible and the other will be a regular unit
5. Project included in Capital Fund Program Five-Year Action Plan

31-74 Fashion Park

31-73 Concord Drive

RECOMMENDATIONS

That the Community Services, Public Safety, Housing & Development Committee recommend that the Board of Commissioners of the Housing Authority of the City of Oxnard approve and authorize execution of the following firm-fixed price contracts:

1. Agreement number A-8532 in the amount of $1,832,249.88 with MDJ Management using funds previously appropriated from the 2023 Capital Fund grant for Section 504 compliance with the American disabilities Act for properties located at 234 Fashion Park Place, 251 Fashion Park Place, and 257 Fashion Park Place.

2. Agreement number A-8533 in the amount of $1,221,499.92 with MDJ Management using funds previously appropriated from the 2022 Capital Fund grant for Section 504 compliance with the American disabilities Act for properties located at 2950 Concord Drive and 2956 Concord Drive.

CITY OF
OXNARD
CALIFORNIA

End of Presentation