Written materials relating to an item on this agenda that are distributed to the legislative bodies within 72 hours before the item is to be considered at its regularly scheduled meeting will be made available for public inspection at the City Clerk's Office, 300 West Third Street 4th Floor during customary business hours. Agenda reports are also on the City of Oxnard web site at www.oxnard.org.

CITY OF OXNARD CALIFORNIA

AMENDED AGENDA
Item L.4 Info/Consent - added

AGENDA
OXNARD CITY COUNCIL
OXNARD COMMUNITY DEVELOPMENT COMMISSION SUCCESSOR AGENCY
OXNARD FINANCING AUTHORITY
OXNARD HOUSING AUTHORITY

Meeting Location: Council Chambers, 305 West Third Street
September 19, 2023
Closed Session - 4:30 PM
Appointment Items - 5:00 PM
Regular Meeting - 6:00 PM

Zoom details to call-in for public comment during a meeting:

1. Dial Phone Number: (888) 475-4499
2. Enter Meeting ID: 821 2060 1894
3. Passcode: 381787

If you wish to speak during public comments or a particular item on the agenda, please sign-on by following the zoom call-in steps listed above. Once the presiding officer calls for public speakers, press *9 to raise your hand to inform the City Clerk you would like to speak during the public speaking section for that particular item on the agenda, while in the zoom waiting room. Press *6 when asked to unmute. Listen to the instructions provided virtually on the phone while on hold in the zoom waiting room. Please note that there is a slight time delay when viewing the meeting via television.

IN ACCORDANCE WITH ASSEMBLY BILL 2449, MEMBERS OF THE LEGISLATIVE BODY MAY MEET IN-PERSON OR REMOTELY. TO PARTICIPATE REMOTELY VISIT WWW.OXNARD.ORG.

To find out how you may provide public comment, please refer to the instructions below or at **www.https://www.oxnard.org/city-meetings/**.

The public may view the meeting from home on Spectrum channel 10, Frontier channel 35, or YouTube at Youtube.com/oxnardnews. Video recordings of the meeting are typically available online following the meeting at the City's website at www.oxnard.org/city-meetings.

*Please see the link for the Measure M pre-recorded presentation video for each item listed on this agenda.

YOU MAY PARTICIPATE IN THE MEETING IN THE FOLLOWING WAYS:

1. ATTEND THE MEETING AT THE LOCATION LISTED ABOVE: Submit a speaker card to the City Clerk.

2. EMAIL COMMENTS OR SIGN UP TO SPEAK REMOTELY BEFORE THE MEETING

   a. Submit a request to speak remotely by 3 p.m. on the day of the meeting by using the form available at **www.oxnard.org/citymeetings**.
   b. Submit an email to **cityclerk@oxnard.org** by 3 p.m. on the day of the meeting (indicate the agenda item number in the subject line). All email correspondence will be forwarded to the legislative body prior to the start of the meeting and made part of the legislative record.

In compliance with the Americans with Disabilities Act, if you require special assistance to participate in a meeting, please contact the City Clerk's Office at 385-7803. Notice at least 72 hours prior to the meeting will enable the City to reasonably arrange for your accessibility to the meeting.

Agenda Item Time Estimates include: (Minutes for Presentation + Council Discussion + Public Comment)

c. Contact the City Clerk's Office at (805) 385-7803 to submit your request.

3. PROVIDE PUBLIC COMMENT REMOTELY DURING THE MEETING

a. Follow Zoom details listed above.
b. Public comments on agenda items will be taken following the announcement of the item. After the item is announced, members of the public may register or otherwise be recognized for the purpose of providing public comment.

Please review the Zoom instructions on the registration page to help ensure there are no technical difficulties during your comments and help you understand public comment procedures using Zoom. Detailed participation instructions can be found at www.oxnard.org/city-meetings.

In the event of a disruption which prevents a legislative body of the City of Oxnard from broadcasting a meeting using a call-in option or internet-based service option, or in the event of a disruption within the City's control which prevents members of the public from offering public comment using the call-in option or internet-based service option, the legislative body shall take no further action on items appearing on a meeting agenda until public access to the meeting via the call-in option or internet-based service option is restored. However, if any of the broadcast options are disrupted, but any of the other broadcast options is still available to the public, the legislative body may take further action on items appearing on a meeting agenda without waiting for the disrupted broadcast option(s) to be restored.

A. ROLL CALL, POSTING OF AGENDA
THE FOLLOWING LEGISLATIVE BODIES ARE MEETING: City Council and Oxnard Housing Authority
CONSIDERATION OF TELECONFERENCE PARTICIPATION PURSUANT TO ASSEMBLY BILL 2449

B. PUBLIC COMMENTS ON CLOSED SESSION ITEMS
At this time, a person may address the legislative body only on matters appearing on the closed session agenda. The presiding officer shall limit public comments to three minutes.

C. CLOSED SESSION (4:30 PM)

1. CONFERENCE WITH LEGAL COUNSEL—EXISTING LITIGATION (Government Code Section 54956.9(d)(1))
Name of case: Roberto Gonzalez v. City of Oxnard
Workers' Compensation Case Nos. ADJ8859935
Legislative Body: Oxnard Housing Authority

D. APPOINTMENT ITEMS (5:00 PM)

1. Cultural & Community Services Department
SUBJECT: Reinventing the Library
RECOMMENDATION: That the City Council receive a report on Reinventing the Oxnard Library System
Legislative Body: City Council
Contact: Terrel Harrison, (805) 385-7994

E. OPENING CEREMONIES (6:00 PM)
Pledge of allegiance to the flag of the United States.

F. CEREMONIAL ITEMS

1. SUBJECT: Presentation of a Proclamation Designating the Week of September 17 - 23, 2023 as "Constitution Week."

2. SUBJECT: Presentation of a Commendation to El Rio 12U All Stars for winning the 2023 12U Western B National Championship.

G. PUBLIC COMMENTS ON ITEMS NOT ON THE AGENDA

A person may address the legislative body only on matters not appearing on the agenda and within the subject matter jurisdiction of the legislative body. Speaker requests shall be submitted as set forth on the first page of this agenda. Speakers are limited to three minutes. After 30 minutes, if all speakers have not had the opportunity to speak, the remaining speakers will be given an opportunity to speak prior to adjournment of the meeting. The legislative body cannot enter into a detailed discussion or take action on any items presented during public comments at this time. Such items may only be referred to the City Manager/Executive Director/Secretary for administrative action or scheduled on a subsequent agenda for discussion. Persons wishing to speak on public hearing items should do so at the time of the hearing.

H. REPORT OF CITY MANAGER/EXECUTIVE DIRECTOR/SECRETARY

The City Manager/Executive Director/Secretary shall report on items of interest to the legislative body occurring since the last meeting. The legislative body cannot enter into detailed discussion or take action on any item presented during this report. Such items may only be referred to the City Manager/Executive Director/Secretary for administrative action or scheduled on a subsequent agenda for discussion.

1. City Manager Department

SUBJECT: Local Government Fun Fact: Comparative Cities Demographics.

RECOMMENDATION: That the Public and City Council receive a City Manager discussion about Oxnard's statistics as compared with other cities in the region.

Legislative Body: City Council

Contact: Alexander Nguyen, (805) 385-7430

I. CITY COUNCIL/HOUSING AUTHORITY/SUCCESSOR AGENCY/FINANCING AUTHORITY BUSINESS/COMMITTEE REPORTS

At this time, a member of the legislative body may make a brief announcement, or make a brief report on his or her activities. Further, members of the legislative body may request to schedule consideration of whether to place an item on a future agenda. The legislative body cannot enter into detailed discussion or take action on any item presented during this report. The member's report shall not exceed three minutes, unless additional time is granted by the presiding officer.

J. REVIEW OF INFORMATION/CONSENT AGENDA

The members of the legislative body will consider whether to remove Information/Consent Agenda items for discussion later during the meeting.

K. PUBLIC COMMENTS ON INFORMATION/CONSENT AGENDA

At this time, a person may address the legislative body only on matters appearing on the information/consent agenda. The presiding officer shall limit public comments to three minutes.

L. INFORMATION/CONSENT AGENDA

1. Housing Department

SUBJECT: Accessibility Remodel Project at Fashion Park and Concord Sites.

RECOMMENDATION: That the Board of Commissioners of the Housing Authority of the City of Oxnard approve and authorize execution of the following firm-fixed price contracts:

1. Agreement number A-8532 in the amount of $1,832,249.88 with MDJ Management using funds

previously appropriated from the 2023 Capital Fund grant for Section 504 compliance with the American Disabilities Act for properties located at 234 Fashion Park Place, 251 Fashion Park Place, and 257 Fashion Park Place.

2. Agreement number A- 8533 in the amount of $1,221,499.92 with MDJ Management using funds previously appropriated from the 2022 Capital Fund grant for Section 504 compliance with the American Disabilities Act for properties located at 2950 Concord Drive and 2956 Concord Drive.

(The Community Services, Public Safety, Housing & Development Committee approved 2-0 on July 25, 2023 to approve the staff recommendation and to forward the item for Council approval.)
Legislative Body: Board of Commissioners of the Housing Authority of the City of Oxnard
Contact: Emilio Ramirez, (805) 385-8094

2. Housing Department
SUBJECT: Second Amendment to Agreement 9292-21-HO for Security Services.
RECOMMENDATION: That the Board of Commissioners of the Housing Authority of the City of Oxnard approve and authorize the execution of a Second Amendment to Agreement 9292-21-HO with Alltech Industries, Inc. in the amount of $99,250.80 for a total agreement value of $302,649.12 using funds from the Low Rent Public Housing Operating Funds budget and Housing Choice Voucher Administrative Fees budget.

(This item did not originate in Committee. The terms of the original agreement were considered by Board of Commissioners on September 7, 2021.)
Legislative Body: Board of Commissioners of the Housing Authority of the City of Oxnard
Contact: Emilio Ramirez, (805) 385-8094

3. City Attorney Department
SUBJECT: Omnibus City Code Update
RECOMMENDATION: That the City Council adopt an ordinance titled:

"AN ORDINANCE OF THE CITY COUNCIL OF THE CITY OF OXNARD AMENDING VARIOUS SECTIONS OF THE OXNARD CITY CODE TO ADDRESS CHANGES IN STATE LAW, CORRECT ERRORS, AND UPDATE GENDER-NEUTRAL REFERENCES."

(The Finance & Governance Committee approved 3-0 on July 25, 2023)
Legislative Body: City Council
Contact: Stephen Fischer, (805) 385-7483

4. Housing Department
SUBJECT: Encampment Resolution Grant. (10 minutes)
RECOMMENDATION: That the City Council:

1. Find that there is a need to take immediate action on the following item and that the need for action came to the attention of City staff subsequent to this agenda being posted (2/3 vote required); and

If the City Council makes this finding, that the City Council:

2. Approve receipt of an Encampment Resolution Fund grant from the State of California in the amount of $4,015,638.88 to respond to the continuing need at the homeless encampments located on McWane Boulevard and at Fifth Street east of Harbor Boulevard;

3. Authorize the City Manager, or designee, to execute the Standard Agreement and corresponding documents with the State of California for the receipt and use of the Encampment Resolution Fund grant;

4. Approve and authorize the City Manager, or designee, to execute an agreement with the County of Ventura and the Ventura County Continuum of Care for partnership with delivery of encampment response in an amount not to exceed $663,448.26;

5. Approve and authorize the City Manager, or designee, to execute a Consultant Professional Services agreement with LeSar Support Services for grant administration in an amount not to exceed $90,000 for one year, with the option to extend the agreement for up to four additional one-year terms; and

6. Authorize the City Manager, or designee, to approve budget appropriations for the use of grant funds.

(This item did not originate in Committee.)
Legislative Body: City Council
Contact: Emilio Ramirez, (805) 385-8094

M. PUBLIC HEARINGS

1. Community Development Department
SUBJECT: Continuance of Noticed Public Hearing to Date Certain.
RECOMMENDATION: That the City Council continue the noticed public hearing on Planning & Zoning (PZ) Permit No. 23-580-02 (Zoning Text Amendments (ZTA) to the existing regulation of commercial cannabis manufacturing, distribution, testing, and retail dispensaries and creation of indoor commercial cannabis cultivation regulations) to the October 3, 2023 Council Meeting.
Legislative Body: City Council
Contact: Maureen Tamuri, (805) 385-7882

N. REPORTS

1. Public Works Department
SUBJECT: County of Ventura Funding Agreement A-8534 for Channel Islands Harbor Water Quality Remediation. (10 minutes)
RECOMMENDATION: That the City Council:

1. Approve and authorize the Mayor to execute a funding Agreement with the County of Ventura, wherein the County shall pay an amount not to exceed $1,300,000 to the City for portions of water quality expenses in Channel Islands Harbor; and
2. Recognize the $1,300,000 funding as a contribution from the County to the General Fund (101), and therefrom appropriate $300,000 to ARPA Harbor Quality Feasibility Project (G2232) and $1,000,000 to the ARPA Harbor Water Quality Mitigation Project (M2211).

This item did not originate in Committee as it is a project previously approved by the City Council through the ARPA project selection process.

Please click the following link to view the required Measure M pre-recorded presentation video:
https://youtu.be/9tjkr7I8aU8
Legislative Body: City Council
Contact: Michael Wolfe, (805) 385-8055

2. Public Works Department
SUBJECT: Second Amendment to Trade Services Agreement A-8230 with Sweeping Corporation of America of California for Citywide Street Sweeping Services. (10 minutes)
RECOMMENDATION: That the City Council approve and authorize:

1. The Mayor to execute a Second Amendment to an Agreement with Sweeping Corporation of America of California (SCA) for citywide street sweeping services, alleyways, parking lots, parking structures and city facilities; extending the term for nine (9) months from October 1, 2023 to June 30, 2024 and increasing the contract total by $2,050,000 for a new contract total not to exceed: $3,850,000 to comply with new State of California mandate for prevailing wage; and
2. A budget appropriation request in the amount of $1,292,312 from the General Fund (101) available fund balance for the Public Works Department for this Amendment in FY 2023-24.

(This is a continuation of an agreement that originated in Committee on September 8, 2020, and was approved by Council on October 6, 2020)

Please click the following link to view the required Measure M pre-recorded presentation video:
https://youtu.be/hV5bfQMQj4o
Legislative Body: City Council
Contact: Michael Wolfe, (805) 385-8055

3. City Manager Department
SUBJECT: Approval of a Funding Agreement between the City and the County of Ventura for the New Family Justice Center in Oxnard. (10 minutes)
RECOMMENDATION: That the City Council:

1. Adopt a Resolution authorizing the Mayor to execute a Funding Agreement with the County of Ventura for $2,000,000 for the purchase of the building located at 554-555 South A Street for the Oxnard Family Justice Center; and
2. Authorize the City Manager or designee to execute the necessary actions to effectuate the transfer of funds.

This item did not originate in Committee as it is a project previously approved by the City Council through the ARPA project selection process.

Please click the following link to view the required Measure M pre-recorded presentation video:
https://youtu.be/lV6NotCHTRg
Legislative Body: City Council

Contact: Alexander Nguyen, (805) 385-7430

O. ADJOURNMENT

CITY COUNCIL AGENDA REPORT

APPOINTMENT ITEMS (5:00 PM)
AGENDA ITEM NO. D.1

DATE: September 19, 2023

TO: City Council

FROM: Terrel Harrison, Cultural & Community Services Director, (805) 385-7994, terrel.harrison@oxnard.org

SUBJECT: Reinventing the Library

RECOMMENDATION

That the City Council receive a report on Reinventing the Oxnard Library System

BACKGROUND

The City of Oxnard operates three (3) library branches: Oxnard Public Library (Main/Downtown), South Oxnard Branch Library, Colonia Branch Library. Historically the purpose of libraries has been a treasury of literature; a place for research, stories, and a quiet space. Patrons have moved away from the printed page to a digital screen to access stories, information, and to communicate. Nationwide Librarians have redefined their spaces as engaging community spaces, adding a number of services and programs that had not traditionally been seen as a library service. Librarians are rebranded themselves as individuals that can serve as hands-on program leaders as well as curators. The Oxnard library system has not made this shift, which began occurring in approximately 2010.

With key vacant management positions, including the Library Director position, existing technology needs, pending facility repairs, the City is in a great position to reinvent the library system in Oxnard to meet our community needs.

DISCUSSION:

Information Gathering Tours

At the City Manager's request, the Friends of the Library (FOL) funded and participated in an information gathering tour visiting libraries awarded for their innovative library design and services, program offerings, and ability to connect with the community. Cultural & Community Services Assistant Director Renee Rakestraw and Onieta Hirata from the FOL visited the Missoula (MT) Public Library, the Beverly Hills (CA) Public Library, the Culver City (CA) Public Library, and the San Diego (CA) Central Library. With each visit there was an opportunity to meet with the Director and staff, tour the facility, and get an indepth look at programs along with an opportunity to reflect on the growth/changes that these locations faced in recent years allowing the team to return with an in-depth perspective of innovative libraries. Each library provided their own inspiration as to how the Oxnard Public Library can modernize and expand services.The information tours to these acclaimed libraries provided examples of how libraries are more than a repository of books, and provided insight on how to create innovative spaces within our existing library. The potential to create makerspaces, recreational program space, and interactive learning spaces will transform the experience of the library within the community, fostering their engagement and involvement. The following is a brief summary of the findings of each location.

<u>Missoula Public Library</u>

This library was voted the 2022 International Library of the year by the International Federation of Library Associations World Congress. Innovative spaces include genealogical resources, children's learning labs, a demonstration kitchen, a

makerspace with 3-D printers and scanners, as well as a laser cutter, film digitization, and sewing machines. There is a Library of Things to check out items such as digital cameras, cookware and utensils, and book kits for individual book clubs. Chromebooks are available for checkout for use within the library. A dedicated safety team conducts training specifically for the library environment and arranges support services for the unhoused population. Partnerships with the University of Montana, Missoula and non-profits are instrumental in providing programming and support services within the library. They are physically integrated within the spaces of the library.

Beverly Hills Public Library

This library underwent a revamp 10 years ago that has created an exciting children's area equipped with themes and family play areas. There are two study rooms in the children's library for tutoring services as well as presentations designed for children on how to use the library. There is a Friends of the Library bookstore as well as a café within the library. An easy to access circulation area along with librarians walking about while carrying ipads to quickly assist any patron showed customer service was a priority.

Culver City Public Library

This facility located within a neighborhood and near schools made it accessible to that community. This library appears to be a destination for many senior citizens from the area and is well-visited. The Friends of the Library have a space within the library to sell books. This location was one of the few where we witnessed stationary computers in great use. Computer stations situated within the children's area and ipads serving as catalogs are located on ends of bookshelves to assist with looking up books.

San Diego Central Public Library

This location was the final stop and truly a culmination of all stops. The facility was built with intention and staffing is truly what makes the services dynamic. The executive team was picked with each individual coming with a diverse background and in turn so were the staff. Dynamic programming from a baseball history space to an Art Studio and concerts on the top floor to a Dr. Seuss children's themed area.

REINVENTING THE OXNARD LIBRARY SYSTEM

The exact programs offered at dynamic libraries vary city to city to meet the community needs, but what is consistent is that programs focus on learning, sharing ideas, creative places, and resources for the community. Regardless of socioeconomic status, people across a community were able to engage in knowledge sharing, personal and professional development, and community activities at their local library.

Seeing innovation programs and speaking with library directors at these acclaimed libraries shaped our recruitment efforts for a Library Director. The recruitment focused on leaders that focus on hands-on program leaders that focus on libraries being places learning, exchanging of ideas, creativity, and a resource for our community. Saff is in the final stages of the Library Director recruitment. This leader will be tasked with reinventing the Oxnard library system, developing metrics and measuring success

STRATEGIC PRIORITIES

This agenda item supports the Quality of Life strategy. The purpose of the Quality of Life strategy is to restore and increase quality services and programs that enrich Oxnard's diverse community, promotes safe neighborhoods, encourages community engagement, and supports our residents in their efforts to improve their quality of life.

FINANCIAL IMPACT

There is no financial impact associated with this report.

COMMITTEE OUTCOME

This item did not originate in Committee.

Prepared by: Renee Rakestraw, Community Services Manager

ATTACHMENTS

1. Library Update 2023

Reinventing the Oxnard Public Library

City Council
September 19, 2023

Renee Rakestraw, Assistant Director
Cultural & Community Services

CITY OF OXNARD CALIFORNIA

BACKGROUND

The City of Oxnard operates three (3) library branches:

Oxnard Public Library (Main/Downtown)

South Oxnard Branch Library

Colonia Branch Library

BACKGROUND

- Oxnard Public Library, a treasury of literature - a quiet place for literature, research and stories
- Library services moved away from the printed page to a digital screen to access (over 10 years ago!)
- Nationwide Librarians have been redefining spaces and serve as hands-on program leaders as well as curators

OXNARD IS BEHIND THE TIMES!

INFORMATION GATHERING TOURS

- Library Director retired in March 2022- Assistant Director Interim Library Manager

- Great opportunity to explore successful libraries to inform our recruitment for the Library Director.

- Friends of the Library funded and participated in an information gathering tour to four libraries.

INFORMATION GATHERING TOURS

Missoula Public Library | MT

Beverly Hills Public Library | CA

Culver City Julian Dixon Library | CA

San Diego Central Library | CA

INFORMATION GATHERING TOURS

Missoula Public Library | MT

Beverly Hills Public Library | CA

San Diego Central Library | CA

Culver City Julian Dixon Library | CA

Innovative Spaces

- Genealogical Resources
- Children's Learning Labs
- Demonstration Kitchen

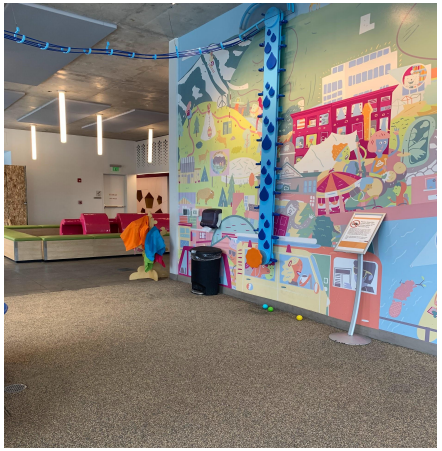

Innovative Spaces

- Makerspace
  - 3D Printers & Laser Cutters
  - Film Digitization
  - Sewing Machines
- Library of Things
  - Digital Cameras & Chromebooks
  - Cookware & Utensils
  - Book Club Book Kits

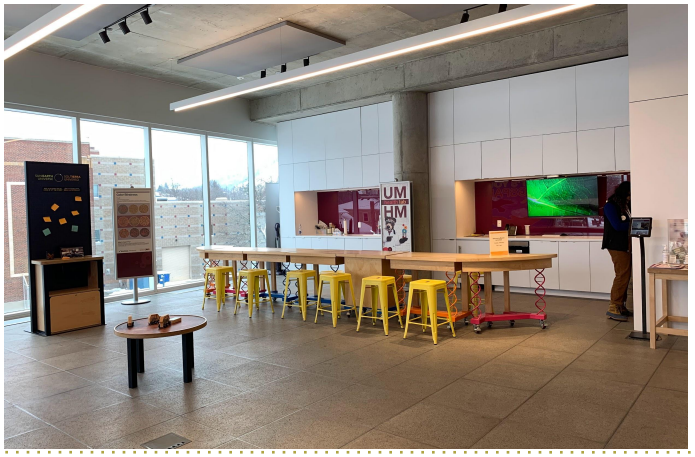

MISSOULA PUBLIC LIBRARY

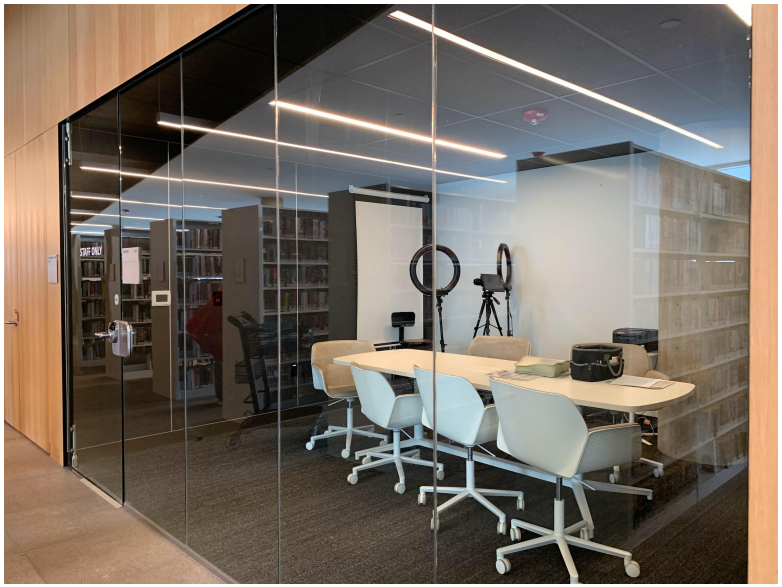

MISSOULA PUBLIC LIBRARY

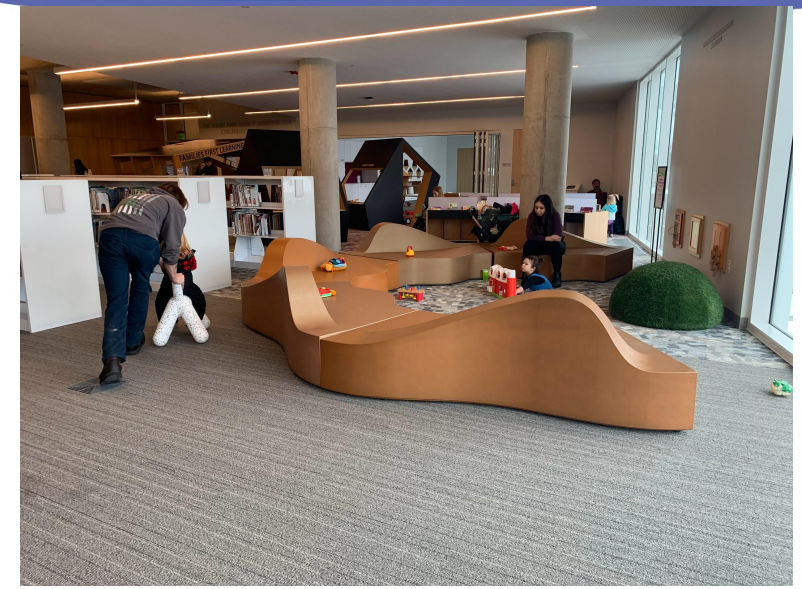

INFORMATION GATHERING TOURS

Beverly Hills Public Library | CA

Missoula Public Library | MT

San Diego Central Library | CA

Culver City Julian Dixon Library | CA

BEVERLY HILLS PUBLIC LIBRARY

- 2 Children's Library Study Rooms
  - Tutoring
  - "How to use the Library" children's presentations
- Friends of the Library Bookstore
- Cafe
- Customer Service Focus
  - **staff roaming with ipads to quickly serve customers**

BEVERLY HILLS PUBLIC LIBRARY

INFORMATION GATHERING TOURS

Culver City Julian Dixon Library | CA

Missoula Public Library | MT

Beverly Hills Public Library | CA

San Diego Central Library | CA

CULVER CITY JULIAN DIXON LIBRARY

- Destination for Seniors
- High use of stationary computers
- Customer Service Driven
  - Catalog search via iPads located on the sides of the bookshelves

CULVER CITY JULIAN DIXON LIBRARY

INFORMATION GATHERING TOURS

San Diego Central Library | CA

Missoula Public Library | MT

Beverly Hills Public Library | CA

Culver City Julian Dixon Library | CA

SAN DIEGO CENTRAL LIBRARY

- Recruitments focus on diversity of staff
- Dynamic Programming
  - Baseball History
  - Art Studio
  - Dr. Seuss Childrens Area

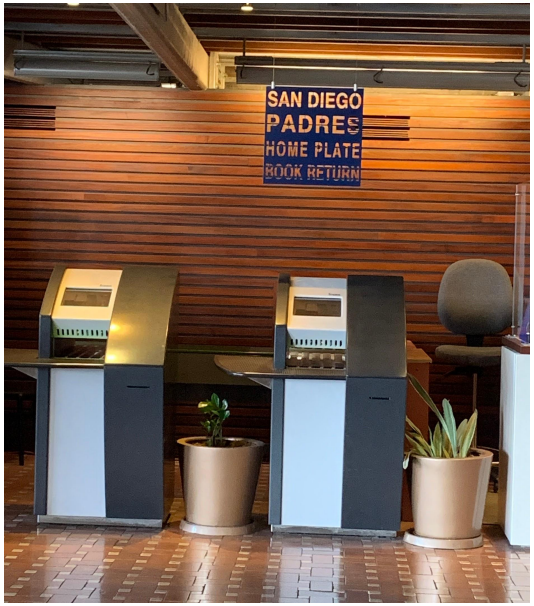

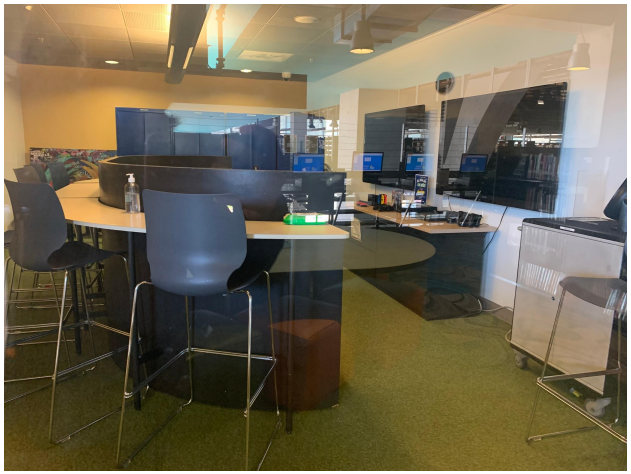

SAN DIEGO CENTRAL LIBRARY

- Partnership Services
  - Veterans Resource Center
  - Homeless & Mental Health Outreach

SAN DIEGO CENTRAL LIBRARY

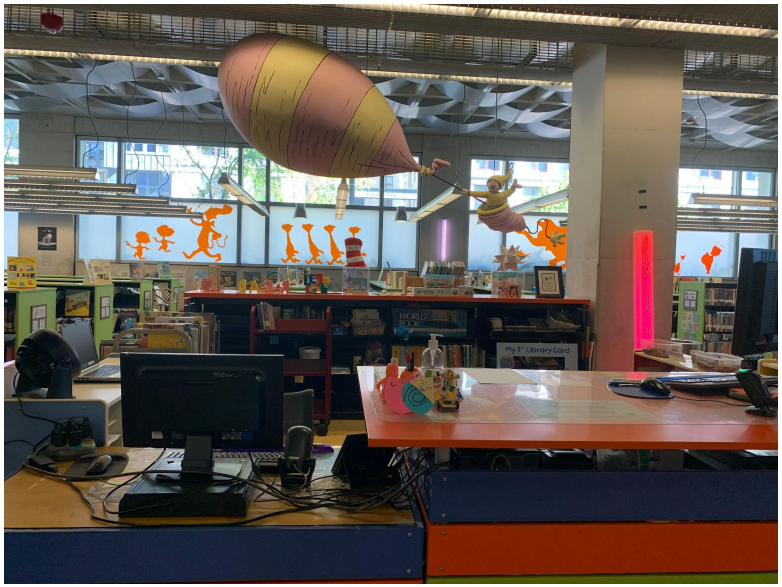

SAN DIEGO CENTRAL LIBRARY

CITY OF
OXNARD
CALIFORNIA

THE END

CITY COUNCIL AGENDA REPORT

INFORMATION/CONSENT AGENDA
AGENDA ITEM NO. L.1

DATE: September 19, 2023

TO: Board of Commissioners of the Housing Authority of the City of Oxnard

FROM: Emilio Ramirez, Housing Director, (805) 385-8094, emilio.ramirez@oxnard.org

SUBJECT: Accessibility Remodel Project at Fashion Park and Concord Sites.

RECOMMENDATION

That the Board of Commissioners of the Housing Authority of the City of Oxnard approve and authorize execution of the following firm-fixed price contracts:

1. Agreement number A-8532 in the amount of $1,832,249.88 with MDJ Management using funds previously appropriated from the 2023 Capital Fund grant for Section 504 compliance with the American Disabilities Act for properties located at 234 Fashion Park Place, 251 Fashion Park Place, and 257 Fashion Park Place.

2. Agreement number A- 8533 in the amount of $1,221,499.92 with MDJ Management using funds previously appropriated from the 2022 Capital Fund grant for Section 504 compliance with the American Disabilities Act for properties located at 2950 Concord Drive and 2956 Concord Drive.

(The Community Services, Public Safety, Housing & Development Committee approved 2-0 on July 25, 2023 to approve the staff recommendation and to forward the item for Council approval.)

BACKGROUND

This project is part of a multi-phase conversion project that will bring the Housing Authority of the City of Oxnard into compliance with Section 504 of the American Disabilities Act, which establishes a minimum number of dwelling units that must be accessible for individuals with disabilities. As a result of demolishing units at Colonia Village, the Housing Authority of the City of Oxnard lost forty-four accessible units.

The Housing Authority of the City of Oxnard must convert a minimum of twenty-four units to be compliant with the American Disabilities Act. The to be converted units have been selected from each public housing site based on ease of conversion, availability of space and cost effectiveness. Two units have been converted into 504 compliant units at the Pleasant Valley public housing site and five units have been converted at the Plaza Vista public housing site. Currently, there is a 504 compliant unit conversion underway at the Althea public housing site. After the proposed units are converted, the Housing Authority of the City of Oxnard will have to complete twelve additional conversions.

This project involves the accessibility remodeling of existing, two-story, five-bedroom units, which will each be converted into two units. The first-floor unit will be 504 compliant but the second floor will be a regular unit. A total of three units are being remodeled at the Fashion Park public housing site and two units at the Concord public housing site. Once work is completed, there will be five regular two-bedroom units and five 504 compliant one-bedroom units. This conversion project was anticipated and planned for the Housing Authority of the City of Oxnard's Capital Fund Program Five-Year Action Plan originally adopted on April 6, 2021.

DISCUSSION

The Housing Authority of the City of Oxnard is a member of Sourcewell (formerly known as the National Joint Powers Alliance), which competitively bids for construction tasks with pre-set unit prices and specifications for general construction services including materials, equipment, and labor costs. The California Government Code authorizes public agencies to participate in cooperative purchasing agreements like those established by Sourcewell, while still complying with the local procurement policies. This project is subject to wage requirements of the Davis-Bacon and Related Acts (29 CFR Part 5) and the Section 3 Act of 1968 (24 CFR Part 75).

Staff engaged Gordian, which is authorized by Sourcewell to provide consulting services, to procure a general contractor to complete the contemplated renovation work.

A description of the proposed accessibility remodels at the Fashion Park and Concord site includes:

1. Demolition of existing apartments, work to be performed by a certified hazardous material demolition company
2. Saw cutting of slab, demolition of concrete, and excavation for new plumbing
3. All framing, drywalling, interior paint, flooring, and medium density fiberboard baseboards
4. New electrical and plumbing rough
5. Concrete work (footings and slab for addition, pour back open trenches and sidewalk as required)
6. HVAC ductwork, registers, wall heaters (new forced air unit)
7. New windows, doors, insulation, flooring, kitchens, countertops, fixtures, sinks, appliances, and bathroom fixtures
8. Lath, stucco, roofing, fascia, gutters for new addition, exterior paint of building
9. Site Work: new sidewalks, handicap ramp with truncated domes, handicap striping, signage of handicap stall
10. Remove and replace: all outlets, switches, exterior lighting, interior doors
11. Clean up existing backyard
12. Remove and replace one section of existing vinyl fence to meet ADA width requirements

MDJ Management submitted proposals for the amount of $610,749.96 per unit to be remodeled. Staff reviewed proposals and recommend approval.

STRATEGIC PRIORITIES

This agenda item supports the Quality of Life strategy. The purpose of the Quality of Life strategy is to restore and increase quality services and programs that enrich Oxnard's diverse community, promotes safe neighborhoods, encourages community engagement, and supports our residents in their efforts to improve their quality of life.

FINANCIAL IMPACT

This item does not impact any City Fund. The funding for Agreement A-8532 will be from the Housing Authority of the City of Oxnard 2023 Capital Fund Grant. The total Capital Fund allocation was $2,626,497. After deducting debt service, management fees and the cost of this agreement the remaining fund balance will be $90,000. The funding for Agreement A-8533 will be from the 2022 Capital Fund Grant which was for a total allocation of $2,535,857. After deducting debt service, management fees and the cost of this agreement the remaining fund balance will be $19,000.

COMMITTEE OUTCOME

The Community Services, Public Safety, Housing & Development Committee approved 2-0 on July 25, 2023 to approve the staff recommendation and to forward the item for Council approval.

Prepared by: Emilio Ramirez, Housing Director

ATTACHMENTS

1. Agreement A-8532
2. Agreement A-8533

CAPITAL IMPROVEMENT CONTRACT

Contract No: **A-8532**
Name of Contractor: MDJ Management
Address: 531 Main Street, #611, El Segundo, CA 90245

Project description: Fashion Park Apartments ADA Conversion

This Capital Improvement Contract (**"Contract")** is made at Oxnard, California, as of this 19th day of September 2023 between the City of Oxnard Housing Authority, called herein the **"Authority"**, and the above-named contractor (**"Contractor"**) for the construction of the capital improvement project described herein. The parties hereto agree as follows:

I. Type of Contract

This contract is a firm-fixed price contract as defined by 2CFR Part 200 and the Department of Housing and Urban Development (HUD) Handbook 7460.8, Rev. 2.

2. Contract Price

Contractor shall perform the scope of work per the detailed scope of work per approved plans submitted for the ADA unit conversion at 234, 251 and 257 Fashion Park. Authority shall pay Contractor, as described in **Exhibit A**, attached hereto and incorporated herein by this reference, in full payment for said work, the following sum: **$1,832,249.88.**

The above sum includes all taxes and the costs of any required bonds.

3. Payment Schedule

Authority shall pay Contractor no later than 30 calendar days after Authority accepts Contractor's invoices and Authority shall make final payment no later than 60 calendar days after Authority has issued and approved a certificate of completion for the work contemplated herein, provided that the Authority may withhold from progress payments an amount equal to 5 percent of the progress payment and may withhold from final payment an amount sufficient to protect the Authority from disputes equivalent to 150 percent of the value of any disputed amount of work.

4. Scope of Work

Contractor shall furnish all tools, equipment, apparatus, facilities, labor and materials necessary to, and shall perform and complete in a good, safe and workmanlike manner, the work described in the approved plans.

5. Contract Documents

The complete Contract consists of all the following, which are specifically incorporated herein by reference:

a. Change Orders
b. Contract Amendments –
c. This Contract
d. Amendments to HUD Form 5370
e. HUD Form 5370 General Conditions for Construction Contracts – Public Housing Programs
f. Specifications
g. Plans
h. Permits
i. Contractor's bid proposal and list of subcontractors (if applicable).
j. Performance and payment bonds as required by the specifications and applicable law. Unless otherwise specified, each such bond shall be 100 percent of the Contract price.
k. Insurance as required by the specifications and applicable law.
l. All applicable wage determinations, safety and health regulations, non-discrimination provisions, labor standards, and requirements if the Contract is federally assisted. This includes but is not limited to such items enumerated in the specifications and addenda thereto.

6. Indemnity

Contractor agrees to indemnify, hold harmless and defend Authority, its Commission, and each member thereof, and every officer, employee, representative or agent of Authority, from any and all liability, claims, demands, actions, damages (whether in contract or tort, including personal injury, death at any time, or property damage), costs and financial loss, including all costs and expenses and fees of litigation or arbitration, that arise directly or indirectly form any acts or omissions related to this Agreement performed by Contractor or its agents, employees, Subcontractors, Contractors, and other persons acting on Contractor's behalf. This agreement to indemnify, hold harmless and defend shall apply whether such acts or omissions are the product of active negligence, passive negligence, willfulness or acts for which Contractor or its agents, employees, subcontractors, consultants and other persons acting on Contractor's behalf would be held strictly liable.

7. Time for Performance

The time limit for the completion of the work is **540 working days** after receipt of the Notice to Proceed.

Contractor shall not perform any work until the Authority issues a Notice to Proceed. Work will be completed within the time limit specified above and in the Notice to Proceed.

8. Acknowledgement

Contractor by signing hereunder acknowledges that he has reviewed all the foregoing documents and agrees with the requirements, conditions and covenants contained therein.

The parties agree that this Agreement may be transmitted and signed by electronic or digital means by either/any or both/all Parties and that such signatures shall have the same force and effect as original signatures, in accordance with California Government Code Section 16.5 and California Civil Code Section 1633.7.

CITY OF OXNARD
HOUSING AUTHORITY

_____
John C. Zaragoza
Chairman

MDJ MANAGEMENT

_____
Matthew McMillon
President

APPROVED AS TO FORM:

_____
Stephen M. Fischer,
Housing General Counsel

APPROVED AS TO INSURANCE:

_____
Rhonda Hodge
Housing Finance Officer

APPROVED AS TO COMPLIANCE:

_____
Rhonda Hodge
Contract Administrator

GENERAL CONDITIONS

Work Hours:

From 8:00 AM to 5:00 PM max. Including 1-hour lunch.
No work is allowed Saturdays, Sundays and during any official holidays.

Safety and Security:
The contractors are required to secure the work area during the work hours, lunch hours, weekends, and holidays. The contractors shall secure and render safe the entire construction area at the end of each working day. Work areas must be well barricaded and flagged, and all precautions should be taken to avoid injury or damage to any person or property and shall protect and indemnify the Housing against any claim or liability arising from or based on the lack of proper safeguards or negligence whether by it or its agents, employees or Subcontractors.

Compliance with all Laws:
The contractors shall comply with all applicable federal, State and local laws, ordinances, codes and regulations in force at the time the contractors perform pursuant to the contract documents.

Project Schedule:
The contractor is expected to complete the job in not to exceed five hundred forty **(540) working days**.

Construction Debris:
Due to the nature of the job, the contractor is responsible for hauling away debris.

Storage Bin
The contractor shall provide bins and/or containers for temporary storage.

Warranty:
The contractor shall warranty the work for a period of **One (1) year** against workmanship.

Final Walkthrough, and Sign off:
The contractor is required to call for a final walk through with the project manager and/ or the Housing Authority staff after completion of the project. Upon approval, the contractor may bill the Housing Authority for said work. All the payments will be pending obtaining a final sign off from the City inspector and turning in those permits.

EXHIBIT A

GORDIAN®

Work Order Signature Document

EZIQC Contract No.: CA-R7-GB06-123021-MDJ

[X] **New Work Order** [ ] **Modify an Existing Work Order**

Work Order Number.:	116755.00	Work Order Date:	06/06/2023
Work Order Title:	Fashion Park Unit 234 Conversion		
Owner Name:	Oxnard Housing Authority	Contractor Name:	MDJ Management
Contact:	Fredi Contreras	Contact:	Matt McMillon
Phone:	805-890-8319	Phone:	310-490-1521

Work to be Performed

Work to be performed as per the Final Detailed Scope of Work Attached and as per the terms and conditions of Sourcewell EZIQC Contract No CA-R7-GB06-123021-MDJ.

Brief Work Order Description:

Time of Performance Estimated Start Date:

Estimated Completion Date:

Liquidated Damages Will apply: [ ] Will not apply: [X]

Work Order Firm Fixed Price: $610,749.96

Owner Purchase Order Number:

Approvals

Oxnard Housing Authority Date

MDJ Management Date

Detailed Scope of Work

To: Matt McMillon
MDJ Management
531 Main St #611
El Segundo, CA 90245
310-490-1521

From: Fredi Contreras
Oxnard Housing Authority
300 N. Marquita Street
Oxnard, CA 93030
805-890-8319

Date Printed: June 06, 2023

Work Order Number: 116755.00

Work Order Title: Fashion Park Unit 234 Conversion

Brief Scope:

☐ **Preliminary** ☐ **Revised** ☒ **Final**

The following items detail the scope of work as discussed at the site. All requirements necessary to accomplish the items set forth below shall be considered part of this scope of work.

See attached

Subject to the terms and conditions of ezIQC Contract **CA-R7-GB06-123021-MDJ**.

MDJ Management _____ Date _____

Oxnard Housing Authority _____ Date _____

MDJ Management, LLC
License # 1044711
DIR # 1000061313
531 Main St. #611 El Segundo CA 90245
310-490-1521

Job Name: 234 Fashion Park ADA Conversion
Location: 234 Fashion Park Oxnard, CA 93036
Customer: Oxnard Housing Authority

Submission Date: 5/31/23

Detailed Scope of Work

Demolition

- Demolition of existing apartment per plans
- Per Asbestos Survey report provided by client all walls, ceilings and floors to be considered ACM
    - Demolition of unit to be performed by certified hazardous material demolition company

Installation/Buildout

- Saw cutting of slab and demolition of concrete for new plumbing
- Excavation for new plumbing and new concrete footings for addition
- All framing throughout including new walls and soffits
- New rough and finish plumbing throughout
- New electrical rough including new panel per plan
- Concrete work:
    - Pour new footings for addition
    - Pour back all open trenches inside the unit
    - Pour slab for addition
    - Our sidewalk as required
- New windows and doors
- New Insulation
- HVAC ductwork, registers, and wall heaters.
    - Includes new forced air unit
- Drywall throughout
- Lath, stucco, and color coat to match existing
- Roofing, fascia, and gutters for new addition
- Interior paint
- New Flooring and base
- New kitchens, countertops, fixtures, sinks and appliances.

- New bathroom fixtures per plan
- Paint exterior of building
- Site work:
    - New sidewalks
    - Handicap ramp with truncated domes
    - Handicap striping
    - New signage at Handicap stall

Installation/Buildout added by Client NOT included on plans

- Remove and replace all outlets and switches throughout, even on all existing walls
- Remove and replace exterior lighting with LED lighting
    - Match existing 3 fixtures
- Install MDF baseboards
    - Instead of called out cove base
- Remove and replace all interior doors. Complete list of doors from plans as well as clients request:
    - Demo of 3 utility closet, 2 sliding closet, 5 bedroom, and 2 bathroom doors
    - Installation of 2 utility closet, 3 sliding closet, 3 bedroom, 2 bathroom doors, and 1 front door
- Clean up existing back yard, the weeds are 5 feet high
    - Includes weed weed whacking and removal of all dead weeds
- Remove and replace one section of vinyl fence because it is not wide enough for ADA width along concrete path to front door
    - 45 feet x 6 feet high
    - (1) One 4' Gate
    - Includes widening the concrete by one foot

Notes:

- All work to be performed per plans provided to MDJ
- Any additional add on items will be at the request of Customer. Any adjustment shall be an additional cost.
- Price includes all labor (**Normal Working Hours - Davis Bacon Wages**), materials, equipment to complete this scope of work.
- Construction Exclusions:
    - New Washer and Dryer not included in contract.

CLARIFICATIONS AND EXCLUSIONS:

- Warranty
    - One year warranty against workmanship
    - Manufacturer's warranty varies
- We exclude plans, permits, permit fees, related fees, testing, inspection, survey, and engineering unless specified above
- We exclude utilities and hazardous or contaminated material.
- Construction water, power, and sanitary facilities available on site for MDJ's use at no cost.
- We exclude premium time.
- We exclude anything not specifically mentioned above.
- MDJ reserves the right to review, change, and/or delete any provisions of any prime contract or subcontract, which results from this quotation.

- All terms to be net 30 days in full upon receipt of invoice. Interest will be charged at the rate of 2% monthly on the unpaid balance.

BID PRICE: See Price Proposal

All work to be completed in a substantial and workmanlike manner according to standard practices for the sum of **See Price Proposal.** Any additional add on items will be at the request of Customer. Any adjustment shall be an additional cost.

Bid price is good for thirty (30) days only.

Any controversy or claim based on, arising out of, or relating to this agreement, or breach thereof, including any claim based on the work performed pursuant to this agreement, shall be submitted to the American Arbitration Association for binding arbitration in accordance with its rules. If any arbitration, legal action is brought to enforce this agreement, or arising out of or relating to the agreement, the prevailing party shall be entitled to recover from the non-prevailing party reasonable attorney fees and costs incurred, in addition to any and all other relief to which that party may be entitled.

Submitted by:

Matthew McMillon
President MDJ
310.490.1521
matt@buildwithmdj.com

Contractor's Price Proposal - Summary

Date: June 06, 2023

Re:

IQC Master Contract #:	CA-R7-GB06-123021-MDJ
Work Order #:	116755.00
Owner PO #:	
Title:	Fashion Park Unit 234 Conversion
Contractor:	MDJ Management
Proposal Value:	$610,749.96

Section - 01	**$27,922.15**
Section - 02	**$124,779.67**
Section - 03	**$44,628.54**
Section - 06	**$30,807.26**
Section - 07	**$39,946.76**
Section - 08	**$16,937.65**
Section - 09	**$136,489.60**
Section - 10	**$1,650.96**
Section - 11	**$6,131.21**
Section - 12	**$7,227.87**
Section - 22	**$61,651.38**
Section - 23	**$30,704.85**
Section - 26	**$57,035.70**
Section - 31	**$17,571.02**
Section - 32	**$7,265.34**
Proposal Total	**$610,749.96**

Thisl total represents the correct total for the proposal. Any discrepancy between line totals, sub-totals and the proposal total is due to rounding.

The Percentage of NPP on this Proposal: %

Contractor's Price Proposal - Detail

Date: June 06, 2023

Re:

IQC Master Contract #:	CA-R7-GB06-123021-MDJ
Work Order #:	116755.00
Owner PO #:	
Title:	Fashion Park Unit 234 Conversion
Contractor:	MDJ Management
Proposal Value:	$610,749.96

	Sect.	Item	Mod.	UOM	Description	Line Total
Labor	Equip.	Material	(Excludes)			

Section - 01

1	01 22 16	00 0002		EA	Reimbursable FeesReimbursable Fees will be paid to the contractor for eligible costs as directed by Owner. Insert the appropriate quantity to adjust the base cost to the actual Reimbursable Fee. If there are multiple Reimbursable Fees, list each one separately and add a comment in the "note" block to identify the Reimbursable Fee (e.g. sidewalk closure, road cut, various permits, extended warranty, expedited shipping costs, etc.). A copy of each receipt shall be submitted with the Price Proposal.	$13,147.20

	Quantity		Unit Price		Factor	=	Total
Installation	11,952.00	x	1.00	x	1.1000	=	13,147.20

Bond = $597,602 x 2%

2	01 74 19	00 0016		EA	40 CY Dumpster (5 Ton) "Construction Debris"Includes delivery of dumpster, rental cost, pick-up cost, hauling, and disposal fee. Non-hazardous material.	$11,002.63

	Quantity		Unit Price		Factor	=	Total
Installation	12.00	x	809.97	x	1.1320	=	11,002.63

10 dumpsters for abatement debris: cabinets, drywall from entire house, shower, toilet, stucco, insulation, ...
2 dumpsters for construction debris: drywall cuts, lumber cuts, basic trash

3	01 74 19	00 0019		EA	15 CY Low-Boy Dumpster Mixed RecyclableFor mixed dirt, rock, concrete brick or asphalt with no trash or organics. Includes service to deliver and pick-up dumpster, hauling, rental and disposal fee.	$3,772.32

	Quantity		Unit Price		Factor	=	Total
Installation	4.00	x	833.11	x	1.1320	=	3,772.32

for removal of excavated soil for footings, slab, trenching

Subtotal for Section - 01 **$27,922.15**

Section - 02

4	02 41 19	13 0063		LF	Rod Reinforced Concrete Slab Up To 4" Depth, Saw Cut	$2,499.46

	Quantity		Unit Price		Factor	=	Total
Installation	400.00	x	5.52	x	1.1320	=	2,499.46

sawcut existing slab to trench for new electrical and plumbing runs as needed per plans

5	02 82 33	00 0067		SF	>2,500 To 10,000 SF, Single Layer Gypsum Wall Board, Asbestos Abatement And Disposal	$62,951.52

	Quantity		Unit Price		Factor	=	Total
Installation	6,684.00	x	8.32	x	1.1320	=	62,951.52

demolition throughout. All drywall mud is hot. ceilings and walls

6	02 82 33	00 0074		SF	>500 To 2,500 SF, Gypsum Wall Board (Or Backer Board) With Ceramic Tile And Mastic, Asbestos Abatement And Disposal	$12,439.55

	Quantity		Unit Price		Factor	=	Total
Installation	550.00	x	19.98	x	1.1320	=	12,439.55

demolition of bathrooms tile and backer board walls and floor as well as kitchen tile

7	02 82 33	00 0087		SF	>500 To 2,500 SF, Spray On Acoustical Ceiling, Asbestos Abatement And Disposal	$16,659.92

	Quantity		Unit Price		Factor	=	Total
Installation	1,564.00	x	9.41	x	1.1320	=	16,659.92

demolition

Contractor's Price Proposal - Detail Continues..

Work Order Number: 116755.00
Work Order Title: Fashion Park Unit 234 Conversion

Section - 02

8	02 82 33 00 0101		SF	>500 To 2,500 SF, Single Layer Or First Of Multiple Layers, Floor Tile, Asbestos Abatement And Disposal									$10,959.07
			Installation	Quantity 1,564.00	x	Unit Price 6.19	x	Factor 1.1320	=	Total 10,959.07			
			demolition of 2 layers of floor tile										
9	02 82 33 00 0101	0001		For Each Additional Layer, Add									$2,744.19
			Installation	Quantity 1,564.00	x	Unit Price 1.55	x	Factor 1.1320	=	Total 2,744.19			
10	02 82 33 00 0245		CF	>100 To 250 CF, Asbestos Contaminated Debris, Asbestos Abatement And Disposal									$13,881.15
			Installation	Quantity 250.00	x	Unit Price 49.05	x	Factor 1.1320	=	Total 13,881.15			
			demolition of all cabinets and vanities per plans. They are attached to the walls so removal would disturb drywall material that is hot. This is for kitchen and bathroom										
11	02 82 33 00 0333		SF	High Efficiency Particulate Air (HEPA) Vacuum And Cleaning Of Contaminated Area									$1,186.20
			Installation	Quantity 1,564.00	x	Unit Price 0.67	x	Factor 1.1320	=	Total 1,186.20			
			demolition part of abatement procedures										
12	02 89 00 00 0021		EA	3 Stage Portable Personnel Decontamination Wash FacilityIncludes connection to negative air system.									$907.07
			Installation	Quantity 1.00	x	Unit Price 801.30	x	Factor 1.1320	=	Total 907.07			
			demolition part of abatement procedures										
13	02 89 00 00 0023		EA	Portable Waste Decontamination UnitIncludes connection to negative air system.									$551.54
			Installation	Quantity 1.00	x	Unit Price 487.23	x	Factor 1.1320	=	Total 551.54			
			demolition										

Subtotal for Section - 02 **$124,779.67**

Section - 03

14	03 11 13 00 0003		SF	Continuous Footings Foundation Wood Formwork									$1,882.74
			Installation	Quantity 240.00	x	Unit Price 6.93	x	Factor 1.1320	=	Total 1,882.74			
			footing for new addition										
15	03 11 13 00 0003	0001		For <1,000, Add									$350.47
			Installation	Quantity 240.00	x	Unit Price 1.29	x	Factor 1.1320	=	Total 350.47			
16	03 11 13 00 0009		LF	Up To 6" High Slab Edge and Block-Out Wood Formwork									$699.89
			Installation	Quantity 116.00	x	Unit Price 5.33	x	Factor 1.1320	=	Total 699.89			
			for new addition										
17	03 11 13 00 0009	0004		For Up To 250, Add									$69.28
			Installation	Quantity 60.00	x	Unit Price 1.02	x	Factor 1.1320	=	Total 69.28			
18	03 21 11 00 0251		EA	Dowels Or Hairpin, 1/2" x 30" Length, Drilled And Epoxy In Concrete, 6" Embedment									$5,682.36
			Installation	Quantity 225.00	x	Unit Price 22.31	x	Factor 1.1320	=	Total 5,682.36			
			200 LF of trenching. Epoxy and Dowel every 2'. One on each side. For reinforcement and tying into existing slab adjacent. 25 dowels to attach from porch sidewalk to existing .										

Contractor's Price Proposal - Detail Continues..

Work Order Number: 116755.00
Work Order Title: Fashion Park Unit 234 Conversion

Section - 03

19	03 21 13 00 0093		LF	#6, Grade 50, Slab On Grade, Galvanized Steel Reinforcement Bar								$2,010.43
					Quantity		Unit Price		Factor		Total	
				Installation	800.00	x	2.22	x	1.1320	=	2,010.43	
				200 LF of trenching and 600 LF for slab, porch, and footings. Installation of rebar every 2'.								
20	03 30 53 00 0007		CF	Hand Mix And Place ConcreteFor use where conventional equipment access is limited or when directed by the owner.								$6,592.77
					Quantity		Unit Price		Factor		Total	
				Installation	200.00	x	29.12	x	1.1320	=	6,592.77	
				patch back trenching in existing slab								
21	03 31 13 00 0003		SF	4" 3,000 PSI Slab On Grade Concrete Slabs Assembly								$1,768.18
					Quantity		Unit Price		Factor		Total	
				Installation	200.00	x	7.81	x	1.1320	=	1,768.18	
				for new addition								
22	03 31 13 00 0003	0156		For Up To 500, Add								$681.46
					Quantity		Unit Price		Factor		Total	
				Installation	200.00	x	3.01	x	1.1320	=	681.46	
23	03 31 13 00 0023		CY	Concrete Pump, Place 3,000 PSI Concrete Spread FootingsExcludes pumping equipment.								$14,833.73
					Quantity		Unit Price		Factor		Total	
				Installation	50.00	x	262.08	x	1.1320	=	14,833.73	
				24 CY footing for new addition. 26 CY for Front porch/sloped walk								
24	03 31 13 00 0023	0040		For >20 To 50, Add								$638.45
					Quantity		Unit Price		Factor		Total	
				Installation	50.00	x	11.28	x	1.1320	=	638.45	
25	03 54 16 00 0005		SF	1/2" Thick Self Leveling Cementitious Underlayment For FloorsIncluding Surface Preparation								$9,418.78
					Quantity		Unit Price		Factor		Total	
				Installation	1,564.00	x	5.32	x	1.1320	=	9,418.78	
				self leveling of floors for prior to installation of new vinyl plank flooring								

Subtotal for Section - 03 **$44,628.54**

Section - 06

26	06 11 16 00 0061		SF	2" x 4" Wood Wall Framing At 16" On Center								$2,351.16
					Quantity		Unit Price		Factor		Total	
				Installation	950.00	x	1.58	x	1.1320	=	1,699.13	
				Demolition	800.00	x	0.72	x	1.1320	=	652.03	
				for new walls, new addition, and soffits. Couple walls require double stacked 2x4 staggered A-602								
27	06 11 16 00 0062		SF	2" x 6" Wood Wall Framing At 16" On Center								$616.94
					Quantity		Unit Price		Factor		Total	
				Installation	250.00	x	2.18	x	1.1320	=	616.94	
				2x6 wall per plans								
28	06 11 16 00 0062	0004		For >200 To 500, Add								$101.88
					Quantity		Unit Price		Factor		Total	
				Installation	250.00	x	0.36	x	1.1320	=	101.88	
29	06 11 16 00 0063		SF	2" x 8" Wood Wall Framing At 16" On Center								$263.53
					Quantity		Unit Price		Factor		Total	
				Installation	80.00	x	2.91	x	1.1320	=	263.53	
				2x8 wall per plans								

Contractor's Price Proposal - Detail Continues..

Work Order Number: 116755.00
Work Order Title: Fashion Park Unit 234 Conversion

Section - 06

30	06 11 16 00 0063	0003		For Up To 200, Add									$86.94
			Installation		Quantity 80.00	x	Unit Price 0.96	x	Factor 1.1320	=	Total 86.94		
31	06 11 16 00 0179		LF	2" x 4" Pressure Treated Lumber, For Roofing Nailers									$871.64
			Installation		Quantity 250.00	x	Unit Price 3.08	x	Factor 1.1320	=	Total 871.64		
			for roof framing										
32	06 11 16 00 0183		LF	2" x 4" Pressure Treated Lumber, For Roofing Sleepers									$464.12
			Installation		Quantity 250.00	x	Unit Price 1.64	x	Factor 1.1320	=	Total 464.12		
			for roof framing										
33	06 16 33 00 0006		SF	3/4" Thick CDX Plywood Roof DeckingApplied to wood rafters.									$690.52
			Installation		Quantity 250.00	x	Unit Price 2.44	x	Factor 1.1320	=	Total 690.52		
			for new addition roof										
34	06 16 33 00 0006	0040		For Tongue And Groove, Add									$19.81
			Installation		Quantity 250.00	x	Unit Price 0.07	x	Factor 1.1320	=	Total 19.81		
35	06 16 33 00 0012		SF	1/2" Interior BC Plywood Wall SheathingApplied to wall studs.									$1,036.91
			Installation		Quantity 400.00	x	Unit Price 2.29	x	Factor 1.1320	=	Total 1,036.91		
			for new addition per plans										
36	06 16 33 00 0012	0005		For Shear Wall Construction, Add									$135.84
			Installation		Quantity 400.00	x	Unit Price 0.30	x	Factor 1.1320	=	Total 135.84		
37	06 16 33 00 0012	0006		For Exterior CC Grade Plywood, Add									$54.34
			Installation		Quantity 400.00	x	Unit Price 0.12	x	Factor 1.1320	=	Total 54.34		
38	06 16 33 00 0020		SF	3/4" CD Grade Plywood Floor DeckingApplied to floor or joists.									$5,169.71
			Installation		Quantity 1,564.00	x	Unit Price 2.36	x	Factor 1.1320	=	Total 4,178.26		
			Demolition		1,564.00	x	0.56	x	1.1320	=	991.45		
			for new floor decking per plans FSI/A-602. plans require glue										
39	06 16 33 00 0020	0038		For Exterior Glue, Add									$1,593.40
			Installation		Quantity 15,640.00	x	Unit Price 0.09	x	Factor 1.1320	=	Total 1,593.40		
40	06 41 13 00 0225		EA	15" Wide, 35" High x 23-3/4" Deep, Single Drawer and Single Door, Solid Wood Face Frame, Thermofoil Door and Drawer Front, Base Cabinet									$736.43
			Installation		Quantity 2.00	x	Unit Price 325.28	x	Factor 1.1320	=	Total 736.43		
			demolition of 1 kitchen and installation of 2 new kitchen cabinets per plans										
41	06 41 13 00 0225	0126		For Solid Wood Drawers, Dovetail Joints And Full Extension Drawer Guides, Add									$231.72
			Installation		Quantity 2.00	x	Unit Price 102.35	x	Factor 1.1320	=	Total 231.72		
42	06 41 13 00 0225	0130		For All Plywood Box Construction, Add									$241.55
			Installation		Quantity 2.00	x	Unit Price 106.69	x	Factor 1.1320	=	Total 241.55		

Contractor's Price Proposal - Detail Continues..

Work Order Number: 116755.00
Work Order Title: Fashion Park Unit 234 Conversion

Section - 06

43	06 41 13 00 0226		EA	18" Wide, 35" High x 23-3/4" Deep, Single Drawer and Single Door, Solid Wood Face Frame, Thermofoil Door and Drawer Front, Base Cabinet									$770.08
			Installation	Quantity 2.00	x	Unit Price 340.14	x	Factor 1.1320	=	Total 770.08			
				demolition of 1 kitchen and installation of 2 new kitchen cabinets per plans									
44	06 41 13 00 0226	0126		For Solid Wood Drawers, Dovetail Joints And Full Extension Drawer Guides, Add									$231.72
			Installation	Quantity 2.00	x	Unit Price 102.35	x	Factor 1.1320	=	Total 231.72			
45	06 41 13 00 0226	0130		For All Plywood Box Construction, Add									$241.55
			Installation	Quantity 2.00	x	Unit Price 106.69	x	Factor 1.1320	=	Total 241.55			
46	06 41 13 00 0228		EA	24" Wide, 35" High x 23-3/4" Deep, Single Drawer and Single Door, Solid Wood Face Frame, Thermofoil Door and Drawer Front, Base Cabinet									$460.91
			Installation	Quantity 1.00	x	Unit Price 407.16	x	Factor 1.1320	=	Total 460.91			
				demolition of 1 kitchen and installation of 2 new kitchen cabinets per plans									
47	06 41 13 00 0228	0126		For Solid Wood Drawers, Dovetail Joints And Full Extension Drawer Guides, Add									$115.86
			Installation	Quantity 1.00	x	Unit Price 102.35	x	Factor 1.1320	=	Total 115.86			
48	06 41 13 00 0228	0130		For All Plywood Box Construction, Add									$120.77
			Installation	Quantity 1.00	x	Unit Price 106.69	x	Factor 1.1320	=	Total 120.77			
49	06 41 13 00 0231		EA	33" Wide, 35" High x 23-3/4" Deep, Single Drawer and Double Door, Solid Wood Face Frame, Thermofoil Door and Drawer Front, Base Cabinet									$1,098.81
			Installation	Quantity 2.00	x	Unit Price 485.34	x	Factor 1.1320	=	Total 1,098.81			
				demolition of 1 kitchen and installation of 2 new kitchen cabinets per plans									
50	06 41 13 00 0231	0126		For Solid Wood Drawers, Dovetail Joints And Full Extension Drawer Guides, Add									$231.72
			Installation	Quantity 2.00	x	Unit Price 102.35	x	Factor 1.1320	=	Total 231.72			
51	06 41 13 00 0231	0130		For All Plywood Box Construction, Add									$241.55
			Installation	Quantity 2.00	x	Unit Price 106.69	x	Factor 1.1320	=	Total 241.55			
52	06 41 13 00 0232		EA	36" Wide, 35" High x 23-3/4" Deep, Single Drawer and Double Door, Solid Wood Face Frame, Thermofoil Door and Drawer Front, Base Cabinet									$1,133.00
			Installation	Quantity 2.00	x	Unit Price 500.44	x	Factor 1.1320	=	Total 1,133.00			
				demolition of 1 kitchen and installation of 2 new kitchen cabinets per plans									
53	06 41 13 00 0232	0126		For Solid Wood Drawers, Dovetail Joints And Full Extension Drawer Guides, Add									$231.72
			Installation	Quantity 2.00	x	Unit Price 102.35	x	Factor 1.1320	=	Total 231.72			
54	06 41 13 00 0232	0130		For All Plywood Box Construction, Add									$241.55
			Installation	Quantity 2.00	x	Unit Price 106.69	x	Factor 1.1320	=	Total 241.55			
55	06 41 13 00 0248		EA	15" Wide, 35" High x 23-3/4" Deep, Four Drawer Base, Solid Wood Face Frame and Thermofoil Drawer Fronts, Base Cabinet									$881.74
			Installation	Quantity 2.00	x	Unit Price 389.46	x	Factor 1.1320	=	Total 881.74			
				demolition of 1 kitchen and installation of 2 new kitchen cabinets per plans									

Contractor's Price Proposal - Detail Continues..

Work Order Number: 116755.00
Work Order Title: Fashion Park Unit 234 Conversion

Section - 06

56	06 41 13 00 0248	0129		For Solid Wood Drawers, Dovetail Joints And Full Extension Drawer Guides, Add									$926.86
			Installation	Quantity		Unit Price		Factor		Total			
				2.00	x	409.39	x	1.1320	=	926.86			
57	06 41 13 00 0248	0130		For All Plywood Box Construction, Add									$241.55
			Installation	Quantity		Unit Price		Factor		Total			
				2.00	x	106.69	x	1.1320	=	241.55			
58	06 41 13 00 0258		EA	33" Wide, 12" High x 12" Deep, Double Door, Solid Wood Face Frame and Thermofoil Doors, Wall Cabinet									$331.44
			Installation	Quantity		Unit Price		Factor		Total			
				1.00	x	292.79	x	1.1320	=	331.44			
				demolition of 1 kitchen and installation of 2 new kitchen cabinets per plans									
59	06 41 13 00 0258	0131		For All Plywood Box Construction, Add									$64.81
			Installation	Quantity		Unit Price		Factor		Total			
				1.00	x	57.25	x	1.1320	=	64.81			
60	06 41 13 00 0259		EA	36" Wide, 12" High x 12" Deep, Double Door, Solid Wood Face Frame and Thermofoil Doors, Wall Cabinet									$365.34
			Installation	Quantity		Unit Price		Factor		Total			
				1.00	x	322.74	x	1.1320	=	365.34			
				demolition of 1 kitchen and installation of 2 new kitchen cabinets per plans									
61	06 41 13 00 0259	0131		For All Plywood Box Construction, Add									$64.81
			Installation	Quantity		Unit Price		Factor		Total			
				1.00	x	57.25	x	1.1320	=	64.81			
62	06 41 13 00 0278		EA	30" Wide, 18" High x 12" Deep, Double Doors, Solid Wood Face Frame and Thermofoil Doors, Wall Cabinet									$722.69
			Installation	Quantity		Unit Price		Factor		Total			
				2.00	x	319.21	x	1.1320	=	722.69			
				demolition of 1 kitchen and installation of 2 new kitchen cabinets per plans									
63	06 41 13 00 0278	0131		For All Plywood Box Construction, Add									$129.61
			Installation	Quantity		Unit Price		Factor		Total			
				2.00	x	57.25	x	1.1320	=	129.61			
64	06 41 13 00 0282		EA	12" Wide, 30" High x 12" Deep, Single Door, Solid Wood Face Frame and Thermofoil Door, Wall Cabinet									$597.90
			Installation	Quantity		Unit Price		Factor		Total			
				2.00	x	264.09	x	1.1320	=	597.90			
				demolition of 1 kitchen and installation of 2 new kitchen cabinets per plans									
65	06 41 13 00 0282	0131		For All Plywood Box Construction, Add									$129.61
			Installation	Quantity		Unit Price		Factor		Total			
				2.00	x	57.25	x	1.1320	=	129.61			
66	06 41 13 00 0283		EA	15" Wide, 30" High x 12" Deep, Single Door, Solid Wood Face Frame and Thermofoil Door, Wall Cabinet									$325.62
			Installation	Quantity		Unit Price		Factor		Total			
				1.00	x	287.65	x	1.1320	=	325.62			
				demolition of 1 kitchen and installation of 2 new kitchen cabinets per plans									
67	06 41 13 00 0283	0131		For All Plywood Box Construction, Add									$64.81
			Installation	Quantity		Unit Price		Factor		Total			
				1.00	x	57.25	x	1.1320	=	64.81			
68	06 41 13 00 0283		EA	15" Wide, 30" High x 12" Deep, Single Door, Solid Wood Face Frame and Thermofoil Door, Wall Cabinet									$325.62
			Installation	Quantity		Unit Price		Factor		Total			
				1.00	x	287.65	x	1.1320	=	325.62			
				demolition of 1 kitchen and installation of 2 new kitchen cabinets per plans									

Contractor's Price Proposal - Detail Continues..

Work Order Number: 116755.00
Work Order Title: Fashion Park Unit 234 Conversion

Section - 06

69	06 41 13 00 0283	0131		For All Plywood Box Construction, Add								$64.81
			Installation	Quantity 1.00	x	Unit Price 57.25	x	Factor 1.1320	=	Total 64.81		
70	06 41 13 00 0284		EA	18" Wide, 30" High x 12" Deep, Single Door, Solid Wood Face Frame and Thermofoil Door, Wall Cabinet								$694.28
			Installation	Quantity 2.00	x	Unit Price 306.66	x	Factor 1.1320	=	Total 694.28		
				demolition of 1 kitchen and installation of 2 new kitchen cabinets per plans								
71	06 41 13 00 0284	0131		For All Plywood Box Construction, Add								$129.61
			Installation	Quantity 2.00	x	Unit Price 57.25	x	Factor 1.1320	=	Total 129.61		
72	06 41 13 00 0289		EA	33" Wide, 30" High x 12" Deep, Double Doors, Solid Wood Face Frame and Thermofoil Doors, Wall Cabinet								$974.72
			Installation	Quantity 2.00	x	Unit Price 430.53	x	Factor 1.1320	=	Total 974.72		
				demolition of 1 kitchen and installation of 2 new kitchen cabinets per plans								
73	06 41 13 00 0289	0131		For All Plywood Box Construction, Add								$129.61
			Installation	Quantity 2.00	x	Unit Price 57.25	x	Factor 1.1320	=	Total 129.61		
74	06 41 13 00 0329		EA	36" Wide, 84" High x 24" Deep, Four Doors, Solid Wood Face Frame and Thermofoil Doors, Pantry Cabinet								$1,462.41
			Installation	Quantity 1.00	x	Unit Price 1,291.88	x	Factor 1.1320	=	Total 1,462.41		
				demolition of 1 kitchen and installation of 2 new kitchen cabinets per plans								
75	06 41 13 00 0329	0132		For All Plywood Box Construction, Add								$239.58
			Installation	Quantity 1.00	x	Unit Price 211.64	x	Factor 1.1320	=	Total 239.58		
76	06 41 93 00 0007		EA	7" To 8-1/2", Flat Cabinet Pull Handle								$2,154.15
			Installation	Quantity 54.00	x	Unit Price 35.24	x	Factor 1.1320	=	Total 2,154.15		
				demolition of 1 kitchen and installation of 2 new kitchen cabinets per plans								

Subtotal for Section - 06 **$30,807.26**

Section - 07

77	07 21 16 00 0006		SF	5-1/2" Thick, Kraft Faced, R-21 Fiberglass Flexible Insulation								$19,505.18
			Installation	Quantity 8,284.00	x	Unit Price 1.72	x	Factor 1.1320	=	Total 16,129.28		
			Demolition	8,284.00	x	0.36	x	1.1320	=	3,375.90		
				removal of existing insulation and installation of new 6684 sqft of walls 1564 sqft of ceilings								
78	07 26 13 00 0010		CSF	Building Wrap (Tyvek)								$5,304.13
			Installation	Quantity 87.50	x	Unit Price 53.55	x	Factor 1.1320	=	Total 5,304.13		
				for new addition								
79	07 31 13 13 0004		SQ	230 LB/SQ, 5" Exposure, Three Tab Fiberglass Reinforced, Asphalt Composition Shingle (CertainTeed XT 30)								$7,409.79
			Installation	Quantity 25.00	x	Unit Price 261.83	x	Factor 1.1320	=	Total 7,409.79		
				new shingle roof for addition								

Contractor's Price Proposal - Detail Continues..

Work Order Number: 116755.00
Work Order Title: Fashion Park Unit 234 Conversion

Section - 07

80	07 34 00 00 0003		SQ	30 LB, Asphalt Saturated Organic Felt Roofing Underlayment, Mechanically Fastened								$1,416.70
			Installation		Quantity 25.00	x	Unit Price 50.06	x	Factor 1.1320	=	Total 1,416.70	
			new shingle roof for addition									
81	07 41 13 00 0026		LF	Eave Flashing For Aluminum Exposed Fastener Metal Roofing								$784.25
			Installation		Quantity 40.00	x	Unit Price 17.32	x	Factor 1.1320	=	Total 784.25	
			for new addition									
82	07 41 13 00 0026	0130		For Fluoropolymer (Kynar®) Coating, Add								$42.11
			Installation		Quantity 40.00	x	Unit Price 0.93	x	Factor 1.1320	=	Total 42.11	
83	07 62 13 00 0033		SF	22 Gauge, 0.034" Thick, Galvanized Steel Flashing								$4,149.91
			Installation		Quantity 300.00	x	Unit Price 12.22	x	Factor 1.1320	=	Total 4,149.91	
			flashing per plans for addition and 100 sqft for new windows									
84	07 62 13 00 0033	0080		For Wrap Around Window Panning, Add								$699.58
			Installation		Quantity 100.00	x	Unit Price 6.18	x	Factor 1.1320	=	Total 699.58	
85	07 71 23 00 0016		LF	6", 0.032" Thick, Box Style Aluminum Gutter								$429.88
			Installation		Quantity 25.00	x	Unit Price 15.19	x	Factor 1.1320	=	Total 429.88	
			rain gutter per plans									
86	07 71 23 00 0016	0322		For Up To 100', Add								$70.18
			Installation		Quantity 25.00	x	Unit Price 2.48	x	Factor 1.1320	=	Total 70.18	
87	07 71 23 00 0029		EA	6", Box Style Aluminum Gutter End Cap								$18.34
			Installation		Quantity 2.00	x	Unit Price 8.10	x	Factor 1.1320	=	Total 18.34	
			rain gutter per plans									
88	07 71 23 00 0055		LF	4" x 5", 0.019" Thick, Rectangular Aluminum Downspout								$102.67
			Installation		Quantity 10.00	x	Unit Price 9.07	x	Factor 1.1320	=	Total 102.67	
			rain gutter per plans									
89	07 71 23 00 0055	0325		For Up To 100', Add								$14.04
			Installation		Quantity 10.00	x	Unit Price 1.24	x	Factor 1.1320	=	Total 14.04	

Subtotal for Section - 07 **$39,946.76**

Section - 08

90	08 05 13 00 0041		EA	Factory Prepare Wood Door (Rated Or Non-Rated) For Mortise Lockset Hardware								$470.41
			Installation		Quantity 6.00	x	Unit Price 69.26	x	Factor 1.1320	=	Total 470.41	
			for all new doors. 1 front door, 2 bath, and 3 bedroom									

Contractor's Price Proposal - Detail Continues..

Work Order Number: 116755.00
Work Order Title: Fashion Park Unit 234 Conversion

Section - 08

91	08 14 16 00 0134	EA	3'-0" x 6'-8" x 1-3/4" Thick, 5 Ply, Hollow Core (HC), Birch Faced Wood Door									$2,910.85
				Quantity		Unit Price		Factor		Total		
			Installation	7.00	x	288.16	x	1.1320	=	2,283.38		
			Demolition	10.00	x	55.43	x	1.1320	=	627.47		
			Demo of 3 utility closet, 5 bedroom, and 2 bathroom doors. Installation of 2 utility closet, 3 bedroom, 2 bathroom doors.									
92	08 14 73 00 0074	EA	5' Wide, Two 2'-6" x 6'-8" x 1-3/8" Thick, Flush, Hollow Core (HC), Birch Faced Wood Bi-Pass Doors									$1,525.71
				Quantity		Unit Price		Factor		Total		
			Installation	3.00	x	396.94	x	1.1320	=	1,348.01		
			Demolition	2.00	x	78.49	x	1.1320	=	177.70		
			removal of 2 existing closet sliding doors, installation of 3 new closet sliding doors									
93	08 53 13 00 0549	EA	>110" To 120" UI, Horizontal Sliding Premium Vinyl Window (Pella 350)									$4,060.21
				Quantity		Unit Price		Factor		Total		
			Installation	5.00	x	631.42	x	1.1320	=	3,573.84		
			Demolition	6.00	x	71.61	x	1.1320	=	486.38		
			removal of 6 existing windows. Installation of 5 new windows per plans									
94	08 71 11 00 0004	PR	3-1/2" x 3-1/2" Standard Duty, Full Mortise, Plain Bearing, Brass/Bronze, Satin Chrome Finish Hinge									$652.61
				Quantity		Unit Price		Factor		Total		
			Installation	7.00	x	73.13	x	1.1320	=	579.48		
			Demolition	10.00	x	6.46	x	1.1320	=	73.13		
			Demo of 3 utility closet, 5 bedroom, and 2 bathroom doors. Installation of 2 utility closet, 3 bedroom, 2 bathroom doors.									
95	08 71 11 00 0005	PR	4" x 4" Standard Duty, Full Mortise, Plain Bearing, Brass/Bronze, Satin Chrome Finish Hinge									$136.35
				Quantity		Unit Price		Factor		Total		
			Installation	1.50	x	80.30	x	1.1320	=	136.35		
			for new front door per plans									
96	08 71 11 00 0513	EA	3" Projection, Residential Spring Type, Bright Brass Finish, Steel Wall Stop (Ives 63)									$130.43
				Quantity		Unit Price		Factor		Total		
			Installation	7.00	x	9.86	x	1.1320	=	78.13		
			Demolition	10.00	x	4.62	x	1.1320	=	52.30		
			per plans									
97	08 71 11 00 0655	EA	190 Degree Angle Of View, Bright Brass Finish, Brass One-Way Wide Angle Door Viewer (Ives U698)									$47.59
				Quantity		Unit Price		Factor		Total		
			Installation	1.00	x	42.04	x	1.1320	=	47.59		
			for new front door per plans									
98	08 71 11 00 2288	EA	Passage/Closet F01 Mortise LatchsetBoth sides always unlocked.									$1,471.62
				Quantity		Unit Price		Factor		Total		
			Installation	2.00	x	615.36	x	1.1320	=	1,393.18		
			Demolition	3.00	x	23.10	x	1.1320	=	78.45		
			Demo of 3 utility closet. Installation of 2 utility closet doors									
99	08 71 11 00 2289	EA	Bath/Bedroom Privacy F02/F19 Mortise LocksetLocked with thumb knob inside.									$4,323.67
				Quantity		Unit Price		Factor		Total		
			Installation	5.00	x	731.56	x	1.1320	=	4,140.63		
			Demolition	7.00	x	23.10	x	1.1320	=	183.04		
			Demo of 5 bedroom, and 2 bathroom doors. Installation of 3 bedroom, 2 bathroom doors.									

Contractor's Price Proposal - Detail Continues..

Work Order Number: 116755.00
Work Order Title: Fashion Park Unit 234 Conversion

Section - 08

100	08 71 11 00 2293		EA	Entrance F08 Mortise LocksetLocked with key outside and thumb knob inside.								$960.13
					Quantity		Unit Price		Factor		Total	
				Installation	1.00	x	848.17	x	1.1320	=	960.13	
				for new front door per plans								
101	08 71 11 00 2293	0263		For Satin Brass Clear Coat US4 (BHMA 606) Finish, Add								$42.78
					Quantity		Unit Price		Factor		Total	
				Installation	1.00	x	37.79	x	1.1320	=	42.78	
102	08 72 33 00 0155		LF	3/8" x 3/16", Silicon Compression Bulb, Adhesive Backed Perimeter Gasketing Weather-Strip (Pemko PK33)								$63.89
					Quantity		Unit Price		Factor		Total	
				Installation	17.00	x	3.32	x	1.1320	=	63.89	
				for new front door per plans								
103	08 72 43 00 0011		LF	6" Width, 1/4" Height, Aluminum Saddle Threshold (Pemko 272A)								$125.07
					Quantity		Unit Price		Factor		Total	
				Installation	3.00	x	36.83	x	1.1320	=	125.07	
				for new front door per plans								
104	08 72 43 00 0011	0458		For Color Anodized Finish, Add								$16.33
					Quantity		Unit Price		Factor		Total	
				Installation	3.00	x	4.81	x	1.1320	=	16.33	

Subtotal for Section - 08 **$16,937.65**

Section - 09

105	09 05 71 00 0002		SF	5 Mil Tile And Stone Acoustical Underlayment (EasyMat)								$6,391.32
					Quantity		Unit Price		Factor		Total	
				Installation	1,564.00	x	3.61	x	1.1320	=	6,391.32	
				acousthmat underlayment per plans FSI/A-602								
106	09 05 71 00 0005		SF	2 MM Thick Resilient Plank Floor Acoustical Underlayment (Floormuffler)								$2,637.97
					Quantity		Unit Price		Factor		Total	
				Installation	1,564.00	x	1.49	x	1.1320	=	2,637.97	
				closest LI to gypsum sanded floor underlayment per plans FSI/A-602								
107	09 22 13 23 0008		SF	25 Gauge, 16" On Center, Installed On Walls, Double-Leg Resilient Channel, RC2 Furring Channel								$2,604.73
					Quantity		Unit Price		Factor		Total	
				Installation	650.00	x	3.54	x	1.1320	=	2,604.73	
				Resilient channel per plans A-602								
108	09 22 13 23 0010		SF	25 Gauge, 16" On Center, Installed On Ceilings, Double-Leg Resilient Channel, RC2 Furring Channel								$7,418.18
					Quantity		Unit Price		Factor		Total	
				Installation	1,564.00	x	4.19	x	1.1320	=	7,418.18	
				Resilient channel per plans FSI/A-602								
109	09 22 36 23 0005		SF	3.4 LB/SY, Installed On Studs Or Furred Walls, Flat Diamond, Expanded Metal Lath								$3,022.16
					Quantity		Unit Price		Factor		Total	
				Installation	875.00	x	2.53	x	1.1320	=	2,505.97	
				Demolition	800.00	x	0.57	x	1.1320	=	516.19	
				removal of existing stucco and installation of new for new addition and new front entrance								

Work Order Number: 116755.00
Work Order Title: Fashion Park Unit 234 Conversion

Section - 09

110	09 24 23 00 0002		SF	Scratch/Brown/Finish, Three Coat Troweled StuccoExcludes lath and felt. Interior or exterior, one side.								$10,885.03
					Quantity		Unit Price		Factor		Total	
			Installation		875.00	x	8.53	x	1.1320	=	8,448.97	
			Demolition		800.00	x	2.69	x	1.1320	=	2,436.06	
			removal of existing stucco and installation of new for new addition and new front entrance									
111	09 24 23 00 0004		SF	Scratch/Finish, Two Coat Troweled StuccoExcludes lath and felt. Interior or exterior, one side.								$6,763.70
					Quantity		Unit Price		Factor		Total	
			Installation		875.00	x	5.64	x	1.1320	=	5,586.42	
			Demolition		800.00	x	1.30	x	1.1320	=	1,177.28	
			removal of existing stucco and installation of new for new addition and new front entrance									
112	09 24 23 00 0005		SF	Finish Coat Troweled StuccoExcludes lath and felt. Interior or exterior, one side.								$4,373.48
					Quantity		Unit Price		Factor		Total	
			Installation		875.00	x	3.62	x	1.1320	=	3,585.61	
			Demolition		800.00	x	0.87	x	1.1320	=	787.87	
			removal of existing stucco and installation of new for new addition and new front entrance									
113	09 29 10 00 0006		SF	5/8" Gypsum Board								$14,191.84
					Quantity		Unit Price		Factor		Total	
			Installation		8,248.00	x	1.52	x	1.1320	=	14,191.84	
			for walls and ceilings per plans									
114	09 29 10 00 0038		SF	Up To 10' High, Walls, Tape, Spackle And Finish Gypsum Board								$4,464.11
					Quantity		Unit Price		Factor		Total	
			Installation		6,684.00	x	0.59	x	1.1320	=	4,464.11	
			for walls									
115	09 29 10 00 0038	0048		For ASTM C840 Level 5 High Quality Finish, Add								$3,329.17
					Quantity		Unit Price		Factor		Total	
			Installation		6,684.00	x	0.44	x	1.1320	=	3,329.17	
116	09 29 10 00 0041		SF	Up To 10' High, Ceilings, Tape, Spackle And Finish Gypsum Board								$1,363.25
					Quantity		Unit Price		Factor		Total	
			Installation		1,564.00	x	0.77	x	1.1320	=	1,363.24	
			for ceilings									
117	09 29 10 00 0041	0048		For ASTM C840 Level 5 High Quality Finish, Add								$10,091.55
					Quantity		Unit Price		Factor		Total	
			Installation		15,640.00	x	0.57	x	1.1320	=	10,091.55	
118	09 29 10 00 0044		LF	Up To 10' High, Vertical Corners, Tape, Spackle And Finish Gypsum Board								$1,651.00
					Quantity		Unit Price		Factor		Total	
			Installation		1,236.00	x	1.18	x	1.1320	=	1,651.00	
			walls: 150 vertical corners @ 8' throughout both floors. windows: 36 LF of vertical corners									
119	09 29 10 00 0044	0048		For ASTM C840 Level 5 High Quality Finish, Add								$1,217.26
					Quantity		Unit Price		Factor		Total	
			Installation		1,236.00	x	0.87	x	1.1320	=	1,217.26	
120	09 29 10 00 0047		LF	Up To 10' High, Horizontal Corners, Tape, Spackle And Finish Gypsum Board								$1,209.66
					Quantity		Unit Price		Factor		Total	
			Installation		780.00	x	1.37	x	1.1320	=	1,209.66	
			750 LF of walls and 30 LF of windows									

Work Order Number: 116755.00
Work Order Title: Fashion Park Unit 234 Conversion

Section - 09

121	09 29 10 00 0047	0048		For ASTM C840 Level 5 High Quality Finish, Add								$891.79
			Installation	Quantity 780.00	x	Unit Price 1.01	x	Factor 1.1320	=	Total 891.79		
122	09 29 10 00 0051		LF	Corner Bead, Galvanized Steel For Gypsum Board								$7,508.15
			Installation	Quantity 2,016.00	x	Unit Price 3.29	x	Factor 1.1320	=	Total 7,508.15		
			walls: 150 vertical corners @ 8' throughout both floors. 750 LF of horizontal corners Windows: 86 LF									
123	09 65 13 13 0003		LF	4" High, 1/8" Thick, Type TV Thermoplastic Vinyl Wall Base, All Colors								$2,844.15
			Installation	Quantity 750.00	x	Unit Price 3.35	x	Factor 1.1320	=	Total 2,844.15		
			750 LF of walls									
124	09 65 23 00 0004		SF	0.16" Overall Thickness, 0.020" Wear Layer, Vinyl Plank Flooring (Armstrong® Luxe Plank™)								$16,907.78
			Installation	Quantity 1,564.00	x	Unit Price 9.55	x	Factor 1.1320	=	Total 16,907.78		
			new flooring throughout per plans									
125	09 91 13 00 0095		SF	1 Coat Primer, Brush/Roller Work, Paint Exterior Stucco Walls								$1,236.14
			Installation	Quantity 1,400.00	x	Unit Price 0.78	x	Factor 1.1320	=	Total 1,236.14		
			paint front and side of building for affected areas corner to corner									
126	09 91 13 00 0097		SF	2 Coats Paint, Brush/Roller Work, Paint Exterior Stucco Walls								$2,599.07
			Installation	Quantity 1,400.00	x	Unit Price 1.64	x	Factor 1.1320	=	Total 2,599.07		
			paint front and side of building for affected areas corner to corner									
127	09 91 23 00 0067		SF	1 Coat Primer, Brush/Roller Work, Paint Interior Plaster/Drywall Walls								$4,161.46
			Installation	Quantity 6,684.00	x	Unit Price 0.55	x	Factor 1.1320	=	Total 4,161.46		
			for walls									
128	09 91 23 00 0069		SF	2 Coats Paint, Brush/Roller Work, Paint Interior Plaster/Drywall Walls								$8,322.92
			Installation	Quantity 6,684.00	x	Unit Price 1.10	x	Factor 1.1320	=	Total 8,322.92		
			for walls									
129	09 91 23 00 0161		SF	1 Coat Primer, Brush/Roller Work, Paint Interior Drywall/Plaster Ceiling								$1,150.79
			Installation	Quantity 1,564.00	x	Unit Price 0.65	x	Factor 1.1320	=	Total 1,150.79		
			for ceilings									
130	09 91 23 00 0163		SF	2 Coats Paints, Brush/Roller Work, Paint Interior Drywall/Plaster Ceiling								$2,071.42
			Installation	Quantity 1,564.00	x	Unit Price 1.17	x	Factor 1.1320	=	Total 2,071.42		
			for ceilings									
131	09 91 23 00 0252		LF	1 Coat Primer, Brush/Roller Work, Paint Interior Wood Door Frame And Trim								$570.53
			Installation	Quantity 600.00	x	Unit Price 0.84	x	Factor 1.1320	=	Total 570.53		
			15 total doors. 40 LF of trim per door									
132	09 91 23 00 0254		LF	2 Coats Paint, Brush/Roller Work, Paint Interior Wood Door Frame And Trime								$1,249.73
			Installation	Quantity 600.00	x	Unit Price 1.84	x	Factor 1.1320	=	Total 1,249.73		
			15 total doors. 40 LF of trim per door									

Contractor's Price Proposal - Detail Continues..

Work Order Number: 116755.00
Work Order Title: Fashion Park Unit 234 Conversion

Section - 09

133	09 91 23 00 0275	EA	1 Coat Primer, Brush/Roller Work, Both Faces, Paint Interior Wood Door								$1,153.96
				Quantity		Unit Price		Factor		Total	
			Installation	15.00	x	67.96	x	1.1320	=	1,153.96	
			8 doors on first floor 7 doors on second floor								
134	09 91 23 00 0277	EA	2 Coats Paint, Brush/Roller Work, Both Faces, Paint Interior Wood Door								$2,072.58
				Quantity		Unit Price		Factor		Total	
			Installation	15.00	x	122.06	x	1.1320	=	2,072.58	
			8 doors on first floor 7 doors on second floor								
135	09 91 23 00 0307	LF	1 Coat Primer, Brush/Roller Work, Paint Interior Wood Window Frame And Trim								$163.73
				Quantity		Unit Price		Factor		Total	
			Installation	128.00	x	1.13	x	1.1320	=	163.73	
			8 windows with 128 LF of trim								
136	09 91 23 00 0309	LF	2 Coats Paint, Brush/Roller Work, Paint Interior Wood Window Frame And Trim								$357.89
				Quantity		Unit Price		Factor		Total	
			Installation	128.00	x	2.47	x	1.1320	=	357.89	
			8 windows with 128 LF of trim								
137	09 91 23 00 0350	LF	1 Coat Primer, Brush Work, Paint Interior Wood Trim To 6" Wide								$492.42
				Quantity		Unit Price		Factor		Total	
			Installation	750.00	x	0.58	x	1.1320	=	492.42	
			750 LF of baseboards								
138	09 91 23 00 0352	LF	2 Coats Paint, Paint Interior Wood Trim to 6" Wide								$1,120.68
				Quantity		Unit Price		Factor		Total	
			Installation	750.00	x	1.32	x	1.1320	=	1,120.68	
			750 LF of baseboards								

Subtotal for Section - 09 **$136,489.60**

Section - 10

139	10 28 13 13 0045	EA	Single Roll, Surface Mounted, Stainless Steel, Satin Finish, Toilet Tissue Dispenser (Bobrick B-6857)								$123.83
				Quantity		Unit Price		Factor		Total	
			Installation	1.00	x	88.61	x	1.1320	=	100.31	
			Demolition	1.00	x	20.78	x	1.1320	=	23.52	
			per plans								
140	10 28 13 13 0170	EA	36" Length, 1-1/2" Diameter, Stainless Steel Grab Bar (Bobrick B-6806x36)								$311.68
				Quantity		Unit Price		Factor		Total	
			Installation	3.00	x	91.78	x	1.1320	=	311.68	
			per plans								
141	10 28 13 13 0171	EA	42" Length, 1-1/2" Diameter, Stainless Steel Grab Bar (Bobrick B-6806x42)								$106.14
				Quantity		Unit Price		Factor		Total	
			Installation	1.00	x	93.76	x	1.1320	=	106.14	
			per plans								
142	10 28 13 13 0217	EA	Telescoping 60" To 72" Length, 20-Gauge, 1" Diameter, Stainless Steel Curved Shower Rod With Concealed Mounting (Kohler Expanse K-9349)								$158.19
				Quantity		Unit Price		Factor		Total	
			Installation	1.00	x	118.96	x	1.1320	=	134.66	
			Demolition	1.00	x	20.78	x	1.1320	=	23.52	
			per plans								

Contractor's Price Proposal - Detail Continues..

Work Order Number: 116755.00
Work Order Title: Fashion Park Unit 234 Conversion

Section - 10

143	10 28 13 13 0322	EA	24" Length, 3/4" Diameter, Stainless Steel Towel Bar (Bobrick B-674)									$133.36
				Quantity		Unit Price		Factor		Total		
			Installation	1.00	x	97.03	x	1.1320	=	109.84		
			Demolition	1.00	x	20.78	x	1.1320	=	23.52		
			per plans									
144	10 28 13 13 0390	EA	20" x 26", Surface Mounted, Aluminum Medicine Cabinet (Kohler K-CB)									$817.76
				Quantity		Unit Price		Factor		Total		
			Installation	1.00	x	676.23	x	1.1320	=	765.49		
			Demolition	1.00	x	46.17	x	1.1320	=	52.26		
			per plans									

Subtotal for Section - 10 **$1,650.96**

Section - 11

145	11 30 13 13 0010	EA	30" Gas Range With Oven									$2,325.17
				Quantity		Unit Price		Factor		Total		
			Installation	2.00	x	985.73	x	1.1320	=	2,231.69		
			Demolition	1.00	x	82.58	x	1.1320	=	93.48		
			remove and save existing for clients attic stock. Installation of 2 new.									
146	11 30 13 13 0015	EA	30" Venting Range Hood (Broan 40000)									$619.32
				Quantity		Unit Price		Factor		Total		
			Installation	2.00	x	242.58	x	1.1320	=	549.20		
			Demolition	1.00	x	61.94	x	1.1320	=	70.12		
			removal of existing and installation of 2 new									
147	11 30 13 13 0048	EA	>16 To 18 CF Top Freezer Refrigerator									$2,550.65
				Quantity		Unit Price		Factor		Total		
			Installation	2.00	x	1,105.96	x	1.1320	=	2,503.89		
			Demolition	1.00	x	41.30	x	1.1320	=	46.75		
			remove and save existing for clients attic stock. Installation of 2 new.									
148	11 30 13 13 0084	EA	1/3 HP Insulated Garbage Disposal (GE GFC320V)									$636.07
				Quantity		Unit Price		Factor		Total		
			Installation	2.00	x	249.98	x	1.1320	=	565.95		
			Demolition	1.00	x	61.94	x	1.1320	=	70.12		
			removal o existing and installation of new									

Subtotal for Section - 11 **$6,131.21**

Section - 12

149	12 36 61 19 0005	SF	1-1/4" Thick, Quartz Agglomerate Countertop With Backsplash									$6,914.26
				Quantity		Unit Price		Factor		Total		
			Installation	50.00	x	122.16	x	1.1320	=	6,914.26		
			25 LF of kitchen countertops									
150	12 36 61 19 0007	EA	Cutout For Sink And/Or Faucet In Quartz Agglomerate Countertop									$313.61
				Quantity		Unit Price		Factor		Total		
			Installation	2.00	x	138.52	x	1.1320	=	313.61		
			2 kitchen sinks									

Subtotal for Section - 12 **$7,227.87**

Section - 22

Work Order Number: 116755.00
Work Order Title: Fashion Park Unit 234 Conversion

Section - 22

151	22 01 40 81 0004	EA	Removal And Replacement Of Chrome Supply Lines To Sink/Lavatory, Pair								$297.60
				Quantity		Unit Price		Factor		Total	
			Installation	10.00	x	26.29	x	1.1320	=	297.60	
			replace supply lines in kitchens and bathrooms								
152	22 01 40 81 0006	EA	Removal And Replacement Of Double Bowl Sink/Lavatory Drain Line								$128.73
				Quantity		Unit Price		Factor		Total	
			Installation	2.00	x	56.86	x	1.1320	=	128.73	
			new drain lines								
153	22 11 16 00 0003	LF	3/4" Schedule 40 Threaded Galvanized Steel Pipe With 150 LB Malleable Iron Fitting AssemblyIncludes all hangers and all galvanized malleable iron fittings (couplings, elbows, tees and reducer fittings). All hangers are complete assemblies. Not for use where detail is available.								$7,127.07
				Quantity		Unit Price		Factor		Total	
			Installation	300.00	x	18.30	x	1.1320	=	6,214.68	
			Demolition	200.00	x	4.03	x	1.1320	=	912.39	
			gas line piping								
154	22 11 16 00 0901	LF	3/4" Inside Diameter Copper Pipe/Tubing Type L AssemblyIncludes all hangers and couplings, elbow, tee, reducer fittings. All hangers are complete assemblies. Not for use where detail is available.								$19,234.38
				Quantity		Unit Price		Factor		Total	
			Installation	650.00	x	24.17	x	1.1320	=	17,784.29	
			Demolition	350.00	x	3.66	x	1.1320	=	1,450.09	
			water line copper piping								
155	22 12 23 13 0002	EA	80 Gallon ASME Rated Tank, 150PSI, Jacketed, Insulated, Glass Lined Water Heater Storage Tank (TJ-80A)								$424.28
				Quantity		Unit Price		Factor		Total	
			Installation	0.00	x	2,141.02	x	1.1320	=	0.00	
			Demolition	1.00	x	374.81	x	1.1320	=	424.28	
			removal of existing water heater								
156	22 13 16 00 0509	LF	4" Schedule 40 Polyvinyl Chloride (PVC) DWV Pipe AssemblyIncludes all fittings, couplings and hangers. Fittings are assumed every 10'. Not for use where detail is available.								$20,147.62
				Quantity		Unit Price		Factor		Total	
			Installation	400.00	x	39.47	x	1.1320	=	17,872.02	
			Demolition	275.00	x	7.31	x	1.1320	=	2,275.60	
			Sewer and vent piping								
157	22 34 13 00 0011	EA	7.4 GPM, Outdoor Mount, Instantaneous, Tankless, Gas Domestic Water Heater (Rheem RTG-74XN)								$5,196.24
				Quantity		Unit Price		Factor		Total	
			Installation	2.00	x	2,295.16	x	1.1320	=	5,196.24	
			installation of 2 new water heaters								
158	22 41 16 16 0003	EA	33" x 21" x 6-1/2" Stainless Steel Kitchen Sink, Double Bowl, 20 Gauge (Elkay D233213)								$1,488.27
				Quantity		Unit Price		Factor		Total	
			Installation	2.00	x	607.23	x	1.1320	=	1,374.77	
			Demolition	1.00	x	100.27	x	1.1320	=	113.51	
			removal of existing and installation of new.								
159	22 41 39 00 0006	EA	Chrome Two Handle Kitchen Faucet With Spray, Three Hole Installation, 8" Center (Delta 2402LF-LHP+H215)								$454.33
				Quantity		Unit Price		Factor		Total	
			Installation	2.00	x	177.25	x	1.1320	=	401.29	
			Demolition	1.00	x	46.85	x	1.1320	=	53.03	
			removal of existing and installation of new.								

Contractor's Price Proposal - Detail Continues..

Work Order Number: 116755.00
Work Order Title: Fashion Park Unit 234 Conversion

Section - 22

160	22 42 13 13 0027	EA	2 Piece Tank Type, Pressure Assisted, Siphon Jet, Floor Mounted, Back Outlet, Handicap Accessible, Elongated Vitreous China Water Closet (American Standard Yorkville™ ADA)								$1,300.36
				Quantity		Unit Price		Factor		Total	
			Installation	1.00	x	1,051.28	x	1.1320	=	1,190.05	
			Demolition	1.00	x	97.45	x	1.1320	=	110.31	
			remove existing and install new ADA toilet								
161	22 42 16 13 0009	EA	27" x 20" Wheelchair Accessible, Vitreous China Wall Hung Lavatory (American Standard Wheel Chair Users)								$776.98
				Quantity		Unit Price		Factor		Total	
			Installation	1.00	x	623.60	x	1.1320	=	705.92	
			Demolition	1.00	x	62.78	x	1.1320	=	71.07	
			remove existing and install new ADA sink, faucet, and drain cover.								
162	22 42 19 00 0027	EA	3 Piece Tub/Shower Surrounds, 32" x 72" Side Walls, 48" x 72" Back, (Swanstone SK-324872)								$3,166.32
				Quantity		Unit Price		Factor		Total	
			Installation	1.00	x	2,797.10	x	1.1320	=	3,166.32	
			new tub/shower for ADA bathroom								
163	22 42 39 00 0042	EA	Single Supply EcoPower® Faucet, Polished Chrome Finish (Toto TEL3LS10#CP)								$709.36
				Quantity		Unit Price		Factor		Total	
			Installation	1.00	x	626.64	x	1.1320	=	709.36	
			ADA sink, faucet, and drain cover.								
164	22 42 39 00 0064	EA	Three Lever Handle, Chrome Shower And Tub Filler (American Standard Colony Soft 3375.502)								$293.63
				Quantity		Unit Price		Factor		Total	
			Installation	1.00	x	218.72	x	1.1320	=	247.59	
			Demolition	1.00	x	40.67	x	1.1320	=	46.04	
			per plans								
165	22 42 39 00 0210	EA	Lavatory Protective Enclosure (IPS Truebro Lav Shield)								$350.49
				Quantity		Unit Price		Factor		Total	
			Installation	2.00	x	154.81	x	1.1320	=	350.49	
			drain cover for ADA kitchen and bathroom sink								
166	22 42 39 00 0217	EA	1/2" NPT x 3/8" Compression Chrome, Quarter Turn Dual Angle Stop (SharkBite 25558)								$555.72
				Quantity		Unit Price		Factor		Total	
			Installation	10.00	x	41.22	x	1.1320	=	466.61	
			Demolition	8.00	x	9.84	x	1.1320	=	89.11	
			new angle stops installed in bathrooms and kitchens								

Subtotal for Section - 22 **$61,651.38**

Section - 23

167	23 05 93 00 0017	EA	Balancing HVAC Duct System, Floor Height Supply, Return, Exhaust, Register And Diffuser								$61.88
				Quantity		Unit Price		Factor		Total	
			Installation	1.00	x	54.66	x	1.1320	=	61.88	
			required setup, balancing, and charging for new system								
168	23 09 23 53 0284	EA	Scheduling Program, HVAC (AHU, RTU, AC Units, Etcetera) Programming Measures								$3,880.60
				Quantity		Unit Price		Factor		Total	
			Installation	1.00	x	3,428.09	x	1.1320	=	3,880.60	
			required setup, balancing, and charging for new system								

Contractor's Price Proposal - Detail Continues..

Work Order Number: 116755.00
Work Order Title: Fashion Park Unit 234 Conversion

Section - 23

169	23 31 13 16 0063	EA	4" Diameter, 26 Gauge, 2" WG And Less (Class C), Galvanized Sheet Metal Round And Flat-Oval Connector									$240.41
				Quantity		Unit Price		Factor		Total		
			Installation	14.00	x	15.17	x	1.1320	=	240.41		
			exhaust ducting for dyer per plans									
170	23 33 13 13 0006	EA	12" Diameter Radial Opposed Blade Damper Round, Steel Construction, Manual Operated									$140.78
				Quantity		Unit Price		Factor		Total		
			Installation	1.00	x	113.45	x	1.1320	=	128.43		
			Demolition	1.00	x	10.91	x	1.1320	=	12.35		
			HVAC per plans									
171	23 33 46 00 0008	LF	12" Diameter Flexible Duct, R8.0 Insulated With Polyester Inner Liner And Metallized Outer Jacket									$2,231.74
				Quantity		Unit Price		Factor		Total		
			Installation	100.00	x	15.36	x	1.1320	=	1,738.75		
			Demolition	130.00	x	3.35	x	1.1320	=	492.99		
			HVAC per plans									
172	23 33 46 00 0020	EA	12" Diameter Flexible Duct Collar, Spin In Type, Sheet Metal, With Damper									$100.97
				Quantity		Unit Price		Factor		Total		
			Installation	1.00	x	76.62	x	1.1320	=	86.73		
			Demolition	1.00	x	12.58	x	1.1320	=	14.24		
			HVAC per plans									
173	23 34 16 00 0127	EA	30" Diameter Wheel, 2 HP, 10,192 CFM At 1/4" Static Pressure, Belt Drive, Kitchen Upblast Exhaust Fan115/208-230/60/3. Includes heat baffle, grease baffle and disconnect switch.									$9,622.60
				Quantity		Unit Price		Factor		Total		
			Installation	2.00	x	4,153.39	x	1.1320	=	9,403.27		
			Demolition	1.00	x	193.75	x	1.1320	=	219.33		
			removal of one existing and installation of 2 new									
174	23 34 16 00 0275	EA	109 CFM, Ceiling/Wall Mounted, Metal Intake Grille, Heavy Duty/Continuous Operation Exhaust Fan (Broan® LoSone® Ventilator L100MG)									$897.54
				Quantity		Unit Price		Factor		Total		
			Installation	2.00	x	379.30	x	1.1320	=	858.74		
			Demolition	1.00	x	34.28	x	1.1320	=	38.80		
			exhaust fan per plans EF-1									
175	23 37 13 13 0080	EA	20" x 20" Single Deflection Return/Exhaust Register, Aluminum, Opposed Blade Damper, Wall/Ceiling									$319.70
				Quantity		Unit Price		Factor		Total		
			Installation	1.00	x	265.64	x	1.1320	=	300.70		
			Demolition	1.00	x	16.78	x	1.1320	=	18.99		
			HVAC per plans									
176	23 37 13 13 0225	EA	18" x 8" 4-Way Adjustable Wall Supply Grille, Adjustable Deflection, Aluminum Construction									$2,395.67
				Quantity		Unit Price		Factor		Total		
			Installation	7.00	x	275.90	x	1.1320	=	2,186.23		
			Demolition	11.00	x	16.82	x	1.1320	=	209.44		
			HVAC per plans									
177	23 54 16 13 0007	EA	120 MBH, 2,000 CFM Up/Horizontal Flow Multi-Speed, Two Stage 96% AFUE Gas FurnaceBlower cooling capacity up to 5 tons.									$5,879.99
				Quantity		Unit Price		Factor		Total		
			Installation	2.00	x	2,597.17	x	1.1320	=	5,879.99		
			per plans. SH-1 and SH-2 wall mounted furnaces									

Contractor's Price Proposal - Detail Continues..

Work Order Number: 116755.00
Work Order Title: Fashion Park Unit 234 Conversion

Section - 23

178	23 81 49 00 0020	EA	7-1/2 Ton Indoor Section Split Heat Pump Packaged Unit, Horizontal Upflow With 10 KW Electric Heat									$4,932.97
				Quantity		Unit Price		Factor		Total		
			Installation	1.00	x	4,047.74	x	1.1320	=	4,582.04		
			Demolition	1.00	x	310.01	x	1.1320	=	350.93		
			new furnace per clients request									

Subtotal for Section - 23 **$30,704.85**

Section - 26

179	26 01 20 91 0002	EA	Lock Out/Tag Out Local DisconnectExcludes tag or padlock See CSI section 26 01 20 91-0004 for padlock, 26 01 20 91-0005 for tag(s).									$523.83
				Quantity		Unit Price		Factor		Total		
			Installation	15.00	x	30.85	x	1.1320	=	523.83		
			LOTO of existing circuits									
180	26 05 19 16 0402	MLF	#12 AWG, 3 Conductors, 600 Volt, Type NM, Copper, Non-Metallic Sheathed Cable									$12,214.42
				Quantity		Unit Price		Factor		Total		
			Installation	4.00	x	2,697.53	x	1.1320	=	12,214.42		
			for new electrical runs per plans									
181	26 05 19 16 0402	0377	For Installation In Wood Stud Wall (Includes Drilling), Add									$1,272.82
				Quantity		Unit Price		Factor		Total		
			Installation	4.00	x	281.10	x	1.1320	=	1,272.82		
182	26 09 23 00 0109	EA	Wall Switch Replacement Occupancy Sensor, Single GangIncludes integral occupancy sensor and relay.									$1,204.00
				Quantity		Unit Price		Factor		Total		
			Installation	10.00	x	106.36	x	1.1320	=	1,204.00		
			per plans									
183	26 09 23 00 0235	EA	Passive Infrared, Wall Switch Mounted, Wired Occupancy Sensor (Encelium PW-100-24)Excludes GB II cable.									$586.31
				Quantity		Unit Price		Factor		Total		
			Installation	2.00	x	258.97	x	1.1320	=	586.31		
			for bathrooms									
184	26 24 13 00 0213	EA	800 Amperes, 480 Volt, 4 Wire, Switchboard Incoming No Switch Circuit									$5,781.11
				Quantity		Unit Price		Factor		Total		
			Installation	1.00	x	4,332.49	x	1.1320	=	4,904.38		
			Demolition	1.00	x	774.50	x	1.1320	=	876.73		
			for new main panel to new units subpanels									
185	26 24 16 00 0470	EA	200 Ampere Rating, Main Breaker, Indoor, 42 Circuit, 4 Wire, 120/208 Volt, Assembled Panelboard With 20 Ampere, 1 Pole Plug-In Breakers									$7,931.90
				Quantity		Unit Price		Factor		Total		
			Installation	2.00	x	3,075.97	x	1.1320	=	6,964.00		
			Demolition	1.00	x	855.04	x	1.1320	=	967.91		
			1 new sub panel for each unit									
186	26 27 13 00 0125	EA	Single Phase M-90 Meter, Socket, NEMA 3R Enclosure									$6,442.28
				Quantity		Unit Price		Factor		Total		
			Installation	6.00	x	905.76	x	1.1320	=	6,151.92		
			Demolition	5.00	x	51.30	x	1.1320	=	290.36		
			installation of new meters for building									
187	26 27 26 00 0009	EA	20 Amperes, 1 Gang, GFI, Duplex Receptacle Assembly									$3,825.42
				Quantity		Unit Price		Factor		Total		
			Installation	30.00	x	96.40	x	1.1320	=	3,273.74		
			Demolition	15.00	x	32.49	x	1.1320	=	551.68		
			All new GFI outlets throughout per clients request									

Contractor's Price Proposal - Detail Continues..

Work Order Number: 116755.00
Work Order Title: Fashion Park Unit 234 Conversion

Section - 26

188	26 27 26 00 0125		EA	20 Amperes, 125 Volt Single Specification Grade Tamper Resistant ReceptaclePass & Seymour TR5351.									$1,944.32
					Quantity		Unit Price		Factor		Total		
				Installation	40.00	x	34.39	x	1.1320	=	1,557.18		
				Demolition	40.00	x	8.55	x	1.1320	=	387.14		
				all new outlets throughout per clients request									
189	26 27 26 00 0138		EA	1 Gang, 20 Amperes, 120/277 Volt, SPST, Switch Assembly									$3,327.23
					Quantity		Unit Price		Factor		Total		
				Installation	25.00	x	85.08	x	1.1320	=	2,407.76		
				Demolition	25.00	x	32.49	x	1.1320	=	919.47		
				25 switches total in both units									
190	26 51 19 00 0312		EA	8" Diameter, 1,200 Lumens, Recessed LED Downlight With Open Trim (Lithonia DOM8 LED)									$7,780.09
					Quantity		Unit Price		Factor		Total		
				Installation	19.00	x	324.11	x	1.1320	=	6,970.96		
				Demolition	19.00	x	37.62	x	1.1320	=	809.13		
				19 new slim LED lights per plans and owners request									
191	26 51 19 00 0312	0543	EA	For Dimming Driver And Sensor Switch nLight Dimming Relay, Add									$1,339.77
					Quantity		Unit Price		Factor		Total		
				Installation	17.00	x	69.62	x	1.1320	=	1,339.77		
192	26 51 19 00 0430		EA	5" Shallow, Insulated Ceiling, Air-Tite New Construction (Cooper Halo H25ICAT)									$314.84
					Quantity		Unit Price		Factor		Total		
				Installation	3.00	x	92.71	x	1.1320	=	314.84		
				3 new 5" slim LED lights per plans									
193	26 51 19 00 0470		EA	2-1/2" Diameter x 15-1/2" High, Polished Nickel, LED Wall Sconce (Hudson Valley Lighting SHAW 1200-PN)									$1,017.22
					Quantity		Unit Price		Factor		Total		
				Installation	2.00	x	415.10	x	1.1320	=	939.79		
				Demolition	2.00	x	34.20	x	1.1320	=	77.43		
				2 new wall sconces per plans in bathrooms									
194	26 56 19 00 0031		EA	9,503 Lumens, 77 Watt, 3 LEDs, Wall Mounted Security Fixture (Jarvis Corp WMFT-350)									$1,530.14
					Quantity		Unit Price		Factor		Total		
				Installation	3.00	x	388.10	x	1.1320	=	1,317.99		
				Demolition	3.00	x	62.47	x	1.1320	=	212.15		
				replace 3 existing exterior lights per clients request									

Subtotal for Section - 26 **$57,035.70**

Section - 31

195	31 05 16 00 0002		CY	#2 Stone Aggregate Fill (1-1/2" To 2-1/2" Clean)									$1,295.01
					Quantity		Unit Price		Factor		Total		
				Installation	25.00	x	45.76	x	1.1320	=	1,295.01		
				4" deep, 200 LF, 2' wide base for backfill for trenching. 20 CY for footings, and slabs									
196	31 05 16 00 0002	0053		For Up To 8, Add									$51.79
					Quantity		Unit Price		Factor		Total		
				Installation	5.00	x	9.15	x	1.1320	=	51.79		
197	31 11 00 00 0008		ACR	Clearing By Machine - Light Brush Without Grub									$174.72
					Quantity		Unit Price		Factor		Total		
				Installation	0.50	x	308.69	x	1.1320	=	174.72		
				clear out weeds in back yard									

Contractor's Price Proposal - Detail Continues..

Work Order Number: 116755.00
Work Order Title: Fashion Park Unit 234 Conversion

Section - 31

198	31 11 00 00 0017	CY	Hand Loading Of Cleared And Grubbed Material									$849.91
				Quantity		Unit Price		Factor		Total		
			Installation	20.00	x	37.54	x	1.1320	=	849.91		
			clear out weeds in back yard									
199	31 23 16 13 0007	CY	Excavation For Trenching By Hand In SoilIncludes stockpiling excess materials and trimming sides and bottom of trench.									$3,505.24
				Quantity		Unit Price		Factor		Total		
			Installation	25.00	x	123.86	x	1.1320	=	3,505.24		
			20" deep, 200 LF, 2' wide									
200	31 23 16 13 0011	CY	Backfilling or Placing Subbase for Trenches with Imported or Stockpiled Materials by Hand									$973.80
				Quantity		Unit Price		Factor		Total		
			Installation	25.00	x	34.41	x	1.1320	=	973.80		
			20" deep, 200 LF, 2' wide									
201	31 23 16 13 0014	CY	Compaction of Fill or Subbase for Trenches by Hand									$1,098.61
				Quantity		Unit Price		Factor		Total		
			Installation	25.00	x	38.82	x	1.1320	=	1,098.61		
			20" deep, 200 LF, 2' wide									
202	31 23 16 36 0009	CY	Excavation For Building Foundations And Other Structures By Hand in Soil									$6,309.43
				Quantity		Unit Price		Factor		Total		
			Installation	45.00	x	123.86	x	1.1320	=	6,309.43		
			for footings and slab									
203	31 23 16 36 0019	CY	Backfilling Around Building Foundations And Other Structures By Hand									$1,335.53
				Quantity		Unit Price		Factor		Total		
			Installation	20.00	x	58.99	x	1.1320	=	1,335.53		
			for footings and slab									
204	31 23 16 36 0022	CY	Compaction Of Fill Or Subbase For Building Foundations and Other Structures by Hand									$1,976.98
				Quantity		Unit Price		Factor		Total		
			Installation	45.00	x	38.81	x	1.1320	=	1,976.98		
			for footings and slab									

Subtotal for Section - 31 **$17,571.02**

Section - 32

205	32 16 13 13 0016	LF	6" x 12" Cast In Place Concrete Gutter With 6" Curb And Face - Straight									$609.07
				Quantity		Unit Price		Factor		Total		
			Installation	15.00	x	24.92	x	1.1320	=	423.14		
			Demolition	15.00	x	10.95	x	1.1320	=	185.93		
			for parking lot ADA modifications									
206	32 16 23 00 0002	SF	4" Cast In Place Concrete Sidewalk									$586.15
				Quantity		Unit Price		Factor		Total		
			Installation	60.00	x	8.63	x	1.1320	=	586.15		
			for parking lot ADA modifications									
207	32 16 23 00 0002 0094		For Up To 100, Add									$248.59
				Quantity		Unit Price		Factor		Total		
			Installation	60.00	x	3.66	x	1.1320	=	248.59		
208	32 16 23 00 0008	EA	Finish Concrete Handicap Drop Section In SidewalkExcludes patterned (tactile) finish.									$145.65
				Quantity		Unit Price		Factor		Total		
			Installation	1.00	x	128.67	x	1.1320	=	145.65		
			for parking lot ADA modifications									

Contractor's Price Proposal - Detail Continues..

Work Order Number: 116755.00
Work Order Title: Fashion Park Unit 234 Conversion

Section - 32

209	32 17 23 13 0074	SF	Solid Area, Painted Pavement Marking For Parking AreasUse task for lines >12" wide, stop bars, transverse lines, diagonal lines, crossing lanes, etc.									$281.82
				Quantity		Unit Price		Factor		Total		
			Installation	64.00	x	3.89	x	1.1320	=	281.82		
			for parking lot ADA modifications									
210	32 17 23 13 0088	EA	Handicap Symbol For Van Parking Stalls, Painted Pavement Marking For Parking AreasApproximate overall dimensions: 4-1/3' width x 5' height. White or blue symbol. Excludes striping.									$86.15
				Quantity		Unit Price		Factor		Total		
			Installation	2.00	x	38.05	x	1.1320	=	86.15		
			for parking lot ADA modifications									
211	32 17 26 00 0003	SF	Embedded, VPC Truncated Dome Detectable Warning SurfaceAlso raised strips or directional bars. All colors.									$832.25
				Quantity		Unit Price		Factor		Total		
			Installation	16.00	x	45.95	x	1.1320	=	832.25		
			new truncated domes per A-501									
212	32 31 23 00 0006	LF	6' High Privacy Tongue And Groove Vinyl Fence									$3,593.82
				Quantity		Unit Price		Factor		Total		
			Installation	45.00	x	63.16	x	1.1320	=	3,217.37		
			Demolition	45.00	x	7.39	x	1.1320	=	376.45		
			removal of existing vinyl fence and installation of new due to ADA width requirements . includes a 4' wide ADA gate									
213	32 31 23 00 0051	EA	6' High x 4' Wide Vinyl Gate For Privacy Or Semi-Privacy Fence And Hinge Set									$757.38
				Quantity		Unit Price		Factor		Total		
			Installation	1.00	x	611.32	x	1.1320	=	692.01		
			Demolition	1.00	x	57.74	x	1.1320	=	65.36		
			removal of existing vinyl fence and installation of new due to ADA width requirements . includes a 4' wide ADA gate									
214	32 31 23 00 0078	EA	Stainless Steel Latch Set									$124.46
				Quantity		Unit Price		Factor		Total		
			Installation	1.00	x	109.95	x	1.1320	=	124.46		
			removal of existing vinyl fence and installation of new due to ADA width requirements . includes a 4' wide ADA gate									

Subtotal for Section - 32 **$7,265.34**

Proposal Total **$610,749.96**

This total represents the correct total for the proposal. Any discrepancy between line totals, sub-totals and the proposal total is due to rounding.

The Percentage of NPP on this Proposal: **%**

GORDIAN®

Subcontractor Listing

Date: June 06, 2023

Re:

IQC Master Contract #:	CA-R7-GB06-123021-MDJ
Work Order #:	116755.00
Owner PO #:	
Title:	Fashion Park Unit 234 Conversion
Contractor:	MDJ Management
Proposal Value:	$610,749.96

Name of Contractor	Duties	Amount	%
Janus Corporation		$100,000.00	16.37
Refined Construction		$450,000.00	73.68

EXHIBIT A

GORDIAN®

Work Order Signature Document

EZIQC Contract No.: CA-R7-GB06-123021-MDJ

[X] **New Work Order** [ ] **Modify an Existing Work Order**

Work Order Number.:	116757.00	Work Order Date:	06/06/2023
Work Order Title:	Fashion Park Unit 251 Conversion		
Owner Name:	Oxnard Housing Authority	Contractor Name:	MDJ Management
Contact:	Fredi Contreras	Contact:	Matt McMillon
Phone:	805-890-8319	Phone:	310-490-1521

Work to be Performed

Work to be performed as per the Final Detailed Scope of Work Attached and as per the terms and conditions of Sourcewell EZIQC Contract No CA-R7-GB06-123021-MDJ.

Brief Work Order Description:

Time of Performance Estimated Start Date:

Estimated Completion Date:

Liquidated Damages Will apply: [ ] Will not apply: [X]

Work Order Firm Fixed Price: $610,749.96

Owner Purchase Order Number:

Approvals

Oxnard Housing Authority Date

MDJ Management Date

Detailed Scope of Work

To: Matt McMillon
MDJ Management
531 Main St #611
El Segundo, CA 90245
310-490-1521

From: Fredi Contreras
Oxnard Housing Authority
300 N. Marquita Street
Oxnard, CA 93030
805-890-8319

Date Printed: June 06, 2023

Work Order Number: 116757.00

Work Order Title: Fashion Park Unit 251 Conversion

Brief Scope:

☐ **Preliminary** ☐ **Revised** ☒ **Final**

The following items detail the scope of work as discussed at the site. All requirements necessary to accomplish the items set forth below shall be considered part of this scope of work.

See attached

Subject to the terms and conditions of ezIQC Contract **CA-R7-GB06-123021-MDJ**.

MDJ Management _____ Date _____

Oxnard Housing Authority _____ Date _____

MDJ Management, LLC
License # 1044711
DIR # 1000061313
531 Main St. #611 El Segundo CA 90245
310-490-1521

Job Name: 251 Fashion Park ADA Conversion
Location: 251 Fashion Park Oxnard, CA 93036
Customer: Oxnard Housing Authority

Submission Date: 5/31/23

Detailed Scope of Work

Demolition

- Demolition of existing apartment per plans
- Per Asbestos Survey report provided by client all walls, ceilings and floors to be considered ACM
    - Demolition of unit to be performed by certified hazardous material demolition company

Installation/Buildout

- Saw cutting of slab and demolition of concrete for new plumbing
- Excavation for new plumbing and new concrete footings for addition
- All framing throughout including new walls and soffits
- New rough and finish plumbing throughout
- New electrical rough including new panel per plan
- Concrete work:
    - Pour new footings for addition
    - Pour back all open trenches inside the unit
    - Pour slab for addition
    - Our sidewalk as required
- New windows and doors
- New Insulation
- HVAC ductwork, registers, and wall heaters.
    - Includes new forced air unit
- Drywall throughout
- Lath, stucco, and color coat to match existing
- Roofing, fascia, and gutters for new addition
- Interior paint
- New Flooring and base
- New kitchens, countertops, fixtures, sinks and appliances.

- New bathroom fixtures per plan
- Paint exterior of building
- Site work:
    - New sidewalks
    - Handicap ramp with truncated domes
    - Handicap striping
    - New signage at Handicap stall

Installation/Buildout added by Client NOT included on plans

- Remove and replace all outlets and switches throughout, even on all existing walls
- Remove and replace exterior lighting with LED lighting
    - Match existing 3 fixtures
- Install MDF baseboards
    - Instead of called out cove base
- Remove and replace all interior doors. Complete list of doors from plans as well as clients request:
    - Demo of 3 utility closet, 2 sliding closet, 5 bedroom, and 2 bathroom doors
    - Installation of 2 utility closet, 3 sliding closet, 3 bedroom, 2 bathroom doors, and 1 front door
- Clean up existing back yard, the weeds are 5 feet high
    - Includes weed weed whacking and removal of all dead weeds
- Remove and replace one section of vinyl fence because it is not wide enough for ADA width along concrete path to front door
    - 45 feet x 6 feet high
    - (1) One 4' Gate
    - Includes widening the concrete by one foot

Notes:

- All work to be performed per plans provided to MDJ
- Any additional add on items will be at the request of Customer. Any adjustment shall be an additional cost.
- Price includes all labor (**Normal Working Hours - Davis Bacon Wages**), materials, equipment to complete this scope of work.
- Construction Exclusions:
    - New Washer and Dryer not included in contract.

CLARIFICATIONS AND EXCLUSIONS:

- Warranty
    - One year warranty against workmanship
    - Manufacturer's warranty varies
- We exclude plans, permits, permit fees, related fees, testing, inspection, survey, and engineering unless specified above
- We exclude utilities and hazardous or contaminated material.
- Construction water, power, and sanitary facilities available on site for MDJ's use at no cost.
- We exclude premium time.
- We exclude anything not specifically mentioned above.
- MDJ reserves the right to review, change, and/or delete any provisions of any prime contract or subcontract, which results from this quotation.

- All terms to be net 30 days in full upon receipt of invoice. Interest will be charged at the rate of 2% monthly on the unpaid balance.

BID PRICE: See Price Proposal

All work to be completed in a substantial and workmanlike manner according to standard practices for the sum of **See Price Proposal.** Any additional add on items will be at the request of Customer. Any adjustment shall be an additional cost.

Bid price is good for thirty (30) days only.

Any controversy or claim based on, arising out of, or relating to this agreement, or breach thereof, including any claim based on the work performed pursuant to this agreement, shall be submitted to the American Arbitration Association for binding arbitration in accordance with its rules. If any arbitration, legal action is brought to enforce this agreement, or arising out of or relating to the agreement, the prevailing party shall be entitled to recover from the non-prevailing party reasonable attorney fees and costs incurred, in addition to any and all other relief to which that party may be entitled.

Submitted by:

Matthew McMillon
President MDJ
310.490.1521
matt@buildwithmdj.com

Contractor's Price Proposal - Summary

Date: June 06, 2023

Re:

IQC Master Contract #:	CA-R7-GB06-123021-MDJ
Work Order #:	116757.00
Owner PO #:	
Title:	Fashion Park Unit 251 Conversion
Contractor:	MDJ Management
Proposal Value:	$610,749.96

Section - 01	**$27,922.15**
Section - 02	**$124,779.67**
Section - 03	**$44,628.54**
Section - 06	**$30,807.26**
Section - 07	**$39,946.76**
Section - 08	**$16,937.65**
Section - 09	**$136,489.60**
Section - 10	**$1,650.96**
Section - 11	**$6,131.21**
Section - 12	**$7,227.87**
Section - 22	**$61,651.38**
Section - 23	**$30,704.85**
Section - 26	**$57,035.70**
Section - 31	**$17,571.02**
Section - 32	**$7,265.34**
Proposal Total	**$610,749.96**

Thisl total represents the correct total for the proposal. Any discrepancy between line totals, sub-totals and the proposal total is due to rounding.

The Percentage of NPP on this Proposal: %

Contractor's Price Proposal - Detail

Date: June 06, 2023

Re:

IQC Master Contract #:	CA-R7-GB06-123021-MDJ
Work Order #:	116757.00
Owner PO #:	
Title:	Fashion Park Unit 251 Conversion
Contractor:	MDJ Management
Proposal Value:	$610,749.96

	Sect.	Item	Mod.	UOM	Description	Line Total
Labor	Equip.	Material	(Excludes)			

Section - 01

1	01 22 16	00 0002		EA	Reimbursable FeesReimbursable Fees will be paid to the contractor for eligible costs as directed by Owner. Insert the appropriate quantity to adjust the base cost to the actual Reimbursable Fee. If there are multiple Reimbursable Fees, list each one separately and add a comment in the "note" block to identify the Reimbursable Fee (e.g. sidewalk closure, road cut, various permits, extended warranty, expedited shipping costs, etc.). A copy of each receipt shall be submitted with the Price Proposal.	$13,147.20

	Quantity		Unit Price		Factor		Total
Installation	11,952.00	x	1.00	x	1.1000	=	13,147.20

Bond = $597,602 x 2%

2	01 74 19	00 0016		EA	40 CY Dumpster (5 Ton) "Construction Debris"Includes delivery of dumpster, rental cost, pick-up cost, hauling, and disposal fee. Non-hazardous material.	$11,002.63

	Quantity		Unit Price		Factor		Total
Installation	12.00	x	809.97	x	1.1320	=	11,002.63

10 dumpsters for abatement debris: cabinets, drywall from entire house, shower, toilet, stucco, insulation, ...
2 dumpsters for construction debris: drywall cuts, lumber cuts, basic trash

3	01 74 19	00 0019		EA	15 CY Low-Boy Dumpster Mixed RecyclableFor mixed dirt, rock, concrete brick or asphalt with no trash or organics. Includes service to deliver and pick-up dumpster, hauling, rental and disposal fee.	$3,772.32

	Quantity		Unit Price		Factor		Total
Installation	4.00	x	833.11	x	1.1320	=	3,772.32

for removal of excavated soil for footings, slab, trenching

Subtotal for Section - 01 **$27,922.15**

Section - 02

4	02 41 19	13 0063		LF	Rod Reinforced Concrete Slab Up To 4" Depth, Saw Cut	$2,499.46

	Quantity		Unit Price		Factor		Total
Installation	400.00	x	5.52	x	1.1320	=	2,499.46

sawcut existing slab to trench for new electrical and plumbing runs as needed per plans

5	02 82 33	00 0067		SF	>2,500 To 10,000 SF, Single Layer Gypsum Wall Board, Asbestos Abatement And Disposal	$62,951.52

	Quantity		Unit Price		Factor		Total
Installation	6,684.00	x	8.32	x	1.1320	=	62,951.52

demolition throughout. All drywall mud is hot. ceilings and walls

6	02 82 33	00 0074		SF	>500 To 2,500 SF, Gypsum Wall Board (Or Backer Board) With Ceramic Tile And Mastic, Asbestos Abatement And Disposal	$12,439.55

	Quantity		Unit Price		Factor		Total
Installation	550.00	x	19.98	x	1.1320	=	12,439.55

demolition of bathrooms tile and backer board walls and floor as well as kitchen tile

7	02 82 33	00 0087		SF	>500 To 2,500 SF, Spray On Acoustical Ceiling, Asbestos Abatement And Disposal	$16,659.92

	Quantity		Unit Price		Factor		Total
Installation	1,564.00	x	9.41	x	1.1320	=	16,659.92

demolition

Contractor's Price Proposal - Detail Continues..

Work Order Number: 116757.00
Work Order Title: Fashion Park Unit 251 Conversion

Section - 02

8	02 82 33 00 0101		SF	>500 To 2,500 SF, Single Layer Or First Of Multiple Layers, Floor Tile, Asbestos Abatement And Disposal									$10,959.07
			Installation	Quantity 1,564.00	x	Unit Price 6.19	x	Factor 1.1320	=	Total 10,959.07			
			demolition of 2 layers of floor tile										
9	02 82 33 00 0101	0001		For Each Additional Layer, Add									$2,744.19
			Installation	Quantity 1,564.00	x	Unit Price 1.55	x	Factor 1.1320	=	Total 2,744.19			
10	02 82 33 00 0245		CF	>100 To 250 CF, Asbestos Contaminated Debris, Asbestos Abatement And Disposal									$13,881.15
			Installation	Quantity 250.00	x	Unit Price 49.05	x	Factor 1.1320	=	Total 13,881.15			
			demolition of all cabinets and vanities per plans. They are attached to the walls so removal would disturb drywall material that is hot. This is for kitchen and bathroom										
11	02 82 33 00 0333		SF	High Efficiency Particulate Air (HEPA) Vacuum And Cleaning Of Contaminated Area									$1,186.20
			Installation	Quantity 1,564.00	x	Unit Price 0.67	x	Factor 1.1320	=	Total 1,186.20			
			demolition part of abatement procedures										
12	02 89 00 00 0021		EA	3 Stage Portable Personnel Decontamination Wash FacilityIncludes connection to negative air system.									$907.07
			Installation	Quantity 1.00	x	Unit Price 801.30	x	Factor 1.1320	=	Total 907.07			
			demolition part of abatement procedures										
13	02 89 00 00 0023		EA	Portable Waste Decontamination UnitIncludes connection to negative air system.									$551.54
			Installation	Quantity 1.00	x	Unit Price 487.23	x	Factor 1.1320	=	Total 551.54			
			demolition										

Subtotal for Section - 02 **$124,779.67**

Section - 03

14	03 11 13 00 0003		SF	Continuous Footings Foundation Wood Formwork									$1,882.74
			Installation	Quantity 240.00	x	Unit Price 6.93	x	Factor 1.1320	=	Total 1,882.74			
			footing for new addition										
15	03 11 13 00 0003	0001		For <1,000, Add									$350.47
			Installation	Quantity 240.00	x	Unit Price 1.29	x	Factor 1.1320	=	Total 350.47			
16	03 11 13 00 0009		LF	Up To 6" High Slab Edge and Block-Out Wood Formwork									$699.89
			Installation	Quantity 116.00	x	Unit Price 5.33	x	Factor 1.1320	=	Total 699.89			
			for new addition										
17	03 11 13 00 0009	0004		For Up To 250, Add									$69.28
			Installation	Quantity 60.00	x	Unit Price 1.02	x	Factor 1.1320	=	Total 69.28			
18	03 21 11 00 0251		EA	Dowels Or Hairpin, 1/2" x 30" Length, Drilled And Epoxy In Concrete, 6" Embedment									$5,682.36
			Installation	Quantity 225.00	x	Unit Price 22.31	x	Factor 1.1320	=	Total 5,682.36			
			200 LF of trenching. Epoxy and Dowel every 2'. One on each side. For reinforcement and tying into existing slab adjacent. 25 dowels to attach from porch sidewalk to existing .										

Contractor's Price Proposal - Detail Continues..

Work Order Number: 116757.00
Work Order Title: Fashion Park Unit 251 Conversion

Section - 03

19	03 21 13 00 0093		LF	#6, Grade 50, Slab On Grade, Galvanized Steel Reinforcement Bar								$2,010.43
					Quantity		Unit Price		Factor		Total	
				Installation	800.00	x	2.22	x	1.1320	=	2,010.43	
				200 LF of trenching and 600 LF for slab, porch, and footings. Installation of rebar every 2'.								
20	03 30 53 00 0007		CF	Hand Mix And Place ConcreteFor use where conventional equipment access is limited or when directed by the owner.								$6,592.77
					Quantity		Unit Price		Factor		Total	
				Installation	200.00	x	29.12	x	1.1320	=	6,592.77	
				patch back trenching in existing slab								
21	03 31 13 00 0003		SF	4" 3,000 PSI Slab On Grade Concrete Slabs Assembly								$1,768.18
					Quantity		Unit Price		Factor		Total	
				Installation	200.00	x	7.81	x	1.1320	=	1,768.18	
				for new addition								
22	03 31 13 00 0003	0156		For Up To 500, Add								$681.46
					Quantity		Unit Price		Factor		Total	
				Installation	200.00	x	3.01	x	1.1320	=	681.46	
23	03 31 13 00 0023		CY	Concrete Pump, Place 3,000 PSI Concrete Spread FootingsExcludes pumping equipment.								$14,833.73
					Quantity		Unit Price		Factor		Total	
				Installation	50.00	x	262.08	x	1.1320	=	14,833.73	
				24 CY footing for new addition. 26 CY for Front porch/sloped walk								
24	03 31 13 00 0023	0040		For >20 To 50, Add								$638.45
					Quantity		Unit Price		Factor		Total	
				Installation	50.00	x	11.28	x	1.1320	=	638.45	
25	03 54 16 00 0005		SF	1/2" Thick Self Leveling Cementitious Underlayment For FloorsIncluding Surface Preparation								$9,418.78
					Quantity		Unit Price		Factor		Total	
				Installation	1,564.00	x	5.32	x	1.1320	=	9,418.78	
				self leveling of floors for prior to installation of new vinyl plank flooring								

Subtotal for Section - 03 **$44,628.54**

Section - 06

26	06 11 16 00 0061		SF	2" x 4" Wood Wall Framing At 16" On Center								$2,351.16
					Quantity		Unit Price		Factor		Total	
				Installation	950.00	x	1.58	x	1.1320	=	1,699.13	
				Demolition	800.00	x	0.72	x	1.1320	=	652.03	
				for new walls, new addition, and soffits. Couple walls require double stacked 2x4 staggered A-602								
27	06 11 16 00 0062		SF	2" x 6" Wood Wall Framing At 16" On Center								$616.94
					Quantity		Unit Price		Factor		Total	
				Installation	250.00	x	2.18	x	1.1320	=	616.94	
				2x6 wall per plans								
28	06 11 16 00 0062	0004		For >200 To 500, Add								$101.88
					Quantity		Unit Price		Factor		Total	
				Installation	250.00	x	0.36	x	1.1320	=	101.88	
29	06 11 16 00 0063		SF	2" x 8" Wood Wall Framing At 16" On Center								$263.53
					Quantity		Unit Price		Factor		Total	
				Installation	80.00	x	2.91	x	1.1320	=	263.53	
				2x8 wall per plans								

Contractor's Price Proposal - Detail Continues..

Work Order Number: 116757.00
Work Order Title: Fashion Park Unit 251 Conversion

Section - 06

30	06 11 16 00 0063	0003		For Up To 200, Add									$86.94
			Installation	Quantity 80.00	x	Unit Price 0.96	x	Factor 1.1320	=	Total 86.94			
31	06 11 16 00 0179		LF	2" x 4" Pressure Treated Lumber, For Roofing Nailers									$871.64
			Installation	Quantity 250.00	x	Unit Price 3.08	x	Factor 1.1320	=	Total 871.64			
			for roof framing										
32	06 11 16 00 0183		LF	2" x 4" Pressure Treated Lumber, For Roofing Sleepers									$464.12
			Installation	Quantity 250.00	x	Unit Price 1.64	x	Factor 1.1320	=	Total 464.12			
			for roof framing										
33	06 16 33 00 0006		SF	3/4" Thick CDX Plywood Roof DeckingApplied to wood rafters.									$690.52
			Installation	Quantity 250.00	x	Unit Price 2.44	x	Factor 1.1320	=	Total 690.52			
			for new addition roof										
34	06 16 33 00 0006	0040		For Tongue And Groove, Add									$19.81
			Installation	Quantity 250.00	x	Unit Price 0.07	x	Factor 1.1320	=	Total 19.81			
35	06 16 33 00 0012		SF	1/2" Interior BC Plywood Wall SheathingApplied to wall studs.									$1,036.91
			Installation	Quantity 400.00	x	Unit Price 2.29	x	Factor 1.1320	=	Total 1,036.91			
			for new addition per plans										
36	06 16 33 00 0012	0005		For Shear Wall Construction, Add									$135.84
			Installation	Quantity 400.00	x	Unit Price 0.30	x	Factor 1.1320	=	Total 135.84			
37	06 16 33 00 0012	0006		For Exterior CC Grade Plywood, Add									$54.34
			Installation	Quantity 400.00	x	Unit Price 0.12	x	Factor 1.1320	=	Total 54.34			
38	06 16 33 00 0020		SF	3/4" CD Grade Plywood Floor DeckingApplied to floor or joists.									$5,169.71
			Installation	Quantity 1,564.00	x	Unit Price 2.36	x	Factor 1.1320	=	Total 4,178.26			
			Demolition	1,564.00	x	0.56	x	1.1320	=	991.45			
			for new floor decking per plans FSI/A-602. plans require glue										
39	06 16 33 00 0020	0038		For Exterior Glue, Add									$1,593.40
			Installation	Quantity 15,640.00	x	Unit Price 0.09	x	Factor 1.1320	=	Total 1,593.40			
40	06 41 13 00 0225		EA	15" Wide, 35" High x 23-3/4" Deep, Single Drawer and Single Door, Solid Wood Face Frame, Thermofoil Door and Drawer Front, Base Cabinet									$736.43
			Installation	Quantity 2.00	x	Unit Price 325.28	x	Factor 1.1320	=	Total 736.43			
			demolition of 1 kitchen and installation of 2 new kitchen cabinets per plans										
41	06 41 13 00 0225	0126		For Solid Wood Drawers, Dovetail Joints And Full Extension Drawer Guides, Add									$231.72
			Installation	Quantity 2.00	x	Unit Price 102.35	x	Factor 1.1320	=	Total 231.72			
42	06 41 13 00 0225	0130		For All Plywood Box Construction, Add									$241.55
			Installation	Quantity 2.00	x	Unit Price 106.69	x	Factor 1.1320	=	Total 241.55			

Contractor's Price Proposal - Detail Continues..

Work Order Number: 116757.00
Work Order Title: Fashion Park Unit 251 Conversion

Section - 06

43	06 41 13 00 0226		EA	18" Wide, 35" High x 23-3/4" Deep, Single Drawer and Single Door, Solid Wood Face Frame, Thermofoil Door and Drawer Front, Base Cabinet									$770.08
			Installation	Quantity 2.00	x	Unit Price 340.14	x	Factor 1.1320	=	Total 770.08			
				demolition of 1 kitchen and installation of 2 new kitchen cabinets per plans									
44	06 41 13 00 0226	0126		For Solid Wood Drawers, Dovetail Joints And Full Extension Drawer Guides, Add									$231.72
			Installation	Quantity 2.00	x	Unit Price 102.35	x	Factor 1.1320	=	Total 231.72			
45	06 41 13 00 0226	0130		For All Plywood Box Construction, Add									$241.55
			Installation	Quantity 2.00	x	Unit Price 106.69	x	Factor 1.1320	=	Total 241.55			
46	06 41 13 00 0228		EA	24" Wide, 35" High x 23-3/4" Deep, Single Drawer and Single Door, Solid Wood Face Frame, Thermofoil Door and Drawer Front, Base Cabinet									$460.91
			Installation	Quantity 1.00	x	Unit Price 407.16	x	Factor 1.1320	=	Total 460.91			
				demolition of 1 kitchen and installation of 2 new kitchen cabinets per plans									
47	06 41 13 00 0228	0126		For Solid Wood Drawers, Dovetail Joints And Full Extension Drawer Guides, Add									$115.86
			Installation	Quantity 1.00	x	Unit Price 102.35	x	Factor 1.1320	=	Total 115.86			
48	06 41 13 00 0228	0130		For All Plywood Box Construction, Add									$120.77
			Installation	Quantity 1.00	x	Unit Price 106.69	x	Factor 1.1320	=	Total 120.77			
49	06 41 13 00 0231		EA	33" Wide, 35" High x 23-3/4" Deep, Single Drawer and Double Door, Solid Wood Face Frame, Thermofoil Door and Drawer Front, Base Cabinet									$1,098.81
			Installation	Quantity 2.00	x	Unit Price 485.34	x	Factor 1.1320	=	Total 1,098.81			
				demolition of 1 kitchen and installation of 2 new kitchen cabinets per plans									
50	06 41 13 00 0231	0126		For Solid Wood Drawers, Dovetail Joints And Full Extension Drawer Guides, Add									$231.72
			Installation	Quantity 2.00	x	Unit Price 102.35	x	Factor 1.1320	=	Total 231.72			
51	06 41 13 00 0231	0130		For All Plywood Box Construction, Add									$241.55
			Installation	Quantity 2.00	x	Unit Price 106.69	x	Factor 1.1320	=	Total 241.55			
52	06 41 13 00 0232		EA	36" Wide, 35" High x 23-3/4" Deep, Single Drawer and Double Door, Solid Wood Face Frame, Thermofoil Door and Drawer Front, Base Cabinet									$1,133.00
			Installation	Quantity 2.00	x	Unit Price 500.44	x	Factor 1.1320	=	Total 1,133.00			
				demolition of 1 kitchen and installation of 2 new kitchen cabinets per plans									
53	06 41 13 00 0232	0126		For Solid Wood Drawers, Dovetail Joints And Full Extension Drawer Guides, Add									$231.72
			Installation	Quantity 2.00	x	Unit Price 102.35	x	Factor 1.1320	=	Total 231.72			
54	06 41 13 00 0232	0130		For All Plywood Box Construction, Add									$241.55
			Installation	Quantity 2.00	x	Unit Price 106.69	x	Factor 1.1320	=	Total 241.55			
55	06 41 13 00 0248		EA	15" Wide, 35" High x 23-3/4" Deep, Four Drawer Base, Solid Wood Face Frame and Thermofoil Drawer Fronts, Base Cabinet									$881.74
			Installation	Quantity 2.00	x	Unit Price 389.46	x	Factor 1.1320	=	Total 881.74			
				demolition of 1 kitchen and installation of 2 new kitchen cabinets per plans									

Work Order Number: 116757.00
Work Order Title: Fashion Park Unit 251 Conversion

Section - 06

56	06 41 13 00 0248	0129		For Solid Wood Drawers, Dovetail Joints And Full Extension Drawer Guides, Add									$926.86
			Installation	Quantity		Unit Price		Factor		Total			
				2.00	x	409.39	x	1.1320	=	926.86			
57	06 41 13 00 0248	0130		For All Plywood Box Construction, Add									$241.55
			Installation	Quantity		Unit Price		Factor		Total			
				2.00	x	106.69	x	1.1320	=	241.55			
58	06 41 13 00 0258		EA	33" Wide, 12" High x 12" Deep, Double Door, Solid Wood Face Frame and Thermofoil Doors, Wall Cabinet									$331.44
			Installation	Quantity		Unit Price		Factor		Total			
				1.00	x	292.79	x	1.1320	=	331.44			
				demolition of 1 kitchen and installation of 2 new kitchen cabinets per plans									
59	06 41 13 00 0258	0131		For All Plywood Box Construction, Add									$64.81
			Installation	Quantity		Unit Price		Factor		Total			
				1.00	x	57.25	x	1.1320	=	64.81			
60	06 41 13 00 0259		EA	36" Wide, 12" High x 12" Deep, Double Door, Solid Wood Face Frame and Thermofoil Doors, Wall Cabinet									$365.34
			Installation	Quantity		Unit Price		Factor		Total			
				1.00	x	322.74	x	1.1320	=	365.34			
				demolition of 1 kitchen and installation of 2 new kitchen cabinets per plans									
61	06 41 13 00 0259	0131		For All Plywood Box Construction, Add									$64.81
			Installation	Quantity		Unit Price		Factor		Total			
				1.00	x	57.25	x	1.1320	=	64.81			
62	06 41 13 00 0278		EA	30" Wide, 18" High x 12" Deep, Double Doors, Solid Wood Face Frame and Thermofoil Doors, Wall Cabinet									$722.69
			Installation	Quantity		Unit Price		Factor		Total			
				2.00	x	319.21	x	1.1320	=	722.69			
				demolition of 1 kitchen and installation of 2 new kitchen cabinets per plans									
63	06 41 13 00 0278	0131		For All Plywood Box Construction, Add									$129.61
			Installation	Quantity		Unit Price		Factor		Total			
				2.00	x	57.25	x	1.1320	=	129.61			
64	06 41 13 00 0282		EA	12" Wide, 30" High x 12" Deep, Single Door, Solid Wood Face Frame and Thermofoil Door, Wall Cabinet									$597.90
			Installation	Quantity		Unit Price		Factor		Total			
				2.00	x	264.09	x	1.1320	=	597.90			
				demolition of 1 kitchen and installation of 2 new kitchen cabinets per plans									
65	06 41 13 00 0282	0131		For All Plywood Box Construction, Add									$129.61
			Installation	Quantity		Unit Price		Factor		Total			
				2.00	x	57.25	x	1.1320	=	129.61			
66	06 41 13 00 0283		EA	15" Wide, 30" High x 12" Deep, Single Door, Solid Wood Face Frame and Thermofoil Door, Wall Cabinet									$325.62
			Installation	Quantity		Unit Price		Factor		Total			
				1.00	x	287.65	x	1.1320	=	325.62			
				demolition of 1 kitchen and installation of 2 new kitchen cabinets per plans									
67	06 41 13 00 0283	0131		For All Plywood Box Construction, Add									$64.81
			Installation	Quantity		Unit Price		Factor		Total			
				1.00	x	57.25	x	1.1320	=	64.81			
68	06 41 13 00 0283		EA	15" Wide, 30" High x 12" Deep, Single Door, Solid Wood Face Frame and Thermofoil Door, Wall Cabinet									$325.62
			Installation	Quantity		Unit Price		Factor		Total			
				1.00	x	287.65	x	1.1320	=	325.62			
				demolition of 1 kitchen and installation of 2 new kitchen cabinets per plans									

Contractor's Price Proposal - Detail Continues..

Work Order Number: 116757.00
Work Order Title: Fashion Park Unit 251 Conversion

Section - 06

69	06 41 13 00 0283	0131		For All Plywood Box Construction, Add								$64.81
			Installation	Quantity 1.00	x	Unit Price 57.25	x	Factor 1.1320	=	Total 64.81		
70	06 41 13 00 0284		EA	18" Wide, 30" High x 12" Deep, Single Door, Solid Wood Face Frame and Thermofoil Door, Wall Cabinet								$694.28
			Installation	Quantity 2.00	x	Unit Price 306.66	x	Factor 1.1320	=	Total 694.28		
				demolition of 1 kitchen and installation of 2 new kitchen cabinets per plans								
71	06 41 13 00 0284	0131		For All Plywood Box Construction, Add								$129.61
			Installation	Quantity 2.00	x	Unit Price 57.25	x	Factor 1.1320	=	Total 129.61		
72	06 41 13 00 0289		EA	33" Wide, 30" High x 12" Deep, Double Doors, Solid Wood Face Frame and Thermofoil Doors, Wall Cabinet								$974.72
			Installation	Quantity 2.00	x	Unit Price 430.53	x	Factor 1.1320	=	Total 974.72		
				demolition of 1 kitchen and installation of 2 new kitchen cabinets per plans								
73	06 41 13 00 0289	0131		For All Plywood Box Construction, Add								$129.61
			Installation	Quantity 2.00	x	Unit Price 57.25	x	Factor 1.1320	=	Total 129.61		
74	06 41 13 00 0329		EA	36" Wide, 84" High x 24" Deep, Four Doors, Solid Wood Face Frame and Thermofoil Doors, Pantry Cabinet								$1,462.41
			Installation	Quantity 1.00	x	Unit Price 1,291.88	x	Factor 1.1320	=	Total 1,462.41		
				demolition of 1 kitchen and installation of 2 new kitchen cabinets per plans								
75	06 41 13 00 0329	0132		For All Plywood Box Construction, Add								$239.58
			Installation	Quantity 1.00	x	Unit Price 211.64	x	Factor 1.1320	=	Total 239.58		
76	06 41 93 00 0007		EA	7" To 8-1/2", Flat Cabinet Pull Handle								$2,154.15
			Installation	Quantity 54.00	x	Unit Price 35.24	x	Factor 1.1320	=	Total 2,154.15		
				demolition of 1 kitchen and installation of 2 new kitchen cabinets per plans								

Subtotal for Section - 06 **$30,807.26**

Section - 07

77	07 21 16 00 0006		SF	5-1/2" Thick, Kraft Faced, R-21 Fiberglass Flexible Insulation								$19,505.18
			Installation	Quantity 8,284.00	x	Unit Price 1.72	x	Factor 1.1320	=	Total 16,129.28		
			Demolition	8,284.00	x	0.36	x	1.1320	=	3,375.90		
				removal of existing insulation and installation of new 6684 sqft of walls 1564 sqft of ceilings								
78	07 26 13 00 0010		CSF	Building Wrap (Tyvek)								$5,304.13
			Installation	Quantity 87.50	x	Unit Price 53.55	x	Factor 1.1320	=	Total 5,304.13		
				for new addition								
79	07 31 13 13 0004		SQ	230 LB/SQ, 5" Exposure, Three Tab Fiberglass Reinforced, Asphalt Composition Shingle (CertainTeed XT 30)								$7,409.79
			Installation	Quantity 25.00	x	Unit Price 261.83	x	Factor 1.1320	=	Total 7,409.79		
				new shingle roof for addition								

Contractor's Price Proposal - Detail Continues..

Work Order Number: 116757.00
Work Order Title: Fashion Park Unit 251 Conversion

Section - 07

80	07 34 00 00 0003		SQ	30 LB, Asphalt Saturated Organic Felt Roofing Underlayment, Mechanically Fastened									$1,416.70
			Installation	Quantity 25.00	x	Unit Price 50.06	x	Factor 1.1320	=	Total 1,416.70			
			new shingle roof for addition										
81	07 41 13 00 0026		LF	Eave Flashing For Aluminum Exposed Fastener Metal Roofing									$784.25
			Installation	Quantity 40.00	x	Unit Price 17.32	x	Factor 1.1320	=	Total 784.25			
			for new addition										
82	07 41 13 00 0026	0130		For Fluoropolymer (Kynar®) Coating, Add									$42.11
			Installation	Quantity 40.00	x	Unit Price 0.93	x	Factor 1.1320	=	Total 42.11			
83	07 62 13 00 0033		SF	22 Gauge, 0.034" Thick, Galvanized Steel Flashing									$4,149.91
			Installation	Quantity 300.00	x	Unit Price 12.22	x	Factor 1.1320	=	Total 4,149.91			
			flashing per plans for addition and 100 sqft for new windows										
84	07 62 13 00 0033	0080		For Wrap Around Window Panning, Add									$699.58
			Installation	Quantity 100.00	x	Unit Price 6.18	x	Factor 1.1320	=	Total 699.58			
85	07 71 23 00 0016		LF	6", 0.032" Thick, Box Style Aluminum Gutter									$429.88
			Installation	Quantity 25.00	x	Unit Price 15.19	x	Factor 1.1320	=	Total 429.88			
			rain gutter per plans										
86	07 71 23 00 0016	0322		For Up To 100', Add									$70.18
			Installation	Quantity 25.00	x	Unit Price 2.48	x	Factor 1.1320	=	Total 70.18			
87	07 71 23 00 0029		EA	6", Box Style Aluminum Gutter End Cap									$18.34
			Installation	Quantity 2.00	x	Unit Price 8.10	x	Factor 1.1320	=	Total 18.34			
			rain gutter per plans										
88	07 71 23 00 0055		LF	4" x 5", 0.019" Thick, Rectangular Aluminum Downspout									$102.67
			Installation	Quantity 10.00	x	Unit Price 9.07	x	Factor 1.1320	=	Total 102.67			
			rain gutter per plans										
89	07 71 23 00 0055	0325		For Up To 100', Add									$14.04
			Installation	Quantity 10.00	x	Unit Price 1.24	x	Factor 1.1320	=	Total 14.04			

Subtotal for Section - 07 **$39,946.76**

Section - 08

90	08 05 13 00 0041		EA	Factory Prepare Wood Door (Rated Or Non-Rated) For Mortise Lockset Hardware									$470.41
			Installation	Quantity 6.00	x	Unit Price 69.26	x	Factor 1.1320	=	Total 470.41			
			for all new doors. 1 front door, 2 bath, and 3 bedroom										

Work Order Number: 116757.00
Work Order Title: Fashion Park Unit 251 Conversion

Section - 08

91	08 14 16 00 0134	EA	3'-0" x 6'-8" x 1-3/4" Thick, 5 Ply, Hollow Core (HC), Birch Faced Wood Door									$2,910.85
				Quantity		Unit Price		Factor		Total		
			Installation	7.00	x	288.16	x	1.1320	=	2,283.38		
			Demolition	10.00	x	55.43	x	1.1320	=	627.47		
			Demo of 3 utility closet, 5 bedroom, and 2 bathroom doors. Installation of 2 utility closet, 3 bedroom, 2 bathroom doors.									
92	08 14 73 00 0074	EA	5' Wide, Two 2'-6" x 6'-8" x 1-3/8" Thick, Flush, Hollow Core (HC), Birch Faced Wood Bi-Pass Doors									$1,525.71
				Quantity		Unit Price		Factor		Total		
			Installation	3.00	x	396.94	x	1.1320	=	1,348.01		
			Demolition	2.00	x	78.49	x	1.1320	=	177.70		
			removal of 2 existing closet sliding doors, installation of 3 new closet sliding doors									
93	08 53 13 00 0549	EA	>110" To 120" UI, Horizontal Sliding Premium Vinyl Window (Pella 350)									$4,060.21
				Quantity		Unit Price		Factor		Total		
			Installation	5.00	x	631.42	x	1.1320	=	3,573.84		
			Demolition	6.00	x	71.61	x	1.1320	=	486.38		
			removal of 6 existing windows. Installation of 5 new windows per plans									
94	08 71 11 00 0004	PR	3-1/2" x 3-1/2" Standard Duty, Full Mortise, Plain Bearing, Brass/Bronze, Satin Chrome Finish Hinge									$652.61
				Quantity		Unit Price		Factor		Total		
			Installation	7.00	x	73.13	x	1.1320	=	579.48		
			Demolition	10.00	x	6.46	x	1.1320	=	73.13		
			Demo of 3 utility closet, 5 bedroom, and 2 bathroom doors. Installation of 2 utility closet, 3 bedroom, 2 bathroom doors.									
95	08 71 11 00 0005	PR	4" x 4" Standard Duty, Full Mortise, Plain Bearing, Brass/Bronze, Satin Chrome Finish Hinge									$136.35
				Quantity		Unit Price		Factor		Total		
			Installation	1.50	x	80.30	x	1.1320	=	136.35		
			for new front door per plans									
96	08 71 11 00 0513	EA	3" Projection, Residential Spring Type, Bright Brass Finish, Steel Wall Stop (Ives 63)									$130.43
				Quantity		Unit Price		Factor		Total		
			Installation	7.00	x	9.86	x	1.1320	=	78.13		
			Demolition	10.00	x	4.62	x	1.1320	=	52.30		
			per plans									
97	08 71 11 00 0655	EA	190 Degree Angle Of View, Bright Brass Finish, Brass One-Way Wide Angle Door Viewer (Ives U698)									$47.59
				Quantity		Unit Price		Factor		Total		
			Installation	1.00	x	42.04	x	1.1320	=	47.59		
			for new front door per plans									
98	08 71 11 00 2288	EA	Passage/Closet F01 Mortise LatchsetBoth sides always unlocked.									$1,471.62
				Quantity		Unit Price		Factor		Total		
			Installation	2.00	x	615.36	x	1.1320	=	1,393.18		
			Demolition	3.00	x	23.10	x	1.1320	=	78.45		
			Demo of 3 utility closet. Installation of 2 utility closet doors									
99	08 71 11 00 2289	EA	Bath/Bedroom Privacy F02/F19 Mortise LocksetLocked with thumb knob inside.									$4,323.67
				Quantity		Unit Price		Factor		Total		
			Installation	5.00	x	731.56	x	1.1320	=	4,140.63		
			Demolition	7.00	x	23.10	x	1.1320	=	183.04		
			Demo of 5 bedroom, and 2 bathroom doors. Installation of 3 bedroom, 2 bathroom doors.									

Contractor's Price Proposal - Detail Continues..

Work Order Number: 116757.00
Work Order Title: Fashion Park Unit 251 Conversion

Section - 08

100	08 71 11 00 2293		EA	Entrance F08 Mortise LocksetLocked with key outside and thumb knob inside.								$960.13
					Quantity		Unit Price		Factor		Total	
				Installation	1.00	x	848.17	x	1.1320	=	960.13	
				for new front door per plans								
101	08 71 11 00 2293	0263		For Satin Brass Clear Coat US4 (BHMA 606) Finish, Add								$42.78
					Quantity		Unit Price		Factor		Total	
				Installation	1.00	x	37.79	x	1.1320	=	42.78	
102	08 72 33 00 0155		LF	3/8" x 3/16", Silicon Compression Bulb, Adhesive Backed Perimeter Gasketing Weather-Strip (Pemko PK33)								$63.89
					Quantity		Unit Price		Factor		Total	
				Installation	17.00	x	3.32	x	1.1320	=	63.89	
				for new front door per plans								
103	08 72 43 00 0011		LF	6" Width, 1/4" Height, Aluminum Saddle Threshold (Pemko 272A)								$125.07
					Quantity		Unit Price		Factor		Total	
				Installation	3.00	x	36.83	x	1.1320	=	125.07	
				for new front door per plans								
104	08 72 43 00 0011	0458		For Color Anodized Finish, Add								$16.33
					Quantity		Unit Price		Factor		Total	
				Installation	3.00	x	4.81	x	1.1320	=	16.33	

Subtotal for Section - 08 **$16,937.65**

Section - 09

105	09 05 71 00 0002		SF	5 Mil Tile And Stone Acoustical Underlayment (EasyMat)								$6,391.32
					Quantity		Unit Price		Factor		Total	
				Installation	1,564.00	x	3.61	x	1.1320	=	6,391.32	
				acousthmat underlayment per plans FSI/A-602								
106	09 05 71 00 0005		SF	2 MM Thick Resilient Plank Floor Acoustical Underlayment (Floormuffler)								$2,637.97
					Quantity		Unit Price		Factor		Total	
				Installation	1,564.00	x	1.49	x	1.1320	=	2,637.97	
				closest LI to gypsum sanded floor underlayment per plans FSI/A-602								
107	09 22 13 23 0008		SF	25 Gauge, 16" On Center, Installed On Walls, Double-Leg Resilient Channel, RC2 Furring Channel								$2,604.73
					Quantity		Unit Price		Factor		Total	
				Installation	650.00	x	3.54	x	1.1320	=	2,604.73	
				Resilient channel per plans A-602								
108	09 22 13 23 0010		SF	25 Gauge, 16" On Center, Installed On Ceilings, Double-Leg Resilient Channel, RC2 Furring Channel								$7,418.18
					Quantity		Unit Price		Factor		Total	
				Installation	1,564.00	x	4.19	x	1.1320	=	7,418.18	
				Resilient channel per plans FSI/A-602								
109	09 22 36 23 0005		SF	3.4 LB/SY, Installed On Studs Or Furred Walls, Flat Diamond, Expanded Metal Lath								$3,022.16
					Quantity		Unit Price		Factor		Total	
				Installation	875.00	x	2.53	x	1.1320	=	2,505.97	
				Demolition	800.00	x	0.57	x	1.1320	=	516.19	
				removal of existing stucco and installation of new for new addition and new front entrance								

Work Order Number: 116757.00
Work Order Title: Fashion Park Unit 251 Conversion

Section - 09

110	09 24 23 00 0002		SF	Scratch/Brown/Finish, Three Coat Troweled StuccoExcludes lath and felt. Interior or exterior, one side.								$10,885.03
					Quantity		Unit Price		Factor		Total	
				Installation	875.00	x	8.53	x	1.1320	=	8,448.97	
				Demolition	800.00	x	2.69	x	1.1320	=	2,436.06	
				removal of existing stucco and installation of new for new addition and new front entrance								
111	09 24 23 00 0004		SF	Scratch/Finish, Two Coat Troweled StuccoExcludes lath and felt. Interior or exterior, one side.								$6,763.70
					Quantity		Unit Price		Factor		Total	
				Installation	875.00	x	5.64	x	1.1320	=	5,586.42	
				Demolition	800.00	x	1.30	x	1.1320	=	1,177.28	
				removal of existing stucco and installation of new for new addition and new front entrance								
112	09 24 23 00 0005		SF	Finish Coat Troweled StuccoExcludes lath and felt. Interior or exterior, one side.								$4,373.48
					Quantity		Unit Price		Factor		Total	
				Installation	875.00	x	3.62	x	1.1320	=	3,585.61	
				Demolition	800.00	x	0.87	x	1.1320	=	787.87	
				removal of existing stucco and installation of new for new addition and new front entrance								
113	09 29 10 00 0006		SF	5/8" Gypsum Board								$14,191.84
					Quantity		Unit Price		Factor		Total	
				Installation	8,248.00	x	1.52	x	1.1320	=	14,191.84	
				for walls and ceilings per plans								
114	09 29 10 00 0038		SF	Up To 10' High, Walls, Tape, Spackle And Finish Gypsum Board								$4,464.11
					Quantity		Unit Price		Factor		Total	
				Installation	6,684.00	x	0.59	x	1.1320	=	4,464.11	
				for walls								
115	09 29 10 00 0038	0048		For ASTM C840 Level 5 High Quality Finish, Add								$3,329.17
					Quantity		Unit Price		Factor		Total	
				Installation	6,684.00	x	0.44	x	1.1320	=	3,329.17	
116	09 29 10 00 0041		SF	Up To 10' High, Ceilings, Tape, Spackle And Finish Gypsum Board								$1,363.25
					Quantity		Unit Price		Factor		Total	
				Installation	1,564.00	x	0.77	x	1.1320	=	1,363.24	
				for ceilings								
117	09 29 10 00 0041	0048		For ASTM C840 Level 5 High Quality Finish, Add								$10,091.55
					Quantity		Unit Price		Factor		Total	
				Installation	15,640.00	x	0.57	x	1.1320	=	10,091.55	
118	09 29 10 00 0044		LF	Up To 10' High, Vertical Corners, Tape, Spackle And Finish Gypsum Board								$1,651.00
					Quantity		Unit Price		Factor		Total	
				Installation	1,236.00	x	1.18	x	1.1320	=	1,651.00	
				walls: 150 vertical corners @ 8' throughout both floors. windows: 36 LF of vertical corners								
119	09 29 10 00 0044	0048		For ASTM C840 Level 5 High Quality Finish, Add								$1,217.26
					Quantity		Unit Price		Factor		Total	
				Installation	1,236.00	x	0.87	x	1.1320	=	1,217.26	
120	09 29 10 00 0047		LF	Up To 10' High, Horizontal Corners, Tape, Spackle And Finish Gypsum Board								$1,209.66
					Quantity		Unit Price		Factor		Total	
				Installation	780.00	x	1.37	x	1.1320	=	1,209.66	
				750 LF of walls and 30 LF of windows								

Work Order Number: 116757.00
Work Order Title: Fashion Park Unit 251 Conversion

Section - 09

121	09 29 10 00 0047	0048		For ASTM C840 Level 5 High Quality Finish, Add									$891.79
			Installation	Quantity 780.00	x	Unit Price 1.01	x	Factor 1.1320	=	Total 891.79			
122	09 29 10 00 0051		LF	Corner Bead, Galvanized Steel For Gypsum Board									$7,508.15
			Installation	Quantity 2,016.00	x	Unit Price 3.29	x	Factor 1.1320	=	Total 7,508.15			
			walls: 150 vertical corners @ 8' throughout both floors. 750 LF of horizontal corners Windows: 86 LF										
123	09 65 13 13 0003		LF	4" High, 1/8" Thick, Type TV Thermoplastic Vinyl Wall Base, All Colors									$2,844.15
			Installation	Quantity 750.00	x	Unit Price 3.35	x	Factor 1.1320	=	Total 2,844.15			
			750 LF of walls										
124	09 65 23 00 0004		SF	0.16" Overall Thickness, 0.020" Wear Layer, Vinyl Plank Flooring (Armstrong® Luxe Plank™)									$16,907.78
			Installation	Quantity 1,564.00	x	Unit Price 9.55	x	Factor 1.1320	=	Total 16,907.78			
			new flooring throughout per plans										
125	09 91 13 00 0095		SF	1 Coat Primer, Brush/Roller Work, Paint Exterior Stucco Walls									$1,236.14
			Installation	Quantity 1,400.00	x	Unit Price 0.78	x	Factor 1.1320	=	Total 1,236.14			
			paint front and side of building for affected areas corner to corner										
126	09 91 13 00 0097		SF	2 Coats Paint, Brush/Roller Work, Paint Exterior Stucco Walls									$2,599.07
			Installation	Quantity 1,400.00	x	Unit Price 1.64	x	Factor 1.1320	=	Total 2,599.07			
			paint front and side of building for affected areas corner to corner										
127	09 91 23 00 0067		SF	1 Coat Primer, Brush/Roller Work, Paint Interior Plaster/Drywall Walls									$4,161.46
			Installation	Quantity 6,684.00	x	Unit Price 0.55	x	Factor 1.1320	=	Total 4,161.46			
			for walls										
128	09 91 23 00 0069		SF	2 Coats Paint, Brush/Roller Work, Paint Interior Plaster/Drywall Walls									$8,322.92
			Installation	Quantity 6,684.00	x	Unit Price 1.10	x	Factor 1.1320	=	Total 8,322.92			
			for walls										
129	09 91 23 00 0161		SF	1 Coat Primer, Brush/Roller Work, Paint Interior Drywall/Plaster Ceiling									$1,150.79
			Installation	Quantity 1,564.00	x	Unit Price 0.65	x	Factor 1.1320	=	Total 1,150.79			
			for ceilings										
130	09 91 23 00 0163		SF	2 Coats Paints, Brush/Roller Work, Paint Interior Drywall/Plaster Ceiling									$2,071.42
			Installation	Quantity 1,564.00	x	Unit Price 1.17	x	Factor 1.1320	=	Total 2,071.42			
			for ceilings										
131	09 91 23 00 0252		LF	1 Coat Primer, Brush/Roller Work, Paint Interior Wood Door Frame And Trim									$570.53
			Installation	Quantity 600.00	x	Unit Price 0.84	x	Factor 1.1320	=	Total 570.53			
			15 total doors. 40 LF of trim per door										
132	09 91 23 00 0254		LF	2 Coats Paint, Brush/Roller Work, Paint Interior Wood Door Frame And Trime									$1,249.73
			Installation	Quantity 600.00	x	Unit Price 1.84	x	Factor 1.1320	=	Total 1,249.73			
			15 total doors. 40 LF of trim per door										

Contractor's Price Proposal - Detail Continues..

Work Order Number: 116757.00
Work Order Title: Fashion Park Unit 251 Conversion

Section - 09

133	09 91 23 00 0275	EA	1 Coat Primer, Brush/Roller Work, Both Faces, Paint Interior Wood Door								$1,153.96
				Quantity		Unit Price		Factor		Total	
			Installation	15.00	x	67.96	x	1.1320	=	1,153.96	
			8 doors on first floor 7 doors on second floor								
134	09 91 23 00 0277	EA	2 Coats Paint, Brush/Roller Work, Both Faces, Paint Interior Wood Door								$2,072.58
				Quantity		Unit Price		Factor		Total	
			Installation	15.00	x	122.06	x	1.1320	=	2,072.58	
			8 doors on first floor 7 doors on second floor								
135	09 91 23 00 0307	LF	1 Coat Primer, Brush/Roller Work, Paint Interior Wood Window Frame And Trim								$163.73
				Quantity		Unit Price		Factor		Total	
			Installation	128.00	x	1.13	x	1.1320	=	163.73	
			8 windows with 128 LF of trim								
136	09 91 23 00 0309	LF	2 Coats Paint, Brush/Roller Work, Paint Interior Wood Window Frame And Trim								$357.89
				Quantity		Unit Price		Factor		Total	
			Installation	128.00	x	2.47	x	1.1320	=	357.89	
			8 windows with 128 LF of trim								
137	09 91 23 00 0350	LF	1 Coat Primer, Brush Work, Paint Interior Wood Trim To 6" Wide								$492.42
				Quantity		Unit Price		Factor		Total	
			Installation	750.00	x	0.58	x	1.1320	=	492.42	
			750 LF of baseboards								
138	09 91 23 00 0352	LF	2 Coats Paint, Paint Interior Wood Trim to 6" Wide								$1,120.68
				Quantity		Unit Price		Factor		Total	
			Installation	750.00	x	1.32	x	1.1320	=	1,120.68	
			750 LF of baseboards								

Subtotal for Section - 09 **$136,489.60**

Section - 10

139	10 28 13 13 0045	EA	Single Roll, Surface Mounted, Stainless Steel, Satin Finish, Toilet Tissue Dispenser (Bobrick B-6857)								$123.83
				Quantity		Unit Price		Factor		Total	
			Installation	1.00	x	88.61	x	1.1320	=	100.31	
			Demolition	1.00	x	20.78	x	1.1320	=	23.52	
			per plans								
140	10 28 13 13 0170	EA	36" Length, 1-1/2" Diameter, Stainless Steel Grab Bar (Bobrick B-6806x36)								$311.68
				Quantity		Unit Price		Factor		Total	
			Installation	3.00	x	91.78	x	1.1320	=	311.68	
			per plans								
141	10 28 13 13 0171	EA	42" Length, 1-1/2" Diameter, Stainless Steel Grab Bar (Bobrick B-6806x42)								$106.14
				Quantity		Unit Price		Factor		Total	
			Installation	1.00	x	93.76	x	1.1320	=	106.14	
			per plans								
142	10 28 13 13 0217	EA	Telescoping 60" To 72" Length, 20-Gauge, 1" Diameter, Stainless Steel Curved Shower Rod With Concealed Mounting (Kohler Expanse K-9349)								$158.19
				Quantity		Unit Price		Factor		Total	
			Installation	1.00	x	118.96	x	1.1320	=	134.66	
			Demolition	1.00	x	20.78	x	1.1320	=	23.52	
			per plans								

Contractor's Price Proposal - Detail Continues..

Work Order Number: 116757.00
Work Order Title: Fashion Park Unit 251 Conversion

Section - 10

143	10 28 13 13 0322	EA	24" Length, 3/4" Diameter, Stainless Steel Towel Bar (Bobrick B-674)									$133.36
				Quantity		Unit Price		Factor		Total		
			Installation	1.00	x	97.03	x	1.1320	=	109.84		
			Demolition	1.00	x	20.78	x	1.1320	=	23.52		
			per plans									
144	10 28 13 13 0390	EA	20" x 26", Surface Mounted, Aluminum Medicine Cabinet (Kohler K-CB)									$817.76
				Quantity		Unit Price		Factor		Total		
			Installation	1.00	x	676.23	x	1.1320	=	765.49		
			Demolition	1.00	x	46.17	x	1.1320	=	52.26		
			per plans									

Subtotal for Section - 10 **$1,650.96**

Section - 11

145	11 30 13 13 0010	EA	30" Gas Range With Oven									$2,325.17
				Quantity		Unit Price		Factor		Total		
			Installation	2.00	x	985.73	x	1.1320	=	2,231.69		
			Demolition	1.00	x	82.58	x	1.1320	=	93.48		
			remove and save existing for clients attic stock. Installation of 2 new.									
146	11 30 13 13 0015	EA	30" Venting Range Hood (Broan 40000)									$619.32
				Quantity		Unit Price		Factor		Total		
			Installation	2.00	x	242.58	x	1.1320	=	549.20		
			Demolition	1.00	x	61.94	x	1.1320	=	70.12		
			removal of existing and installation of 2 new									
147	11 30 13 13 0048	EA	>16 To 18 CF Top Freezer Refrigerator									$2,550.65
				Quantity		Unit Price		Factor		Total		
			Installation	2.00	x	1,105.96	x	1.1320	=	2,503.89		
			Demolition	1.00	x	41.30	x	1.1320	=	46.75		
			remove and save existing for clients attic stock. Installation of 2 new.									
148	11 30 13 13 0084	EA	1/3 HP Insulated Garbage Disposal (GE GFC320V)									$636.07
				Quantity		Unit Price		Factor		Total		
			Installation	2.00	x	249.98	x	1.1320	=	565.95		
			Demolition	1.00	x	61.94	x	1.1320	=	70.12		
			removal o existing and installation of new									

Subtotal for Section - 11 **$6,131.21**

Section - 12

149	12 36 61 19 0005	SF	1-1/4" Thick, Quartz Agglomerate Countertop With Backsplash									$6,914.26
				Quantity		Unit Price		Factor		Total		
			Installation	50.00	x	122.16	x	1.1320	=	6,914.26		
			25 LF of kitchen countertops									
150	12 36 61 19 0007	EA	Cutout For Sink And/Or Faucet In Quartz Agglomerate Countertop									$313.61
				Quantity		Unit Price		Factor		Total		
			Installation	2.00	x	138.52	x	1.1320	=	313.61		
			2 kitchen sinks									

Subtotal for Section - 12 **$7,227.87**

Section - 22

Work Order Number: 116757.00
Work Order Title: Fashion Park Unit 251 Conversion

Section - 22

151	22 01 40 81 0004	EA	Removal And Replacement Of Chrome Supply Lines To Sink/Lavatory, Pair								$297.60
				Quantity		Unit Price		Factor		Total	
			Installation	10.00	x	26.29	x	1.1320	=	297.60	
			replace supply lines in kitchens and bathrooms								
152	22 01 40 81 0006	EA	Removal And Replacement Of Double Bowl Sink/Lavatory Drain Line								$128.73
				Quantity		Unit Price		Factor		Total	
			Installation	2.00	x	56.86	x	1.1320	=	128.73	
			new drain lines								
153	22 11 16 00 0003	LF	3/4" Schedule 40 Threaded Galvanized Steel Pipe With 150 LB Malleable Iron Fitting AssemblyIncludes all hangers and all galvanized malleable iron fittings (couplings, elbows, tees and reducer fittings). All hangers are complete assemblies. Not for use where detail is available.								$7,127.07
				Quantity		Unit Price		Factor		Total	
			Installation	300.00	x	18.30	x	1.1320	=	6,214.68	
			Demolition	200.00	x	4.03	x	1.1320	=	912.39	
			gas line piping								
154	22 11 16 00 0901	LF	3/4" Inside Diameter Copper Pipe/Tubing Type L AssemblyIncludes all hangers and couplings, elbow, tee, reducer fittings. All hangers are complete assemblies. Not for use where detail is available.								$19,234.38
				Quantity		Unit Price		Factor		Total	
			Installation	650.00	x	24.17	x	1.1320	=	17,784.29	
			Demolition	350.00	x	3.66	x	1.1320	=	1,450.09	
			water line copper piping								
155	22 12 23 13 0002	EA	80 Gallon ASME Rated Tank, 150PSI, Jacketed, Insulated, Glass Lined Water Heater Storage Tank (TJ-80A)								$424.28
				Quantity		Unit Price		Factor		Total	
			Installation	0.00	x	2,141.02	x	1.1320	=	0.00	
			Demolition	1.00	x	374.81	x	1.1320	=	424.28	
			removal of existing water heater								
156	22 13 16 00 0509	LF	4" Schedule 40 Polyvinyl Chloride (PVC) DWV Pipe AssemblyIncludes all fittings, couplings and hangers. Fittings are assumed every 10'. Not for use where detail is available.								$20,147.62
				Quantity		Unit Price		Factor		Total	
			Installation	400.00	x	39.47	x	1.1320	=	17,872.02	
			Demolition	275.00	x	7.31	x	1.1320	=	2,275.60	
			Sewer and vent piping								
157	22 34 13 00 0011	EA	7.4 GPM, Outdoor Mount, Instantaneous, Tankless, Gas Domestic Water Heater (Rheem RTG-74XN)								$5,196.24
				Quantity		Unit Price		Factor		Total	
			Installation	2.00	x	2,295.16	x	1.1320	=	5,196.24	
			installation of 2 new water heaters								
158	22 41 16 16 0003	EA	33" x 21" x 6-1/2" Stainless Steel Kitchen Sink, Double Bowl, 20 Gauge (Elkay D233213)								$1,488.27
				Quantity		Unit Price		Factor		Total	
			Installation	2.00	x	607.23	x	1.1320	=	1,374.77	
			Demolition	1.00	x	100.27	x	1.1320	=	113.51	
			removal of existing and installation of new.								
159	22 41 39 00 0006	EA	Chrome Two Handle Kitchen Faucet With Spray, Three Hole Installation, 8" Center (Delta 2402LF-LHP+H215)								$454.33
				Quantity		Unit Price		Factor		Total	
			Installation	2.00	x	177.25	x	1.1320	=	401.29	
			Demolition	1.00	x	46.85	x	1.1320	=	53.03	
			removal of existing and installation of new.								

Contractor's Price Proposal - Detail Continues..

Work Order Number: 116757.00
Work Order Title: Fashion Park Unit 251 Conversion

Section - 22

160	22 42 13 13 0027	EA	2 Piece Tank Type, Pressure Assisted, Siphon Jet, Floor Mounted, Back Outlet, Handicap Accessible, Elongated Vitreous China Water Closet (American Standard Yorkville™ ADA)								$1,300.36
				Quantity		Unit Price		Factor		Total	
			Installation	1.00	x	1,051.28	x	1.1320	=	1,190.05	
			Demolition	1.00	x	97.45	x	1.1320	=	110.31	
			remove existing and install new ADA toilet								
161	22 42 16 13 0009	EA	27" x 20" Wheelchair Accessible, Vitreous China Wall Hung Lavatory (American Standard Wheel Chair Users)								$776.98
				Quantity		Unit Price		Factor		Total	
			Installation	1.00	x	623.60	x	1.1320	=	705.92	
			Demolition	1.00	x	62.78	x	1.1320	=	71.07	
			remove existing and install new ADA sink, faucet, and drain cover.								
162	22 42 19 00 0027	EA	3 Piece Tub/Shower Surrounds, 32" x 72" Side Walls, 48" x 72" Back, (Swanstone SK-324872)								$3,166.32
				Quantity		Unit Price		Factor		Total	
			Installation	1.00	x	2,797.10	x	1.1320	=	3,166.32	
			new tub/shower for ADA bathroom								
163	22 42 39 00 0042	EA	Single Supply EcoPower® Faucet, Polished Chrome Finish (Toto TEL3LS10#CP)								$709.36
				Quantity		Unit Price		Factor		Total	
			Installation	1.00	x	626.64	x	1.1320	=	709.36	
			ADA sink, faucet, and drain cover.								
164	22 42 39 00 0064	EA	Three Lever Handle, Chrome Shower And Tub Filler (American Standard Colony Soft 3375.502)								$293.63
				Quantity		Unit Price		Factor		Total	
			Installation	1.00	x	218.72	x	1.1320	=	247.59	
			Demolition	1.00	x	40.67	x	1.1320	=	46.04	
			per plans								
165	22 42 39 00 0210	EA	Lavatory Protective Enclosure (IPS Truebro Lav Shield)								$350.49
				Quantity		Unit Price		Factor		Total	
			Installation	2.00	x	154.81	x	1.1320	=	350.49	
			drain cover for ADA kitchen and bathroom sink								
166	22 42 39 00 0217	EA	1/2" NPT x 3/8" Compression Chrome, Quarter Turn Dual Angle Stop (SharkBite 25558)								$555.72
				Quantity		Unit Price		Factor		Total	
			Installation	10.00	x	41.22	x	1.1320	=	466.61	
			Demolition	8.00	x	9.84	x	1.1320	=	89.11	
			new angle stops installed in bathrooms and kitchens								

Subtotal for Section - 22 **$61,651.38**

Section - 23

167	23 05 93 00 0017	EA	Balancing HVAC Duct System, Floor Height Supply, Return, Exhaust, Register And Diffuser								$61.88
				Quantity		Unit Price		Factor		Total	
			Installation	1.00	x	54.66	x	1.1320	=	61.88	
			required setup, balancing, and charging for new system								
168	23 09 23 53 0284	EA	Scheduling Program, HVAC (AHU, RTU, AC Units, Etcetera) Programming Measures								$3,880.60
				Quantity		Unit Price		Factor		Total	
			Installation	1.00	x	3,428.09	x	1.1320	=	3,880.60	
			required setup, balancing, and charging for new system								

Work Order Number: 116757.00
Work Order Title: Fashion Park Unit 251 Conversion

Section - 23

169	23 31 13 16 0063	EA	4" Diameter, 26 Gauge, 2" WG And Less (Class C), Galvanized Sheet Metal Round And Flat-Oval Connector									$240.41
				Quantity		Unit Price		Factor		Total		
			Installation	14.00	x	15.17	x	1.1320	=	240.41		
			exhaust ducting for dyer per plans									
170	23 33 13 13 0006	EA	12" Diameter Radial Opposed Blade Damper Round, Steel Construction, Manual Operated									$140.78
				Quantity		Unit Price		Factor		Total		
			Installation	1.00	x	113.45	x	1.1320	=	128.43		
			Demolition	1.00	x	10.91	x	1.1320	=	12.35		
			HVAC per plans									
171	23 33 46 00 0008	LF	12" Diameter Flexible Duct, R8.0 Insulated With Polyester Inner Liner And Metallized Outer Jacket									$2,231.74
				Quantity		Unit Price		Factor		Total		
			Installation	100.00	x	15.36	x	1.1320	=	1,738.75		
			Demolition	130.00	x	3.35	x	1.1320	=	492.99		
			HVAC per plans									
172	23 33 46 00 0020	EA	12" Diameter Flexible Duct Collar, Spin In Type, Sheet Metal, With Damper									$100.97
				Quantity		Unit Price		Factor		Total		
			Installation	1.00	x	76.62	x	1.1320	=	86.73		
			Demolition	1.00	x	12.58	x	1.1320	=	14.24		
			HVAC per plans									
173	23 34 16 00 0127	EA	30" Diameter Wheel, 2 HP, 10,192 CFM At 1/4" Static Pressure, Belt Drive, Kitchen Upblast Exhaust Fan115/208-230/60/3. Includes heat baffle, grease baffle and disconnect switch.									$9,622.60
				Quantity		Unit Price		Factor		Total		
			Installation	2.00	x	4,153.39	x	1.1320	=	9,403.27		
			Demolition	1.00	x	193.75	x	1.1320	=	219.33		
			removal of one existing and installation of 2 new									
174	23 34 16 00 0275	EA	109 CFM, Ceiling/Wall Mounted, Metal Intake Grille, Heavy Duty/Continuous Operation Exhaust Fan (Broan® LoSone® Ventilator L100MG)									$897.54
				Quantity		Unit Price		Factor		Total		
			Installation	2.00	x	379.30	x	1.1320	=	858.74		
			Demolition	1.00	x	34.28	x	1.1320	=	38.80		
			exhaust fan per plans EF-1									
175	23 37 13 13 0080	EA	20" x 20" Single Deflection Return/Exhaust Register, Aluminum, Opposed Blade Damper, Wall/Ceiling									$319.70
				Quantity		Unit Price		Factor		Total		
			Installation	1.00	x	265.64	x	1.1320	=	300.70		
			Demolition	1.00	x	16.78	x	1.1320	=	18.99		
			HVAC per plans									
176	23 37 13 13 0225	EA	18" x 8" 4-Way Adjustable Wall Supply Grille, Adjustable Deflection, Aluminum Construction									$2,395.67
				Quantity		Unit Price		Factor		Total		
			Installation	7.00	x	275.90	x	1.1320	=	2,186.23		
			Demolition	11.00	x	16.82	x	1.1320	=	209.44		
			HVAC per plans									
177	23 54 16 13 0007	EA	120 MBH, 2,000 CFM Up/Horizontal Flow Multi-Speed, Two Stage 96% AFUE Gas FurnaceBlower cooling capacity up to 5 tons.									$5,879.99
				Quantity		Unit Price		Factor		Total		
			Installation	2.00	x	2,597.17	x	1.1320	=	5,879.99		
			per plans. SH-1 and SH-2 wall mounted furnaces									

Work Order Number: 116757.00
Work Order Title: Fashion Park Unit 251 Conversion

Section - 23

178	23 81 49 00 0020	EA	7-1/2 Ton Indoor Section Split Heat Pump Packaged Unit, Horizontal Upflow With 10 KW Electric Heat									$4,932.97
				Quantity		Unit Price		Factor		Total		
			Installation	1.00	x	4,047.74	x	1.1320	=	4,582.04		
			Demolition	1.00	x	310.01	x	1.1320	=	350.93		
			new furnace per clients request									

Subtotal for Section - 23 **$30,704.85**

Section - 26

179	26 01 20 91 0002	EA	Lock Out/Tag Out Local DisconnectExcludes tag or padlock See CSI section 26 01 20 91-0004 for padlock, 26 01 20 91-0005 for tag(s).									$523.83
				Quantity		Unit Price		Factor		Total		
			Installation	15.00	x	30.85	x	1.1320	=	523.83		
			LOTO of existing circuits									
180	26 05 19 16 0402	MLF	#12 AWG, 3 Conductors, 600 Volt, Type NM, Copper, Non-Metallic Sheathed Cable									$12,214.42
				Quantity		Unit Price		Factor		Total		
			Installation	4.00	x	2,697.53	x	1.1320	=	12,214.42		
			for new electrical runs per plans									
181	26 05 19 16 0402	0377	For Installation In Wood Stud Wall (Includes Drilling), Add									$1,272.82
				Quantity		Unit Price		Factor		Total		
			Installation	4.00	x	281.10	x	1.1320	=	1,272.82		
182	26 09 23 00 0109	EA	Wall Switch Replacement Occupancy Sensor, Single GangIncludes integral occupancy sensor and relay.									$1,204.00
				Quantity		Unit Price		Factor		Total		
			Installation	10.00	x	106.36	x	1.1320	=	1,204.00		
			per plans									
183	26 09 23 00 0235	EA	Passive Infrared, Wall Switch Mounted, Wired Occupancy Sensor (Encelium PW-100-24)Excludes GB II cable.									$586.31
				Quantity		Unit Price		Factor		Total		
			Installation	2.00	x	258.97	x	1.1320	=	586.31		
			for bathrooms									
184	26 24 13 00 0213	EA	800 Amperes, 480 Volt, 4 Wire, Switchboard Incoming No Switch Circuit									$5,781.11
				Quantity		Unit Price		Factor		Total		
			Installation	1.00	x	4,332.49	x	1.1320	=	4,904.38		
			Demolition	1.00	x	774.50	x	1.1320	=	876.73		
			for new main panel to new units subpanels									
185	26 24 16 00 0470	EA	200 Ampere Rating, Main Breaker, Indoor, 42 Circuit, 4 Wire, 120/208 Volt, Assembled Panelboard With 20 Ampere, 1 Pole Plug-In Breakers									$7,931.90
				Quantity		Unit Price		Factor		Total		
			Installation	2.00	x	3,075.97	x	1.1320	=	6,964.00		
			Demolition	1.00	x	855.04	x	1.1320	=	967.91		
			1 new sub panel for each unit									
186	26 27 13 00 0125	EA	Single Phase M-90 Meter, Socket, NEMA 3R Enclosure									$6,442.28
				Quantity		Unit Price		Factor		Total		
			Installation	6.00	x	905.76	x	1.1320	=	6,151.92		
			Demolition	5.00	x	51.30	x	1.1320	=	290.36		
			installation of new meters for building									
187	26 27 26 00 0009	EA	20 Amperes, 1 Gang, GFI, Duplex Receptacle Assembly									$3,825.42
				Quantity		Unit Price		Factor		Total		
			Installation	30.00	x	96.40	x	1.1320	=	3,273.74		
			Demolition	15.00	x	32.49	x	1.1320	=	551.68		
			All new GFI outlets throughout per clients request									

Contractor's Price Proposal - Detail Continues..

Work Order Number: 116757.00
Work Order Title: Fashion Park Unit 251 Conversion

Section - 26

188	26 27 26 00 0125		EA	20 Amperes, 125 Volt Single Specification Grade Tamper Resistant ReceptaclePass & Seymour TR5351.									$1,944.32
					Quantity		Unit Price		Factor		Total		
				Installation	40.00	x	34.39	x	1.1320	=	1,557.18		
				Demolition	40.00	x	8.55	x	1.1320	=	387.14		
				all new outlets throughout per clients request									
189	26 27 26 00 0138		EA	1 Gang, 20 Amperes, 120/277 Volt, SPST, Switch Assembly									$3,327.23
					Quantity		Unit Price		Factor		Total		
				Installation	25.00	x	85.08	x	1.1320	=	2,407.76		
				Demolition	25.00	x	32.49	x	1.1320	=	919.47		
				25 switches total in both units									
190	26 51 19 00 0312		EA	8" Diameter, 1,200 Lumens, Recessed LED Downlight With Open Trim (Lithonia DOM8 LED)									$7,780.09
					Quantity		Unit Price		Factor		Total		
				Installation	19.00	x	324.11	x	1.1320	=	6,970.96		
				Demolition	19.00	x	37.62	x	1.1320	=	809.13		
				19 new slim LED lights per plans and owners request									
191	26 51 19 00 0312	0543	EA	For Dimming Driver And Sensor Switch nLight Dimming Relay, Add									$1,339.77
					Quantity		Unit Price		Factor		Total		
				Installation	17.00	x	69.62	x	1.1320	=	1,339.77		
192	26 51 19 00 0430		EA	5" Shallow, Insulated Ceiling, Air-Tite New Construction (Cooper Halo H25ICAT)									$314.84
					Quantity		Unit Price		Factor		Total		
				Installation	3.00	x	92.71	x	1.1320	=	314.84		
				3 new 5" slim LED lights per plans									
193	26 51 19 00 0470		EA	2-1/2" Diameter x 15-1/2" High, Polished Nickel, LED Wall Sconce (Hudson Valley Lighting SHAW 1200-PN)									$1,017.22
					Quantity		Unit Price		Factor		Total		
				Installation	2.00	x	415.10	x	1.1320	=	939.79		
				Demolition	2.00	x	34.20	x	1.1320	=	77.43		
				2 new wall sconces per plans in bathrooms									
194	26 56 19 00 0031		EA	9,503 Lumens, 77 Watt, 3 LEDs, Wall Mounted Security Fixture (Jarvis Corp WMFT-350)									$1,530.14
					Quantity		Unit Price		Factor		Total		
				Installation	3.00	x	388.10	x	1.1320	=	1,317.99		
				Demolition	3.00	x	62.47	x	1.1320	=	212.15		
				replace 3 existing exterior lights per clients request									

Subtotal for Section - 26 **$57,035.70**

Section - 31

195	31 05 16 00 0002		CY	#2 Stone Aggregate Fill (1-1/2" To 2-1/2" Clean)									$1,295.01
					Quantity		Unit Price		Factor		Total		
				Installation	25.00	x	45.76	x	1.1320	=	1,295.01		
				4" deep, 200 LF, 2' wide base for backfill for trenching. 20 CY for footings, and slabs									
196	31 05 16 00 0002	0053		For Up To 8, Add									$51.79
					Quantity		Unit Price		Factor		Total		
				Installation	5.00	x	9.15	x	1.1320	=	51.79		
197	31 11 00 00 0008		ACR	Clearing By Machine - Light Brush Without Grub									$174.72
					Quantity		Unit Price		Factor		Total		
				Installation	0.50	x	308.69	x	1.1320	=	174.72		
				clear out weeds in back yard									

Contractor's Price Proposal - Detail Continues..

Work Order Number: 116757.00
Work Order Title: Fashion Park Unit 251 Conversion

Section - 31

198	31 11 00 00 0017	CY	Hand Loading Of Cleared And Grubbed Material									$849.91
				Quantity		Unit Price		Factor		Total		
			Installation	20.00	x	37.54	x	1.1320	=	849.91		
			clear out weeds in back yard									
199	31 23 16 13 0007	CY	Excavation For Trenching By Hand In SoilIncludes stockpiling excess materials and trimming sides and bottom of trench.									$3,505.24
				Quantity		Unit Price		Factor		Total		
			Installation	25.00	x	123.86	x	1.1320	=	3,505.24		
			20" deep, 200 LF, 2' wide									
200	31 23 16 13 0011	CY	Backfilling or Placing Subbase for Trenches with Imported or Stockpiled Materials by Hand									$973.80
				Quantity		Unit Price		Factor		Total		
			Installation	25.00	x	34.41	x	1.1320	=	973.80		
			20" deep, 200 LF, 2' wide									
201	31 23 16 13 0014	CY	Compaction of Fill or Subbase for Trenches by Hand									$1,098.61
				Quantity		Unit Price		Factor		Total		
			Installation	25.00	x	38.82	x	1.1320	=	1,098.61		
			20" deep, 200 LF, 2' wide									
202	31 23 16 36 0009	CY	Excavation For Building Foundations And Other Structures By Hand in Soil									$6,309.43
				Quantity		Unit Price		Factor		Total		
			Installation	45.00	x	123.86	x	1.1320	=	6,309.43		
			for footings and slab									
203	31 23 16 36 0019	CY	Backfilling Around Building Foundations And Other Structures By Hand									$1,335.53
				Quantity		Unit Price		Factor		Total		
			Installation	20.00	x	58.99	x	1.1320	=	1,335.53		
			for footings and slab									
204	31 23 16 36 0022	CY	Compaction Of Fill Or Subbase For Building Foundations and Other Structures by Hand									$1,976.98
				Quantity		Unit Price		Factor		Total		
			Installation	45.00	x	38.81	x	1.1320	=	1,976.98		
			for footings and slab									

Subtotal for Section - 31 **$17,571.02**

Section - 32

205	32 16 13 13 0016	LF	6" x 12" Cast In Place Concrete Gutter With 6" Curb And Face - Straight									$609.07
				Quantity		Unit Price		Factor		Total		
			Installation	15.00	x	24.92	x	1.1320	=	423.14		
			Demolition	15.00	x	10.95	x	1.1320	=	185.93		
			for parking lot ADA modifications									
206	32 16 23 00 0002	SF	4" Cast In Place Concrete Sidewalk									$586.15
				Quantity		Unit Price		Factor		Total		
			Installation	60.00	x	8.63	x	1.1320	=	586.15		
			for parking lot ADA modifications									
207	32 16 23 00 0002 0094		For Up To 100, Add									$248.59
				Quantity		Unit Price		Factor		Total		
			Installation	60.00	x	3.66	x	1.1320	=	248.59		
208	32 16 23 00 0008	EA	Finish Concrete Handicap Drop Section In SidewalkExcludes patterned (tactile) finish.									$145.65
				Quantity		Unit Price		Factor		Total		
			Installation	1.00	x	128.67	x	1.1320	=	145.65		
			for parking lot ADA modifications									

Contractor's Price Proposal - Detail Continues..

Work Order Number: 116757.00
Work Order Title: Fashion Park Unit 251 Conversion

Section - 32

209	32 17 23 13 0074	SF	Solid Area, Painted Pavement Marking For Parking AreasUse task for lines >12" wide, stop bars, transverse lines, diagonal lines, crossing lanes, etc.									$281.82
				Quantity		Unit Price		Factor		Total		
			Installation	64.00	x	3.89	x	1.1320	=	281.82		
			for parking lot ADA modifications									
210	32 17 23 13 0088	EA	Handicap Symbol For Van Parking Stalls, Painted Pavement Marking For Parking AreasApproximate overall dimensions: 4-1/3' width x 5' height. White or blue symbol. Excludes striping.									$86.15
				Quantity		Unit Price		Factor		Total		
			Installation	2.00	x	38.05	x	1.1320	=	86.15		
			for parking lot ADA modifications									
211	32 17 26 00 0003	SF	Embedded, VPC Truncated Dome Detectable Warning SurfaceAlso raised strips or directional bars. All colors.									$832.25
				Quantity		Unit Price		Factor		Total		
			Installation	16.00	x	45.95	x	1.1320	=	832.25		
			new truncated domes per A-501									
212	32 31 23 00 0006	LF	6' High Privacy Tongue And Groove Vinyl Fence									$3,593.82
				Quantity		Unit Price		Factor		Total		
			Installation	45.00	x	63.16	x	1.1320	=	3,217.37		
			Demolition	45.00	x	7.39	x	1.1320	=	376.45		
			removal of existing vinyl fence and installation of new due to ADA width requirements . includes a 4' wide ADA gate									
213	32 31 23 00 0051	EA	6' High x 4' Wide Vinyl Gate For Privacy Or Semi-Privacy Fence And Hinge Set									$757.38
				Quantity		Unit Price		Factor		Total		
			Installation	1.00	x	611.32	x	1.1320	=	692.01		
			Demolition	1.00	x	57.74	x	1.1320	=	65.36		
			removal of existing vinyl fence and installation of new due to ADA width requirements . includes a 4' wide ADA gate									
214	32 31 23 00 0078	EA	Stainless Steel Latch Set									$124.46
				Quantity		Unit Price		Factor		Total		
			Installation	1.00	x	109.95	x	1.1320	=	124.46		
			removal of existing vinyl fence and installation of new due to ADA width requirements . includes a 4' wide ADA gate									

Subtotal for Section - 32 **$7,265.34**

Proposal Total **$610,749.96**

This total represents the correct total for the proposal. Any discrepancy between line totals, sub-totals and the proposal total is due to rounding.

The Percentage of NPP on this Proposal: **%**

GORDIAN®

Subcontractor Listing

Date: June 06, 2023

Re:

IQC Master Contract #:	CA-R7-GB06-123021-MDJ
Work Order #:	116757.00
Owner PO #:	
Title:	Fashion Park Unit 251 Conversion
Contractor:	MDJ Management
Proposal Value:	$610,749.96

Name of Contractor	Duties	Amount	%
Janus Corporation		$100,000.00	16.37
Refined Construction		$450,000.00	73.68

EXHIBIT A

GORDIAN®

Work Order Signature Document

EZIQC Contract No.: CA-R7-GB06-123021-MDJ

[X] **New Work Order** [ ] **Modify an Existing Work Order**

Work Order Number.:	116758.00	Work Order Date:	06/06/2023
Work Order Title:	Fashion Park Unit 257 Conversion		
Owner Name:	Oxnard Housing Authority	Contractor Name:	MDJ Management
Contact:	Fredi Contreras	Contact:	Matt McMillon
Phone:	805-890-8319	Phone:	310-490-1521

Work to be Performed

Work to be performed as per the Final Detailed Scope of Work Attached and as per the terms and conditions of Sourcewell EZIQC Contract No CA-R7-GB06-123021-MDJ.

Brief Work Order Description:

Time of Performance Estimated Start Date:

Estimated Completion Date:

Liquidated Damages Will apply: [ ] Will not apply: [X]

Work Order Firm Fixed Price: $610,749.96

Owner Purchase Order Number:

Approvals

Oxnard Housing Authority Date

Concord Unit 2950 Conversion Date

Detailed Scope of Work

To: Matt McMillon
MDJ Management
531 Main St #611
El Segundo, CA 90245
310-490-1521

From: Fredi Contreras
Oxnard Housing Authority
300 N. Marquita Street
Oxnard, CA 93030
805-890-8319

Date Printed: June 06, 2023

Work Order Number: 116758.00

Work Order Title: Fashion Park Unit 257 Conversion

Brief Scope:

☐ **Preliminary** ☐ **Revised** ☒ **Final**

The following items detail the scope of work as discussed at the site. All requirements necessary to accomplish the items set forth below shall be considered part of this scope of work.

See attached

Subject to the terms and conditions of ezIQC Contract **CA-R7-GB06-123021-MDJ**.

Concord Unit 2950 Conversion _____ Date _____

Oxnard Housing Authority _____ Date _____

MDJ Management, LLC
License # 1044711
DIR # 1000061313
531 Main St. #611 El Segundo CA 90245
310-490-1521

Job Name: 257 Fashion Park ADA Conversion
Location: 257 Fashion Park Oxnard, CA 93036
Customer: Oxnard Housing Authority

Submission Date: 5/31/23

Detailed Scope of Work

Demolition

- Demolition of existing apartment per plans
- Per Asbestos Survey report provided by client all walls, ceilings and floors to be considered ACM
    - Demolition of unit to be performed by certified hazardous material demolition company

Installation/Buildout

- Saw cutting of slab and demolition of concrete for new plumbing
- Excavation for new plumbing and new concrete footings for addition
- All framing throughout including new walls and soffits
- New rough and finish plumbing throughout
- New electrical rough including new panel per plan
- Concrete work:
    - Pour new footings for addition
    - Pour back all open trenches inside the unit
    - Pour slab for addition
    - Our sidewalk as required
- New windows and doors
- New Insulation
- HVAC ductwork, registers, and wall heaters.
    - Includes new forced air unit
- Drywall throughout
- Lath, stucco, and color coat to match existing
- Roofing, fascia, and gutters for new addition
- Interior paint
- New Flooring and base
- New kitchens, countertops, fixtures, sinks and appliances.

- New bathroom fixtures per plan
- Paint exterior of building
- Site work:
    - New sidewalks
    - Handicap ramp with truncated domes
    - Handicap striping
    - New signage at Handicap stall

Installation/Buildout added by Client NOT included on plans

- Remove and replace all outlets and switches throughout, even on all existing walls
- Remove and replace exterior lighting with LED lighting
    - Match existing 3 fixtures
- Install MDF baseboards
    - Instead of called out cove base
- Remove and replace all interior doors. Complete list of doors from plans as well as clients request:
    - Demo of 3 utility closet, 2 sliding closet, 5 bedroom, and 2 bathroom doors
    - Installation of 2 utility closet, 3 sliding closet, 3 bedroom, 2 bathroom doors, and 1 front door
- Clean up existing back yard, the weeds are 5 feet high
    - Includes weed weed whacking and removal of all dead weeds
- Remove and replace one section of vinyl fence because it is not wide enough for ADA width along concrete path to front door
    - 45 feet x 6 feet high
    - (1) One 4' Gate
    - Includes widening the concrete by one foot

Notes:

- All work to be performed per plans provided to MDJ
- Any additional add on items will be at the request of Customer. Any adjustment shall be an additional cost.
- Price includes all labor (**Normal Working Hours - Davis Bacon Wages**), materials, equipment to complete this scope of work.
- Construction Exclusions:
    - New Washer and Dryer not included in contract.

CLARIFICATIONS AND EXCLUSIONS:

- Warranty
    - One year warranty against workmanship
    - Manufacturer's warranty varies
- We exclude plans, permits, permit fees, related fees, testing, inspection, survey, and engineering unless specified above
- We exclude utilities and hazardous or contaminated material.
- Construction water, power, and sanitary facilities available on site for MDJ's use at no cost.
- We exclude premium time.
- We exclude anything not specifically mentioned above.
- MDJ reserves the right to review, change, and/or delete any provisions of any prime contract or subcontract, which results from this quotation.

- All terms to be net 30 days in full upon receipt of invoice. Interest will be charged at the rate of 2% monthly on the unpaid balance.

BID PRICE: See Price Proposal

All work to be completed in a substantial and workmanlike manner according to standard practices for the sum of **See Price Proposal.** Any additional add on items will be at the request of Customer. Any adjustment shall be an additional cost.

Bid price is good for thirty (30) days only.

Any controversy or claim based on, arising out of, or relating to this agreement, or breach thereof, including any claim based on the work performed pursuant to this agreement, shall be submitted to the American Arbitration Association for binding arbitration in accordance with its rules. If any arbitration, legal action is brought to enforce this agreement, or arising out of or relating to the agreement, the prevailing party shall be entitled to recover from the non-prevailing party reasonable attorney fees and costs incurred, in addition to any and all other relief to which that party may be entitled.

Submitted by:

Matthew McMillon
President MDJ
310.490.1521
matt@buildwithmdj.com

Contractor's Price Proposal - Summary

Date: June 06, 2023

Re:

IQC Master Contract #:	CA-R7-GB06-123021-MDJ
Work Order #:	116758.00
Owner PO #:	
Title:	Fashion Park Unit 257 Conversion
Contractor:	MDJ Management
Proposal Value:	$610,749.96

Section - 01	**$27,922.15**
Section - 02	**$124,779.67**
Section - 03	**$44,628.54**
Section - 06	**$30,807.26**
Section - 07	**$39,946.76**
Section - 08	**$16,937.65**
Section - 09	**$136,489.60**
Section - 10	**$1,650.96**
Section - 11	**$6,131.21**
Section - 12	**$7,227.87**
Section - 22	**$61,651.38**
Section - 23	**$30,704.85**
Section - 26	**$57,035.70**
Section - 31	**$17,571.02**
Section - 32	**$7,265.34**
Proposal Total	**$610,749.96**

Thisl total represents the correct total for the proposal. Any discrepancy between line totals, sub-totals and the proposal total is due to rounding.

The Percentage of NPP on this Proposal: %

Contractor's Price Proposal - Detail

Date: June 06, 2023

Re:

IQC Master Contract #:	CA-R7-GB06-123021-MDJ
Work Order #:	116758.00
Owner PO #:	
Title:	Fashion Park Unit 257 Conversion
Contractor:	MDJ Management
Proposal Value:	$610,749.96

	Sect.	Item	Mod.	UOM	Description	Line Total
Labor	Equip.	Material	(Excludes)			

Section - 01

1	01 22 16	00 0002		EA	Reimbursable FeesReimbursable Fees will be paid to the contractor for eligible costs as directed by Owner. Insert the appropriate quantity to adjust the base cost to the actual Reimbursable Fee. If there are multiple Reimbursable Fees, list each one separately and add a comment in the "note" block to identify the Reimbursable Fee (e.g. sidewalk closure, road cut, various permits, extended warranty, expedited shipping costs, etc.). A copy of each receipt shall be submitted with the Price Proposal.	$13,147.20

	Quantity		Unit Price		Factor		Total
Installation	11,952.00	x	1.00	x	1.1000	=	13,147.20

Bond = $597,602 x 2%

2	01 74 19	00 0016		EA	40 CY Dumpster (5 Ton) "Construction Debris"Includes delivery of dumpster, rental cost, pick-up cost, hauling, and disposal fee. Non-hazardous material.	$11,002.63

	Quantity		Unit Price		Factor		Total
Installation	12.00	x	809.97	x	1.1320	=	11,002.63

10 dumpsters for abatement debris: cabinets, drywall from entire house, shower, toilet, stucco, insulation, ...
2 dumpsters for construction debris: drywall cuts, lumber cuts, basic trash

3	01 74 19	00 0019		EA	15 CY Low-Boy Dumpster Mixed RecyclableFor mixed dirt, rock, concrete brick or asphalt with no trash or organics. Includes service to deliver and pick-up dumpster, hauling, rental and disposal fee.	$3,772.32

	Quantity		Unit Price		Factor		Total
Installation	4.00	x	833.11	x	1.1320	=	3,772.32

for removal of excavated soil for footings, slab, trenching

Subtotal for Section - 01 **$27,922.15**

Section - 02

4	02 41 19	13 0063		LF	Rod Reinforced Concrete Slab Up To 4" Depth, Saw Cut	$2,499.46

	Quantity		Unit Price		Factor		Total
Installation	400.00	x	5.52	x	1.1320	=	2,499.46

sawcut existing slab to trench for new electrical and plumbing runs as needed per plans

5	02 82 33	00 0067		SF	>2,500 To 10,000 SF, Single Layer Gypsum Wall Board, Asbestos Abatement And Disposal	$62,951.52

	Quantity		Unit Price		Factor		Total
Installation	6,684.00	x	8.32	x	1.1320	=	62,951.52

demolition throughout. All drywall mud is hot. ceilings and walls

6	02 82 33	00 0074		SF	>500 To 2,500 SF, Gypsum Wall Board (Or Backer Board) With Ceramic Tile And Mastic, Asbestos Abatement And Disposal	$12,439.55

	Quantity		Unit Price		Factor		Total
Installation	550.00	x	19.98	x	1.1320	=	12,439.55

demolition of bathrooms tile and backer board walls and floor as well as kitchen tile

7	02 82 33	00 0087		SF	>500 To 2,500 SF, Spray On Acoustical Ceiling, Asbestos Abatement And Disposal	$16,659.92

	Quantity		Unit Price		Factor		Total
Installation	1,564.00	x	9.41	x	1.1320	=	16,659.92

demolition

Contractor's Price Proposal - Detail Continues..

Work Order Number: 116758.00
Work Order Title: Fashion Park Unit 257 Conversion

Section - 02

8	02 82 33 00 0101		SF	>500 To 2,500 SF, Single Layer Or First Of Multiple Layers, Floor Tile, Asbestos Abatement And Disposal									$10,959.07
			Installation	Quantity 1,564.00	x	Unit Price 6.19	x	Factor 1.1320	=	Total 10,959.07			
			demolition of 2 layers of floor tile										
9	02 82 33 00 0101	0001		For Each Additional Layer, Add									$2,744.19
			Installation	Quantity 1,564.00	x	Unit Price 1.55	x	Factor 1.1320	=	Total 2,744.19			
10	02 82 33 00 0245		CF	>100 To 250 CF, Asbestos Contaminated Debris, Asbestos Abatement And Disposal									$13,881.15
			Installation	Quantity 250.00	x	Unit Price 49.05	x	Factor 1.1320	=	Total 13,881.15			
			demolition of all cabinets and vanities per plans. They are attached to the walls so removal would disturb drywall material that is hot. This is for kitchen and bathroom										
11	02 82 33 00 0333		SF	High Efficiency Particulate Air (HEPA) Vacuum And Cleaning Of Contaminated Area									$1,186.20
			Installation	Quantity 1,564.00	x	Unit Price 0.67	x	Factor 1.1320	=	Total 1,186.20			
			demolition part of abatement procedures										
12	02 89 00 00 0021		EA	3 Stage Portable Personnel Decontamination Wash FacilityIncludes connection to negative air system.									$907.07
			Installation	Quantity 1.00	x	Unit Price 801.30	x	Factor 1.1320	=	Total 907.07			
			demolition part of abatement procedures										
13	02 89 00 00 0023		EA	Portable Waste Decontamination UnitIncludes connection to negative air system.									$551.54
			Installation	Quantity 1.00	x	Unit Price 487.23	x	Factor 1.1320	=	Total 551.54			
			demolition										

Subtotal for Section - 02 **$124,779.67**

Section - 03

14	03 11 13 00 0003		SF	Continuous Footings Foundation Wood Formwork									$1,882.74
			Installation	Quantity 240.00	x	Unit Price 6.93	x	Factor 1.1320	=	Total 1,882.74			
			footing for new addition										
15	03 11 13 00 0003	0001		For <1,000, Add									$350.47
			Installation	Quantity 240.00	x	Unit Price 1.29	x	Factor 1.1320	=	Total 350.47			
16	03 11 13 00 0009		LF	Up To 6" High Slab Edge and Block-Out Wood Formwork									$699.89
			Installation	Quantity 116.00	x	Unit Price 5.33	x	Factor 1.1320	=	Total 699.89			
			for new addition										
17	03 11 13 00 0009	0004		For Up To 250, Add									$69.28
			Installation	Quantity 60.00	x	Unit Price 1.02	x	Factor 1.1320	=	Total 69.28			
18	03 21 11 00 0251		EA	Dowels Or Hairpin, 1/2" x 30" Length, Drilled And Epoxy In Concrete, 6" Embedment									$5,682.36
			Installation	Quantity 225.00	x	Unit Price 22.31	x	Factor 1.1320	=	Total 5,682.36			
			200 LF of trenching. Epoxy and Dowel every 2'. One on each side. For reinforcement and tying into existing slab adjacent. 25 dowels to attach from porch sidewalk to existing .										

Contractor's Price Proposal - Detail Continues..

Work Order Number: 116758.00
Work Order Title: Fashion Park Unit 257 Conversion

Section - 03

19	03 21 13 00 0093		LF	#6, Grade 50, Slab On Grade, Galvanized Steel Reinforcement Bar								$2,010.43
					Quantity		Unit Price		Factor		Total	
				Installation	800.00	x	2.22	x	1.1320	=	2,010.43	
				200 LF of trenching and 600 LF for slab, porch, and footings. Installation of rebar every 2'.								
20	03 30 53 00 0007		CF	Hand Mix And Place ConcreteFor use where conventional equipment access is limited or when directed by the owner.								$6,592.77
					Quantity		Unit Price		Factor		Total	
				Installation	200.00	x	29.12	x	1.1320	=	6,592.77	
				patch back trenching in existing slab								
21	03 31 13 00 0003		SF	4" 3,000 PSI Slab On Grade Concrete Slabs Assembly								$1,768.18
					Quantity		Unit Price		Factor		Total	
				Installation	200.00	x	7.81	x	1.1320	=	1,768.18	
				for new addition								
22	03 31 13 00 0003	0156		For Up To 500, Add								$681.46
					Quantity		Unit Price		Factor		Total	
				Installation	200.00	x	3.01	x	1.1320	=	681.46	
23	03 31 13 00 0023		CY	Concrete Pump, Place 3,000 PSI Concrete Spread FootingsExcludes pumping equipment.								$14,833.73
					Quantity		Unit Price		Factor		Total	
				Installation	50.00	x	262.08	x	1.1320	=	14,833.73	
				24 CY footing for new addition. 26 CY for Front porch/sloped walk								
24	03 31 13 00 0023	0040		For >20 To 50, Add								$638.45
					Quantity		Unit Price		Factor		Total	
				Installation	50.00	x	11.28	x	1.1320	=	638.45	
25	03 54 16 00 0005		SF	1/2" Thick Self Leveling Cementitious Underlayment For FloorsIncluding Surface Preparation								$9,418.78
					Quantity		Unit Price		Factor		Total	
				Installation	1,564.00	x	5.32	x	1.1320	=	9,418.78	
				self leveling of floors for prior to installation of new vinyl plank flooring								

Subtotal for Section - 03 **$44,628.54**

Section - 06

26	06 11 16 00 0061		SF	2" x 4" Wood Wall Framing At 16" On Center								$2,351.16
					Quantity		Unit Price		Factor		Total	
				Installation	950.00	x	1.58	x	1.1320	=	1,699.13	
				Demolition	800.00	x	0.72	x	1.1320	=	652.03	
				for new walls, new addition, and soffits. Couple walls require double stacked 2x4 staggered A-602								
27	06 11 16 00 0062		SF	2" x 6" Wood Wall Framing At 16" On Center								$616.94
					Quantity		Unit Price		Factor		Total	
				Installation	250.00	x	2.18	x	1.1320	=	616.94	
				2x6 wall per plans								
28	06 11 16 00 0062	0004		For >200 To 500, Add								$101.88
					Quantity		Unit Price		Factor		Total	
				Installation	250.00	x	0.36	x	1.1320	=	101.88	
29	06 11 16 00 0063		SF	2" x 8" Wood Wall Framing At 16" On Center								$263.53
					Quantity		Unit Price		Factor		Total	
				Installation	80.00	x	2.91	x	1.1320	=	263.53	
				2x8 wall per plans								

Contractor's Price Proposal - Detail Continues..

Work Order Number: 116758.00
Work Order Title: Fashion Park Unit 257 Conversion

Section - 06

30	06 11 16 00 0063	0003		For Up To 200, Add									$86.94
			Installation	Quantity 80.00	x	Unit Price 0.96	x	Factor 1.1320	=	Total 86.94			
31	06 11 16 00 0179		LF	2" x 4" Pressure Treated Lumber, For Roofing Nailers									$871.64
			Installation	Quantity 250.00	x	Unit Price 3.08	x	Factor 1.1320	=	Total 871.64			
			for roof framing										
32	06 11 16 00 0183		LF	2" x 4" Pressure Treated Lumber, For Roofing Sleepers									$464.12
			Installation	Quantity 250.00	x	Unit Price 1.64	x	Factor 1.1320	=	Total 464.12			
			for roof framing										
33	06 16 33 00 0006		SF	3/4" Thick CDX Plywood Roof DeckingApplied to wood rafters.									$690.52
			Installation	Quantity 250.00	x	Unit Price 2.44	x	Factor 1.1320	=	Total 690.52			
			for new addition roof										
34	06 16 33 00 0006	0040		For Tongue And Groove, Add									$19.81
			Installation	Quantity 250.00	x	Unit Price 0.07	x	Factor 1.1320	=	Total 19.81			
35	06 16 33 00 0012		SF	1/2" Interior BC Plywood Wall SheathingApplied to wall studs.									$1,036.91
			Installation	Quantity 400.00	x	Unit Price 2.29	x	Factor 1.1320	=	Total 1,036.91			
			for new addition per plans										
36	06 16 33 00 0012	0005		For Shear Wall Construction, Add									$135.84
			Installation	Quantity 400.00	x	Unit Price 0.30	x	Factor 1.1320	=	Total 135.84			
37	06 16 33 00 0012	0006		For Exterior CC Grade Plywood, Add									$54.34
			Installation	Quantity 400.00	x	Unit Price 0.12	x	Factor 1.1320	=	Total 54.34			
38	06 16 33 00 0020		SF	3/4" CD Grade Plywood Floor DeckingApplied to floor or joists.									$5,169.71
			Installation	Quantity 1,564.00	x	Unit Price 2.36	x	Factor 1.1320	=	Total 4,178.26			
			Demolition	1,564.00	x	0.56	x	1.1320	=	991.45			
			for new floor decking per plans FSI/A-602. plans require glue										
39	06 16 33 00 0020	0038		For Exterior Glue, Add									$1,593.40
			Installation	Quantity 15,640.00	x	Unit Price 0.09	x	Factor 1.1320	=	Total 1,593.40			
40	06 41 13 00 0225		EA	15" Wide, 35" High x 23-3/4" Deep, Single Drawer and Single Door, Solid Wood Face Frame, Thermofoil Door and Drawer Front, Base Cabinet									$736.43
			Installation	Quantity 2.00	x	Unit Price 325.28	x	Factor 1.1320	=	Total 736.43			
			demolition of 1 kitchen and installation of 2 new kitchen cabinets per plans										
41	06 41 13 00 0225	0126		For Solid Wood Drawers, Dovetail Joints And Full Extension Drawer Guides, Add									$231.72
			Installation	Quantity 2.00	x	Unit Price 102.35	x	Factor 1.1320	=	Total 231.72			
42	06 41 13 00 0225	0130		For All Plywood Box Construction, Add									$241.55
			Installation	Quantity 2.00	x	Unit Price 106.69	x	Factor 1.1320	=	Total 241.55			

Work Order Number: 116758.00
Work Order Title: Fashion Park Unit 257 Conversion

Section - 06

43	06 41 13 00 0226		EA	18" Wide, 35" High x 23-3/4" Deep, Single Drawer and Single Door, Solid Wood Face Frame, Thermofoil Door and Drawer Front, Base Cabinet									$770.08
			Installation	Quantity 2.00	x	Unit Price 340.14	x	Factor 1.1320	=	Total 770.08			
				demolition of 1 kitchen and installation of 2 new kitchen cabinets per plans									
44	06 41 13 00 0226	0126		For Solid Wood Drawers, Dovetail Joints And Full Extension Drawer Guides, Add									$231.72
			Installation	Quantity 2.00	x	Unit Price 102.35	x	Factor 1.1320	=	Total 231.72			
45	06 41 13 00 0226	0130		For All Plywood Box Construction, Add									$241.55
			Installation	Quantity 2.00	x	Unit Price 106.69	x	Factor 1.1320	=	Total 241.55			
46	06 41 13 00 0228		EA	24" Wide, 35" High x 23-3/4" Deep, Single Drawer and Single Door, Solid Wood Face Frame, Thermofoil Door and Drawer Front, Base Cabinet									$460.91
			Installation	Quantity 1.00	x	Unit Price 407.16	x	Factor 1.1320	=	Total 460.91			
				demolition of 1 kitchen and installation of 2 new kitchen cabinets per plans									
47	06 41 13 00 0228	0126		For Solid Wood Drawers, Dovetail Joints And Full Extension Drawer Guides, Add									$115.86
			Installation	Quantity 1.00	x	Unit Price 102.35	x	Factor 1.1320	=	Total 115.86			
48	06 41 13 00 0228	0130		For All Plywood Box Construction, Add									$120.77
			Installation	Quantity 1.00	x	Unit Price 106.69	x	Factor 1.1320	=	Total 120.77			
49	06 41 13 00 0231		EA	33" Wide, 35" High x 23-3/4" Deep, Single Drawer and Double Door, Solid Wood Face Frame, Thermofoil Door and Drawer Front, Base Cabinet									$1,098.81
			Installation	Quantity 2.00	x	Unit Price 485.34	x	Factor 1.1320	=	Total 1,098.81			
				demolition of 1 kitchen and installation of 2 new kitchen cabinets per plans									
50	06 41 13 00 0231	0126		For Solid Wood Drawers, Dovetail Joints And Full Extension Drawer Guides, Add									$231.72
			Installation	Quantity 2.00	x	Unit Price 102.35	x	Factor 1.1320	=	Total 231.72			
51	06 41 13 00 0231	0130		For All Plywood Box Construction, Add									$241.55
			Installation	Quantity 2.00	x	Unit Price 106.69	x	Factor 1.1320	=	Total 241.55			
52	06 41 13 00 0232		EA	36" Wide, 35" High x 23-3/4" Deep, Single Drawer and Double Door, Solid Wood Face Frame, Thermofoil Door and Drawer Front, Base Cabinet									$1,133.00
			Installation	Quantity 2.00	x	Unit Price 500.44	x	Factor 1.1320	=	Total 1,133.00			
				demolition of 1 kitchen and installation of 2 new kitchen cabinets per plans									
53	06 41 13 00 0232	0126		For Solid Wood Drawers, Dovetail Joints And Full Extension Drawer Guides, Add									$231.72
			Installation	Quantity 2.00	x	Unit Price 102.35	x	Factor 1.1320	=	Total 231.72			
54	06 41 13 00 0232	0130		For All Plywood Box Construction, Add									$241.55
			Installation	Quantity 2.00	x	Unit Price 106.69	x	Factor 1.1320	=	Total 241.55			
55	06 41 13 00 0248		EA	15" Wide, 35" High x 23-3/4" Deep, Four Drawer Base, Solid Wood Face Frame and Thermofoil Drawer Fronts, Base Cabinet									$881.74
			Installation	Quantity 2.00	x	Unit Price 389.46	x	Factor 1.1320	=	Total 881.74			
				demolition of 1 kitchen and installation of 2 new kitchen cabinets per plans									

Contractor's Price Proposal - Detail Continues..

Work Order Number: 116758.00
Work Order Title: Fashion Park Unit 257 Conversion

Section - 06

56	06 41 13 00 0248	0129		For Solid Wood Drawers, Dovetail Joints And Full Extension Drawer Guides, Add										$926.86
			Installation	Quantity		Unit Price		Factor		Total				
				2.00	x	409.39	x	1.1320	=	926.86				
57	06 41 13 00 0248	0130		For All Plywood Box Construction, Add										$241.55
			Installation	Quantity		Unit Price		Factor		Total				
				2.00	x	106.69	x	1.1320	=	241.55				
58	06 41 13 00 0258		EA	33" Wide, 12" High x 12" Deep, Double Door, Solid Wood Face Frame and Thermofoil Doors, Wall Cabinet										$331.44
			Installation	Quantity		Unit Price		Factor		Total				
				1.00	x	292.79	x	1.1320	=	331.44				
				demolition of 1 kitchen and installation of 2 new kitchen cabinets per plans										
59	06 41 13 00 0258	0131		For All Plywood Box Construction, Add										$64.81
			Installation	Quantity		Unit Price		Factor		Total				
				1.00	x	57.25	x	1.1320	=	64.81				
60	06 41 13 00 0259		EA	36" Wide, 12" High x 12" Deep, Double Door, Solid Wood Face Frame and Thermofoil Doors, Wall Cabinet										$365.34
			Installation	Quantity		Unit Price		Factor		Total				
				1.00	x	322.74	x	1.1320	=	365.34				
				demolition of 1 kitchen and installation of 2 new kitchen cabinets per plans										
61	06 41 13 00 0259	0131		For All Plywood Box Construction, Add										$64.81
			Installation	Quantity		Unit Price		Factor		Total				
				1.00	x	57.25	x	1.1320	=	64.81				
62	06 41 13 00 0278		EA	30" Wide, 18" High x 12" Deep, Double Doors, Solid Wood Face Frame and Thermofoil Doors, Wall Cabinet										$722.69
			Installation	Quantity		Unit Price		Factor		Total				
				2.00	x	319.21	x	1.1320	=	722.69				
				demolition of 1 kitchen and installation of 2 new kitchen cabinets per plans										
63	06 41 13 00 0278	0131		For All Plywood Box Construction, Add										$129.61
			Installation	Quantity		Unit Price		Factor		Total				
				2.00	x	57.25	x	1.1320	=	129.61				
64	06 41 13 00 0282		EA	12" Wide, 30" High x 12" Deep, Single Door, Solid Wood Face Frame and Thermofoil Door, Wall Cabinet										$597.90
			Installation	Quantity		Unit Price		Factor		Total				
				2.00	x	264.09	x	1.1320	=	597.90				
				demolition of 1 kitchen and installation of 2 new kitchen cabinets per plans										
65	06 41 13 00 0282	0131		For All Plywood Box Construction, Add										$129.61
			Installation	Quantity		Unit Price		Factor		Total				
				2.00	x	57.25	x	1.1320	=	129.61				
66	06 41 13 00 0283		EA	15" Wide, 30" High x 12" Deep, Single Door, Solid Wood Face Frame and Thermofoil Door, Wall Cabinet										$325.62
			Installation	Quantity		Unit Price		Factor		Total				
				1.00	x	287.65	x	1.1320	=	325.62				
				demolition of 1 kitchen and installation of 2 new kitchen cabinets per plans										
67	06 41 13 00 0283	0131		For All Plywood Box Construction, Add										$64.81
			Installation	Quantity		Unit Price		Factor		Total				
				1.00	x	57.25	x	1.1320	=	64.81				
68	06 41 13 00 0283		EA	15" Wide, 30" High x 12" Deep, Single Door, Solid Wood Face Frame and Thermofoil Door, Wall Cabinet										$325.62
			Installation	Quantity		Unit Price		Factor		Total				
				1.00	x	287.65	x	1.1320	=	325.62				
				demolition of 1 kitchen and installation of 2 new kitchen cabinets per plans										

Contractor's Price Proposal - Detail Continues..

Work Order Number: 116758.00
Work Order Title: Fashion Park Unit 257 Conversion

Section - 06

69	06 41 13 00 0283	0131		For All Plywood Box Construction, Add								$64.81
			Installation	Quantity 1.00	x	Unit Price 57.25	x	Factor 1.1320	=	Total 64.81		
70	06 41 13 00 0284		EA	18" Wide, 30" High x 12" Deep, Single Door, Solid Wood Face Frame and Thermofoil Door, Wall Cabinet								$694.28
			Installation	Quantity 2.00	x	Unit Price 306.66	x	Factor 1.1320	=	Total 694.28		
				demolition of 1 kitchen and installation of 2 new kitchen cabinets per plans								
71	06 41 13 00 0284	0131		For All Plywood Box Construction, Add								$129.61
			Installation	Quantity 2.00	x	Unit Price 57.25	x	Factor 1.1320	=	Total 129.61		
72	06 41 13 00 0289		EA	33" Wide, 30" High x 12" Deep, Double Doors, Solid Wood Face Frame and Thermofoil Doors, Wall Cabinet								$974.72
			Installation	Quantity 2.00	x	Unit Price 430.53	x	Factor 1.1320	=	Total 974.72		
				demolition of 1 kitchen and installation of 2 new kitchen cabinets per plans								
73	06 41 13 00 0289	0131		For All Plywood Box Construction, Add								$129.61
			Installation	Quantity 2.00	x	Unit Price 57.25	x	Factor 1.1320	=	Total 129.61		
74	06 41 13 00 0329		EA	36" Wide, 84" High x 24" Deep, Four Doors, Solid Wood Face Frame and Thermofoil Doors, Pantry Cabinet								$1,462.41
			Installation	Quantity 1.00	x	Unit Price 1,291.88	x	Factor 1.1320	=	Total 1,462.41		
				demolition of 1 kitchen and installation of 2 new kitchen cabinets per plans								
75	06 41 13 00 0329	0132		For All Plywood Box Construction, Add								$239.58
			Installation	Quantity 1.00	x	Unit Price 211.64	x	Factor 1.1320	=	Total 239.58		
76	06 41 93 00 0007		EA	7" To 8-1/2", Flat Cabinet Pull Handle								$2,154.15
			Installation	Quantity 54.00	x	Unit Price 35.24	x	Factor 1.1320	=	Total 2,154.15		
				demolition of 1 kitchen and installation of 2 new kitchen cabinets per plans								

Subtotal for Section - 06 **$30,807.26**

Section - 07

77	07 21 16 00 0006		SF	5-1/2" Thick, Kraft Faced, R-21 Fiberglass Flexible Insulation								$19,505.18
				Quantity		Unit Price		Factor		Total		
			Installation	8,284.00	x	1.72	x	1.1320	=	16,129.28		
			Demolition	8,284.00	x	0.36	x	1.1320	=	3,375.90		
				removal of existing insulation and installation of new 6684 sqft of walls 1564 sqft of ceilings								
78	07 26 13 00 0010		CSF	Building Wrap (Tyvek)								$5,304.13
			Installation	Quantity 87.50	x	Unit Price 53.55	x	Factor 1.1320	=	Total 5,304.13		
				for new addition								
79	07 31 13 13 0004		SQ	230 LB/SQ, 5" Exposure, Three Tab Fiberglass Reinforced, Asphalt Composition Shingle (CertainTeed XT 30)								$7,409.79
			Installation	Quantity 25.00	x	Unit Price 261.83	x	Factor 1.1320	=	Total 7,409.79		
				new shingle roof for addition								

Work Order Number: 116758.00
Work Order Title: Fashion Park Unit 257 Conversion

Section - 07

80	07 34 00 00 0003		SQ	30 LB, Asphalt Saturated Organic Felt Roofing Underlayment, Mechanically Fastened									$1,416.70
			Installation	Quantity 25.00	x	Unit Price 50.06	x	Factor 1.1320	=	Total 1,416.70			
			new shingle roof for addition										
81	07 41 13 00 0026		LF	Eave Flashing For Aluminum Exposed Fastener Metal Roofing									$784.25
			Installation	Quantity 40.00	x	Unit Price 17.32	x	Factor 1.1320	=	Total 784.25			
			for new addition										
82	07 41 13 00 0026	0130		For Fluoropolymer (Kynar®) Coating, Add									$42.11
			Installation	Quantity 40.00	x	Unit Price 0.93	x	Factor 1.1320	=	Total 42.11			
83	07 62 13 00 0033		SF	22 Gauge, 0.034" Thick, Galvanized Steel Flashing									$4,149.91
			Installation	Quantity 300.00	x	Unit Price 12.22	x	Factor 1.1320	=	Total 4,149.91			
			flashing per plans for addition and 100 sqft for new windows										
84	07 62 13 00 0033	0080		For Wrap Around Window Panning, Add									$699.58
			Installation	Quantity 100.00	x	Unit Price 6.18	x	Factor 1.1320	=	Total 699.58			
85	07 71 23 00 0016		LF	6", 0.032" Thick, Box Style Aluminum Gutter									$429.88
			Installation	Quantity 25.00	x	Unit Price 15.19	x	Factor 1.1320	=	Total 429.88			
			rain gutter per plans										
86	07 71 23 00 0016	0322		For Up To 100', Add									$70.18
			Installation	Quantity 25.00	x	Unit Price 2.48	x	Factor 1.1320	=	Total 70.18			
87	07 71 23 00 0029		EA	6", Box Style Aluminum Gutter End Cap									$18.34
			Installation	Quantity 2.00	x	Unit Price 8.10	x	Factor 1.1320	=	Total 18.34			
			rain gutter per plans										
88	07 71 23 00 0055		LF	4" x 5", 0.019" Thick, Rectangular Aluminum Downspout									$102.67
			Installation	Quantity 10.00	x	Unit Price 9.07	x	Factor 1.1320	=	Total 102.67			
			rain gutter per plans										
89	07 71 23 00 0055	0325		For Up To 100', Add									$14.04
			Installation	Quantity 10.00	x	Unit Price 1.24	x	Factor 1.1320	=	Total 14.04			

Subtotal for Section - 07 **$39,946.76**

Section - 08

90	08 05 13 00 0041		EA	Factory Prepare Wood Door (Rated Or Non-Rated) For Mortise Lockset Hardware									$470.41
			Installation	Quantity 6.00	x	Unit Price 69.26	x	Factor 1.1320	=	Total 470.41			
			for all new doors. 1 front door, 2 bath, and 3 bedroom										

Work Order Number: 116758.00
Work Order Title: Fashion Park Unit 257 Conversion

Section - 08

91	08 14 16 00 0134	EA	3'-0" x 6'-8" x 1-3/4" Thick, 5 Ply, Hollow Core (HC), Birch Faced Wood Door									$2,910.85
				Quantity		Unit Price		Factor		Total		
			Installation	7.00	x	288.16	x	1.1320	=	2,283.38		
			Demolition	10.00	x	55.43	x	1.1320	=	627.47		
			Demo of 3 utility closet, 5 bedroom, and 2 bathroom doors. Installation of 2 utility closet, 3 bedroom, 2 bathroom doors.									
92	08 14 73 00 0074	EA	5' Wide, Two 2'-6" x 6'-8" x 1-3/8" Thick, Flush, Hollow Core (HC), Birch Faced Wood Bi-Pass Doors									$1,525.71
				Quantity		Unit Price		Factor		Total		
			Installation	3.00	x	396.94	x	1.1320	=	1,348.01		
			Demolition	2.00	x	78.49	x	1.1320	=	177.70		
			removal of 2 existing closet sliding doors, installation of 3 new closet sliding doors									
93	08 53 13 00 0549	EA	>110" To 120" UI, Horizontal Sliding Premium Vinyl Window (Pella 350)									$4,060.21
				Quantity		Unit Price		Factor		Total		
			Installation	5.00	x	631.42	x	1.1320	=	3,573.84		
			Demolition	6.00	x	71.61	x	1.1320	=	486.38		
			removal of 6 existing windows. Installation of 5 new windows per plans									
94	08 71 11 00 0004	PR	3-1/2" x 3-1/2" Standard Duty, Full Mortise, Plain Bearing, Brass/Bronze, Satin Chrome Finish Hinge									$652.61
				Quantity		Unit Price		Factor		Total		
			Installation	7.00	x	73.13	x	1.1320	=	579.48		
			Demolition	10.00	x	6.46	x	1.1320	=	73.13		
			Demo of 3 utility closet, 5 bedroom, and 2 bathroom doors. Installation of 2 utility closet, 3 bedroom, 2 bathroom doors.									
95	08 71 11 00 0005	PR	4" x 4" Standard Duty, Full Mortise, Plain Bearing, Brass/Bronze, Satin Chrome Finish Hinge									$136.35
				Quantity		Unit Price		Factor		Total		
			Installation	1.50	x	80.30	x	1.1320	=	136.35		
			for new front door per plans									
96	08 71 11 00 0513	EA	3" Projection, Residential Spring Type, Bright Brass Finish, Steel Wall Stop (Ives 63)									$130.43
				Quantity		Unit Price		Factor		Total		
			Installation	7.00	x	9.86	x	1.1320	=	78.13		
			Demolition	10.00	x	4.62	x	1.1320	=	52.30		
			per plans									
97	08 71 11 00 0655	EA	190 Degree Angle Of View, Bright Brass Finish, Brass One-Way Wide Angle Door Viewer (Ives U698)									$47.59
				Quantity		Unit Price		Factor		Total		
			Installation	1.00	x	42.04	x	1.1320	=	47.59		
			for new front door per plans									
98	08 71 11 00 2288	EA	Passage/Closet F01 Mortise LatchsetBoth sides always unlocked.									$1,471.62
				Quantity		Unit Price		Factor		Total		
			Installation	2.00	x	615.36	x	1.1320	=	1,393.18		
			Demolition	3.00	x	23.10	x	1.1320	=	78.45		
			Demo of 3 utility closet. Installation of 2 utility closet doors									
99	08 71 11 00 2289	EA	Bath/Bedroom Privacy F02/F19 Mortise LocksetLocked with thumb knob inside.									$4,323.67
				Quantity		Unit Price		Factor		Total		
			Installation	5.00	x	731.56	x	1.1320	=	4,140.63		
			Demolition	7.00	x	23.10	x	1.1320	=	183.04		
			Demo of 5 bedroom, and 2 bathroom doors. Installation of 3 bedroom, 2 bathroom doors.									

Work Order Number: 116758.00
Work Order Title: Fashion Park Unit 257 Conversion

Section - 08

100	08 71 11 00 2293		EA	Entrance F08 Mortise LocksetLocked with key outside and thumb knob inside.								$960.13
					Quantity		Unit Price		Factor		Total	
				Installation	1.00	x	848.17	x	1.1320	=	960.13	
				for new front door per plans								
101	08 71 11 00 2293	0263		For Satin Brass Clear Coat US4 (BHMA 606) Finish, Add								$42.78
					Quantity		Unit Price		Factor		Total	
				Installation	1.00	x	37.79	x	1.1320	=	42.78	
102	08 72 33 00 0155		LF	3/8" x 3/16", Silicon Compression Bulb, Adhesive Backed Perimeter Gasketing Weather-Strip (Pemko PK33)								$63.89
					Quantity		Unit Price		Factor		Total	
				Installation	17.00	x	3.32	x	1.1320	=	63.89	
				for new front door per plans								
103	08 72 43 00 0011		LF	6" Width, 1/4" Height, Aluminum Saddle Threshold (Pemko 272A)								$125.07
					Quantity		Unit Price		Factor		Total	
				Installation	3.00	x	36.83	x	1.1320	=	125.07	
				for new front door per plans								
104	08 72 43 00 0011	0458		For Color Anodized Finish, Add								$16.33
					Quantity		Unit Price		Factor		Total	
				Installation	3.00	x	4.81	x	1.1320	=	16.33	

Subtotal for Section - 08 **$16,937.65**

Section - 09

105	09 05 71 00 0002		SF	5 Mil Tile And Stone Acoustical Underlayment (EasyMat)								$6,391.32
					Quantity		Unit Price		Factor		Total	
				Installation	1,564.00	x	3.61	x	1.1320	=	6,391.32	
				acousthmat underlayment per plans FSI/A-602								
106	09 05 71 00 0005		SF	2 MM Thick Resilient Plank Floor Acoustical Underlayment (Floormuffler)								$2,637.97
					Quantity		Unit Price		Factor		Total	
				Installation	1,564.00	x	1.49	x	1.1320	=	2,637.97	
				closest LI to gypsum sanded floor underlayment per plans FSI/A-602								
107	09 22 13 23 0008		SF	25 Gauge, 16" On Center, Installed On Walls, Double-Leg Resilient Channel, RC2 Furring Channel								$2,604.73
					Quantity		Unit Price		Factor		Total	
				Installation	650.00	x	3.54	x	1.1320	=	2,604.73	
				Resilient channel per plans A-602								
108	09 22 13 23 0010		SF	25 Gauge, 16" On Center, Installed On Ceilings, Double-Leg Resilient Channel, RC2 Furring Channel								$7,418.18
					Quantity		Unit Price		Factor		Total	
				Installation	1,564.00	x	4.19	x	1.1320	=	7,418.18	
				Resilient channel per plans FSI/A-602								
109	09 22 36 23 0005		SF	3.4 LB/SY, Installed On Studs Or Furred Walls, Flat Diamond, Expanded Metal Lath								$3,022.16
					Quantity		Unit Price		Factor		Total	
				Installation	875.00	x	2.53	x	1.1320	=	2,505.97	
				Demolition	800.00	x	0.57	x	1.1320	=	516.19	
				removal of existing stucco and installation of new for new addition and new front entrance								

Work Order Number: 116758.00
Work Order Title: Fashion Park Unit 257 Conversion

Section - 09

110	09 24 23 00 0002		SF	Scratch/Brown/Finish, Three Coat Troweled StuccoExcludes lath and felt. Interior or exterior, one side.								$10,885.03
					Quantity		Unit Price		Factor		Total	
				Installation	875.00	x	8.53	x	1.1320	=	8,448.97	
				Demolition	800.00	x	2.69	x	1.1320	=	2,436.06	
				removal of existing stucco and installation of new for new addition and new front entrance								
111	09 24 23 00 0004		SF	Scratch/Finish, Two Coat Troweled StuccoExcludes lath and felt. Interior or exterior, one side.								$6,763.70
					Quantity		Unit Price		Factor		Total	
				Installation	875.00	x	5.64	x	1.1320	=	5,586.42	
				Demolition	800.00	x	1.30	x	1.1320	=	1,177.28	
				removal of existing stucco and installation of new for new addition and new front entrance								
112	09 24 23 00 0005		SF	Finish Coat Troweled StuccoExcludes lath and felt. Interior or exterior, one side.								$4,373.48
					Quantity		Unit Price		Factor		Total	
				Installation	875.00	x	3.62	x	1.1320	=	3,585.61	
				Demolition	800.00	x	0.87	x	1.1320	=	787.87	
				removal of existing stucco and installation of new for new addition and new front entrance								
113	09 29 10 00 0006		SF	5/8" Gypsum Board								$14,191.84
					Quantity		Unit Price		Factor		Total	
				Installation	8,248.00	x	1.52	x	1.1320	=	14,191.84	
				for walls and ceilings per plans								
114	09 29 10 00 0038		SF	Up To 10' High, Walls, Tape, Spackle And Finish Gypsum Board								$4,464.11
					Quantity		Unit Price		Factor		Total	
				Installation	6,684.00	x	0.59	x	1.1320	=	4,464.11	
				for walls								
115	09 29 10 00 0038	0048		For ASTM C840 Level 5 High Quality Finish, Add								$3,329.17
					Quantity		Unit Price		Factor		Total	
				Installation	6,684.00	x	0.44	x	1.1320	=	3,329.17	
116	09 29 10 00 0041		SF	Up To 10' High, Ceilings, Tape, Spackle And Finish Gypsum Board								$1,363.25
					Quantity		Unit Price		Factor		Total	
				Installation	1,564.00	x	0.77	x	1.1320	=	1,363.24	
				for ceilings								
117	09 29 10 00 0041	0048		For ASTM C840 Level 5 High Quality Finish, Add								$10,091.55
					Quantity		Unit Price		Factor		Total	
				Installation	15,640.00	x	0.57	x	1.1320	=	10,091.55	
118	09 29 10 00 0044		LF	Up To 10' High, Vertical Corners, Tape, Spackle And Finish Gypsum Board								$1,651.00
					Quantity		Unit Price		Factor		Total	
				Installation	1,236.00	x	1.18	x	1.1320	=	1,651.00	
				walls: 150 vertical corners @ 8' throughout both floors. windows: 36 LF of vertical corners								
119	09 29 10 00 0044	0048		For ASTM C840 Level 5 High Quality Finish, Add								$1,217.26
					Quantity		Unit Price		Factor		Total	
				Installation	1,236.00	x	0.87	x	1.1320	=	1,217.26	
120	09 29 10 00 0047		LF	Up To 10' High, Horizontal Corners, Tape, Spackle And Finish Gypsum Board								$1,209.66
					Quantity		Unit Price		Factor		Total	
				Installation	780.00	x	1.37	x	1.1320	=	1,209.66	
				750 LF of walls and 30 LF of windows								

Work Order Number: 116758.00
Work Order Title: Fashion Park Unit 257 Conversion

Section - 09

121	09 29 10 00 0047	0048		For ASTM C840 Level 5 High Quality Finish, Add									$891.79
			Installation	Quantity 780.00	x	Unit Price 1.01	x	Factor 1.1320	=	Total 891.79			
122	09 29 10 00 0051		LF	Corner Bead, Galvanized Steel For Gypsum Board									$7,508.15
			Installation	Quantity 2,016.00	x	Unit Price 3.29	x	Factor 1.1320	=	Total 7,508.15			
			walls: 150 vertical corners @ 8' throughout both floors. 750 LF of horizontal corners Windows: 86 LF										
123	09 65 13 13 0003		LF	4" High, 1/8" Thick, Type TV Thermoplastic Vinyl Wall Base, All Colors									$2,844.15
			Installation	Quantity 750.00	x	Unit Price 3.35	x	Factor 1.1320	=	Total 2,844.15			
			750 LF of walls										
124	09 65 23 00 0004		SF	0.16" Overall Thickness, 0.020" Wear Layer, Vinyl Plank Flooring (Armstrong® Luxe Plank™)									$16,907.78
			Installation	Quantity 1,564.00	x	Unit Price 9.55	x	Factor 1.1320	=	Total 16,907.78			
			new flooring throughout per plans										
125	09 91 13 00 0095		SF	1 Coat Primer, Brush/Roller Work, Paint Exterior Stucco Walls									$1,236.14
			Installation	Quantity 1,400.00	x	Unit Price 0.78	x	Factor 1.1320	=	Total 1,236.14			
			paint front and side of building for affected areas corner to corner										
126	09 91 13 00 0097		SF	2 Coats Paint, Brush/Roller Work, Paint Exterior Stucco Walls									$2,599.07
			Installation	Quantity 1,400.00	x	Unit Price 1.64	x	Factor 1.1320	=	Total 2,599.07			
			paint front and side of building for affected areas corner to corner										
127	09 91 23 00 0067		SF	1 Coat Primer, Brush/Roller Work, Paint Interior Plaster/Drywall Walls									$4,161.46
			Installation	Quantity 6,684.00	x	Unit Price 0.55	x	Factor 1.1320	=	Total 4,161.46			
			for walls										
128	09 91 23 00 0069		SF	2 Coats Paint, Brush/Roller Work, Paint Interior Plaster/Drywall Walls									$8,322.92
			Installation	Quantity 6,684.00	x	Unit Price 1.10	x	Factor 1.1320	=	Total 8,322.92			
			for walls										
129	09 91 23 00 0161		SF	1 Coat Primer, Brush/Roller Work, Paint Interior Drywall/Plaster Ceiling									$1,150.79
			Installation	Quantity 1,564.00	x	Unit Price 0.65	x	Factor 1.1320	=	Total 1,150.79			
			for ceilings										
130	09 91 23 00 0163		SF	2 Coats Paints, Brush/Roller Work, Paint Interior Drywall/Plaster Ceiling									$2,071.42
			Installation	Quantity 1,564.00	x	Unit Price 1.17	x	Factor 1.1320	=	Total 2,071.42			
			for ceilings										
131	09 91 23 00 0252		LF	1 Coat Primer, Brush/Roller Work, Paint Interior Wood Door Frame And Trim									$570.53
			Installation	Quantity 600.00	x	Unit Price 0.84	x	Factor 1.1320	=	Total 570.53			
			15 total doors. 40 LF of trim per door										
132	09 91 23 00 0254		LF	2 Coats Paint, Brush/Roller Work, Paint Interior Wood Door Frame And Trime									$1,249.73
			Installation	Quantity 600.00	x	Unit Price 1.84	x	Factor 1.1320	=	Total 1,249.73			
			15 total doors. 40 LF of trim per door										

Contractor's Price Proposal - Detail Continues..

Work Order Number: 116758.00
Work Order Title: Fashion Park Unit 257 Conversion

Section - 09

133	09 91 23 00 0275	EA	1 Coat Primer, Brush/Roller Work, Both Faces, Paint Interior Wood Door								$1,153.96
				Quantity		Unit Price		Factor		Total	
			Installation	15.00	x	67.96	x	1.1320	=	1,153.96	
			8 doors on first floor 7 doors on second floor								
134	09 91 23 00 0277	EA	2 Coats Paint, Brush/Roller Work, Both Faces, Paint Interior Wood Door								$2,072.58
				Quantity		Unit Price		Factor		Total	
			Installation	15.00	x	122.06	x	1.1320	=	2,072.58	
			8 doors on first floor 7 doors on second floor								
135	09 91 23 00 0307	LF	1 Coat Primer, Brush/Roller Work, Paint Interior Wood Window Frame And Trim								$163.73
				Quantity		Unit Price		Factor		Total	
			Installation	128.00	x	1.13	x	1.1320	=	163.73	
			8 windows with 128 LF of trim								
136	09 91 23 00 0309	LF	2 Coats Paint, Brush/Roller Work, Paint Interior Wood Window Frame And Trim								$357.89
				Quantity		Unit Price		Factor		Total	
			Installation	128.00	x	2.47	x	1.1320	=	357.89	
			8 windows with 128 LF of trim								
137	09 91 23 00 0350	LF	1 Coat Primer, Brush Work, Paint Interior Wood Trim To 6" Wide								$492.42
				Quantity		Unit Price		Factor		Total	
			Installation	750.00	x	0.58	x	1.1320	=	492.42	
			750 LF of baseboards								
138	09 91 23 00 0352	LF	2 Coats Paint, Paint Interior Wood Trim to 6" Wide								$1,120.68
				Quantity		Unit Price		Factor		Total	
			Installation	750.00	x	1.32	x	1.1320	=	1,120.68	
			750 LF of baseboards								

Subtotal for Section - 09 **$136,489.60**

Section - 10

139	10 28 13 13 0045	EA	Single Roll, Surface Mounted, Stainless Steel, Satin Finish, Toilet Tissue Dispenser (Bobrick B-6857)								$123.83
				Quantity		Unit Price		Factor		Total	
			Installation	1.00	x	88.61	x	1.1320	=	100.31	
			Demolition	1.00	x	20.78	x	1.1320	=	23.52	
			per plans								
140	10 28 13 13 0170	EA	36" Length, 1-1/2" Diameter, Stainless Steel Grab Bar (Bobrick B-6806x36)								$311.68
				Quantity		Unit Price		Factor		Total	
			Installation	3.00	x	91.78	x	1.1320	=	311.68	
			per plans								
141	10 28 13 13 0171	EA	42" Length, 1-1/2" Diameter, Stainless Steel Grab Bar (Bobrick B-6806x42)								$106.14
				Quantity		Unit Price		Factor		Total	
			Installation	1.00	x	93.76	x	1.1320	=	106.14	
			per plans								
142	10 28 13 13 0217	EA	Telescoping 60" To 72" Length, 20-Gauge, 1" Diameter, Stainless Steel Curved Shower Rod With Concealed Mounting (Kohler Expanse K-9349)								$158.19
				Quantity		Unit Price		Factor		Total	
			Installation	1.00	x	118.96	x	1.1320	=	134.66	
			Demolition	1.00	x	20.78	x	1.1320	=	23.52	
			per plans								

Contractor's Price Proposal - Detail Continues..

Work Order Number: 116758.00
Work Order Title: Fashion Park Unit 257 Conversion

Section - 10

143	10 28 13 13 0322	EA	24" Length, 3/4" Diameter, Stainless Steel Towel Bar (Bobrick B-674)									$133.36
				Quantity		Unit Price		Factor		Total		
			Installation	1.00	x	97.03	x	1.1320	=	109.84		
			Demolition	1.00	x	20.78	x	1.1320	=	23.52		
			per plans									
144	10 28 13 13 0390	EA	20" x 26", Surface Mounted, Aluminum Medicine Cabinet (Kohler K-CB)									$817.76
				Quantity		Unit Price		Factor		Total		
			Installation	1.00	x	676.23	x	1.1320	=	765.49		
			Demolition	1.00	x	46.17	x	1.1320	=	52.26		
			per plans									

Subtotal for Section - 10 **$1,650.96**

Section - 11

145	11 30 13 13 0010	EA	30" Gas Range With Oven									$2,325.17
				Quantity		Unit Price		Factor		Total		
			Installation	2.00	x	985.73	x	1.1320	=	2,231.69		
			Demolition	1.00	x	82.58	x	1.1320	=	93.48		
			remove and save existing for clients attic stock. Installation of 2 new.									
146	11 30 13 13 0015	EA	30" Venting Range Hood (Broan 40000)									$619.32
				Quantity		Unit Price		Factor		Total		
			Installation	2.00	x	242.58	x	1.1320	=	549.20		
			Demolition	1.00	x	61.94	x	1.1320	=	70.12		
			removal of existing and installation of 2 new									
147	11 30 13 13 0048	EA	>16 To 18 CF Top Freezer Refrigerator									$2,550.65
				Quantity		Unit Price		Factor		Total		
			Installation	2.00	x	1,105.96	x	1.1320	=	2,503.89		
			Demolition	1.00	x	41.30	x	1.1320	=	46.75		
			remove and save existing for clients attic stock. Installation of 2 new.									
148	11 30 13 13 0084	EA	1/3 HP Insulated Garbage Disposal (GE GFC320V)									$636.07
				Quantity		Unit Price		Factor		Total		
			Installation	2.00	x	249.98	x	1.1320	=	565.95		
			Demolition	1.00	x	61.94	x	1.1320	=	70.12		
			removal o existing and installation of new									

Subtotal for Section - 11 **$6,131.21**

Section - 12

149	12 36 61 19 0005	SF	1-1/4" Thick, Quartz Agglomerate Countertop With Backsplash									$6,914.26
				Quantity		Unit Price		Factor		Total		
			Installation	50.00	x	122.16	x	1.1320	=	6,914.26		
			25 LF of kitchen countertops									
150	12 36 61 19 0007	EA	Cutout For Sink And/Or Faucet In Quartz Agglomerate Countertop									$313.61
				Quantity		Unit Price		Factor		Total		
			Installation	2.00	x	138.52	x	1.1320	=	313.61		
			2 kitchen sinks									

Subtotal for Section - 12 **$7,227.87**

Section - 22

Work Order Number: 116758.00
Work Order Title: Fashion Park Unit 257 Conversion

Section - 22

151	22 01 40 81 0004	EA	Removal And Replacement Of Chrome Supply Lines To Sink/Lavatory, Pair								$297.60
				Quantity		Unit Price		Factor		Total	
			Installation	10.00	x	26.29	x	1.1320	=	297.60	
			replace supply lines in kitchens and bathrooms								
152	22 01 40 81 0006	EA	Removal And Replacement Of Double Bowl Sink/Lavatory Drain Line								$128.73
				Quantity		Unit Price		Factor		Total	
			Installation	2.00	x	56.86	x	1.1320	=	128.73	
			new drain lines								
153	22 11 16 00 0003	LF	3/4" Schedule 40 Threaded Galvanized Steel Pipe With 150 LB Malleable Iron Fitting AssemblyIncludes all hangers and all galvanized malleable iron fittings (couplings, elbows, tees and reducer fittings). All hangers are complete assemblies. Not for use where detail is available.								$7,127.07
				Quantity		Unit Price		Factor		Total	
			Installation	300.00	x	18.30	x	1.1320	=	6,214.68	
			Demolition	200.00	x	4.03	x	1.1320	=	912.39	
			gas line piping								
154	22 11 16 00 0901	LF	3/4" Inside Diameter Copper Pipe/Tubing Type L AssemblyIncludes all hangers and couplings, elbow, tee, reducer fittings. All hangers are complete assemblies. Not for use where detail is available.								$19,234.38
				Quantity		Unit Price		Factor		Total	
			Installation	650.00	x	24.17	x	1.1320	=	17,784.29	
			Demolition	350.00	x	3.66	x	1.1320	=	1,450.09	
			water line copper piping								
155	22 12 23 13 0002	EA	80 Gallon ASME Rated Tank, 150PSI, Jacketed, Insulated, Glass Lined Water Heater Storage Tank (TJ-80A)								$424.28
				Quantity		Unit Price		Factor		Total	
			Installation	0.00	x	2,141.02	x	1.1320	=	0.00	
			Demolition	1.00	x	374.81	x	1.1320	=	424.28	
			removal of existing water heater								
156	22 13 16 00 0509	LF	4" Schedule 40 Polyvinyl Chloride (PVC) DWV Pipe AssemblyIncludes all fittings, couplings and hangers. Fittings are assumed every 10'. Not for use where detail is available.								$20,147.62
				Quantity		Unit Price		Factor		Total	
			Installation	400.00	x	39.47	x	1.1320	=	17,872.02	
			Demolition	275.00	x	7.31	x	1.1320	=	2,275.60	
			Sewer and vent piping								
157	22 34 13 00 0011	EA	7.4 GPM, Outdoor Mount, Instantaneous, Tankless, Gas Domestic Water Heater (Rheem RTG-74XN)								$5,196.24
				Quantity		Unit Price		Factor		Total	
			Installation	2.00	x	2,295.16	x	1.1320	=	5,196.24	
			installation of 2 new water heaters								
158	22 41 16 16 0003	EA	33" x 21" x 6-1/2" Stainless Steel Kitchen Sink, Double Bowl, 20 Gauge (Elkay D233213)								$1,488.27
				Quantity		Unit Price		Factor		Total	
			Installation	2.00	x	607.23	x	1.1320	=	1,374.77	
			Demolition	1.00	x	100.27	x	1.1320	=	113.51	
			removal of existing and installation of new.								
159	22 41 39 00 0006	EA	Chrome Two Handle Kitchen Faucet With Spray, Three Hole Installation, 8" Center (Delta 2402LF-LHP+H215)								$454.33
				Quantity		Unit Price		Factor		Total	
			Installation	2.00	x	177.25	x	1.1320	=	401.29	
			Demolition	1.00	x	46.85	x	1.1320	=	53.03	
			removal of existing and installation of new.								

Contractor's Price Proposal - Detail Continues..

Work Order Number: 116758.00
Work Order Title: Fashion Park Unit 257 Conversion

Section - 22

160	22 42 13 13 0027	EA	2 Piece Tank Type, Pressure Assisted, Siphon Jet, Floor Mounted, Back Outlet, Handicap Accessible, Elongated Vitreous China Water Closet (American Standard Yorkville™ ADA)								$1,300.36
				Quantity		Unit Price		Factor		Total	
			Installation	1.00	x	1,051.28	x	1.1320	=	1,190.05	
			Demolition	1.00	x	97.45	x	1.1320	=	110.31	
			remove existing and install new ADA toilet								
161	22 42 16 13 0009	EA	27" x 20" Wheelchair Accessible, Vitreous China Wall Hung Lavatory (American Standard Wheel Chair Users)								$776.98
				Quantity		Unit Price		Factor		Total	
			Installation	1.00	x	623.60	x	1.1320	=	705.92	
			Demolition	1.00	x	62.78	x	1.1320	=	71.07	
			remove existing and install new ADA sink, faucet, and drain cover.								
162	22 42 19 00 0027	EA	3 Piece Tub/Shower Surrounds, 32" x 72" Side Walls, 48" x 72" Back, (Swanstone SK-324872)								$3,166.32
				Quantity		Unit Price		Factor		Total	
			Installation	1.00	x	2,797.10	x	1.1320	=	3,166.32	
			new tub/shower for ADA bathroom								
163	22 42 39 00 0042	EA	Single Supply EcoPower® Faucet, Polished Chrome Finish (Toto TEL3LS10#CP)								$709.36
				Quantity		Unit Price		Factor		Total	
			Installation	1.00	x	626.64	x	1.1320	=	709.36	
			ADA sink, faucet, and drain cover.								
164	22 42 39 00 0064	EA	Three Lever Handle, Chrome Shower And Tub Filler (American Standard Colony Soft 3375.502)								$293.63
				Quantity		Unit Price		Factor		Total	
			Installation	1.00	x	218.72	x	1.1320	=	247.59	
			Demolition	1.00	x	40.67	x	1.1320	=	46.04	
			per plans								
165	22 42 39 00 0210	EA	Lavatory Protective Enclosure (IPS Truebro Lav Shield)								$350.49
				Quantity		Unit Price		Factor		Total	
			Installation	2.00	x	154.81	x	1.1320	=	350.49	
			drain cover for ADA kitchen and bathroom sink								
166	22 42 39 00 0217	EA	1/2" NPT x 3/8" Compression Chrome, Quarter Turn Dual Angle Stop (SharkBite 25558)								$555.72
				Quantity		Unit Price		Factor		Total	
			Installation	10.00	x	41.22	x	1.1320	=	466.61	
			Demolition	8.00	x	9.84	x	1.1320	=	89.11	
			new angle stops installed in bathrooms and kitchens								

Subtotal for Section - 22 **$61,651.38**

Section - 23

167	23 05 93 00 0017	EA	Balancing HVAC Duct System, Floor Height Supply, Return, Exhaust, Register And Diffuser								$61.88
				Quantity		Unit Price		Factor		Total	
			Installation	1.00	x	54.66	x	1.1320	=	61.88	
			required setup, balancing, and charging for new system								
168	23 09 23 53 0284	EA	Scheduling Program, HVAC (AHU, RTU, AC Units, Etcetera) Programming Measures								$3,880.60
				Quantity		Unit Price		Factor		Total	
			Installation	1.00	x	3,428.09	x	1.1320	=	3,880.60	
			required setup, balancing, and charging for new system								

Contractor's Price Proposal - Detail Continues..

Work Order Number: 116758.00
Work Order Title: Fashion Park Unit 257 Conversion

Section - 23

169	23 31 13 16 0063	EA	4" Diameter, 26 Gauge, 2" WG And Less (Class C), Galvanized Sheet Metal Round And Flat-Oval Connector									$240.41
				Quantity		Unit Price		Factor		Total		
			Installation	14.00	x	15.17	x	1.1320	=	240.41		
			exhaust ducting for dyer per plans									
170	23 33 13 13 0006	EA	12" Diameter Radial Opposed Blade Damper Round, Steel Construction, Manual Operated									$140.78
				Quantity		Unit Price		Factor		Total		
			Installation	1.00	x	113.45	x	1.1320	=	128.43		
			Demolition	1.00	x	10.91	x	1.1320	=	12.35		
			HVAC per plans									
171	23 33 46 00 0008	LF	12" Diameter Flexible Duct, R8.0 Insulated With Polyester Inner Liner And Metallized Outer Jacket									$2,231.74
				Quantity		Unit Price		Factor		Total		
			Installation	100.00	x	15.36	x	1.1320	=	1,738.75		
			Demolition	130.00	x	3.35	x	1.1320	=	492.99		
			HVAC per plans									
172	23 33 46 00 0020	EA	12" Diameter Flexible Duct Collar, Spin In Type, Sheet Metal, With Damper									$100.97
				Quantity		Unit Price		Factor		Total		
			Installation	1.00	x	76.62	x	1.1320	=	86.73		
			Demolition	1.00	x	12.58	x	1.1320	=	14.24		
			HVAC per plans									
173	23 34 16 00 0127	EA	30" Diameter Wheel, 2 HP, 10,192 CFM At 1/4" Static Pressure, Belt Drive, Kitchen Upblast Exhaust Fan115/208-230/60/3. Includes heat baffle, grease baffle and disconnect switch.									$9,622.60
				Quantity		Unit Price		Factor		Total		
			Installation	2.00	x	4,153.39	x	1.1320	=	9,403.27		
			Demolition	1.00	x	193.75	x	1.1320	=	219.33		
			removal of one existing and installation of 2 new									
174	23 34 16 00 0275	EA	109 CFM, Ceiling/Wall Mounted, Metal Intake Grille, Heavy Duty/Continuous Operation Exhaust Fan (Broan® LoSone® Ventilator L100MG)									$897.54
				Quantity		Unit Price		Factor		Total		
			Installation	2.00	x	379.30	x	1.1320	=	858.74		
			Demolition	1.00	x	34.28	x	1.1320	=	38.80		
			exhaust fan per plans EF-1									
175	23 37 13 13 0080	EA	20" x 20" Single Deflection Return/Exhaust Register, Aluminum, Opposed Blade Damper, Wall/Ceiling									$319.70
				Quantity		Unit Price		Factor		Total		
			Installation	1.00	x	265.64	x	1.1320	=	300.70		
			Demolition	1.00	x	16.78	x	1.1320	=	18.99		
			HVAC per plans									
176	23 37 13 13 0225	EA	18" x 8" 4-Way Adjustable Wall Supply Grille, Adjustable Deflection, Aluminum Construction									$2,395.67
				Quantity		Unit Price		Factor		Total		
			Installation	7.00	x	275.90	x	1.1320	=	2,186.23		
			Demolition	11.00	x	16.82	x	1.1320	=	209.44		
			HVAC per plans									
177	23 54 16 13 0007	EA	120 MBH, 2,000 CFM Up/Horizontal Flow Multi-Speed, Two Stage 96% AFUE Gas FurnaceBlower cooling capacity up to 5 tons.									$5,879.99
				Quantity		Unit Price		Factor		Total		
			Installation	2.00	x	2,597.17	x	1.1320	=	5,879.99		
			per plans. SH-1 and SH-2 wall mounted furnaces									

Contractor's Price Proposal - Detail Continues..

Work Order Number: 116758.00
Work Order Title: Fashion Park Unit 257 Conversion

Section - 23

178	23 81 49 00 0020		EA	7-1/2 Ton Indoor Section Split Heat Pump Packaged Unit, Horizontal Upflow With 10 KW Electric Heat								$4,932.97
					Quantity		Unit Price		Factor		Total	
				Installation	1.00	x	4,047.74	x	1.1320	=	4,582.04	
				Demolition	1.00	x	310.01	x	1.1320	=	350.93	
				new furnace per clients request								

Subtotal for Section - 23 **$30,704.85**

Section - 26

179	26 01 20 91 0002		EA	Lock Out/Tag Out Local DisconnectExcludes tag or padlock See CSI section 26 01 20 91-0004 for padlock, 26 01 20 91-0005 for tag(s).								$523.83
					Quantity		Unit Price		Factor		Total	
				Installation	15.00	x	30.85	x	1.1320	=	523.83	
				LOTO of existing circuits								
180	26 05 19 16 0402		MLF	#12 AWG, 3 Conductors, 600 Volt, Type NM, Copper, Non-Metallic Sheathed Cable								$12,214.42
					Quantity		Unit Price		Factor		Total	
				Installation	4.00	x	2,697.53	x	1.1320	=	12,214.42	
				for new electrical runs per plans								
181	26 05 19 16 0402	0377		For Installation In Wood Stud Wall (Includes Drilling), Add								$1,272.82
					Quantity		Unit Price		Factor		Total	
				Installation	4.00	x	281.10	x	1.1320	=	1,272.82	
182	26 09 23 00 0109		EA	Wall Switch Replacement Occupancy Sensor, Single GangIncludes integral occupancy sensor and relay.								$1,204.00
					Quantity		Unit Price		Factor		Total	
				Installation	10.00	x	106.36	x	1.1320	=	1,204.00	
				per plans								
183	26 09 23 00 0235		EA	Passive Infrared, Wall Switch Mounted, Wired Occupancy Sensor (Encelium PW-100-24)Excludes GB II cable.								$586.31
					Quantity		Unit Price		Factor		Total	
				Installation	2.00	x	258.97	x	1.1320	=	586.31	
				for bathrooms								
184	26 24 13 00 0213		EA	800 Amperes, 480 Volt, 4 Wire, Switchboard Incoming No Switch Circuit								$5,781.11
					Quantity		Unit Price		Factor		Total	
				Installation	1.00	x	4,332.49	x	1.1320	=	4,904.38	
				Demolition	1.00	x	774.50	x	1.1320	=	876.73	
				for new main panel to new units subpanels								
185	26 24 16 00 0470		EA	200 Ampere Rating, Main Breaker, Indoor, 42 Circuit, 4 Wire, 120/208 Volt, Assembled Panelboard With 20 Ampere, 1 Pole Plug-In Breakers								$7,931.90
					Quantity		Unit Price		Factor		Total	
				Installation	2.00	x	3,075.97	x	1.1320	=	6,964.00	
				Demolition	1.00	x	855.04	x	1.1320	=	967.91	
				1 new sub panel for each unit								
186	26 27 13 00 0125		EA	Single Phase M-90 Meter, Socket, NEMA 3R Enclosure								$6,442.28
					Quantity		Unit Price		Factor		Total	
				Installation	6.00	x	905.76	x	1.1320	=	6,151.92	
				Demolition	5.00	x	51.30	x	1.1320	=	290.36	
				installation of new meters for building								
187	26 27 26 00 0009		EA	20 Amperes, 1 Gang, GFI, Duplex Receptacle Assembly								$3,825.42
					Quantity		Unit Price		Factor		Total	
				Installation	30.00	x	96.40	x	1.1320	=	3,273.74	
				Demolition	15.00	x	32.49	x	1.1320	=	551.68	
				All new GFI outlets throughout per clients request								

Contractor's Price Proposal - Detail Continues..

Work Order Number: 116758.00
Work Order Title: Fashion Park Unit 257 Conversion

Section - 26

188	26 27 26 00 0125		EA	20 Amperes, 125 Volt Single Specification Grade Tamper Resistant ReceptaclePass & Seymour TR5351.									$1,944.32
					Quantity		Unit Price		Factor		Total		
				Installation	40.00	x	34.39	x	1.1320	=	1,557.18		
				Demolition	40.00	x	8.55	x	1.1320	=	387.14		
				all new outlets throughout per clients request									
189	26 27 26 00 0138		EA	1 Gang, 20 Amperes, 120/277 Volt, SPST, Switch Assembly									$3,327.23
					Quantity		Unit Price		Factor		Total		
				Installation	25.00	x	85.08	x	1.1320	=	2,407.76		
				Demolition	25.00	x	32.49	x	1.1320	=	919.47		
				25 switches total in both units									
190	26 51 19 00 0312		EA	8" Diameter, 1,200 Lumens, Recessed LED Downlight With Open Trim (Lithonia DOM8 LED)									$7,780.09
					Quantity		Unit Price		Factor		Total		
				Installation	19.00	x	324.11	x	1.1320	=	6,970.96		
				Demolition	19.00	x	37.62	x	1.1320	=	809.13		
				19 new slim LED lights per plans and owners request									
191	26 51 19 00 0312	0543	EA	For Dimming Driver And Sensor Switch nLight Dimming Relay, Add									$1,339.77
					Quantity		Unit Price		Factor		Total		
				Installation	17.00	x	69.62	x	1.1320	=	1,339.77		
192	26 51 19 00 0430		EA	5” Shallow, Insulated Ceiling, Air-Tite New Construction (Cooper Halo H25ICAT)									$314.84
					Quantity		Unit Price		Factor		Total		
				Installation	3.00	x	92.71	x	1.1320	=	314.84		
				3 new 5" slim LED lights per plans									
193	26 51 19 00 0470		EA	2-1/2" Diameter x 15-1/2" High, Polished Nickel, LED Wall Sconce (Hudson Valley Lighting SHAW 1200-PN)									$1,017.22
					Quantity		Unit Price		Factor		Total		
				Installation	2.00	x	415.10	x	1.1320	=	939.79		
				Demolition	2.00	x	34.20	x	1.1320	=	77.43		
				2 new wall sconces per plans in bathrooms									
194	26 56 19 00 0031		EA	9,503 Lumens, 77 Watt, 3 LEDs, Wall Mounted Security Fixture (Jarvis Corp WMFT-350)									$1,530.14
					Quantity		Unit Price		Factor		Total		
				Installation	3.00	x	388.10	x	1.1320	=	1,317.99		
				Demolition	3.00	x	62.47	x	1.1320	=	212.15		
				replace 3 existing exterior lights per clients request									

Subtotal for Section - 26 **$57,035.70**

Section - 31

195	31 05 16 00 0002		CY	#2 Stone Aggregate Fill (1-1/2" To 2-1/2" Clean)									$1,295.01
					Quantity		Unit Price		Factor		Total		
				Installation	25.00	x	45.76	x	1.1320	=	1,295.01		
				4" deep, 200 LF, 2' wide base for backfill for trenching. 20 CY for footings, and slabs									
196	31 05 16 00 0002	0053		For Up To 8, Add									$51.79
					Quantity		Unit Price		Factor		Total		
				Installation	5.00	x	9.15	x	1.1320	=	51.79		
197	31 11 00 00 0008		ACR	Clearing By Machine - Light Brush Without Grub									$174.72
					Quantity		Unit Price		Factor		Total		
				Installation	0.50	x	308.69	x	1.1320	=	174.72		
				clear out weeds in back yard									

Contractor's Price Proposal - Detail Continues..

Work Order Number: 116758.00
Work Order Title: Fashion Park Unit 257 Conversion

Section - 31

198	31 11 00 00 0017	CY	Hand Loading Of Cleared And Grubbed Material								$849.91
				Quantity		Unit Price		Factor		Total	
			Installation	20.00	x	37.54	x	1.1320	=	849.91	
			clear out weeds in back yard								
199	31 23 16 13 0007	CY	Excavation For Trenching By Hand In SoilIncludes stockpiling excess materials and trimming sides and bottom of trench.								$3,505.24
				Quantity		Unit Price		Factor		Total	
			Installation	25.00	x	123.86	x	1.1320	=	3,505.24	
			20" deep, 200 LF, 2' wide								
200	31 23 16 13 0011	CY	Backfilling or Placing Subbase for Trenches with Imported or Stockpiled Materials by Hand								$973.80
				Quantity		Unit Price		Factor		Total	
			Installation	25.00	x	34.41	x	1.1320	=	973.80	
			20" deep, 200 LF, 2' wide								
201	31 23 16 13 0014	CY	Compaction of Fill or Subbase for Trenches by Hand								$1,098.61
				Quantity		Unit Price		Factor		Total	
			Installation	25.00	x	38.82	x	1.1320	=	1,098.61	
			20" deep, 200 LF, 2' wide								
202	31 23 16 36 0009	CY	Excavation For Building Foundations And Other Structures By Hand in Soil								$6,309.43
				Quantity		Unit Price		Factor		Total	
			Installation	45.00	x	123.86	x	1.1320	=	6,309.43	
			for footings and slab								
203	31 23 16 36 0019	CY	Backfilling Around Building Foundations And Other Structures By Hand								$1,335.53
				Quantity		Unit Price		Factor		Total	
			Installation	20.00	x	58.99	x	1.1320	=	1,335.53	
			for footings and slab								
204	31 23 16 36 0022	CY	Compaction Of Fill Or Subbase For Building Foundations and Other Structures by Hand								$1,976.98
				Quantity		Unit Price		Factor		Total	
			Installation	45.00	x	38.81	x	1.1320	=	1,976.98	
			for footings and slab								

Subtotal for Section - 31 **$17,571.02**

Section - 32

205	32 16 13 13 0016	LF	6" x 12" Cast In Place Concrete Gutter With 6" Curb And Face - Straight								$609.07
				Quantity		Unit Price		Factor		Total	
			Installation	15.00	x	24.92	x	1.1320	=	423.14	
			Demolition	15.00	x	10.95	x	1.1320	=	185.93	
			for parking lot ADA modifications								
206	32 16 23 00 0002	SF	4" Cast In Place Concrete Sidewalk								$586.15
				Quantity		Unit Price		Factor		Total	
			Installation	60.00	x	8.63	x	1.1320	=	586.15	
			for parking lot ADA modifications								
207	32 16 23 00 0002 0094		For Up To 100, Add								$248.59
				Quantity		Unit Price		Factor		Total	
			Installation	60.00	x	3.66	x	1.1320	=	248.59	
208	32 16 23 00 0008	EA	Finish Concrete Handicap Drop Section In SidewalkExcludes patterned (tactile) finish.								$145.65
				Quantity		Unit Price		Factor		Total	
			Installation	1.00	x	128.67	x	1.1320	=	145.65	
			for parking lot ADA modifications								

Contractor's Price Proposal - Detail Continues..

Work Order Number: 116758.00
Work Order Title: Fashion Park Unit 257 Conversion

Section - 32

209	32 17 23 13 0074	SF	Solid Area, Painted Pavement Marking For Parking AreasUse task for lines >12" wide, stop bars, transverse lines, diagonal lines, crossing lanes, etc.									$281.82
				Quantity		Unit Price		Factor		Total		
			Installation	64.00	x	3.89	x	1.1320	=	281.82		
			for parking lot ADA modifications									
210	32 17 23 13 0088	EA	Handicap Symbol For Van Parking Stalls, Painted Pavement Marking For Parking AreasApproximate overall dimensions: 4-1/3' width x 5' height. White or blue symbol. Excludes striping.									$86.15
				Quantity		Unit Price		Factor		Total		
			Installation	2.00	x	38.05	x	1.1320	=	86.15		
			for parking lot ADA modifications									
211	32 17 26 00 0003	SF	Embedded, VPC Truncated Dome Detectable Warning SurfaceAlso raised strips or directional bars. All colors.									$832.25
				Quantity		Unit Price		Factor		Total		
			Installation	16.00	x	45.95	x	1.1320	=	832.25		
			new truncated domes per A-501									
212	32 31 23 00 0006	LF	6' High Privacy Tongue And Groove Vinyl Fence									$3,593.82
				Quantity		Unit Price		Factor		Total		
			Installation	45.00	x	63.16	x	1.1320	=	3,217.37		
			Demolition	45.00	x	7.39	x	1.1320	=	376.45		
			removal of existing vinyl fence and installation of new due to ADA width requirements . includes a 4' wide ADA gate									
213	32 31 23 00 0051	EA	6' High x 4' Wide Vinyl Gate For Privacy Or Semi-Privacy Fence And Hinge Set									$757.38
				Quantity		Unit Price		Factor		Total		
			Installation	1.00	x	611.32	x	1.1320	=	692.01		
			Demolition	1.00	x	57.74	x	1.1320	=	65.36		
			removal of existing vinyl fence and installation of new due to ADA width requirements . includes a 4' wide ADA gate									
214	32 31 23 00 0078	EA	Stainless Steel Latch Set									$124.46
				Quantity		Unit Price		Factor		Total		
			Installation	1.00	x	109.95	x	1.1320	=	124.46		
			removal of existing vinyl fence and installation of new due to ADA width requirements . includes a 4' wide ADA gate									

Subtotal for Section - 32 **$7,265.34**

Proposal Total **$610,749.96**

This total represents the correct total for the proposal. Any discrepancy between line totals, sub-totals and the proposal total is due to rounding.

The Percentage of NPP on this Proposal: **%**

GORDIAN®

Subcontractor Listing

Date: June 06, 2023

Re:

IQC Master Contract #:	CA-R7-GB06-123021-MDJ
Work Order #:	116758.00
Owner PO #:	
Title:	Fashion Park Unit 257 Conversion
Contractor:	MDJ Management
Proposal Value:	$610,749.96

Name of Contractor	Duties	Amount	%
Janus Corporation		$100,000.00	16.37
Refined Construction		$450,000.00	73.68

General Conditions for Construction Contracts - Public Housing Programs

U.S. Department of Housing and Urban Development
Office of Public and Indian Housing
OMB Approval No. 2577-0157 (exp. 11/30/2023)

Applicability. This form is applicable to any construction/development contract greater than $250,000.

Public reporting burden for this collection of information is estimated to average 1 hour. This includes the time for collecting, reviewing, and reporting the data. The information requested is required to obtain a benefit. This form includes those clauses required by OMB's common rule on grantee procurement, implemented at HUD in 2 CFR 200, and those requirements set forth in Section 3 of the Housing and Urban Development Act of 1968 and its amendment by the Housing and Community Development Act of 1992, implemented by HUD at 24 CFR Part 75. The form is required for construction contracts awarded by Public Housing Agencies (PHAs). The form is used by Housing Authorities in solicitations to provide necessary contract clauses. If the form were not used, PHAs would be unable to enforce their contracts. There are no assurances of confidentiality. HUD may not conduct or sponsor, and an applicant is not required to respond to a collection of information unless it displays a currently valid OMB control number.

	Clause	Page		Clause	Page
1.	Definitions	2		**Administrative Requirements**	
2.	Contractor's Responsibility for Work	2	25.	Contract Period	9
3.	Architect's Duties, Responsibilities and Authority	2	26.	Order of Precedence	9
4.	Other Contracts	3	27.	Payments	9
	Construction Requirements		28.	Contract Modifications	10
5.	Preconstruction Conference and Notice to Proceed	3	29.	Changes	10
6.	Construction Progress Schedule	3	30.	Suspension of Work	11
7.	Site Investigation and Conditions Affecting the Work	3	31.	Disputes	11
8.	Differing Site Conditions	4	32.	Default	11
9.	Specifications and Drawings for Construction	4	33.	Liquidated	12
10.	As-Built Drawings	5	34.	Termination of Convenience	12
11.	Material and Workmanship	5	35.	Assignment of Contract	12
12.	Permits and Codes	5	36.	Insurance	12
13.	Health, Safety, and Accident Prevention	6	37.	Subcontracts	13
14.	Temporary Buildings and Transportation Materials	6	38.	Subcontracting with Small and Minority Firms, Women's Business Enterprise, and Labor Surplus Area Firms	13
15.	Availability and Use of Utility Services	6	39.	Equal Employment Opportunity	13
16.	Protection of Existing Vegetation, Structures, Equipment, Utilities, and Improvements	6	40.	Employment, Training, and Contracting Opportunities for Low-Income Persons, Section 3 of the Housing and Urban Development Act of 1968	14
17.	Temporary Buildings and Transportation Materials	7	41.	Interest of Members of Congress	15
18.	Clean Air and Water	7	42.	Interest of Members, Officers, or Employees and Former Members, Officers, or Employees	15
19.	Energy Efficiency	7	43.	Limitations on Payments Made to Influence	15
20.	Inspection and Acceptance of Construction	7	44.	Royalties and Patents	15
21.	Use and Possession Prior to	8	45.	Examination and Retention of Contractor's Records	15
22.	Warranty of Title	8	46.	Labor Standards-Davis-Bacon and Related Acts	15
23.	Warranty of	8	47.	Non-Federal Prevailing Wage Rates	19
24.	Prohibition Against Liens	9	48.	Procurement of Recovered Materials	19

1. Definitions

(a) "Architect" means the person or other entity engaged by the PHA to perform architectural, engineering, design, and other services related to the work as provided for in the contract. When a PHA uses an engineer to act in this capacity, the terms "architect" and "engineer" shall be synonymous. The Architect shall serve as a technical representative of the Contracting Officer. The Architect's authority is as set forth elsewhere in this contract.

(b) "Contract" means the contract entered into between the PHA and the Contractor. It includes the forms of Bid, the Bid Bond, the Performance and Payment Bond or Bonds or other assurance of completion, the Certifications, Representations, and Other Statements of Bidders (form HUD-5370), these General Conditions of the Contract for Construction (form HUD-5370), the applicable wage rate determinations from the U.S. Department of Labor, any special conditions included elsewhere in the contract, the specifications, and drawings. It includes all formal changes to any of those documents by addendum, change order, or other modification.

(c) "Contracting Officer" means the person delegated the authority by the PHA to enter into, administer, and/or terminate this contract and designated as such in writing to the Contractor. The term includes any successor Contracting Officer and any duly authorized representative of the Contracting Officer also designated in writing. The Contracting Officer shall be deemed the authorized agent of the PHA in all dealings with the Contractor.

(d) "Contractor" means the person or other entity entering into the contract with the PHA to perform all of the work required under the contract.

(e) "Drawings" means the drawings enumerated in the schedule of drawings contained in the Specifications and as described in the contract clause entitled Specifications and Drawings for Construction herein.

(f) "HUD" means the United States of America acting through the Department of Housing and Urban Development including the Secretary, or any other person designated to act on its behalf. HUD has agreed, subject to the provisions of an Annual Contributions Terms and Conditions (ACC), to provide financial assistance to the PHA, which includes assistance in financing the work to be performed under this contract. As defined elsewhere in these General Conditions or the contract documents, the determination of HUD may be required to authorize changes in the work or for release of funds to the PHA for payment to the Contractor. Notwithstanding HUD's role, nothing in this contract shall be construed to create any contractual relationship between the Contractor and HUD.

(g) "Project" means the entire project, whether construction or rehabilitation, the work for which is provided for in whole or in part under this contract.

(h) "PHA" means the Public Housing Agency organized under applicable state laws which is a party to this contract.

(j) "Specifications" means the written description of the technical requirements for construction and includes the criteria and tests for determining whether the requirements are met.

(l) "Work" means materials, workmanship, and manufacture and fabrication of components.

2. Contractor's Responsibility for Work

(a) The Contractor shall furnish all necessary labor, materials, tools, equipment, and transportation necessary for performance of the work. The Contractor shall also furnish all necessary water, heat, light, and power not made available to the Contractor by the PHA pursuant to the clause entitled Availability and Use of Utility Services herein.

(b) The Contractor shall perform on the site, and with its own organization, work equivalent to at least [ ] (12 percent unless otherwise indicated) of the total amount of work to be performed under the order. This percentage may be reduced by a supplemental agreement to this order if, during performing the work, the Contractor requests a reduction and the Contracting Officer determines that the reduction would be to the advantage of the PHA.

(c) At all times during performance of this contract and until the work is completed and accepted, the Contractor shall directly superintend the work or assign and have on the work site a competent superintendent who is satisfactory to the Contracting Officer and has authority to act for the Contractor.

(d) The Contractor shall be responsible for all damages to persons or property that occur as a result of the Contractor's fault or negligence, and shall take proper safety and health precautions to protect the work, the workers, the public, and the property of others. The Contractor shall hold and save the PHA, its officers and agents, free and harmless from liability of any nature occasioned by the Contractor's performance. The Contractor shall also be responsible for all materials delivered and work performed until completion and acceptance of the entire work, except for any completed unit of work which may have been accepted under the contract.

(e) The Contractor shall lay out the work from base lines and bench marks indicated on the drawings and be responsible for all lines, levels, and measurements of all work executed under the contract. The Contractor shall verify the figures before laying out the work and will be held responsible for any error resulting from its failure to do so.

(f) The Contractor shall confine all operations (including storage of materials) on PHA premises to areas authorized or approved by the Contracting Officer.

(g) The Contractor shall at all times keep the work area, including storage areas, free from accumulations of waste materials. After completing the work and before final inspection, the Contractor shall (1) remove from the premises all scaffolding, equipment, tools, and materials (including rejected materials) that are not the property of the PHA and all rubbish caused by its work; (2) leave the work area in a clean, neat, and orderly condition satisfactory to the Contracting Officer; (3) perform all specified tests; and, (4) deliver the installation in complete and operating condition.

(h) The Contractor's responsibility will terminate when all work has been completed, the final inspection made, and the work accepted by the Contracting Officer. The Contractor will then be released from further obligation except as required by the warranties specified elsewhere in the contract.

3. Architect's Duties, Responsibilities, and Authority

(a) The Architect for this contract, and any successor, shall be designated in writing by the Contracting Officer.

(b) The Architect shall serve as the Contracting Officer's technical representative with respect to architectural, Schedule engineering, and design matters related to the work performed under the contract. The Architect may provide direction on contract performance. Such direction shall be within the scope of the contract and may not be of a nature which: (1) institutes additional work outside the scope of the contract; (2) constitutes a change as defined in the Changes clause herein; (3) causes an increase or decrease in the cost of the contract; (4) alters the Construction Progress Schedule; or (5) changes any of the other express terms or conditions of the contract.

(c) The Architect's duties and responsibilities may include but shall not be limited to:

(1) Making periodic visits to the work site, and on the basis of his/her on-site inspections, issuing written reports to the PHA which shall include all observed deficiencies. The Architect shall file a copy of the report with the Contractor's designated representative at the site;

(2) Making modifications in drawings and technical specifications and assisting the Contracting Officer in the preparation of change orders and other contract modifications for issuance by the Contracting Officer;

(3) Reviewing and making recommendations with respect to - (i) the Contractor's construction progress schedules; (ii) the Contractor's shop and detailed drawings; (iii) the machinery, mechanical and other equipment and materials or other articles proposed for use by the Contractor; and, (iv) the Contractor's price breakdown and progress payment estimates; and,

(4) Assisting in inspections, signing Certificates of Completion, and making recommendations with respect to acceptance of work completed under the contract.

4. Other Contracts

The PHA may undertake or award other contracts for additional work at or near the site of the work under this contract. The Contractor shall fully cooperate with the other contractors and with PHA employees and shall carefully adapt scheduling and performing the work under this contract to accommodate the additional work, heeding any direction that may be provided by the Contracting Officer. The Contractor shall not commit or permit any act that will interfere with the performance of work by any other contractor or by PHA employees

Construction Requirements

5. Pre-construction Conference and Notice to Proceed

(a) Within ten calendar days of contract execution, and prior to the commencement of work, the Contractor shall attend a preconstruction conference with representatives of the PHA, its Architect, and other interested parties convened by the PHA. The conference will serve to acquaint the participants with the general plan of the construction operation and all other requirements of the contract. The PHA will provide the Contractor with the date, time, and place of the conference.

(b) The contractor shall begin work upon receipt of a written Notice to Proceed from the Contracting Officer or designee. The Contractor shall not begin work prior to receiving such notice.

6. Construction Progress

(a) The Contractor shall, within five days after the work commences on the contract or another period of time determined by the Contracting Officer, prepare and submit to the Contracting Officer for approval three copies of a practicable schedule showing the order in which the Contractor proposes to perform the work, and the dates on which the Contractor contemplates starting and completing the several salient features of the work (including acquiring labor, materials, and equipment). The schedule shall be in the form of a progress chart of suitable scale to indicate appropriately the percentage of work scheduled for completion by any given date during the period. If the Contractor fails to submit a schedule within the time prescribed, the Contracting Officer may withhold approval of progress payments or take other remedies under the contract until the Contractor submits the required schedule.

(b) The Contractor shall enter the actual progress on the chart as required by the Contracting Officer, and immediately deliver three copies of the annotated schedule to the Contracting Officer. If the Contracting Officer determines, upon the basis of inspection conducted pursuant to the clause entitled Inspection and Acceptance of Construction, herein that the Contractor is not meeting the approved schedule, the Contractor shall take steps necessary to improve its progress, including those that may be required by the Contracting Officer, without additional cost to the PHA. In this circumstance, the Contracting Officer may require the Contractor to increase the number of shifts, overtime operations, days of work, and/or the amount of construction plant, and to submit for approval any supplementary schedule or schedules in chart form as the Contracting Officer deems necessary to demonstrate how the approved rate of progress will be regained.

(c) Failure of the Contractor to comply with the requirements of the Contracting Officer under this clause shall be grounds for a determination by the Contracting Officer that the Contractor is not prosecuting the work with sufficient diligence to ensure completion within the time specified in the Contract. Upon making this determination, the Contracting Officer may terminate the Contractor's right to proceed with the work, or any separable part of it, in accordance with the Default clause of this contract.

7. Site Investigation and Conditions Affecting the Work

(a) The Contractor acknowledges that it has taken steps reasonably necessary to ascertain the nature and location of the work, and that it has investigated and satisfied itself as to the general and local conditions which can affect the work or its cost, including but not limited to, (1) conditions bearing upon transportation, disposal, handling, and storage of materials; (2) the availability of labor, water, electric power, and roads;(3) uncertainties of weather, river stages, tides, or similar physical conditions at the site; (4) the conformation and conditions of the ground; and (5) the character of equipment and facilities needed preliminary to and during work performance. The Contractor also acknowledges that it has satisfied itself as to the character, quality, and quantity of surface and subsurface materials or obstacles to be encountered insofar as this information is

reasonably ascertainable from an inspection of the site, including all exploratory work done by the PHA, as well as from the drawings and specifications made a part of this contract. Any failure of the Contractor to take the actions described and acknowledged in this paragraph will not relieve the Contractor from responsibility for estimating properly the difficulty and cost of successfully performing the work, or for proceeding to successfully perform the work without additional expense to the PHA.

(b) The PHA assumes no responsibility for any conclusions or interpretations made by the Contractor based on the information made available by the PHA. Nor does the PHA assume responsibility for any understanding reached or representation made concerning conditions which can affect the work by any of its officers or agents before the execution of this contract, unless that understanding or representation is expressly stated in this contract.

8. Differing Site Conditions

(a) The Contractor shall promptly, and before the conditions are disturbed, give a written notice to the Contracting Officer of (1) subsurface or latent physical conditions at the site which differ materially from those indicated in this contract, or (2) unknown physical conditions at the site(s), of an unusual nature, which differ materially from those ordinarily encountered and generally recognized as inhering in work of the character provided for in the contract.

(b) The Contracting Officer shall investigate the site conditions promptly after receiving the notice. Work shall not proceed at the affected site, except at the Contractor's risk, until the Contracting Officer has provided written instructions to the Contractor. If the conditions do materially so differ and cause an increase or decrease in the Contractor's cost of, or the time required for, performing any part of the work under this contract, whether or not changed as a result of the conditions, the Contractor shall file a claim in writing to the PHA within ten days after receipt of such instructions and, in any event, before proceeding with the work. An equitable adjustment in the contract price, the delivery schedule, or both shall be made under this clause and the contract modified in writing accordingly.

(c) No request by the Contractor for an equitable adjustment to the contract under this clause shall be allowed, unless the Contractor has given the written notice required; provided, that the time prescribed in (a) above for giving written notice may be extended by the Contracting Officer.

(d) No request by the Contractor for an equitable adjustment to the contract for differing site conditions shall be allowed if made after final payment under this contract.

9. Specifications and Drawings for Construction

(a) The Contractor shall keep on the work site a copy of the drawings and specifications and shall at all times give the Contracting Officer access thereto. Anything mentioned in the specifications and not shown on the drawings, or shown on the drawings and not mentioned in the specifications, shall be of like effect as if shown or mentioned in both. In case of difference between drawings and specifications, the specifications shall govern. In case of discrepancy in the figures, in the drawings, or in the specifications, the matter shall be promptly submitted to the Contracting Officer, who shall promptly make a determination in writing. Any adjustment by the Contractor without such a determination shall be at its own risk and expense. The Contracting Officer shall furnish from time to time such detailed drawings and other information as considered necessary, unless otherwise provided.

(b) Wherever in the specifications or upon the drawings the words "directed", "required", "ordered", "designated", "prescribed", or words of like import are used, it shall be understood that the "direction", "requirement", "order", "designation", or "prescription", of the Contracting Officer is intended and similarly the words "approved", "acceptable", "satisfactory", or words of like import shall mean "approved by", or "acceptable to", or "satisfactory to" the Contracting Officer, unless otherwise expressly stated.

(c) Where "as shown" "as indicated", "as detailed", or words of similar import are used, it shall be understood that the reference is made to the drawings accompanying this contract unless stated otherwise. The word "provided" as used herein shall be understood to mean "provide complete in place" that is "furnished and installed".

(d) "Shop drawings" means drawings, submitted to the PHA by the Contractor, subcontractor, or any lower tier subcontractor, showing in detail (1) the proposed fabrication and assembly of structural elements and (2) the installation (i.e., form, fit, and attachment details) of materials of equipment. It includes drawings, diagrams, layouts, schematics, descriptive literature, illustrations, schedules, performance and test data, and similar materials furnished by the Contractor to explain in detail specific portions of the work required by the contract. The PHA may duplicate, use, and disclose in any manner and for any purpose shop drawings delivered under this contract.

(e) If this contract requires shop drawings, the Contractor shall coordinate all such drawings, and review them for accuracy, completeness, and compliance with other contract requirements and shall indicate its approval thereon as evidence of such coordination and review. Shop drawings submitted to the Contracting Officer without evidence of the Contractor's approval may be returned for resubmission. The Contracting Officer will indicate an approval or disapproval of the shop drawings and if not approved as submitted shall indicate the PHA's reasons therefore. Any work done before such approval shall be at the Contractor's risk. Approval by the Contracting Officer shall not relieve the Contractor from responsibility for any errors or omissions in such drawings, nor from responsibility for complying with the requirements of this contract, except with respect to variations described and approved in accordance with (f) below.

(f) If shop drawings show variations from the contract requirements, the Contractor shall describe such variations in writing, separate from the drawings, at the time of submission. If the Architect approves any such variation and the Contracting Officer concurs, the Contracting Officer shall issue an appropriate modification to the contract, except that, if the variation is minor or does not involve a change in price or in time of performance, a modification need not be issued.

(g) It shall be the responsibility of the Contractor to make timely requests of the PHA for such large scale and full size drawings, color schemes, and other additional information, not already in his possession, which shall be

required in the planning and production of the work. Such requests may be submitted as the need arises, but each such request shall be filed in ample time to permit appropriate action to be taken by all parties involved so as to avoid delay.

(h) The Contractor shall submit to the Contracting Officer for approval four copies (unless otherwise indicated) of all shop drawings as called for under the various headings of these specifications. Three sets (unless otherwise indicated) of all shop drawings, will be retained by the PHA and one set will be returned to the Contractor. As required by the Contracting Officer, the Contractor, upon completing the work under this contract, shall furnish a complete set of all shop drawings as finally approved. These drawings shall show all changes and revisions made up to the time the work is completed and accepted.

(i) This clause shall be included in all subcontracts at any tier. It shall be the responsibility of the Contractor to ensure that all shop drawings prepared by subcontractors are submitted to the Contracting Officer.

10. As-Built Drawings

(a) "As-built drawings," as used in this clause, means drawings submitted by the Contractor or subcontractor at any tier to show the construction of a particular structure or work as actually completed under the contract. "As-built drawings" shall be synonymous with "Record drawings."

(b) As required by the Contracting Officer, the Contractor shall provide the Contracting Officer accurate information to be used in the preparation of permanent as-built drawings. For this purpose, the Contractor shall record on one set of contract drawings all changes from the installations originally indicated, and record final locations of underground lines by depth from finish grade and by accurate horizontal offset distances to permanent surface improvements such as buildings, curbs, or edges of walks.

(c) This clause shall be included in all subcontracts at any tier. It shall be the responsibility of the Contractor to ensure that all as-built drawings prepared by subcontractors are submitted to the Contracting Officer.

11. Material and Workmanship

(a) All equipment, material, and articles furnished under this contract shall be new and of the most suitable grade for the purpose intended, unless otherwise specifically provided in this contract. References in the contract to equipment, material, articles, or patented processes by trade name, make, or catalog number, shall be regarded as establishing a standard of quality and shall not be construed as limiting competition. The Contractor may, at its option, use any equipment, material, article, or process that, in the judgment of, and as approved by the Contracting Officer, is equal to that named in the specifications, unless otherwise specifically provided in this contract.

(b) Approval of equipment and materials.

(1) The Contractor shall obtain the Contracting Officer's approval of the machinery and mechanical and other equipment to be incorporated into the work. When requesting approval, the Contractor shall furnish to the Contracting Officer the name of the manufacturer, the model number, and other information concerning the performance, capacity, nature, and rating of the machinery and mechanical and other equipment. When required by this contract or by the Contracting Officer, the Contractor shall also obtain the Contracting Officer's approval of the material or articles which the Contractor contemplates incorporating into the work. When requesting approval, the Contractor shall provide full information concerning the material or articles. Machinery, equipment, material, and articles that do not have the required approval shall be installed or used at the risk of subsequent rejection.

(2) When required by the specifications or the Contracting Officer, the Contractor shall submit appropriately marked samples (and certificates related to them) for approval at the Contractor's expense, with all shipping charges prepaid. The Contractor shall label, or otherwise properly mark on the container, the material or product represented, its place of origin, the name of the producer, the Contractor's name, and the identification of the construction project for which the material or product is intended to be used.

(3) Certificates shall be submitted in triplicate, describing each sample submitted for approval and certifying that the material, equipment or accessory complies with contract requirements. The certificates shall include the name and brand of the product, name of manufacturer, and the location where produced.

(4) Approval of a sample shall not constitute a waiver of the PHA right to demand full compliance with contract requirements. Materials, equipment and accessories may be rejected for cause even though samples have been approved.

(5) Wherever materials are required to comply with recognized standards or specifications, such specifications shall be accepted as establishing the technical qualities and testing methods, but shall not govern the number of tests required to be made nor modify other contract requirements. The Contracting Officer may require laboratory test reports on items submitted for approval or may approve materials on the basis of data submitted in certificates with samples. Check tests will be made on materials delivered for use only as frequently as the Contracting Officer determines necessary to insure compliance of materials with the specifications. The Contractor will assume all costs of retesting materials which fail to meet contract requirements and/or testing materials offered in substitution for those found deficient.

(6) After approval, samples will be kept in the Project office until completion of work. They may be built into the work after a substantial quantity of the materials they represent has been built in and accepted.

(c) Requirements concerning lead-based paint. The Contractor shall comply with the requirements concerning lead-based paint contained in the Lead-Based Paint Poisoning Prevention Act (42 U.S.C. 4821-4846) as implemented by 24 CFR Part 35.

12. Permits and Codes

(a) The Contractor shall give all notices and comply with all applicable laws, ordinances, codes, rules and regulations. Notwithstanding the requirement of the Contractor to comply with the drawings and specifications in the contract, all work installed shall comply with all applicable codes and regulations as amended by any

waivers. Before installing the work, the Contractor shall examine the drawings and the specifications for compliance with applicable codes and regulations bearing on the work and shall immediately report any discrepancy it may discover to the Contracting Officer. Where the requirements of the drawings and specifications fail to comply with the applicable code or regulation, the Contracting Officer shall modify the contract by change order pursuant to the clause entitled Changes herein to conform to the code or regulation.

(b) The Contractor shall secure and pay for all permits, fees, and licenses necessary for the proper execution and completion of the work. Where the PHA can arrange for the issuance of all or part of these permits, fees and licenses, without cost to the Contractor, the contract amount shall be reduced accordingly.

13. Health, Safety, and Accident Prevention

(a) In performing this contract, the Contractor shall:

(1) Ensure that no laborer or mechanic shall be required to work in surroundings or under working conditions which are unsanitary, hazardous, or dangerous to his/her health and/or safety as determined under construction safety and health standards promulgated by the Secretary of Labor by regulation;

(2) Protect the lives, health, and safety of other persons;

(3) Prevent damage to property, materials, supplies, and equipment; and,

(4) Avoid work interruptions.

(b) For these purposes, the Contractor shall:

(1) Comply with regulations and standards issued by the Secretary of Labor at 29 CFR Part 1926. Failure to comply may result in imposition of sanctions pursuant to the Contract Work Hours and Safety Standards Act (Public Law 91-54, 83 Stat. 96), 40 U.S.C. 3701 et seq.; and

(2) Include the terms of this clause in every subcontract so that such terms will be binding on each subcontractor.

(c) The Contractor shall maintain an accurate record of exposure data on all accidents incident to work performed under this contract resulting in death, traumatic injury, occupational disease, or damage to property, materials, supplies, or equipment, and shall report this data in the manner prescribed by 29 CFR Part 1904.

(d) The Contracting Officer shall notify the Contractor of any noncompliance with these requirements and of the corrective action required. This notice, when delivered to the Contractor or the Contractor's representative at the site of the work, shall be deemed sufficient notice of the noncompliance and corrective action required. After receiving the notice, the Contractor shall immediately take corrective action. If the Contractor fails or refuses to take corrective action promptly, the Contracting Officer may issue an order stopping all or part of the work until satisfactory corrective action has been taken. The Contractor shall not base any claim or request for equitable adjustment for additional time or money on any stop order issued under these circumstances.

(e) The Contractor shall be responsible for its subcontractors' compliance with the provisions of this clause. The Contractor shall take such action with respect to any subcontract as the PHA, the Secretary of Housing and Urban Development, or the Secretary of Labor shall direct as a means of enforcing such provisions.

14. Temporary Heating

The Contractor shall provide and pay for temporary heating, covering, and enclosures necessary to properly protect all work and materials against damage by dampness and cold, to dry out the work, and to facilitate the completion of the work. Any permanent heating equipment used shall be turned over to the PHA in the condition and at the time required by the specifications.

15. Availability and Use of Utility Services

(a) The PHA shall make all reasonably required amounts of utilities available to the Contractor from existing outlets and supplies, as specified in the contract. Unless otherwise provided in the contract, the amount of each utility service consumed shall be charged to or paid for by the Contractor at prevailing rates charged to the PHA or, where the utility is produced by the PHA, at reasonable rates determined by the Contracting Officer. The Contractor shall carefully conserve any utilities furnished without charge.

(b) The Contractor, at its expense and in a manner satisfactory to the Contracting Officer, shall install and maintain all necessary temporary connections and distribution lines, and all meters required to measure the amount of each utility used for the purpose of determining charges. Before final acceptance of the work by the PHA, the Contractor shall remove all the temporary connections, distribution lines, meters, and associated paraphernalia.

16. Protection of Existing Vegetation, Structures, Equipment, Utilities, and Improvements

(a) The Contractor shall preserve and protect all structures, equipment, and vegetation (such as trees, shrubs, and grass) on or adjacent to the work site, which are not to be removed under this contract, and which do not unreasonably interfere with the work required under this contract.

(b) The Contractor shall only remove trees when specifically authorized to do so, and shall avoid damaging vegetation that will remain in place. If any limbs or branches of trees are broken during performance of this contract, or by the careless operation of equipment, or by workmen, the Contractor shall trim those limbs or branches with a clean cut and paint the cut with a tree-pruning compound as directed by the Contracting Officer.

(c) The Contractor shall protect from damage all existing improvements and utilities (1) at or near the work site and (2) on adjacent property of a third party, the locations of which are made known to or should be known by the Contractor. Prior to disturbing the ground at the construction site, the Contractor shall ensure that all underground utility lines are clearly marked.

(d) The Contractor shall shore up, brace, underpin, secure, and protect as necessary all foundations and other parts of existing structures adjacent to, adjoining, and in the vicinity of the site, which may be affected by the excavations or other operations connected with the construction of the project.

(e) Any equipment temporarily removed as a result of work under this contract shall be protected, cleaned, and replaced in the same condition as at the time of award of this contract.

(f) New work which connects to existing work shall correspond in all respects with that to which it connects and/or be similar to existing work unless otherwise required by the specifications.

(g) No structural members shall be altered or in any way weakened without the written authorization of the Contracting Officer, unless such work is clearly specified in the plans or specifications.

(h) If the removal of the existing work exposes discolored or unfinished surfaces, or work out of alignment, such surfaces shall be refinished, or the material replaced as necessary to make the continuous work uniform and harmonious. This, however, shall not be construed to require the refinishing or reconstruction of dissimilar finishes previously exposed, or finished surfaces in good condition, but in different planes or on different levels **Construction** when brought together by the removal of intervening work, unless such refinishing or reconstruction is specified in the plans or specifications.

(i) The Contractor shall give all required notices to any adjoining or adjacent property owner or other party before the commencement of any work.

(j) The Contractor shall indemnify and save harmless the PHA from any damages on account of settlement or the loss of lateral support of adjoining property, any damages from changes in topography affecting drainage, and from all loss or expense and all damages for which the PHA may become liable in consequence of such injury or damage to adjoining and adjacent structures and their premises.

(k) The Contractor shall repair any damage to vegetation, structures, equipment, utilities, or improvements, including those that are the property of a third party, resulting from failure to comply with the requirements of this contract or failure to exercise reasonable care in performing the work. If the Contractor fails or refuses to repair the damage promptly, the Contracting Officer may have the necessary work performed and charge the cost to the Contractor.

17. Temporary Buildings and Transportation of Materials

(a) Temporary buildings (e.g., storage sheds, shops, offices, sanitary facilities) and utilities may be erected by the Contractor only with the approval of the Contracting Officer and shall be built with labor and materials furnished by the Contractor without expense to the PHA. The temporary buildings and utilities shall remain the property of the Contractor and shall be removed by the Contractor at its expense upon completion of the work. With the written consent of the Contracting Officer, the buildings and utilities may be abandoned and need not be removed.

(b) The Contractor shall, as directed by the Contracting Officer, use only established roadways, or use temporary roadways constructed by the Contractor when and as authorized by the Contracting Officer. When materials are transported in prosecuting the work, vehicles shall not be loaded beyond the loading capacity recommended by the manufacturer of the vehicle or prescribed by any federal, state, or local law or regulation. When it is necessary to cross curbs or sidewalks, the Contractor shall protect them from damage. The Contractor shall repair or pay for the repair of any damaged curbs, sidewalks, or roads.

18. Clean Air and Water

The contactor shall comply with the Clean Air Act, as amended, 42 USC 7401 et seq., the Federal Water Pollution Control Water Act, as amended, 33 U.S.C. 1251 et seq., and standards issued pursuant thereto in the facilities in which this contract is to be performed.

19. Energy Efficiency

The Contractor shall comply with mandatory standards and policies relating to energy efficiency which are contained in the energy conservation plan issued in compliance with the Energy Policy and Conservation Act (Pub.L. 94-163) for the State in which the work under the contract is performed.

20. Inspection and Acceptance of

(a) Definitions. As used in this clause -

(1) “Acceptance” means the act of an authorized representative of the PHA by which the PHA approves and assumes ownership of the work performed under this contract. Acceptance may be partial or complete.

(2) “Inspection” means examining and testing the work performed under the contract (including, when appropriate, raw materials, equipment, components, and intermediate assemblies) to determine whether it conforms to contract requirements.

(3) “Testing” means that element of inspection that determines the properties or elements, including functional operation of materials, equipment, or their components, by the application of established scientific principles and procedures.

(b) The Contractor shall maintain an adequate inspection system and perform such inspections as will ensure that the work performed under the contract conforms to contract requirements. All work is subject to PHA inspection and test at all places and at all reasonable times before acceptance to ensure strict compliance with the terms of the contract.

(c) PHA inspections and tests are for the sole benefit of the PHA and do not: (1) relieve the Contractor of responsibility for providing adequate quality control measures; (2) relieve the Contractor of responsibility for loss or damage of the material before acceptance; (3) constitute or imply acceptance; or, (4) affect the continuing rights of the PHA after acceptance of the completed work under paragraph (j) below.

(d) The presence or absence of the PHA inspector does not relieve the Contractor from any contract requirement, nor is the inspector authorized to change any term or condition of the specifications without the Contracting Officer’s written authorization. All instructions and approvals with respect to the work shall be given to the Contractor by the Contracting Officer.

(e) The Contractor shall promptly furnish, without additional charge, all facilities, labor, and material reasonably needed for performing such safe and convenient inspections and tests as may be required by the Contracting Officer. The PHA may charge to the Contractor any additional cost of inspection or test when work is not ready at the time specified by the Contractor for inspection or test, or when prior rejection makes reinspection or retest necessary. The PHA shall perform all inspections and tests in a manner that will not unnecessarily delay the work. Special, full size, and performance tests shall be performed as described in the contract.

(f) The PHA may conduct routine inspections of the construction site on a daily basis.

(g) The Contractor shall, without charge, replace or correct work found by the PHA not to conform to contract requirements, unless the PHA decides that it is in its interest to accept the work with an appropriate adjustment in contract price. The Contractor shall promptly segregate and remove rejected material from the premises.

(h) If the Contractor does not promptly replace or correct rejected work, the PHA may (1) by contract or otherwise, replace or correct the work and charge the cost to the Contractor, or (2) terminate for default the Contractor's right to proceed.

(i) If any work requiring inspection is covered up without approval of the PHA, it must, if requested by the Contracting Officer, be uncovered at the expense of the Contractor. If at any time before final acceptance of the entire work, the **Construction** PHA considers it necessary or advisable, to examine work already completed by removing or tearing it out, the Contractor, shall on request, promptly furnish all necessary facilities, labor, and material. If such work is found to be defective or nonconforming in any material respect due to the fault of the Contractor or its subcontractors, the Contractor shall defray all the expenses of the examination and of satisfactory reconstruction. If, however, such work is found to meet the requirements of the contract, the Contracting Officer shall make an equitable adjustment to cover the cost of the examination and reconstruction, including, if completion of the work was thereby delayed, an extension of time.

(j) The Contractor shall notify the Contracting Officer, in writing, as to the date when in its opinion all or a designated portion of the work will be substantially completed and ready for inspection. If the Architect determines that the state of preparedness is as represented, the PHA will promptly arrange for the inspection. Unless otherwise specified in the contract, the PHA shall accept, as soon as practicable after completion and inspection, all work required by the contract or that portion of the work the Contracting Officer determines and designates can be accepted separately. Acceptance shall be final and conclusive except for latent defects, fraud, gross mistakes amounting to fraud, or the PHA's right under any warranty or guarantee.

21. Use and Possession Prior to Completion

(a) The PHA shall have the right to take possession of or use any completed or partially completed part of the work. Before taking possession of or using any work, the Contracting Officer shall furnish the Contractor a list of items of work remaining to be performed or corrected on those portions of the work that the PHA intends to take possession of or use. However, failure of the Contracting Officer to list any item of work shall not relieve the Contractor of responsibility for complying with the terms of the contract. The PHA's possession or use shall not be deemed an acceptance of any work under the contract.

(b) While the PHA has such possession or use, the Contractor shall be relieved of the responsibility for (1) the loss of or damage to the work resulting from the PHA's possession or use, notwithstanding the terms of the clause entitled Permits and Codes herein; (2) all maintenance costs on the areas occupied; and, (3) furnishing heat, light, power, and water used in the areas occupied without proper remuneration therefore. If prior possession or use by the PHA delays the progress of the work or causes additional expense to the Contractor, an equitable adjustment shall be made in the contract price or the time of completion, and the contract shall be modified in writing accordingly.

22. Warranty of Title

The Contractor warrants good title to all materials, supplies, and equipment incorporated in the work and agrees to deliver the premises together with all improvements thereon free from any claims, liens or charges, and agrees further that neither it nor any other person, firm or corporation shall have any right to a lien upon the premises or anything appurtenant thereto.

23. Warranty of

(a) In addition to any other warranties in this contract, the Contractor warrants, except as provided in paragraph (j) of this clause, that work performed under this contract conforms to the contract requirements and is free of any defect in equipment, material, or workmanship performed by the Contractor or any subcontractor or supplier at any tier. This warranty shall continue for a period of _____ (one year unless otherwise indicated) from the date of final acceptance of the work. If the PHA takes possession of any part of the work before final acceptance, this warranty shall continue for a period of (one year unless otherwise indicated) from the date that the PHA takes possession.

(b) The Contractor shall remedy, at the Contractor's expense, any failure to conform, or any defect. In addition, the Contractor shall remedy, at the Contractor's expense, any damage to PHA-owned or controlled real or personal property when the damage is the result of—

(1) The Contractor's failure to conform to contract requirements; or

(2) Any defects of equipment, material, workmanship or design furnished by the Contractor.

(c) The Contractor shall restore any work damaged in fulfilling the terms and conditions of this clause. The Contractor's warranty with respect to work repaired or replaced will run for (one year unless otherwise indicated) from the date of repair or replacement.

(d) The Contracting Officer shall notify the Contractor, in writing, within a reasonable time after the discovery of any failure, defect or damage.

(e) If the Contractor fails to remedy any failure, defect, or damage within a reasonable time after receipt of notice, the PHA shall have the right to replace, repair or otherwise remedy the failure, defect, or damage at the Contractor's expense.

(f) With respect to all warranties, express or implied, from subcontractors, manufacturers, or suppliers for work performed and materials furnished under this contract, the Contractor shall:

(1) Obtain all warranties that would be given in normal commercial practice;

(2) Require all warranties to be executed in writing, for the benefit of the PHA; and,

(3) Enforce all warranties for the benefit of the PHA.

(g) In the event the Contractor's warranty under paragraph (a) of this clause has expired, the PHA may bring suit at its own expense to enforce a subcontractor's, manufacturer's or supplier's warranty.

(h) Unless a defect is caused by the negligence of the Contractor or subcontractor or supplier at any tier, the Contractor shall not be liable for the repair of any defect of material or design furnished by the PHA nor for the repair of any damage that results from any defect in PHA furnished material or design.

(i) Notwithstanding any provisions herein to the contrary, the establishment of the time periods in paragraphs (a) and (c) above relate only to the specific obligation of the Contractor to correct the work, and have no relationship to the time within which its obligation to comply with the contract may be sought to be enforced, nor to the time within which proceedings may be commenced to establish the Contractor's liability with respect to its obligation other than specifically to correct the work.

(j) This warranty shall not limit the PHA's rights under the Inspection and Acceptance of Construction clause of this contract with respect to latent defects, gross mistakes or fraud.

24. Prohibition Against Liens

The Contractor is prohibited from placing a lien on the PHA's property. This prohibition shall apply to all subcontractors at any tier and all materials suppliers.

Administrative Requirements

25. Contract Period

this contract within calendar days of the effective date of the contract, or within the time schedule established in the notice to proceed issued by the Contracting Officer.

26. Order of Provisions

accordance with the terms and conditions of the

In the event of a conflict between these General Conditions and the Specifications, the General Conditions shall prevail. In the event of a conflict between the contract and any applicable state or local law or regulation, the state or local law or regulation shall prevail; provided that such state or local law or regulation does not conflict with, or is less restrictive than applicable federal law, regulation, or Executive Order. In the event of such a conflict, applicable federal law, regulation, and Executive Order shall prevail.

27. Payments

retain ten (10) percent of the amount of progress

(a) The PHA shall pay the Contractor the price as provided in this contract.

(b) The PHA shall make progress payments approximately every 30 days as the work proceeds, on estimates of work accomplished which meets the standards of quality established under the contract, as approved by the Contracting Officer. The PHA may, subject to written determination and approval of the Contracting Officer, make more frequent payments to contractors which are qualified small businesses.

(c) Before the first progress payment under this contract, the Contractor shall furnish, in such detail as requested by the Contracting Officer, a breakdown of the total contract price showing the amount included therein for each principal category of the work, which shall substantiate the payment amount requested in order to provide a basis for determining progress payments. The breakdown shall be approved by the Contracting Officer and must be acceptable to HUD. If the contract covers more than one project, the Contractor shall furnish a separate breakdown for each. The values and quantities employed in making up this breakdown are for determining the amount of progress payments and shall not be construed as a basis for additions to or deductions from the contract price. The Contractor shall prorate its overhead and profit over the construction period of the contract.

(d) The Contractor shall submit, on forms provided by the PHA, periodic estimates showing the value of the work performed during each period based upon the approved

submitted not later than _____ days in advance of the date set for payment and are subject to correction and revision as required. The estimates must be approved by the Contracting Officer with the concurrence of the Architect prior to payment. If the contract covers more than one project, the Contractor shall furnish a separate progress payment estimate for each.

(e) Along with each request for progress payments and the required estimates, the Contractor shall furnish the following certification, or payment shall not be made: I hereby certify, to the best of my knowledge and belief, that:

(1) The amounts requested are only for performance in accordance with the specifications, terms, and conditions of the contract;

(2) Payments to subcontractors and suppliers have been made from previous payments received under the contract, and timely payments will be made from the proceeds of the payment covered by this certification, in accordance with subcontract agreements; and,

(3) This request for progress payments does not include any amounts which the prime contractor intends to withhold or retain from a subcontractor or supplier in

subcontract.

Name:

Title:

Date:

(f) Except as otherwise provided in State law, the PHA shall

payments until completion and acceptance of all work under the contract; except, that if upon completion of 50 percent of the work, the Contracting Officer, after consulting with the Architect, determines that the Contractor's performance and progress are satisfactory, the PHA may make the remaining payments in full for the work subsequently completed. If the Contracting Officer subsequently determines that the Contractor's performance and progress are unsatisfactory, the PHA shall reinstate the ten (10) percent (or other percentage as provided in State law) retainage until such time as the Contracting Officer determines that performance and progress are satisfactory.

(g) The Contracting Officer may authorize material delivered on the site and preparatory work done to be taken into consideration when computing progress payments.

Material delivered to the Contractor at locations other than the site may also be taken into consideration if the Contractor furnishes satisfactory evidence that (1) it has acquired title to such material; (2) the material is properly stored in a bonded warehouse, storage yard, or similar suitable place as may be approved by the Contracting Officer; (3) the material is insured to cover its full value; and (4) the material will be used to perform this contract. Before any progress payment which includes delivered material is made, the Contractor shall furnish such documentation as the Contracting Officer may require to assure the protection of the PHA's interest in such materials. The Contractor shall remain responsible for such stored material notwithstanding the transfer of title to the PHA.

(h) All material and work covered by progress payments made shall, at the time of payment become the sole property of the PHA, but this shall not be construed as (1) relieving the Contractor from the sole responsibility for all material and work upon which payments have been made or the restoration of any damaged work; or, (2) waiving the right of the PHA to require the fulfillment of all of the terms of the contract. In the event the work of the Contractor has been damaged by other contractors or persons other than employees of the PHA in the course of their employment, the Contractor shall restore such damaged work without cost to the PHA and to seek redress for its damage only from those who directly caused it.

(i) The PHA shall make the final payment due the Contractor under this contract after (1) completion and final acceptance of all work; and (2) presentation of release of all claims against the PHA arising by virtue of this contract, other than claims, in stated amounts, that the Contractor has specifically excepted from the operation of the release. Each such exception shall embrace no more than one claim, the basis and scope of which shall be clearly defined. The amounts for such excepted claims shall not be included in the request for final payment. A release may also be required of the assignee if the Contractor's claim to amounts payable under this contract has been assigned.

(j) Prior to making any payment, the Contracting Officer may require the Contractor to furnish receipts or other evidence of payment from all persons performing work and supplying material to the Contractor, if the Contracting Officer determines such evidence is necessary to substantiate claimed costs.

(k) The PHA shall not; (1) determine or adjust any claims for payment or disputes arising there under between the Contractor and its subcontractors or material suppliers; or, (2) withhold any moneys for the protection of the subcontractors or material suppliers. The failure or refusal of the PHA to withhold moneys from the Contractor shall in nowise impair the obligations of any surety or sureties under any bonds furnished under this contract.

28. Contract Modifications

(a) Only the Contracting Officer has authority to modify any term or condition of this contract. Any contract modification shall be authorized in writing.

(b) The Contracting Officer may modify the contract unilaterally (1) pursuant to a specific authorization stated in a contract clause (e.g., Changes); or (2) for administrative matters which do not change the rights or responsibilities of the parties (e.g., change in the PHA address). All other contract modifications shall be in the form of supplemental agreements signed by the Contractor and the Contracting Officer.

(c) When a proposed modification requires the approval of HUD prior to its issuance (e.g., a change order that exceeds the PHA's approved threshold), such modification shall not be effective until the required approval is received by the PHA.

29. Changes

(a) The Contracting Officer may, at any time, without notice to the sureties, by written order designated or indicated to be a change order, make changes in the work within the general scope of the contract including changes:
(1) In the specifications (including drawings and designs);
(2) In the method or manner of performance of the work;
(3) PHA-furnished facilities, equipment, materials, services, or site; or,
(4) Directing the acceleration in the performance of the work.

(b) Any other written order or oral order (which, as used in this paragraph (b), includes direction, instruction, interpretation, or determination) from the Contracting Officer that causes a change shall be treated as a change order under this clause; provided, that the Contractor gives the Contracting Officer written notice stating (1) the date, circumstances and source of the order and (2) that the Contractor regards the order as a change order.

(c) Except as provided in this clause, no order, statement or conduct of the Contracting Officer shall be treated as a change under this clause or entitle the Contractor to an equitable adjustment.

(d) If any change under this clause causes an increase or decrease in the Contractor's cost of, or the time required for the performance of any part of the work under this contract, whether or not changed by any such order, the Contracting Officer shall make an equitable adjustment and modify the contract in writing. However, except for a adjustment based on defective specifications, no proposal for any change under paragraph (b) above shall be allowed for any costs incurred more than 20 days (5 days for oral orders) before the Contractor gives written notice as required. In the case of defective specifications for which the PHA is responsible, the equitable adjustment shall include any increased cost reasonably incurred by the Contractor in attempting to comply with the defective specifications.

(e) The Contractor must assert its right to an adjustment under this clause within 30 days after (1) receipt of a written change order under paragraph (a) of this clause, or (2) the furnishing of a written notice under paragraph (b) of this clause, by submitting a written statement describing the general nature and the amount of the proposal. If the facts justify it, the Contracting Officer may extend the period for submission. The proposal may be included in the notice required under paragraph (b) above. No proposal by the Contractor for an equitable adjustment shall be allowed if asserted after final payment under this contract.

(f) The Contractor's written proposal for equitable adjustment shall be submitted in the form of a lump sum proposal supported with an itemized breakdown of all increases and decreases in the contract in at least the following details:

(1) Direct Costs. Materials (list individual items, the quantity and unit cost of each, and the aggregate cost); Transportation and delivery costs associated with materials; Labor breakdowns by hours or unit costs (identified with specific work to be performed); Construction equipment exclusively necessary for the change; Costs of preparation and/ or revision to shop drawings resulting from the change; Worker's Compensation and Public Liability Insurance; Employment taxes under FICA and FUTA; and, Bond Costs when size of change warrants revision.

(2) Indirect Costs. Indirect costs may include overhead, general and administrative expenses, and fringe benefits not normally treated as direct costs.

(3) Profit. The amount of profit shall be negotiated and may vary according to the nature, extent, and complexity of the work required by the change. The allowability of the direct and indirect costs shall be determined in accordance with the Contract Cost Principles and Procedures for Commercial Firms in Part 31 of the Federal Acquisition Regulation (48 CFR 1-31), as implemented by HUD Handbook 2210.18, in effect on the date of this contract. The Contractor shall not be allowed a profit on the profit received by any subcontractor. Equitable adjustments for deleted work shall include a credit for profit and may include a credit for indirect costs. On proposals covering both increases and decreases in the amount of the contract, the application of indirect costs and profit shall be on the net-change in direct costs for the Contractor or subcontractor performing the work.

(g) The Contractor shall include in the proposal its request for time extension (if any), and shall include sufficient information and dates to demonstrate whether and to what extent the change will delay the completion of the contract in its entirety.

(h) The Contracting Officer shall act on proposals within 30 days after their receipt, or notify the Contractor of the date when such action will be taken.

(i) Failure to reach an agreement on any proposal shall be a dispute under the clause entitled Disputes herein. Nothing in this clause, however, shall excuse the Contractor from proceeding with the contract as changed.

(j) Except in an emergency endangering life or property, no change shall be made by the Contractor without a prior order from the Contracting Officer.

30. Suspension of Work

(a) The Contracting Officer may order the Contractor in writing to suspend, delay, or interrupt all or any part of the work of this contract for the period of time that the Contracting Officer determines appropriate for the convenience of the PHA.

(b) If the performance of all or any part of the work is, for an unreasonable period of time, suspended, delayed, or interrupted (1) by an act of the Contracting Officer in the administration of this contract, or (2) by the Contracting Officer's failure to act within the time specified (or within a reasonable time if not specified) in this contract an adjustment shall be made for any increase in the cost of performance of the contract (excluding profit) necessarily caused by such unreasonable suspension, delay, or interruption and the contract modified in writing accordingly. However, no adjustment shall be made under this clause for any suspension, delay, or interruption to the extent that performance would have been so suspended, delayed, or interrupted by any other cause, including the fault or negligence of the Contractor or for which any equitable adjustment is provided for or excluded under any other provision of this contract.

(c) A claim under this clause shall not be allowed (1) for any costs incurred more than 20 days before the Contractor shall have notified the Contracting Officer in writing of the act or failure to act involved (but this requirement shall not apply as to a claim resulting from a suspension order); and, (2) unless the claim, in an amount stated, is asserted in writing as soon as practicable after the termination of the suspension, delay, or interruption, but not later than the date of final payment under the contract.

31. Disputes

(a) "Claim," as used in this clause, means a written demand or written assertion by one of the contracting parties seeking, as a matter of right, the payment of money in a sum certain, the adjustment or interpretation of contract terms, or other relief arising under or relating to the contract. A claim arising under the contract, unlike a claim relating to the contract, is a claim that can be resolved under a contract clause that provides for the relief sought by the claimant. A voucher, invoice, or other routine request for payment that is not in dispute when submitted is not a claim. The submission may be converted to a claim by complying with the requirements of this clause, if it is disputed either as to liability or amount or is not acted upon in a reasonable time.

(b) Except for disputes arising under the clauses entitled Labor Standards - Davis Bacon and Related Acts, herein, all disputes arising under or relating to this contract, including any claims for damages for the alleged breach thereof which are not disposed of by agreement, shall be resolved under this clause.

(c) All claims by the Contractor shall be made in writing and submitted to the Contracting Officer for a written decision. A claim by the PHA against the Contractor shall be subject to a written decision by the Contracting Officer.

(d) The Contracting Officer shall, within 60 (unless otherwise indicated) days after receipt of the request, decide the claim or notify the Contractor of the date by which the decision will be made.

(e) The Contracting Officer's decision shall be final unless the Contractor (1) appeals in writing to a higher level in the PHA in accordance with the PHA's policy and procedures, (2) refers the appeal to an independent mediator or arbitrator, or (3) files suit in a court of competent jurisdiction. Such appeal must be made within (30 unless otherwise indicated) days after receipt of the Contracting Officer's decision.

(f) The Contractor shall proceed diligently with performance of this contract, pending final resolution of any request for relief, claim, appeal, or action arising under or relating to the contract, and comply with any decision of the Contracting Officer.

32. Default

(a) If the Contractor refuses or fails to prosecute the work, or any separable part thereof, with the diligence that will insure its completion within the time specified in this contract, or any extension thereof, or fails to complete said work within this time, the Contracting Officer may, by written notice to the Contractor, terminate the right to

proceed with the work (or separable part of the work) that has been delayed. In this event, the PHA may take over the work and complete it, by contract or otherwise, and may take possession of and use any materials, equipment, and plant on the work site necessary for completing the work. The Contractor and its sureties shall be liable for any damage to the PHA resulting from the Contractor's refusal or failure to complete the work within the specified time, whether or not the Contractor's right to proceed with the work is terminated. This liability includes any increased costs incurred by the PHA in completing the work.

(b) The Contractor's right to proceed shall not be terminated or the Contractor charged with damages under this clause if—

(1) The delay in completing the work arises from unforeseeable causes beyond the control and without the fault or negligence of the Contractor. Examples of such causes include (i) acts of God, or of the public enemy, (ii) acts of the PHA or other governmental entity in either its sovereign or contractual capacity, (iii) acts of another contractor in the performance of a contract with the PHA, (iv) fires, (v) floods, (vi) epidemics, (vii) quarantine restrictions, (viii) strikes, (ix) freight embargoes, (x) unusually severe weather, or (xi) delays of subcontractors or suppliers at any tier arising from unforeseeable causes beyond the control and without the fault or negligence of both the Contractor and the subcontractors or suppliers; and

(2) The Contractor, within days (10 days unless otherwise indicated) from the beginning of such delay (unless extended by the Contracting Officer) notifies the Contracting Officer in writing of the causes of delay. The Contracting Officer shall ascertain the facts and the extent of the delay. If, in the judgment of the Contracting Officer, the findings of fact warrant such action, time for completing the work shall be extended by written modification to the contract. The findings of the Contracting Officer shall be reduced to a written decision which shall be subject to the provisions of the Disputes clause of this contract.

(c) If, after termination of the Contractor's right to proceed, it is determined that the Contractor was not in default, or that the delay was excusable, the rights and obligations of the parties will be the same as if the termination had been for convenience of the PHA.

33. Liquidated Damages

(a) If the Contractor fails to complete the work within the time specified in the contract, or any extension, as specified in the clause entitled Default of this contract, the Contractor shall pay to the PHA as liquidated damages, the sum of $ _____ Contracting Officer insert amount] for each day of delay. If different completion dates are specified in the contract for separate parts or stages of the work, the amount of liquidated damages shall be assessed on those parts or stages which are delayed. To the extent that the Contractor's delay or nonperformance is excused under another clause in this contract, liquidated damages shall not be due the PHA. The Contractor remains liable for damages caused other than by delay.

(b) If the PHA terminates the Contractor's right to proceed, the resulting damage will consist of liquidated damages until such reasonable time as may be required for final completion of the work together with any increased costs occasioned the PHA in completing the work.

(c) If the PHA does not terminate the Contractor's right to proceed, the resulting damage will consist of liquidated damages until the work is completed or accepted.

34. Termination for Convenience

(a) The Contracting Officer may terminate this contract in whole, or in part, whenever the Contracting Officer determines that such termination is in the best interest of the PHA. Any such termination shall be effected by delivery to the Contractor of a Notice of Termination specifying the extent to which the performance of the work under the contract is terminated, and the date upon which such termination becomes effective.

(b) If the performance of the work is terminated, either in whole or in part, the PHA shall be liable to the Contractor for reasonable and proper costs resulting from such termination upon the receipt by the PHA of a properly presented claim setting out in detail: (1) the total cost of the work performed to date of termination less the total amount of contract payments made to the Contractor; (2) the cost (including reasonable profit) of settling and paying claims under subcontracts and material orders for work performed and materials and supplies delivered to the site, payment for which has not been made by the PHA to the Contractor or by the Contractor to the subcontractor or supplier; (3) the cost of preserving and protecting the work already performed until the PHA or assignee takes possession thereof or assumes responsibility therefore; (4) the actual or estimated cost of legal and accounting services reasonably necessary to prepare and present the termination claim to the PHA; and (5) an amount constituting a reasonable profit on the value of the work performed by the Contractor.

(c) The Contracting Officer will act on the Contractor's claim within days (60 days unless otherwise indicated) of receipt of the Contractor's claim.

(d) Any disputes with regard to this clause are expressly made subject to the provisions of the Disputes clause of this contract.

35. Assignment of Contract

The Contractor shall not assign or transfer any interest in this contract; except that claims for monies due or to become due from the PHA under the contract may be assigned to a bank, trust company, or other financial institution. Such assignments of claims shall only be made with the written concurrence of the Contracting Officer. If the Contractor is a partnership, this contract shall inure to the benefit of the surviving or remaining member(s) of such partnership as approved by the Contracting Officer.

36. Insurance

(a) Before commencing work, the Contractor and each subcontractor shall furnish the PHA with certificates of insurance showing the following insurance is in force and will insure all operations under the Contract:

(1) Workers' Compensation, in accordance with state or Territorial Workers' Compensation laws.

(2) Commercial General Liability with a combined single limit for bodily injury and property damage of not less than $ _____ [Contracting Officer insert amount]

per occurrence to protect the Contractor and each subcontractor against claims for bodily injury or death and damage to the property of others. This shall cover the use of all equipment, hoists, and vehicles on the site(s) not covered by Automobile Liability under (3) below. If the Contractor has a "claims made" policy, then the following additional requirements apply: the policy must provide a "retroactive date" which must be on or before the execution date of the Contract; and the extended reporting period may not be less than five years following the completion date of the Contract.

(3) Automobile Liability on owned and non -owned motor vehicles used on the site(s) or in connection therewith for a combined single limit for bodily injury and property damage of not less than $ _____ [Contracting Officer insert amount] per occurrence.

(b) Before commencing work, the Contractor shall furnish the PHA with a certificate of insurance evidencing that Builder's Risk (fire and extended coverage) Insurance on all work in place and/or materials stored at the building site(s), including foundations and building equipment, is in force. The Builder's Risk Insurance shall be for the benefit of the Contractor and the PHA as their interests may appear and each shall be named in the policy or policies as an insured. The Contractor in installing equipment supplied by the PHA shall carry insurance on such equipment from the time the Contractor takes possession thereof until the Contract work is accepted by the PHA. The Builder's Risk Insurance need not be carried on excavations, piers, footings, or foundations until such time as work on the superstructure is started. It need not be carried on landscape work. Policies shall furnish coverage at all times for the full cash value of all completed construction, as well as materials in place and/or stored at the site(s), whether or not partial payment has been made by the PHA. The Contractor may terminate this insurance on buildings as of the date taken over for occupancy by the PHA. The Contractor is not required to carry Builder's Risk Insurance for modernization work which does not involve structural alterations or additions and where the PHA's existing fire and extended coverage policy can be endorsed to include such work.

(c) All insurance shall be carried with companies which are financially responsible and admitted to do business in the State in which the project is located. If any such insurance is due to expire during the construction period, the Contractor (including subcontractors, as applicable) shall not permit the coverage to lapse and shall furnish evidence of coverage to the Contracting Officer. All certificates of insurance, as evidence of coverage, shall provide that no coverage may be canceled or non-renewed by the insurance company until at least 30 days prior written notice has been given to the Contracting Officer.

37. Subcontracts

(a) Definitions. As used in this contract -

(1) "Subcontract" means any contract, purchase order, or other purchase agreement, including modifications and change orders to the foregoing, entered into by a subcontractor to furnish supplies, materials, equipment, and services for the performance of the prime contract or a subcontract.

(2) "Subcontractor" means any supplier, vendor, or firm that furnishes supplies, materials, equipment, or services to or for the Contractor or another subcontractor.

(b) The Contractor shall not enter into any subcontract with any subcontractor who has been temporarily denied participation in a HUD program or who has been suspended or debarred from participating in contracting programs by any agency of the United States Government or of the state in which the work under this contract is to be performed.

(c) The Contractor shall be as fully responsible for the acts or omissions of its subcontractors, and of persons either directly or indirectly employed by them as for the acts or omissions of persons directly employed by the Contractor.

(d) The Contractor shall insert appropriate clauses in all subcontracts to bind subcontractors to the terms and conditions of this contract insofar as they are applicable to the work of subcontractors.

(e) Nothing contained in this contract shall create any contractual relationship between any subcontractor and the PHA or between the subcontractor and HUD.

38. Subcontracting with Small and Minority Firms, Women's Business Enterprise, and Labor Surplus Area Firms

The Contractor shall take the following steps to ensure that, whenever possible, subcontracts are awarded to small business firms, minority firms, women's business enterprises, and labor surplus area firms:

(a) Placing qualified small and minority businesses and women's business enterprises on solicitation lists;

(b) Ensuring that small and minority businesses and women's business enterprises are solicited whenever they are potential sources;

(c) Dividing total requirements, when economically feasible, into smaller tasks or quantities to permit maximum participation by small and minority businesses and women's business enterprises;

(d) Establishing delivery schedules, where the requirements of the contract permit, which encourage participation by small and minority businesses and women's business enterprises; and

(e) Using the services and assistance of the U.S. Small Business Administration, the Minority Business Development Agency of the U.S. Department of Commerce, and State and local governmental small business agencies.

39. Equal Employment Opportunity

During the performance of this contract, the Contractor/Seller agrees as follows:

(a) The Contractor/Seller shall not discriminate against any employee or applicant for employment because of of race color, religion, sex, sexual orientation, gender identity, disability, or national origin.

(b) The Contractor/Seller shall take affirmative action to ensure that applicants are employed, and that employees are treated during employment without regard to their race, color, religion, sex, sexual orientation, gender identity, disability, or national origin. Such action shall include, but not be limited to, (1) employment, (2) upgrading demotion, (4) transfer, (5) recruitment or recruitment advertising, (6) layoff or termination, (7) rates of pay or other forms of compensation, and (8) selection for training,including apprenticeship

(c) The Contractor/Seller agrees to post in conspicuous places available to employees and applicants for employment the notices to be provided by the Contracting Officer setting forth the provisions of this nondiscrimination clause.
(d) The Contractor/Seller shall, in all solicitations or advertisements for employees placed by or on behalf of the Contractor/Seller, state that all qualified applicants will receive consideration for employment without regard to race, color, religion, sex, or national origin.
(e) The Contractor/Seller shall send, to each labor union or representative of workers with which it has a collective bargaining agreement or other contract or understanding, the notice to be provided by the Contracting Officer advising the labor union or workers' representative of the Contractor's commitments under this clause, and post copies of the notice in conspicuous places available to employees and applicants for employment.
(f) The Contractor/Seller shall comply with Executive Order 11246, as amended, and the rules, regulations, and orders of the Secretary of Labor.
(g) The Contractor/Seller shall furnish all information and reports required by Executive Order 11246, as amended, Section 503 of the Rehabilitation Act of 1973, as amended, and by rules, regulations, and orders of the Secretary of Labor, or pursuant thereto. The Contractor/Seller shall permit

access to its books, records, and accounts by the Secretary of Labor for purposes of investigation to ascertain compliance with such rules, regulations, and orders.

(h) In the event of a that the Contractor/Seller is in noncompliance with the nondiscrimination clauses of this contract or with any of such rules, regulations, or orders, this contract may be canceled, terminated or suspended in whole or in part and the contractor/seller may be declared ineligible for further Government contracts in accordance with procedures authorized in Executive Order 11246 of September 24, 1965, and such other sanctions may be imposed and remedies invoked as provided in Executive Order 11246 of September 24, 1965, or by rule, regulation, or order of the Secretary of Labor, or as otherwise provided by law.

(i)The contractor/seller will include the provisions of paragraphs (a) through (h) in every subcontract or purchase order unless exempted by rules, regulations, or orders of the Secretary of Labor issued pursuant to section 204 of Executive Order 11246 of September 24, 1965, so that such provisions will be binding upon each sub[contractor/seller] or vendor. The [contractor/seller] will take such action with respect to any subcontract or purchase order as may be directed by the Secretary of Labor as a means of enforcing such provisions in cluding sanctions for noncompliance: Provided, however, that in the event the [contractor/seller] becomes involved in, or is threatened with, litigation with a subcontractor or vendor as a result of such direction, the [contractor/seller] may request the United States to enter into such litigation to protect the interests of the United States.

(j) Compliance with the requirements of this clause shall be to the maximum extent consistent with, but not in derogation of, compliance with section 7(b) of the Indian Self-Determination and Education Assistance Act and the Indian Preference clause of this contract.

40. Employment, Training, and Contracting Opportunities for Low-Income Persons, Section 3 of the Housing and Urban Development Act of 1968.

(a) The work to be performed under this contract is subject to the requirements of Section 3 of the Housing and Urban Development Act of 1968, as amended, 12 U.S.C. 1701u (section 3). The purpose of section 3 is to ensure that employment and other economic opportunities generated by HUD assistance or HUD-assisted projects covered by Section 3, shall, to the greatest extent feasible, be directed to low- and very low-income persons, particularly persons who are recipients of HUD assistance for housing.
(b) The parties to this contract agree to comply with HUD's regulations in 24 CFR Part 75, which implement Section 3. As evidenced by their execution of this contract, the parties to this contract certify that they are under no contractual or other impediment that would prevent them from complying with the Part 75 regulations.
(c) The contractor agrees to send to each labor organization or representative of workers with which the contractor has a collective bargaining agreement or other understanding, if any, a notice advising the labor organization or workers' representative of the contractor's commitments under this section 3 clause and will post copies of the notice in conspicuous places at the work site where both employees and applicants for training and employment positions can see the notice. The notice shall describe the Section 3 prioritization requirements and shall state the minimum percentages of labor hour requirements established in the Benchmark Notice (FR-6085-N-04).
(d) The contractor agrees to include this section 3 clause in every subcontract subject to compliance with regulations in 24 CFR Part 75, and agrees to take appropriate action, as provided in an applicable provision of the subcontract or in this section 3 clause, upon a finding that the subcontractor is in violation of the regulations in 24 CFR Part 75. The contractor will not subcontract with any subcontractor where the contractor has notice or knowledge that the subcontractor has been found in violation of the regulations in 24 CFR Part 75.
(e) Noncompliance with HUD's regulations in 24 CFR Part 75 may result in sanctions, termination of this contract for default, and debarment or suspension from future HUD assisted contracts.
(f) Contracts, subcontracts, grants, or subgrants subject to Section 7(b) of the Indian Self-Determination and Education Assistance Act (25 U.S.C. 5307(b)) or subject to tribal preference requirements as authorized under 101(k) of the Native American Housing Assistance and Self-Determination Act (25 U.S.C. 4111(k)) must provide preferences in employment, training, and business opportunities to Indians and Indian organizations, and are therefore not subject to the requirements of 24 CFR Part 75.

41. Interest of Members of Congress

No member of or delegate to the Congress of the United States of America shall be admitted to any share or part of this contract or to any benefit that may arise therefrom.

42. Interest of Members, Officers, or Employees and Former Members, Officers, or Employees

No member, officer, or employee of the PHA, no member of the governing body of the locality in which the project is situated, no member of the governing body of the locality in which the PHA was activated, and no other public official of such locality or localities who exercises any functions or responsibilities with respect to the project, shall, during his or her tenure, or for one year thereafter, have any interest, direct or indirect, in this contract or the proceeds thereof.

43. Limitations on Payments made to Influence Certain Federal Financial Transactions

(a) The Contractor agrees to comply with Section 1352 of Title 31, United States Code which prohibits the use of Acts Federal appropriated funds to pay any person for influencing or attempting to influence an officer or employee of any agency, a Member of Congress, and officer or employee of Congress, or an employee of a Member of Congress in connection with any of the following covered Federal actions: the awarding of any Federal contract; the making of any Federal grant; the making of any Federal loan; the entering into of any cooperative agreement; or the modification of any Federal contract, grant, loan, or cooperative agreement.

(b) The Contractor further agrees to comply with the requirement of the Act to furnish a disclosure (OMB Standard Form LLL, Disclosure of Lobbying Activities) if any funds other than Federal appropriated funds (including profit or fee received under a covered Federal transaction) have been paid, or will be paid, to any person for influencing or attempting to influence an officer or employee of any agency, a Member of Congress, an officer or employee of Congress, or an employee of a Member of Congress in connection with a Federal contract, grant, loan, or cooperative agreement.

44. Royalties and Patents

The Contractor shall pay all royalties and license fees. It shall defend all suits or claims for infringement of any patent rights and shall save the PHA harmless from loss on account thereof; except that the PHA shall be responsible for all such loss when a particular design, process or the product of a particular manufacturer or manufacturers is specified and the Contractor has no reason to believe that the specified design, process, or product is an infringement. If, however, the Contractor has reason to believe that any design, process or product specified is an infringement of a patent, the Contractor shall promptly notify the Contracting Officer. Failure to give such notice shall make the Contractor responsible for resultant loss.

45. Examination and Retention of Contractor's Records

(a) The PHA, HUD, or Comptroller General of the United States, or any of their duly authorized representatives shall, until 3 years after final payment under this contract, have access to and the right to examine any of the Contractor's directly pertinent books, documents, papers, or other records involving transactions related to this contract for the purpose of making audit, examination, excerpts, and transcriptions.

(b) The Contractor agrees to include in first-tier subcontracts under this contract a clause substantially the same as paragraph (a) above. "Subcontract," as used in this clause, excludes purchase orders not exceeding $10,000.

(c) The periods of access and examination in paragraphs (a) and (b) above for records relating to (1) appeals under the Disputes clause of this contract, (2) litigation or settlement of claims arising from the performance of this contract, or (3) costs and expenses of this contract to which the PHA, HUD, or Comptroller General or any of their duly authorized representatives has taken exception shall continue until disposition of such appeals, litigation, claims, or exceptions.

46. Labor Standards - Davis-Bacon and Related

If the total amount of this contract exceeds $2,000, the Federal labor standards set forth in the clause below shall apply to the development or construction work to be performed under the contract.

(a) Minimum Wages.

(1) All laborers and mechanics employed under this contract in the development or construction of the project(s) involved will be paid unconditionally and not less often than once a week, and without subsequent deduction or rebate on any account (except such payroll deductions as are permitted by regulations issued by the Secretary of Labor under the Copeland Act (29 CFR Part 3)), the full amount of wages and bona fide fringe benefits (or cash equivalents thereof) due at time of payment computed at rates not less than those contained in the wage determination of the Secretary of Labor which is attached hereto and made a part hereof, regardless of any contractual relationship which may be alleged to exist between the Contractor and such laborers and mechanics. Contributions made or costs reasonably anticipated for bona fide fringe benefits under Section 1(b)(2) of the Davis-Bacon Act on behalf of laborers or mechanics are considered wages paid to such laborers or mechanics, subject to the provisions of 29 CFR 5.5(a)(1)(iv); also, regular contributions made or costs incurred for more than a weekly period (but not less often than quarterly) under plans, funds, or programs which cover the regular weekly period, are deemed to be constructively made or incurred during such weekly period. Such laborers and mechanics shall be paid the appropriate wage rate and fringe benefits in the wage determination for the classification of work actually performed, without regard to skill, except as provided in 29 CFR 5.5(a)(4). Laborers or mechanics performing work in more than one classification may be compensated at the rate specified for each classification for the time actually worked therein; provided, that the employer's payroll records accurately set forth the time spent in each classification in which work is performed. The wage determination (including any additional classification and wage rates conformed under 29 CFR 5.5(a)(1)(ii) and the Davis-Bacon poster (WH-1321) shall

be posted at all times by the Contractor and its subcontractors at the site of the work in a prominent and accessible place where it can be easily seen by the workers.

(2) (i) Any class of laborers or mechanics, including helpers, which is not listed in the wage determination and which is to be employed under the contract shall be classified in conformance with the wage determination. HUD shall approve an additional classification and wage rate and fringe benefits therefor only when all the following criteria have been met: (A) The work to be performed by the classification requested is not performed by a classification in the wage determination; and (B) The classification is utilized in the area by the construction industry; and (C) The proposed wage rate, including any bona fide fringe benefits, bears a reasonable relationship to the wage rates contained in the wage determination.

(ii) If the Contractor and the laborers and mechanics to be employed in the classification (if known), or their representatives, and HUD or its designee agree on the classification and wage rate (including the amount designated for fringe benefits where appropriate), a report of the action taken shall be sent by HUD or its designee to the Administrator of the Wage and Hour Division, Employee Standards Administration, U.S. Department of Labor, Washington, DC 20210. The Administrator, or an authorized representative, will approve, modify, or disapprove every additional classification action within 30 days of receipt and so advise HUD or its designee or will notify HUD or its designee within the 30-day period that additional time is necessary.

(iii) In the event the Contractor, the laborers or mechanics to be employed in the classification or their representatives, and HUD or its designee do not agree on the proposed classification and wage rate (including the amount designated for fringe benefits, where appropriate), HUD or its designee shall refer the questions, including the views of all interested parties and the recommendation of HUD or its designee, to the Administrator of the Wage and Hour Division for determination. The Administrator, or an authorized representative, will issue a determination within 30 days of receipt and so advise HUD or its designee or will notify HUD or its designee within the 30-day period that additional time is necessary.

(iv) The wage rate (including fringe benefits where appropriate) determined pursuant to subparagraphs (a)(2)(ii) or (iii) of this clause shall be paid to all workers performing work in the classification under this contract from the first day on which work is performed in classification.

(3) Whenever the minimum wage rate prescribed in the contract for a class of laborers or mechanics includes a fringe benefit which is not expressed as an hourly rate, the Contractor shall either pay the benefit as stated in the wage determination or shall pay another bona fide fringe benefit or an hourly cash equivalent thereof.

(4) If the Contractor does not make payments to a trustee or other third person, the Contractor may consider as part of the wages of any laborer or mechanic the amount of any costs reasonably anticipated in providing bona fide fringe benefits under a plan or program; provided, that the Secretary of Labor has found, upon the written request of the Contractor, that the applicable standards of the Davis-Bacon Act have been met. The Secretary of Labor may require the Contractor to set aside in a separate account assets for the meeting of obligations under the plan or program.

(b) Withholding of funds. HUD or its designee shall, upon its own action or upon written request of an authorized representative of the Department of Labor, withhold or cause to be withheld from the Contractor under this contract or any other Federal contract with the same prime Contractor, or any other Federally-assisted contract subject to Davis-Bacon prevailing wage requirements, which is held by the same prime Contractor, so much of the accrued payments or advances as may be considered necessary to pay laborers and mechanics, including apprentices, trainees, and helpers, employed by the Contractor or any subcontractor the full amount of wages required by the contract. In the event of failure to pay any laborer or mechanic, including any apprentice, trainee, or helper, employed or working in the construction or development of the project, all or part of the wages required by the contract, HUD or its designee may, after written notice to the Contractor, take such action as may be necessary to cause the suspension of any further payment, advance, or guarantee of funds until such violations have ceased. HUD or its designee may, after written notice to the Contractor, disburse such amounts withheld for and on account of the Contractor or subcontractor to the respective employees to whom they are due.

(c) Payrolls and basic records.

(1) Payrolls and basic records relating thereto shall be maintained by the Contractor during the course of the work and preserved for a period of three years thereafter for all laborers and mechanics working in the construction or development of the project. Such records shall contain the name, address, and social security number of each such worker, his or her correct classification, hourly rates of wages paid (including rates of contributions or costs anticipated for bona fide fringe benefits or cash equivalents thereof of the types described in section 1(b)(2)(B) of the Davis-Bacon Act), daily and weekly number of hours worked, deductions made, and actual wages paid. Whenever the Secretary of Labor has found, under 29 CFR 5.5(a)(1)(iv), that the wages of any laborer or mechanic include the amount of costs reasonably anticipated in providing benefits under a plan or program described in section 1(b)(2)(B) of the Davis-Bacon Act, the Contractor shall maintain records which show that the commitment to provide such benefits is enforceable, that the plan or program is financially responsible, and that the plan or program has been communicated in writing to the laborers or mechanics affected, and records which show the costs anticipated or the actual cost incurred in providing such benefits. Contractors employing apprentices or trainees under approved programs shall maintain written evidence of the registration of apprenticeship programs and certification of trainee programs, the registration of the apprentices and trainees, and the ratios and wage rates prescribed in the applicable programs.

(2) (i) The Contractor shall submit weekly for each week in which any contract work is performed a copy of all payrolls to the Contracting Officer for transmission to HUD or its designee. The payrolls submitted shall set out accurately and completely all of the information required to be maintained under subparagraph (c)(1) of this clause. This information may be submitted in any form desired. Optional Form WH-347 (Federal Stock Number 029-005-00014-1) is available for this purpose and may be purchased from the Superintendent of Documents, U.S. Government Printing Office, Washington, D.C. 20402. The Contractor is responsible for the submission of copies of payrolls by all subcontractors. (Approved by the Office of Management and Budget under OMB Control Number 1214-0149.)

(ii) Each payroll submitted shall be accompanied by a "Statement of Compliance," signed by the Contractor or subcontractor or his or her agent who pays or supervises the payment of the persons employed under the contract and shall certify the following:

(A) That the payroll for the payroll period contains the information required to be maintained under paragraph (c) (1) of this clause and that such information is correct and complete;

(B) That each laborer or mechanic (including each helper, apprentice, and trainee) employed on the contract during the payroll period has been paid the full weekly wages earned, without rebate, either directly or indirectly, and that no deductions have been made either directly or indirectly from the full wages earned, other than permissible deductions as set forth in 29 CFR Part 3; and

(C) That each laborer or mechanic has been paid not less than the applicable wage rates and fringe benefits or cash equivalents for the classification of work performed, as specified in the applicable wage determination incorporated into the contract.

(iii) The weekly submission of a properly executed certification set forth on the reverse side of Optional Form WH-347 shall satisfy the requirements for submission of the "Statement of Compliance" required by subparagraph (c)(2)(ii) of this clause.

(iv) The falsification of any of the above certifications may subject the Contractor or subcontractor to civil or criminal prosecution under Section 1001 of Title 18 and Section 3729 of Title 31 of the United States Code.

(3) The Contractor or subcontractor shall make the records required under subparagraph (c)(1) available for inspection, copying, or transcription by authorized representatives of HUD or its designee, the Contracting Officer, or the Department of Labor and shall permit such representatives to interview employees during working hours on the job. If the Contractor or subcontractor fails to submit the required records or to make them available, HUD or its designee may, after written notice to the Contractor, take such action as may be necessary to cause the suspension of any further payment, advance, or guarantee of funds. Furthermore, failure to submit the required records upon request or to make such records available may be grounds for debarment action pursuant to 29 CFR 5.12.

(d) (1) Apprentices. Apprentices will be permitted to work at less than the predetermined rate for the work they performed when they are employed pursuant to and individually registered in a bona fide apprenticeship program registered with the U.S. Department of Labor, Employment and Training Administration, Office of Apprenticeship and Training, Employer and Labor Services (OATELS), or with a State Apprenticeship Agency recognized by OATELS, or if a person is employed in his or her first 90 days of probationary employment as an apprentice in such an apprenticeship program, who is not individually registered in the program, but who has been certified by OATELS or a State Apprenticeship Agency (where appropriate) to be eligible for probationary employment as an apprentice. The allowable ratio of apprentices to journeymen on the job site in any craft classification shall not be greater than the ratio permitted to the Contractor as to the entire work force under the registered program. Any worker listed on a payroll at an apprentice wage rate, who is not registered or otherwise employed as stated in this paragraph, shall be paid not less than the applicable wage rate on the wage determination for the classification of work actually performed. In addition, any apprentice performing work on the job site in excess of the ratio permitted under the registered program shall be paid not less than the applicable wage rate on the wage determination for the work actually performed. Where a contractor is performing construction on a project in a locality other than that in which its program is registered, the ratios and wage rates (expressed in percentages of the journeyman's hourly rate) specified in the Contractor's or subcontractor's registered program shall be observed. Every apprentice must be paid at not less than the rate specified in the registered program for the apprentice's level of progress, expressed as a percentage of the journeyman hourly rate specified in the applicable wage determination. Apprentices shall be paid fringe benefits in accordance with the provisions of the apprenticeship program. If the apprenticeship program does not specify fringe benefits, apprentices must be paid the full amount of fringe benefits listed on the wage determination for the applicable classification. If the Administrator of the Wage and Hour Division determines that a different practice prevails for the applicable apprentice classification, fringes shall be paid in accordance with that determination. In the event OATELS, or a State Apprenticeship Agency recognized by OATELS, withdraws approval of an apprenticeship program, the Contractor will no longer be permitted to utilize apprentices at less than the applicable predetermined rate for the work performed until an acceptable program is approved.

(2) Trainees. Except as provided in 29 CFR 5.16, trainees will not be permitted to work at less than the predetermined rate for the work performed unless they are employed pursuant to and individually registered in a program which has received prior approval, evidenced by formal certification by the U.S. Department of Labor, Employment and Training Administration. The ratio of trainees to journeymen on the job site shall not be greater than permitted under

the plan approved by the Employment and Training Administration. Every trainee must be paid at not less than the rate specified in the approved program for the trainee's level of progress, expressed as a percentage of the journeyman hourly rate specified in the applicable wage determination. Trainees shall be paid fringe benefits in accordance with the provisions of the trainee program. If the trainee program does not mention fringe benefits, trainees shall be paid the full amount of fringe benefits listed in the wage determination unless the Administrator of the Wage and Hour Division determines that there is an apprenticeship program associated with the corresponding journeyman wage rate in the wage determination which provides for less than full fringe benefits for apprentices. Any employee listed on the payroll at a trainee rate who is not registered and participating in a training plan approved by the Employment and Training Administration shall be paid not less than the applicable wage rate in the wage determination for the classification of work actually performed. In addition, any trainee performing work on the job site in excess of the ratio permitted under the registered program shall be paid not less than the applicable wage rate in the wage determination for the work actually performed. In the event the Employment and Training Administration withdraws approval of a training program, the Contractor will no longer be permitted to utilize trainees at less than the applicable predetermined rate for the work performed until an acceptable program is approved.

(3) Equal employment opportunity. The utilization of apprentices, trainees, and journeymen under this clause shall be in conformity with the equal employment opportunity requirements of Executive Order 11246, as amended, and 29 CFR Part 30.

(e) Compliance with Copeland Act requirements. The Contractor shall comply with the requirements of 29 CFR Part 3, which are hereby incorporated by reference in this contract.

(f) Contract termination; debarment. A breach of this contract clause may be grounds for termination of the contract and for debarment as a Contractor and a subcontractor as provided in 29 CFR 5.12.

(g) Compliance with Davis-Bacon and related Act requirements. All rulings and interpretations of the Davis-Bacon and related Acts contained in 29 CFR Parts 1, 3, and 5 are herein incorporated by reference in this contract.

(h) Disputes concerning labor standards. Disputes arising out of the labor standards provisions of this clause shall not be subject to the general disputes clause of this contract. Such disputes shall be resolved in accordance with the procedures of the Department of Labor set forth in 29 CFR Parts 5, 6, and 7. Disputes within the meaning of this clause include disputes between the Contractor (or any of its subcontractors) and the PHA, HUD, the U.S. Department of Labor, or the employees or their representatives.

(i) Certification of eligibility.

(1) By entering into this contract, the Contractor certifies that neither it (nor he or she) nor any person or firm who has an interest in the Contractor's firm is a person or firm ineligible to be awarded contracts by the United States Government by virtue of section 3(a) of the Davis-Bacon Act or 29 CFR 5.12(a)(1).

(2) No part of this contract shall be subcontracted to any person or firm ineligible for award of a United States Government contract by virtue of section 3(a) of the Davis-Bacon Act or 29 CFR 5.12(a)(1).

(3) The penalty for making false statements is prescribed in the U. S. Criminal Code, 18 U.S.C. 1001.

(j) Contract Work Hours and Safety Standards Act. As used in this paragraph, the terms "laborers" and "mechanics" include watchmen and guards.

(1) Overtime requirements. No contractor or subcontractor contracting for any part of the contract work which may require or involve the employment of laborers or mechanics, including watchmen and guards, shall require or permit any such laborer or mechanic in any workweek in which the individual is employed on such work to work in excess of 40 hours in such workweek unless such laborer or mechanic receives compensation at a rate not less than one and one-half times the basic rate of pay for all hours worked in excess of 40 hours in such workweek.

(2) Violation; liability for unpaid wages; liquidated damages. In the event of any violation of the provisions set forth in subparagraph (j)(1) of this clause, the Contractor and any subcontractor responsible therefor shall be liable for the unpaid wages. In addition, such Contractor and subcontractor shall be liable to the United States (in the case of work done under contract for the District of Columbia or a territory, to such District or to such territory), for liquidated damages. Such liquidated damages shall be computed with respect to each individual laborer or mechanic (including watchmen and guards) employed in violation of the provisions set forth in subparagraph (j)(1) of this clause, in the sum of $27 for each calendar day on which such individual was required or permitted to work in excess of the standard workweek of 40 hours without payment of the overtime wages required by provisions set forth in subparagraph (j)(1) of this clause. DOL posts current fines at: https://www.dol.gov/whd/govcontracts/cwhssa.htm#cmp

(3) Withholding for unpaid wages and liquidated damages. HUD or its designee shall upon its own action or upon written request of an authorized representative of the Department of Labor withhold or cause to be withheld, from any moneys payable on account of work performed by the Contractor or subcontractor under any such contract or any Federal contract with the same prime Contractor, or any other Federally-assisted contract subject to the Contract Work Hours and Safety Standards Act, which is held by the same prime Contractor, such sums as may be determined to be necessary to satisfy any liabilities of such Contractor or subcontractor for unpaid wages and liquidated damages as provided in the provisions set forth in subparagraph (j)(2) of this clause.

(k) Subcontracts. The Contractor or subcontractor shall insert in any subcontracts all the provisions contained in this clause, and such other clauses as HUD or its designee may by appropriate instructions require, and also a clause requiring the subcontractors to include these provisions in any lower tier subcontracts. The prime Contractor shall be responsible for the compliance by any subcontractor or lower tier subcontractor with all these provisions.

47. Non-Federal Prevailing Wage Rates

(a) Any prevailing wage rate (including basic hourly rate and any fringe benefits), determined under State or tribal law to be prevailing, with respect to any employee in any trade or position employed under the contract, is inapplicable to the contract and shall not be enforced against the Contractor or any subcontractor, with respect to employees engaged under the contract whenever such non-Federal prevailing wage rate exceeds:

(1) The applicable wage rate determined by the Secretary of Labor pursuant to the Davis-Bacon Act (40 U.S.C. 3141 et seq.) to be prevailing in the locality with respect to such trade;

(b) An applicable apprentice wage rate based thereon specified in an apprenticeship program registered with the U.S. Department of Labor (DOL) or a DOL-recognized State Apprenticeship Agency; or

(c) An applicable trainee wage rate based thereon specified in a DOL-certified trainee program.

48. Procurement of Recovered Materials.

(a) In accordance with Section 6002 of the Solid Waste Disposal Act, as amended by the Resource Conservation and Recovery Act, the Contractor shall procure items designated in guidelines of the Environmental Protection Agency (EPA) at 40 CFR Part 247 that contain the highest percentage of recovered materials practicable, consistent with maintaining a satisfactory level of competition. The Contractor shall procure items designated in the EPA guidelines that contain the highest percentage of recovered materials practicable unless the Contractor determines that such items: (1) are not reasonably available in a reasonable period of time; (2) fail to meet reasonable performance standards, which shall be determined on the basis of the guidelines of the National Institute of Standards and Technology, if applicable to the item; or (3) are only available at an unreasonable price.

( ) Paragraph (a) of this clause shall apply to items purchased under this contract where: (1) the Contractor purchases in excess of $10,000 of the item under this contract; or (2) during the preceding Federal fiscal year, the Contractor: (i) purchased any amount of the items for use under a contract that was funded with Federal appropriations and was with a Federal agency or a State agency or agency of a political subdivision of a State; and (ii) purchased a total of in excess of $10,000 of the item both under and outside that contract.

FASHION PARK APARTMENTS

234, 251, & 257 FASHION PARK PLACE - OXNARD, CA 93033

CITY OF OXNARD HOUSING AUTHORITY
435 SOUTH D STREET - OXNARD, CA 93030

CONSTRUCTION NOTES

1. PROVIDE WORK AND MATERIALS IN ACCORDANCE WITH THE LATEST RULES AND REGULATIONS OF APPLICABLE STATE AND LOCAL CODES, LAWS, AND STATUES. NOTHING IN THE CONTRACT DOCUMENTS IS TO BE CONSTRUED AS REQUIRING OR PERMITTING WORK CONTRARY TO THESE CODES, LAWS AND STATUES.
2. CONTRACTOR IS RESPONSIBLE FOR MAINTAINING A PERMIT SET OF CONSTRUCTION DOCUMENTS, SPECIFICATIONS, AND ADDENDA ON SITE DURING ALL PHASES OF CONSTRUCTION FOR USE BY ALL TRADES AND SHALL PROVIDE ALL SUBCONTRACTORS WITH CURRENT CONSTRUCTION DOCUMENTS AS REQUESTED. ADDITIONALLY CONTRACTOR SHALL MAINTAIN ON SITE COPIES OF APPLICABLE CODES AND REFERENCE DOCUMENTS, OR HAVE DIRECT ACCESS VIA REMOTE COMPUTER AND/OR INTERNET ACCESS.
3. CONTRACTOR SHALL REVIEW ALL THE CONTRACT DOCUMENTS, THE PROJECT SITE AND BECOME FAMILIAR WITH THE SCOPE OF WORK AND INTENT OF THE CONTRACT DOCUMENTS. IT IS INCUMBENT UPON THE CONTRACTOR TO NOTIFY THE ARCHITECT IMMEDIATELY UPON DISCOVERING DISCREPANCIES OR CONFLICTS IN THE CONTRACT DOCUMENTS. DURING BIDDING, OBTAIN PROPER, WRITTEN CLARIFICATION OF THE DISCREPANCY, CONFLICT, OR UNCLEAR ITEM PRIOR TO SUBMISSION OF BIDS. DURING CONSTRUCTION, DO NOT PROCEED WITH DEMOLITION UNTIL THE DISCREPANCY OR CONFLICT IS RESOLVED.
4. EXAMINATION OF THE SITE AND PORTIONS THEREOF WHICH WILL AFFECT THIS WORK SHALL BE MADE IMMEDIATELY BY THE CONTRACTOR(S), WHO SHALL COMPARE IT WITH THE CONTRACT DOCUMENTS AND SATISFY THEMSELVES AS TO THE CONDITIONS UNDER WHICH WORK IS TO BE PERFORMED. CONTRACTOR(S) SHALL, AT SUCH TIME, CHECK LOCATIONS OF THE EXISTING STRUCTURES AND EQUIPMENT WHICH MAY AFFECT THE WORK. NO ALLOWANCE SHALL BE MADE FOR EXTRA EXPENSE TO WHICH MAY BE MAY BE INCURRED DUE TO FAILURE O NEGLECT ON THEIR PART TO MAKE SUCH EXAMINATION.
5. EACH CONTRACTOR SHALL BE RESPONSIBLE FOR REVIEWING ALL OF THE CONTRACT DOCUMENTS AS THEY RELATE TO THE CONTRACTOR'S WORK. IN ADDITION, EACH CONTRACTOR IS RESPONSIBLE TO COORDINATE THEIR OWNER WORK WITH HE WORK OF OTHER TRADES.
6. THE CONSTRUCTION DOCUMENTS ARE PROVIDED TO ILLUSTRATE THE DESIGN AND GENERAL TYPE OF CONSTRUCTION, MATERIALS, AND WORKMANSHIP THROUGHOUT. THE DOCUMENTS DO NOT ILLUSTRATE EVERY CONDITION. THE CONTRACTOR, IN ASSUMING RESPONSIBILITY FOR THE WORK INDICATED, SHALL COMPLY WITH THE DESIGN INTENT AS WELL AS THE LETTER IN WHICH THEY ARE PREPARED.
7. CONSTRUCTION DOCUMENTS ARE COMPLEMENTARY, AND WHAT IS CALLED FOR BY ANY WILL BE AS BINDING AS IF CALLED FOR BY ALL. ALL WORK SHOWN OR REFERRED TO ON ANY CONSTRUCTION DOCUMENT SHALL BE PROVIDED AS THOUGH ON ALL RELATED DOCUMENTS.
8. WORK LISTED, SHOWN, OR REASONABLY INFERRED ON ANY CONSTRUCTION DOCUMENT SHALL BE PROVIDED BY THE CONTRACTOR, EXCEPT WHERE NOTED OTHERWISE. THE GENERAL CONTRACTOR SHALL CLOSELY COORDINATE HIS WORK WITH THAT OF OTHER CONTRACTORS OR VENDORS AND OWNER TO ASSURE THAT SCHEDULES ARE MET AND THAT WORK IS DONE IN CONFORMANCE TO MANUFACTURER'S REQUIREMENTS.
9. UNLESS OTHERWISE NOTED, WORK SCOPE IS ASSUMED NEW UNLESS NOTED AS EXISTING.
10. THE USE OF THE WORD "PROVIDE" IN CONNECTION WITH ANY SCOPE DEFINED IN THE CONSTRUCTION DOCUMENTS IS INTENDED TO MEAN THAT SUCH SHALL BE FURNISHED, INSTALLED, AND CONNECTED, UNLESS OTHERWISE NOTED.
11. IT IS REQUIRED THAT ALL CONTRACTORS AND THEIR PERSONNEL ARE PROPERLY TRAINED AND COMPETENT TO CONSTRUCT AND OTHERWISE CARRY OUT THE INTENT OF THE WORK INCORPORATED INTO THE CONTRACT DOCUMENTS.
12. THE CONTRACT DOCUMENTS CONSIST OF THE COMPLETE DRAWINGS, PROJECT MANUAL, SPECIFICATIONS, REPORTS, BIDDING INFORMATION AND OTHER INFORMATION PREPARED BY THE ARCHITECT, IT'S CONSULTANTS OR THE CONSULTANTS HIRED BY THE OWNER. IN THE EVENT OF DISCREPANCIES OR CONFLICTS IN THE DOCUMENTS, INFORMATION IN THE SPECIFICATIONS SHALL TAKE PRECEDENCE OVER THE DRAWINGS, AND LARGE SCALE DRAWINGS SHALL TAKE PRECEDENCE OVER THE DRAWINGS, AND LARGE SCALE DRAWINGS SHALL TAKE PRECEDENCE OVER SMALLER SCALE DRAWINGS.
13. THE CONTRACTOR SHALL BE RESPONSIBLE FOR THE DEVELOPMENT, COORDINATION AND SAFE EXECUTION OF CONSTRICTION MEANS, METHODS, SHORING, AND PROCEDURES.
14. AT NO ADDITIONAL COST TO THE OWNER, CONTRACTOR SHALL CORRECT WORK INSTALLED IN CONFLICT WITH THE CONTRACT DOCUMENTS.
15. THE CONTRACTOR SHALL BE RESPONSIBLE FOR INITIATING, MAINTAINING AND SUPERVISING SAFETY PRECAUTIONS AND PROGRAMS IN CONNECTION WITH HIS WORK.
16. CONTRACTOR SHALL PROTECT AREA OF WORK AND NEW OR EXISTING MATERIALS AND FINISHES FROM DAMAGE WHICH MAY OCCUR FROM CONSTRUCTION, DEMOLITION, DUST, WATER, ETC.., AND SHALL PROVIDE AND MAINTAIN TEMPORARY BARRICADES OR ENCLOSURES AS REQUIRED TO PROTECT THE PUBLIC DURING THE PERIOD OF CONSTRUCTION. AT NO ADDITIONAL EXPENSE TO THE OWNER, THE CONTRACTOR SHALL REPAIR OR REPLACE DAMAGE TO NEW AND EXITING MATERIALS, FINISHES, STRUCTURES, AND EQUIPMENT TO THE SATISFACTION OF THE OWNER.
17. CONTRACTORS SHALL EXERCISE CONTROL OVER JOB CLEANING TO PREVENT ANY DIRT, DEBRIS, OR DUST FROM AFFECTING, IN ANY WAY, FINISHED WORK OR EXISTING TO REMAIN WORK OR CREATING A SAFETY HAZARD IN OR OUTSIDE JOBSITE.
18. ONLY APPROVED WORKING DRAWINGS, WITH THE STATEMENT "ISSUED FOR CONSTRUCTION" ON THE COVER SHEET, SHALL BE USED FOR CONSTRUCTION OF THIS PROJECT.
19. DIMENSIONS ON CONSTRUCTION DRAWINGS ARE TO FACE OF STUD WALL OR FACE OF CONCRETE, UNLESS OTHERWISE NOTED. CONTRACTOR SHALL NOT SCALE DRAWINGS. DIMENSIONS NOTED "(E)" MEANING EXISTING ARE TO BE FIELD VERIFIED PRIOR TO LAYING OUT WORK.
20. IN THE CASE OF DIMENSIONS NOTED AS "CLEAR" CONTRACTOR IS RESPONSIBLE FOR REVIEWING PLANS TO DETERMINE ACTUAL THICKNESS OF FINISHES AND MEASURE FROM OUTSIDE FACE OF WALL TO ADJACENT SURFACE.
21. CONTRACTOR SHALL LEAVE JOB SITE AND AFFECTED AREAS CLEAN AND IN AN ORDERLY MANNER READY FOR MOVE IN . THIS IS TO INCLUDE CLEANING OF THE INTERIOR AND EXTERIOR FACES OF NEW AND EXISTING GLASS.

SHEET INDEX

GENERAL	
G-000	COVER SHEET
G-001	CONDITIONS OF APPROVAL
STRUCTURAL	
S-1.0	GENERAL NOTES
S-1.1	GENERAL NOTES (CONT.)
S-2.0	FOUNDATION PLAN
S-2.1	FLOOR FRAMING
S-2.2	ROOF FRAMING PLAN
S-3.0	STRUCTURAL DETAILS
S-3.1	STRUCTURAL DETAILS
ARCHITECTURAL	
A-001	SITE PLAN
A-100	DEMO FLOOR PLANS - 1ST & 2ND
A-101	FLOOR PLANS - 1ST & 2ND
A-201	ELEVATIONS
A-301	BUILDING SECTIONS
A-401	LSV - KITCHENS
A-402	LSV - BATHROOM
A-501	SITE DETAILS
A-502	ACCESSIBLE DETAILS
A-503	ROOF, DOOR & WINDOW DETAILS
A-601	SCHEDULES
A-602	WALL LEGEND
A-701	MECHANICAL PRODUCT INFORMATION
MECHANICAL	
M-0.0	HVAC NOTES/DETAILS
M-1.0	HVAC PLAN
N-1	TITLE 24 CALCS
N-2	TITLE 24 CALCS
PLUMBING	
P-0.0	PLUMBING NOTES & DETAILS
P-1.0	PLUMBING PLAN
ELECTRICAL	
E-001	GENERAL NOTES, SYMBOLS & DETAILS
E-002	RESIDENTIAL LIGHTING COMPLIANCE FORMS
E-003	ELECTRICAL SITE PLAN
E-101	DEMO FLOOR PLANS 1ST & 2ND
E-103	ELECTRICAL FLOOR PLANS - 1ST & 2ND

SCOPE OF WORK

SECTION 504 DISABILITY COMPLIANT DESIGN AND MODIFICATION OF EXISTING 2 STORY 5-BEDROOM UNIT, CONVERT UNIT INTO A FIRST FLOOR ONE-BEDROOM ACCESSIBLE UNIT WITH ADDED AREA TO PROVIDE ADEQUATE BEDROOM SIZE; AND A 2-STORY TWO-BEDROOM UNIT NOT ACCESSIBLE BUT MODERNIZED. PROVIDE ONE-HOUR AND SOUND SEPARATION BETWEEN THE TWO UNITS. PAINT ENTIRE BUILDING EXTERIOR.

PROJECT DESCRIPTION

EXISTING BUILDING: Type V-B Not Sprinklered. No change for proposed T.I.
EXISTING OCCUPANCY GROUP: Group R-2 No change for proposed T.I.

CODE ENFORCEMENT JURISDICTION: CITY OF OXNARD - BUILDING AND SAFETY
ZONING JURISDICTION: CITY OF OXNARD - PLANNING DEPARTMENT

CODE	TITLE	EDITION	LOCAL	AMENDMENTS
Administrative	Bldg. Stnds. Admin Code	2019		
Building	California Bldg. Code	2019		
Access Compliance	California Bldg. Code	2019		
Mechanical	California Mech. Code	2019		
Electrical	California Electrical Code	2019		
Plumbing	California Plumbing Code	2019		
Fire Prevention	California Fire Code	2019	YES	
	State Fire Marshall Regs.	2017		
	NFPA 99	2018		
Zoning Code	CITY OF OXNARD			

EXISTING (251-257):	**AREA**
RESIDENTIAL BUILDING	**5,670 S.F.**
(2) 5 BEDROOM UNITS 1,564 S.F. x 2 =	**3,128 S.F.**
(2) 4 BEDROOM UNITS 1,271 S.F. x 2 =	**2,542 S.F.**

PROPOSED CONVERSION:	**AREA**
RESIDENTIAL BUILDING	**5,912 S.F.**
(2) 2 BEDROOM UNITS 1,166 S.F. x 2 =	**2,332 S.F.**
(2) 1 BEDROOM UNITS 398 S.F. x 2 =	**796 S.F.**
ADDITION 121 S.F. x 2 =	**242 S.F.**
TOTAL	**3,370 S.F.**

EXISTING TO CONVERT:	**AREA**
(2) 5 BEDROOM UNITS 1,564 S.F. x 2 =	**3,128 S.F.**

EXISTING (234):	**AREA**
RESIDENTIAL BUILDING	**3,912 S.F.**
(1) 5 BEDROOM UNITS	**1,564 S.F.**
(1) 4 BEDROOM UNITS	**1,271 S.F.**
(1) 2 BEDROOM UNITS	**965 S.F.**
EXISTING TO CONVERT:	**AREA**
(1) 5 BEDROOM UNIT	**1,564 S.F.**
TOTAL EXISTING TO CONVERT (251, 257 & 234):	**AREA**
(3) 5 BEDROOM UNITS 1,564 S.F. x 3 =	**4,692 S.F.**

PROPOSED CONVERSION:	**AREA**
RESIDENTIAL BUILDING	**4,033 S.F.**
(1) 2 BEDROOM UNITS	**1,166 S.F.**
(1) 1 BEDROOM UNITS	**398 S.F.**
ADDITION	**121 S.F.**
TOTAL	**1,685 S.F.**
TOTAL PROPOSED CONVERSION:	**AREA**
(3) 2 BEDROOM UNIT	**3,498 S.F.**
(3) 1 BEDROOM UNIT	**1,194 S.F.**
ADDITION	**363 S.F.**
TOTAL	**5,055 S.F.**

PROPERTY & PROJECT INFORMATION

ZONE:
EXISTING: R-4-PD (HIGH RISE RESIDENTIAL - PLANNED DEVELOPMENT)
PROPOSED: R-4-PD (HIGH RISE RESIDENTIAL - PLANNED DEVELOPMENT)

ASSESSOR'S PARCEL NUMBERS:
222-0-151-085 & 222-0-152

ADDRESS:
234, 251, & 257 FASHION PARK, OXNARD, CALIFORNIA 93036

APPROVALS REQUIRED:
B&S PERMITS

PROJECT DIRECTORY

OWNER
City of Oxnard Housing Authority
435 South D Street
Oxnard, California, 93030
Housing Director: Emilio Ramirez
Phone: 805-385-8096
Fax: 805-385-7969
E-mail : housingdirector@oxnard.org
Project Manager: Fredi Contreras
Phone: 805-385-7887
Fax: 805-385-7969
E-mail: fredi.contreras@oxnard.org

ARCHITECT
Lauterbach & Associates Architects
Ilona S. Scott, Architect
License Number: C11881
300 Montgomery Avenue
Oxnard, California, 93036
Phone: 805-988-0912
Fax: 805-981-4510
E-Mail: ilona.scott@la-arch.com

STRUCTURAL/ MECHANICAL/ PLUMBING ENGINEER
All Trade Engineering & Design
Shane Judd
License Numbers: C70991, M34632,
17 E. High Street, Suite A
Moorpark, California 93021
Phone: 805-552-4000
E-mail: juddsalltrade@yahoo.com

ELECTRICAL ENGINEER
JMPE Electrical Engineering
John Maloney
License Number: E016083
627 Olive Street
Santa Barbara, California 93101
Phone: 805-569-9216
E-Mail: maloney@jmpe.net

VICINITY MAP

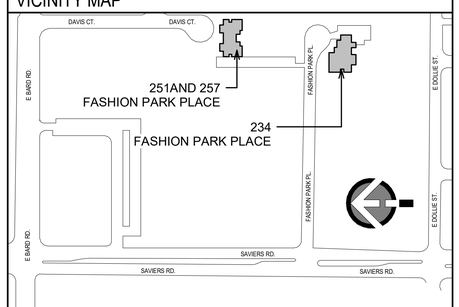

LAUTERBACH & ASSOCIATES
ARCHITECTS INC.
David C. Kesterson, Architect • Ilona Scott, Architect • Mark S. Pettit, Architect
300 MONTGOMERY AVENUE, OXNARD, CALIFORNIA 93036 | 805-988-0912 | FAX 805-981-4510 | www.la-arch.com

LICENSED ARCHITECT DAVID C. KESTERSON No. C21175 Ren. 02/25 STATE OF CALIFORNIA

LICENSED ARCHITECT ILONA SCOTT No. C11881 Ren. 06/21 STATE OF CALIFORNIA

FASHION PARK APARTMENTS
234, 251 & 257 FASHION PARK
OXNARD, CA, 93033

CITY OF OXNARD HOUSING AUTHORITY
435 S. D STREET
OXNARD, CALIFORNIA 93030

PLAN CHECK / PERMIT No. 20-1534

NO	DESCRIPTION	DATE
1	PLAN CHECK SUBMITTAL	08/10/2020

ISSUE

JOB NO. 20-190709

DRAWN BY: TJL
CHECKED BY: ISS
PROJECT MANAGER: ISS
PRINT DATE: 4/27/2023 2:48:21 PM

COVER SHEET

G-000

THESE DRAWINGS AND SPECIFICATIONS ARE THE PROPERTY AND COPYRIGHT OF LAUTERBACH & ASSOCIATES. ALL RIGHTS RESERVED, AND SHALL NOT BE USED ON ANY OTHER WORK OR PROJECT EXCEPT BY WRITTEN AGREEMENT WITH LAUTERBACH & ASSOCIATES. WRITTEN DIMENSIONS SHALL TAKE PRECEDENCE OVER SCALED DIMENSIONS AND SHALL BE VERIFIED ON THE JOB SITE. ANY DISCREPANCY SHALL BE BROUGHT TO THE NOTICE OF LAUTERBACH & ASSOCIATES PRIOR TO COMMENCEMENT OF ANY WORK.

G:\2019 Projects\20-190709 City of Oxnard\Set 4-Fashion\Drawings\Architectural\City of Oxnard - Fashion Park Apts - CD (Site and Elev's).rvt

Community Development Department
Planning Division
214 South C Street
Oxnard, California 93030
(805) 385-7858
Fax (805) 385-7417

CITY OF OXNARD CALIFORNIA

March 27, 2023

Anne Randall, Project Manager
Lauterbach & Associates Architects, Inc.
300 Montgomery Avenue, Unit C
Oxnard, CA 93036

Subject: **Project Name: Fashion Park Playground and Unit Improvements; Planning and Zoning Permit Nos. 23-140-05 (Minor Modification to Building Permit No. 20964) and 23-535-02 (Density Bonus); Fashion Park Apartments at 234, 251, and 257 Fashion Park Place *(APNs: 222-0-152-055 and 222-0-151-085)***

The City of Oxnard has reviewed your requests for modification of the above-referenced permit and ministerial approval of a Density Bonus. The requests include the conversion of three existing 5-bedroom units into three 1-bedroom units and three 2-bedroom units, and a 363 square foot addition, to increase the total number of units from 20 to 23. The Density Bonus concession (PZ No. 23-535-02) would reduce the number of required parking spaces from 66 to 44, to allow the net number of units to be increased without providing additional parking. The request also includes a proposal to convert 3,472 square feet of interior yard space in the south-western corner of the site to a new recreational playground.

Existing Land Use: The existing development currently contains a 30,229 square foot apartment complex comprising six buildings with 20 residential townhome units, 44 parking spaces, and 24,112 square feet of interior yard space on a 1.76 acre project site.

General Plan & Zoning Conformity: The 2030 General Plan land use designation on the subject property is Residential Medium High (RMH), and the property is in the High Rise Residential (R-4) Zone. The General Plan and Zoning Designation both allow for the existing multi-family residential development.

Background: The original project was built in the 1970s by the Oxnard Housing Authority as an affordable housing project, in accordance with the requirements at the time. The original development, permitted under Building Permit No. 20964, contained 20 units and 46 parking spaces. Over the following years minor site changes have resulted in changes to the parking configuration and number. The changes resulted in a net loss of two parking spaces, leaving a total of 44 spaces onsite.

Environmental Determination: In accordance with the California Environmental Quality Act (CEQA) Guidelines Section 15301 (Class 1), projects involving "existing facilities where negligible or no expansion of use" may be found to be exempt from the requirements of CEQA. The project consists of improvements to an existing development. The three additional units will

be within the existing building footprint with the exception of a small 363 square foot addition, with no significant expansion of use. This application also proposes to convert a portion of the existing lawn area to a playground for recreational use. Furthermore, the site has no habitat value for endangered, rare, or threatened species; is adequately served by public utilities and services, and will have no significant impacts on traffic, noise, air quality, or water. Therefore, Staff has determined that there is no substantial evidence that the project may have a significant effect on the environment.

Analysis: The proposed modifications associated with this request include site changes:

a) ***Site Design:*** The project proposes to convert three existing 5-bedroom units to three 2-bedroom and three 1-bedroom units, and is currently in plan check review (No. 20-1534). The project also proposes to convert 3,472 square feet of existing lawn area to a playground for recreational use, and is currently in plan check review (No. 23-0153). Subject to the approval of the Density Bonus, the project will continue to comply with the requirements of the R-4 Zone, as shown in the table below.

DEVELOPMENT STANDARD	REQUIREMENT	PROPOSED	COMPLIES?
Max. building height 16-73	4 stories not to exceed 45 feet from top of curb; SUP may allow upto11 stories or 100'	2 stories (Approximately 25 feet) - No Change	Existing
Density 16-74	1 unit per 1,500 square feet lot area. 47,045/1,500 = 31 unit maximum Any lot with an average width between 50 and 65' shall comply with the R3 zone standards. No more than 2 du on any lot with an average width between 40'-50' or with an area between 4,000 and 5,000 sqft; No more than 1 du on any lot with an average width less than 40' or on lots less than 4,000 sqft.	23 units	Yes
Front yard 16-75	20 feet; 15 feet if access is provided from the alley; 30 feet when abutting designated scenic corridors, per CD-9.4 of the 2030 General Plan.	19 feet (Access provided from the alley)	Yes
Side yard 16-76	5 feet for 1 & 2 stories; shall be increased 2.5' for each story over 2.	5 feet minimum (No Change)	Existing
Street side yard 16-76	Need not exceed 10'	N/A	N/A

Rear yard 16-77 (A)	5 feet for 1 and 2 story buildings and be increased 2.5' for each story over two. Street rear yards shall not exceed 10'	10 feet minimum (No Change)	Existing
Accessory Building 16-67 (B)	May be located in RY setback if bldg is 6' from nearest part of main bldg, is one story in height.	N/A	N/A
Interior yard space 16-78	30% of lot area, with min. dimension of 15' x 15'. 25% of required IYS may be provided by deck space if minimum 10' x 10' and 200 square feet and directly accessible from the units served. Areas must be open from ground to sky (see exceptions 16-304 - 16-307). May not include vehicle parking or circulation areas.	24,112.23 sq. ft. (32%)	Yes
Parking spaces Resident 16-622	1 space in a garage for each 1-bedroom unit, and 2 spaces in a garage for each unit with 2 -5 bedrooms. 3 garage spaces for 6 bedrooms; 4 garage spaces for 7 bedrooms, 5 garage spaces for 8+ bedrooms.	44 spaces provided, 43 required	Yes
Parking spaces Visitor 16-622	For 1* 30 units, 1 visitor space for each unit, and 0.5 visitor spaces per unit thereafter.	0 spaces provided, 23 spaces required	Yes, subject to Density Bonus permit
Fences/hedges - front yard 16-308	Must be at least 50% open, and may not exceed 42 inches. Or if a solid wall, then may not exceed 18 inches.	No Fence	Yes
Fences/hedges - side & rear yards 16-309	Not to exceed 7 feet in height.	No Change	Yes
Parking landscaping 16-641	10-foot wide strip along any street or alley. 5% of parking area. For every 10 spaces, 9 foot finger w/2 trees	No parking landscaping provided parking spaces accessed directly from the alley. No change.	Yes
ATTACHED DWELLING UNIT STANDARDS APPLIES TO PROJECTS OF 6 OR MORE UNITS			
Min. Dwelling Size 16-362(A)	One bedroom: 450 sq ft Two bedroom: 800 sq.ft	Minimum 1-bedroom Size - 552.92 Sq. Ft. Minimum 2-bedroom Size - 1,239 Sq.Ft.	Yes
Building Separation 16-362 (B)	Equal to the height of the taller structured	No Change	Yes
Recreation Facilities	Include at least one of the following:	New playground is	Yes

(12 units or more only) 16-362 (C)	Swimming pool, spa, tennis, basketball, or volleyball courts, BBQ/picnic area, recreation building, exercise course, children's play equipment, or other's as approved by PC	proposed	
Open Area (12 units or more) 16-362 (D)	One landscape area of not less than 2,500 sq.ft. with minimum dimension of not less than 35'	Existing	Yes
Distance to garage from DU 16-362 (E)	75'	N/A	N/A
Balconies & Patios 16-362 (F)	All 2nd story dwelling units shall have at least one patio or balcony having a minimum dimension of 10'	All units have private open space.	Yes
Balcony Enclosure 16-362 (G)	All balconies and patios shave have railings or walls which provide at least 50% enclosure	Private space is fenced	Yes
Storage Areas 16-362(H)	Each unit shall have a storage area of at least 225 cubic feet. Can't intrude into the minimum garage dimensions	No Change	Yes
Garages 16-362(I)	Automatic garage door openers and architectural treatment or detail	N/A	N/A
Utility Meters 16-362 (J)	Wall mounted meters shall be screened or integrated into the building design	No Change	Yes
Refuse Enclosures 16-362 (K)	Designed to reflect the major design elements or details of the residential units & provide ped access.	No Change	Yes

The Project is also proposing a small 363 square foot addition to accommodate the entrance to the new units. The resulting development will be a 30,592 square foot apartment complex containing 23 residential townhome units, 44 parking spaces, and 24,112 square feet of interior yard space, including a playground for recreational use. As identified in the table above, and subject to approval of the Density Bonus, the proposed improvements would not alter the site compliance with the standards of the R-4 Zone.

b) ***Circulation and Parking:*** Under the building permit which entitled the project, the site consisted of 20 units and 46 parking spaces. As noted in the background section above, as the result of various improvements made over the subsequent years, the site currently contains 44 parkings spaces. Per Oxnard City Code (OCC) Section 16-622 and the proposed project, a total of 66 parking spaces–43 resident spaces and 23 visitor spaces–are required. By converting three 5-bedroom units into three 1-bedroom units and three 2-bedroom units, the parking requirements for the site increases by six spaces (1 space for the 1-bedroom units, 2 spaces for each 2-bedroom units, and one visitor space for each unit). Additionally, as required under the California Building Code, the site is required to provide an ADA space, of which three are currently on site. The applicant is requesting a Density Bonus concession to allow for the reduction of City Parking requirements (Planning and Zoning Permit No. 23-535-02). Subject to the approval of the Density Bonus, the required parking for the site would be reduced to 44 spaces, making the project consistent with the City requirements and prior approvals where no changes are proposed.

c) ***Density Bonus:*** As noted above, the Project includes an administrative request for concession and incentives pursuant to Section 65915(d) of the Government Code and OCC Section 16-410(L). Under the Government Code and OCC, if a development provides at least 10% of the total units for low income households, at least 5% for very-low income households, or at least 10% for persons and families of moderate income households in a common interest development, then, the developer is eligible for up to one concession or incentive. As proposed, 100% of the residential units will be designated as affordable housing which, pursuant to Government Code Section 65915(d)(2)(D), would make the project eligible for up to four concessions or incentives. The one concession requested is as follows:

1. Reduction of the required residential parking from 66 spaces to 44 residential spaces.

The site is currently legal non-conforming with regard to the required parking for the site which, in its current configuration, requires 66 parking spaces pursuant to the OCC; only 44 parking spaces are provided. As the site is currently fully developed, it is not feasible to provide the additional required parking onsite, without a significant site redesign or the use of vehicle lifts. Both of these would result in significant cost, due to the required reconstruction and/or infrastructure improvements required. Therefore, the requested concession allows for the additional affordable units and would result in identifiable and actual cost reductions. Pursuant to changes in OCC Section 16-410(F), the Density Bonus is ministerial and falls under the authority of the decision maker on the underlying permit. As conditioned, and in compliance with state law, the project shall provide a minimum 10 percent of the units for low income households and shall be granted one concession or incentive.

The Planning Division approves the requested minor modification, based upon the following findings and subject to compliance with the following conditions:

FINDINGS

1. The minor modification is consistent with the 2030 General Plan, land use and zoning designations on the property, and City of Oxnard Building Permit #20964.
2. The minor modification is categorically exempt from the provisions of the California Environmental Quality Act (CEQA), under Section 15301.
3. The proposed improvements does not significantly intensify the use of the parcel or have any additional adverse effect on abutting parcels or the general health, safety, or welfare of the public.

CONDITIONS

1. This permit is granted for the properties described in the application on file with the Planning Division, and may not be transferred from one property to another. (PL, G-1)
2. This permit is granted for the plans dated March 27, 2023 on file with the Planning Division. The project plans shall conform to the plans, except as otherwise specified in these conditions.
3. By commencing any activity related to the project or using any structure authorized by this permit, Permittee accepts all of the conditions and obligations imposed by this permit and waives any challenge to the validity of the conditions and obligations stated therein. (CA, G-5)
4. Applicant shall obtain a building permit for any new construction or modifications to structures, including interior modifications, authorized by this permit.
5. Before the City issues building permits, Developer shall include a copy of this approval letter with all sets of construction documents and specifications for the project.
6. Prior to issuance of building permits, Developer shall correct all violations of the City Code existing on the project property for which the Code Compliance Division has open cases.
7. Prior to issuance of building permits, Applicant shall pay a document imaging fee for the Planning files in an amount calculated by Planning staff at the time of building permit review based on fees then in effect (PL/B, *PL-16*).
8. Developer shall complete the "Notice of Land Use Restrictions and Conditions" form, using the form provided by the City, for recording with the Ventura County Recorder. Before the City issues building permits, Developer shall submit the original completed, signed and notarized document, together with the required fees to the Planning Manager. (PL, G-8)
9. Prior to issuance of building permits, Developer shall enter into an agreement in a form approved by the City Attorney or provide evidence of existing agreement ensuring the continued availability of ten (10) percent of the units (2) must be rented at a level affordable to persons of families of low income, which qualified the applicant for a Density Bonus. The agreement shall be recorded in the Office of the Ventura County Recorder. The agreement shall establish specific compliance standards and specific remedies available to the City of such compliance standards are not met. The agreement shall, among other things, specify the number of low income affordable units by number of bedrooms, standards for qualifying household incomes or other qualifying criteria, a required annual report, and monitoring fees. Developer hereby agrees to deposit funds for any staff time expended for preparation of the agreement and subsequent compliance with said agreement. The term of the agreement shall be for a minimum of 55 years.

10. Prior to offering the affordable units for rent, the Owner/Developer must submit to the Housing Director the proposed rental amounts for the affordable units for review and approval.
11. Developer agrees, as a condition of adoption of this resolution, at Developer's own expense, to indemnify, defend and hold harmless the City and its agents, officers and employees from and against any claim, action or proceeding to attack, review, set aside, void or annul the approval of the resolution or any condition attached thereto or any proceedings, acts or determinations taken, done or made prior to the approval of such resolution that were part of the approval process. (CA, G-6)
12. This minor modification shall automatically become null and void 12 months from the date of this approval, unless Applicant has diligently developed the proposed project, as shown by the issuance of a grading, foundation, or building permit and the construction of substantial improvements.

This letter serves as official approval of your minor modification and density bonus requests, and pertains only to those modifications described herein. Enclosed is a set of the approved plans, for your use and/or your records. If you have any questions about this approval, please contact Evan Sahagun, Assistant Planner, at (805) 385-7863 or at evan.sahagun@oxnard.org.

Sincerely,

Joe Pearson II, 3/27/2023
Planning & Environmental Services Manager — Date

Attachments:
1) Approved Project Plans, Unit Improvements
2) Approved Project Plans, New Playground
3) Notice of Land Use Restrictions

Cc:
David Kesterson, Architect, via email (david.kesterson@la-arch.com)
Fredi Contreras, Project Manager, via email (fredi.contreras@oxnard.org)

LAUTERBACH & ASSOCIATES
ARCHITECTS INC.
David C. Kesterson, Architect • Ilona Scott, Architect • Mark S. Pettit, Architect
300 MONTGOMERY AVENUE, OXNARD, CALIFORNIA 93036 | 805-988-0912 | FAX 805-981-4910 | www.la-arch.com

LICENSED ARCHITECT ILONA SCOTT No. C11881 Ren. 06/21 STATE OF CALIFORNIA

FASHION PARK APARTMENTS
234, 251 & 257 FASHION PARK
OXNARD, CA, 93036

CITY OF OXNARD HOUSING AUTHORITY
435 S. D STREET
OXNARD, CALIFORNIA 93030

PLAN CHECK / PERMIT No. 20-1534

NO	DESCRIPTION	DATE

ISSUE

JOB NO. 20-190709
DRAWN BY: Author
CHECKED BY: Checker
PROJECT MANAGER: Approver
PRINT DATE: 3/28/2023 1:19:16 PM

CONDITIONS OF APPROVAL

G-001

THESE DRAWINGS AND SPECIFICATIONS ARE THE PROPERTY AND COPYRIGHT OF LAUTERBACH & ASSOCIATES. ALL RIGHTS RESERVED, AND SHALL NOT BE USED ON ANY OTHER WORK OR PROJECT EXCEPT BY WRITTEN AGREEMENT WITH LAUTERBACH & ASSOCIATES. WRITTEN DIMENSIONS SHALL TAKE PRECEDENCE OVER SCALED DIMENSIONS AND SHALL BE VERIFIED ON THE JOB SITE. ANY DISCREPANCY SHALL BE BROUGHT TO THE NOTICE OF LAUTERBACH & ASSOCIATES PRIOR TO COMMENCEMENT OF ANY WORK.

G:\2019 Projects\20-190709 City of Oxnard Sec 4-Fashion\Drawings\Architectural\City of Oxnard - Fashion Park Apts - CD (Site and Elevs).rvt

STRUCTURAL GENERAL NOTES

GENERAL NOTES

1. EACH CONTRACTOR SHALL CHECK AND VERIFY ALL DIMENSIONS AND CONDITIONS AT THE PROJECT SITE BEFORE EXECUTING ANY WORK. HE SHALL NOTIFY THE OWNER, ARCHITECT AND STRUCTURAL ENGINEER OF ANY AND ALL DISCREPANCIES BEFORE PROCEEDING. FOR CLARIFICATION OF DIMENSIONS, DO NOT SCALE FROM DRAWINGS. NUMERICAL DIMENSIONS SHALL TAKE PRIORITY OVER SCALING THE DRAWING.
2. THE LATEST EDITION OF THE GENERAL CONDITIONS AS ACCEPTED BY THE A.I.A. SHALL BE CONSIDERED AS PART OF THESE SPECIFICATIONS.
3. ALL WORK SHALL COMPLY WITH THE 2019 CBC REQUIREMENTS, AND BE APPLICABLE WITH LOCAL CITY ORDINANCES.
4. THE CONTRACTOR SHALL REVIEW THE PLANS AND SPECIFICATIONS WITH THE STRUCTURAL ENGINEER BEFORE BEGINNING CONSTRUCTION.
5. EACH CONTRACTOR SHALL OBTAIN & PAY FOR ALL PERMITS REQUIRED BY LOCAL AUTHORITIES BEFORE PROCEEDING WITH HIS RESPECTIVE INSTALLATION. HE SHALL ALSO ARRANGE & PAY FOR ALL INSPECTIONS AND EXAMINATIONS REQUIRED BY THOSE AUTHORITIES.
6. ALL EXISTING EQUIPMENT REMOVED BY DEMOLITION OR REHABILITATION SHALL BE DISPOSED OF AS DIRECTED BY THE OWNER.
7. REPAIR AND REPLACE ALL PROPERTY DAMAGE BY WORK UNDER THIS PROJECT TO THE SATISFACTION OF THE OWNER AND THE ARCHITECT. ALL PIPING, CONDUIT, ETC. WHICH IS ENCOUNTERED SHALL BE CALLED TO THE ATTENTION OF THE OWNER AND THE ARCHITECT AND SHALL BE ADEQUATELY SUPPORTED UNTIL PERMANENT SUPPORT IS PROVIDED OR REMOVAL IS AUTHORIZED.
8. WHEREVER IN THESE DRAWINGS ANY MATERIAL OR PROCESS IS INDICATED, IT IS FOR THE PURPOSE OF FACILITATING THE DESCRIPTION OF THE MATERIAL OR PROCESS DESIRED. THE CONTRACTOR MAY OFFER ANY MATERIAL OR PROCESS DEEMED EQUIVALENT BY THE OWNER, ARCHITECT AND STRUCTURAL ENGINEER TO THAT MATERIAL OR PROCESS INDICATED OR SPECIFIED.
9. EACH CONTRACTOR SHALL GUARANTEE, BE RESPONSIBLE FOR, & MAKE GOOD ANY AND ALL DEFECTS DUE TO FAULTS OF HIS TRADE FOR LABOR, LEAKS, OR MATERIALS FOR A PERIOD OF ONE YEAR MINIMUM FOLLOWING THE ACCEPTANCE OF THE WORK BY THE OWNER AND ARCHITECT.
10. THE CONTRACTOR SHALL SUPERVISE & DIRECT THE PROJECT DESCRIBED HEREIN. THE CONTRACTOR SHALL BE SOLELY RESPONSIBLE FOR ALL CONSTRUCTION MEANS, METHODS, TECHNIQUES, SEQUENCES & PROCEDURES AND FOR COORDINATING ALL PORTIONS OF THE WORK UNDER CONTRACT. CONTRACTOR HAS SOLE RESPONSIBILITY FOR THE SAFETY & PERFORMANCE OF THE WORK. SAFETY COMPLIANCE SHALL BE IN ACCORDANCE WITH OSHA, U.S. DEPT. OF LABOR, STATE AND LOCAL REQUIREMENTS.
11. THE CONTRACTOR SHALL FURNISH AND BE RESPONSIBLE FOR ADEQUATE SHORING, BRACING, AND PROTECTIVE MEASURES TO SAFELY EXECUTE THE WORK.

GREEN BUILDING NOTES

1. PROVIDE FLASHING FOR ALL NEW ROOF VALLEYS, AROUND NEW WINDOWS, DOORS & AT NEW CHIMNEYS TO ROOF INTERSECTIONS.
2. ALL MATERIALS DELIVERED TO THE CONSTRUCTION SITE SHALL BE PROTECTED FROM RAIN OR OTHER SOURCES MOISTURE.
3. NEW HARDWOOD, PLYWOOD, PARTICLE BOARD, AND MEDIUM DENSITY FIBERBOARD COMPOSITE WOOD PRODUCTS USED IN THE INTERIOR OR EXTERIOR OF THE BUILDING SHALL MEET THE FORMALDEHYDE LIMITS LISTED IN TABLE 4.504.5
4. THE FORMALDEHYDE EMISSIONS FORM, FORM GRN 3 SHALL BE COMPLETED PRIOR TO FINAL INSPECTION APPOVAL. THE MFR'S SPECIFICATIONS SHOWING FORMALDEHYDE CONTENT FOR ALL APPLICABLE WOOD PRODUCTS SHALL BE READILY AVAILABLE AT THE JOB SITE & BE PROVIDED TO THE FIELD INSPECTOR FOR VERIFICATION.
5. A 4" THK. BASE OF 1/2" OR LARGER CLEAN AGGREGATE SHALL BE PROVIDED FOR THE PROPOSED SLAB ON GRADE CONSTRUCTION.
6. A VAPOR BARRIER SHALL BE PROVIDED IN DIRECT CONTACT WITH CONCRETE FOR THE PROPOSED SLAB ON GRADE CONSTRUCTION.
7. BUILDING MATERIALS WITH VISIBLE SIGNS OF WATER DAMAGE SHALL NOT BE INSTALLED. WALL AND FLOOR FRAMING SHALL NOT BE ENCLOSED UNTIL IT IS INSPECTED AND FOUND TO BE SATISFACTORY BY THE BUILDING INSPECTOR.
8. NEW RESIDENTIAL GRADE EQUIPMENT & APPLIANCES PROVIDED AND INSTALLED SHALL BE ENERGY STAR LABELED IF ENERGY STAR IS APPLICABLE TO THAT EQUIPMENT OR APPLIANCE.
9. ALL DUCT AND OTHER RELATED AIR DISTRIBUTION COMPONENT OPENINGS SHALL BE COVERED WITH TAPE, PLASTIC, OR SHEET METAL UNTIL THE FINAL STARTUP OF THE HEATING & COOLING EQUIPMENT.
10. ARCHITECTURAL PAINTS & COATINGS, ADHESIVES, CAULK & SEALANTS SHALL COMPLY WITH THE VOLATILE ORGANIC COMPOUND (VOC) LIMITS LISTED IN TABLE 4.504.3
11. CONSTRUCTION WASTE SHALL BE REDUCED BY 50% AND SHALL BE HANDLED BY A CITY CERTIFIED HAULER.
12. THE HVAC, REFRIGERATION & FIRE SUPPRESSION EQUIPMENT SHALL NOT CONTAIN CFC OR HALONS.
13. AN AIR FILTER WITH A MINIMUM EFFICIENCY REPORTING VALUE (MERV) OF 8 OR HIGHER SHALL BE INSTALLED IN THE MECHANICAL SYSTEM FOR OUTSIDE AND RETURN AIR PRIOR TO OCCUPANCY.
14. THE VOC CONTENT VERIFICATION CHECKLIST, FORM GRN 2, SHALL BE COMPLETED AND VERIFIED PRIOR TO FINAL INSPECTION APPROVAL. THE MANUFACTURER'S SPECIFICATIONS SHOWING VOC CONTENT FOR ALL APPLICABLE PRODUCTS SHALL BE READILY AVAILABLE AT THE JOB SITE & BE PROVIDED TO THE FIELD INSPECTOR FOR VERIFICATION.
15. INSTALLED AUTOMATIC IRRIGATION SYSTEM CONTROLLERS SHALL BE WEATHER OR SOIL MOISTURE BASED CONTROLLERS (CGBSC 4.304.1)
16. RETENTION BASINS OF SUFFICIENT SIZE SHALL BE UTILIZED TO RETAIN STORM WATER ON THE SITE.
17. WHERE STORM WATER IS CONVEYED TO A PUBLIC DRAINAGE SYSTEM, COLLECTION POINT, GUTTER OR SIM. DISPOSAL METHOD, WATER SHALL BE FILTERED BY USE OF A BARRIER SYSTEM, WATTLE OR OTHER METHOD APPROVED BY THE ENFORCING AGENCY.
18. COMPLIANCE WITH A LAWFULLY ENACTED STORM WATER MANAGEMENT ORDINANCE

FRAMING NOTES

1. ALL FRAMING AND CARPENTRY SHALL BE DONE IN ACCORDANCE WITH THOSE APPLICABLE SECTIONS OF CHAPTER 23 OF THE LATEST ADOPTED EDITION OF THE CBC AND DETAILS INDICATED ON THE DRAWINGS.
2. ALL STRUCTURAL LUMBER SHALL BE DOUG FIR-LARCH GRADE IN ACCORDANCE WITH THE LATEST EDITION OF "GRADING AND DRESSING RULES #16 OF THE WEST COAST LUMBER INSPECTION BUREAU" AND SHALL HAVE A MOISTURE CONTENT OF 19% MAX OF THE FOLLOWING GRADES:

   RAFTERS AND JOISTS – #2 AND BETTER
   BEAMS – #1
   POSTS – SELECT STRUCTURAL
   STUDS, PLATES, ALL OTHERS – STUD GRADE
   } UNLESS NOTED OTHERWISE

   NOTIFY ENGINEER IF OTHER SPECIES OF WOOD ARE DELIVERED TO THE SITE OR ARE PART OF THE EXISTING BUILDING.
3. WOOD FRAMING MEMBERS (INCLUDING WOOD SHEATHING) THAT REST ON CONCRETE AND ARE LESS THAN 8 INCHES FROM EXPOSED EARTH SHALL BE OF NATURALLY DURABLE OR PRESERVATIVE-TREATED WOOD.
4. STRUCTURAL MEMBER CUTS, NOTCHES, AND BORES SHALL BE PER 1/S-3.0
5. 2x SOLID BLOCK SHALL BE PLACED BETWEEN JOISTS OR RAFTERS AND AT ALL SUPPORTS.
6. ALL BOLTS TO HAVE FLAT WASHERS UNDER HEAD AND NUT AND AT ALL HOLDOWN BOLTS AND ANCHOR BOLTS. ALL BOLT HOLES SHALL BE 1/32" (MIN), 1/16" (MAX) OVER-SIZED (INSPECTOR TO VERIFY). PROVIDE LEAD HOLE 40-70% OF THREADED SHANK DIA. & FULL DIA. FOR SMOOTH SHANK PORTION.
7. ALL PLYWOOD EXPOSED TO WEATHER SHALL BE EXTERIOR GRADE. WOOD STRUCT. PANELS SHALL COMPLY WITH PS1-09 DOUG FIR-LARCH AND/OR PS2-10 OSB.
8. FRAMING SURROUNDING ALL METAL FIREPLACE VENTS SHALL BE CONTINUOUS 2X4 STUDS @ 16" O.C. SHEATHED WITH 1/2" STRUCT 1 PLYWOOD AND WITH DRAFT STOPS @ 10'-0" o.c. MAX. (FOR PLYWOOD NAILING, SEE ROOF NAILING SCHEDULE.)
9. GLU-LAMINATED MEMBERS SHOULD BE FABRICATED IN ACCORDANCE WITH BUILDING DEPARTMENT STANDARDS AND A.I.T.C. 117-79. A CERTIFICATE OF INSPECTION TO BE SUBMITTED TO THE BUILDING DEPARTMENT PRIOR TO ERECTION. SIMPLE SPAN GLU-LAMS ARE TO BE COMBINATION 24F-V4 CANTILEVER GLU-LAMS TO BE COMBINATION 24F-V8.
10. COMPOSITE FRAMING MEMBERS SHALL BE BY TRUSS JOIST WEYERHAEUSER / BOISE CASCADE U.N.O. FOLLOW MANUFACTURER'S RECOMMENDATIONS FOR STORAGE & INSTALLATION.

    MICROLLAM: 1.8E WS MICROLLAM LVL
    PARALLAM / VERSA LAM: 2.0E WS PARALLAM PSL / Fb = 3100psi
    TIMBERSTRAND: TIMBERSTRAND LSL RIMBOARD 1 1/2" WIDE
    1.5E TIMBERSTRAND LSL HEADER 3 1/2" WIDE
11. PROVIDE 2X6 STUDS IN PLUMBING WALLS TO PREVENT EXCESSIVE NOTCHING AND BORING OF STUDS
12. PROVIDE TWO LAYERS OF GRADE D PAPER BETWEEN SHEAR PANEL AND LATH
13. FIRE BLOCKING SHALL BE INSTALLED AT 20 FT. MAX. INTERVALS AND SHALL BE INSTALLED SO THAT THERE WILL NOT BE OPEN SPACES EXCEEDING 100 SQ. FT. WITHIN CONCEALED SPACES OF EXTERIOR WALL FINISH AND OTHER EXTERIOR ARCHITECTURAL ELEMENTS ERECTED OF COMBUSTIBLE CONSTRUCTION.
14. FIRE BLOCK STUD WALLS AND PARTITIONS (HORIZONTALLY AT 10 FT INTERVALS AND VERTICALLY AT THE CEILING AND FLOOR LEVELS), ENCLOSED AND CONCEALED SPACES, AND AT OPENINGS AROUND VENTS, PIPES, DUCTS, CHIMNEYS, BETWEEN ATTIC AND CHIMNEY CHASE, AT STAIR STRINGERS, AND SIMILAR PLACES AT CEILING AND FLOOR LEVELS.
15. FLOOR JOISTS, CEILING JOISTS, AND RAFTERS 12" OR MORE IN DEPTH SHALL BE SUPPORTED LATERALLY BY BRIDGING AT INTERVALS NOT EXCEEDING 8 FT., UNLESS BOTH EDGES ARE HELD IN LINE.

SOILS ENGINEERING

1. THE SOILS REPORT, NUMBER N/A PREPARED BY N/A DATED N/A IS PART OF THESE PLANS AND ALL RECOMMENDATIONS THEREIN SHALL BE COMPLIED WITH.
2. SPREAD FOOTINGS – ALLOWABLE BEARING = 1500 PSF
   CONTINUOUS FOOTINGS – ALLOWABLE = 1500 PSF
   COEFFICIENT OF FRICTION – ALLOWABLE = 0.25
   PASSIVE EARTH PRESSURE – ALLOWABLE = 250 PCF
   EXPANSIVE INDEX = ________
3. CANTILEVER RETAINING WALLS:
   EQUIVALENT FLUID PRESSURE – 35 PCF & 43 PCF
4. RESTRAINED RETAINING WALLS:
   EQUIVALENT FLUID PRESSURE – 35 PCF & 43 PCF
5. THE ABOVE VALUES MAY BE INCREASED BY 1/3 FOR WIND AND SEISMIC LOADS
6. THE ENGINEER HAS INSPECTED THE SUPPORTING SOILS ON THE SITE AND IS KNOWLEDGEABLE OF THE SOILS IN THE AREA. FINDINGS ARE AS FOLLOWS:
   (1) THE EXISTING FOUNDATION APPEARS TO BE IN A SUFFICIENT STRUCTURAL CONDITION TO BE ADEQUATE TO SUPPORT THE PROPOSED STRUCTURE
7. ALL GRADING, SLAB, FOOTING, AND PAD PREPARATION WORK SHALL COMPLY WITH THE RECOMMENDATIONS AS STATED IN THE REFERENCED REPORT ABOVE
8. PRIOR TO THE CONTRACTOR REQUESTING A BUILDING DEPARTMENT FOUNDATION INSPECTION, THE SOILS ENGR SHALL ADVISE THE BUILDING OFFICIAL IN WRITING THAT:
   (1) THE BUILDING PAD WAS PREPARED IN ACCORDANCE WITH THE SOILS REPORT
   (2) THE UTILITY TRENCHES HAVE BEEN PROPERLY BACKFILLED AND COMPACTED
   (3) THE FOUNDATION EXCAVATIONS COMPLY WITH THE INTENT OF THE SOILS REPORT

CONTACT INFORMATION

ALL-TRADE ENGINEERING
SHANE JUDD, P.E.
(805) 552-4000
17 EAST HIGH STREET
MOORPARK, CA 93021

NAILING SCHEDULE — TABLE (2304.10.1)

	ELEMENT/CONNECTION	FASTENER	LOCATION
	ROOF		
1.	Blocking between ceiling joists, rafters or trusses to top plate or other framing below	3 - 8d common (21/2″ × 0.131″) 3-10d box (3"x0.128") 3 - 3″ × 0.131″ nails 3 - 3″ 14 gage staples, 7/16" crown	Toenail each end
	Blocking between rafters or truss not at the wall top plate, to rafter or truss	2 - 8d common (21/2″ × 0.131″) 2 - 3″ × 0.131″ nails 2 - 3″ 14 gage staples	toenail each end
		2-16d common (3 ½"x0.162") 3-3"x0.131" nails 3-3" 14 gage staples	end nail
	Flat blocking to truss and web filler	16d common (3 ½"x0.162") @6" o.c. 3-3"x0.131" nails @ 6" o.c. 3-3" 14 gage staples @ 6" o.c.	Face nail
2.	Ceiling joists to top plate	3-8d common 3-10d box 3-3"x0.131" nails 3-3" 14 gage staples, 7/16" crown	Toenail each joist
3.	Ceiling joist not attached to parallel rafter, laps over partitions (no thrust) (Table and Section2308.7.3.1)	3-16d common 4-10d box 4-3"x0.131" nails 4-3" 14 gage staples, 7/16" crown	Face nail
4.	Ceiling joists attached to parallel rafter (heel joint) (Table and Section2308.7.3.1)	Table 2308.7.3.1	Face nail
5.	Collar tie to rafter	3-10d common 4-10d box 4-3"x0.131" nails 4-3" 14 gage staples, 7/16" crown	Face nail
6.	Rafter or roof truss to top plate (Table and section 2308.7.5)	3-10 common 3-16d box 4-10d box 4-3"x0.131" nails 4-3" 14 gage staples, 7/16" crown	Toenail (c)
7.	Roof rafters to ridge valley or hip rafters; or roof rafter to 2" ridge beam	2-16d common 3-10d box 3-3"x0.131" nails 3-3" 14 gage staples, 7/16" crown	End nail
		3-10d common 3-16d box 4-10d box 4-3"x0.131" nails 4- 3" 14 gage staples, 7/16" crown	Toenail
	WALL		
8.	Stud to Stud (not at braced wall panels)	16d common	24" o.c. face nail
		10d box 3"x0.131" nails 3" 14 gage staples, 7/16" crown	16" o.c. face nail
9.	Stud to stud and abutting studs at intersecting wall **corners (at braced wall panels)**	16d common	16" o.c. face nail
		16d box	12" o.c. face nail
		3"x0.131" nails 3" 14 gage staples, 7/16" crown	12" o.c. face nail
10.	Built-up header	16d common	16" o.c. each edge, face nail
		16d box	12" o.c. each edge, face nail
11.	Continuous header to stud	4-8d common 4-10d box	Toenail
12.	Top plate to top plate	16d common	16" o.c. face nail
		10d box 3"x0.131" nails 3" 14 gage staples, 7/16" crown	12" o.c. face nail

NAILING SCHEDULE (CONT'D)

	ELEMENT/CONNECTION	FASTENER	LOCATION
13.	Top plate to top plate, at end joints	8-16d common 12-10d box 12-3"x0.131" nails 12-3" 14 gage staples, 7/16" crown	Each side of end joint, face nail (min 24" lap splice length each side of end joint)
14.	Bottom plate to joist, rim joist, band joist or blocking (not at braced wall panels)	16d common	16" o.c. face nail
		16d box 3"x0.131" nails 3" 14 gage staples, 7/16" crown	12" o.c. face nail
15.	Bottom plate to joist, rim joist, band joist or blocking **at braced wall panels**	2-16d common 3-16d box 4-3"x0.131" nails 4-3" 14 gage staples, 7/16" crown	16" o.c. face nail
16.	Stud to top or bottom plate	4-8d common 4-10d box 4-3"x0.131" nails 4-3" 14 gage staples, 7/16" crown	Toenail
		2-16d common 3-10d box 3-3"x0.131" nails 3-3" 14 gage staples, 7/16" crown	End nail
17.	Top or bottom plate to stud	2-16d common 3-10d box 3-3"x0.131" nails 3-3" 14 gage staples, 7/16" crown	End nail
18.	Top plates, laps at corners and intersections	2-16d common 3-10d box 3- 3"x0.131" nails 3-3" 14 gage staples, 7/16" crown	Face nail
19.	1" brace to each stud and plate	2-8d common 2-10d box 2- 3"x0.131" nails 2- 3" 14 gage staples, 7/16" crown	Face nail
20.	1"x6" sheathing to each bearing	2-8d common 2-10d box	Face nail
21.	1"8" and wider sheathing to each bearing	3-8d common 3-10d box	Face nail
	FLOOR		
22.	Joist to sill, top plate, or girder	3-8d common 3-10d box 3-3"x0.131" nails 3-3" 14 gage staples, 7/16" crown	Toenail
23.	Rim joist, band joist, or blocking to top plate, sill or other framing below	8d common 10d box 3"x0.131" nails 3" 14 gage staples, 7/16" crown	6" o.c., toenail
24.	1"x6" subfloor or less to each joist	2-8d common 2-10d box	Face nail
25.	2" subfloor to joist or girder	2-16d common	Face nail
26.	2" plank	2-16d common	Each bearing, face nail
27.	Built up girders and beams, 2" lumber layers	20d common	32" o.c. face nail at top and bottom staggered on opposite sides
		10d box 3"x0.131" nails 3" 14 gage staples, 7/16" crown	24" o.c. face nail at top and bottom staggered on opposite sides
		And 2-20d common 3-10dbox 3- 3"x0.131" nails 3- 3" 14 gage staples, 7/16" crown	Ends and at each splice, face nail
28.	Ledger strip supporting joists or rafters	3-16d common 4-10d box 4-3"x0.131" nails 4-3" 14 gage staples, 7/16" crown	Each joist or rafter, face nail
29.	Joist to band joist or rim joist	3-16d common 4-10d box 4-3"x0.131" nails 4-3" 14 gage staples, 7/16" crown	End nail
30.	Bridging or blocking to joist, rafter or truss	2-8d common	Each end, toenail
		2-10d box 2-3"x0.131" nails 2-3" 14 gage staples, 7/16" crown	
	WOOD STRUCTURAL PANS, SUB FLOOR, ROOF AND INTERIOR WALL SHEATHING TO FRAMING AND PARTICLEBOARD WALL SHEATHING TO FRAMING (a)		
31.	3/8"-1/2"	6d common or deformed (2"x0.113") (subfloor and wall)	6" edge 12" intermediate supports
		8d box or deformed (roof)	
		2 3/8"x0.113" nail (subfloor and wall)	
		1 ¾" 16 gage staple, 7/16" crown	4" edge 8" intermediate supports
		2 3/8" x0.113" nail (roof)	
		1 ¾"16 gage staple, 7/16" crown (roof)	3" edge 6" intermediate supports
32.	19/32" –3/4"	8d common 6d deformed	6" edge 12" intermediate supports
		2 3/8"x0.113 nail 2" 16" gage staple, 7/16" crown	4" edge 8" intermediate supports
33.	7/8" – 1/4"	10d common 8d deformed	6" edge 12" intermediate supports
	OTHER EXTERIOR WALL SHEATHING		
34.	1/2" fiberboard sheathing(b)	1 ½" galvanized roof nail 1 ¼" 16 gage staple with 7/16" or 1" crown	3" edge 6" intermediate supports
35.	25/32" fiberboard sheathing (b)	1 ¾" galvanized roof nail 1 ½" 16 gage staple with 7/16" or 1" crown	3" edge 6" intermediate supports
	WOOD STRUCTURAL PANELS, COMBINATION SUBFLOOR UNDERLAYMENT TO FRAMING		
36.	¾" and less	8d common 6d deformed	6" edge 12" intermediate supports
37.	7/8"-1"	8d common 8d deformed	6" edge 12" intermediate supports
38.	1 1/8"-1 ¼"	10d common 8d deformed	6" edge 12" intermediate supports
	PANEL SIDING TO FRAMING		
39.	½" or less	6d corrosion-resistant siding 6d corrosion-resistant casing	6" edge 12" intermediate supports
40.	5/8"	8d corrosion-resistant siding 8d corrosion-resistant casing	6" edge 12" intermediate supports
	INTERIOR PANELING		
41.	¼"	4d casing 4d finish	6" edge 12" intermediate supports
42.	3/8"	6d casing 6d finish	6" edge 12" intermediate supports

For SI: 1 inch = 25.4 mm.
a. Nails spaced at 6 inches at intermediate supports where spans are 48" or more. For nailing of wood structural panel and particleboard diaphragms and shear walls, refer to Section 2305. Nails for wall sheathing are permitted to be common, box or casing.
b. Spacing shall be 6 inches on center on the edges and 12 inches on center at intermediate supports for nonstructural applications. Panel supports at 16 inches (20 inches if strength axis in the long direction of the panel, unless otherwise marked).

CONCRETE NOTES

1. ALL CONCRETE SHALL HAVE 2500 psi MINIMUM COMPRESSIVE STRENGTH AT 28 DAYS. ALL GRADE BEAMS SHALL HAVE 3000 psi MINIMUM COMPRESSIVE STRENGTH AT 28 DAYS. ALL PILES SHALL HAVE 4000 psi MINIMUM COMPRESSIVE STRENGTH AT 28 DAYS. CONCRETE SHALL BE MECHANICALLY VIBRATED DURING PLACEMENT. DEPUTY INSPECTION REQUIRED FOR ALL CONCRETE GREATER THAN 3000 psi.
2. THE MINIMUM CEMENT CONTENT SHALL BE 6 SACKS MINIMUM PER CUBIC YARD.
3. THE MAXIMUM CONCRETE SLUMP SHALL BE 4 INCHES, PLUS OR MINUS 1 INCH.
4. CEMENT FOR CONCRETE SHALL BE STANDARD BRAND TYPE II, LOW ALKALI, PER ASTM C-150.
5. AGGREGATE SHALL CONFORM TO ASTM C-33, 1 INCH MAXIMUM SIZE, SIZE NUMBER 67 AGGREGATE. A MINIMUM 3"DIA. HOSE FOR PLACING CONCRETE IS REQUIRED. PEA GRAVEL MIXES ARE NOT ALLOWED.
6. WATER REDUCING AGENTS SHALL BE USED TO REDUCE WATER/CEMENT RATIO.
7. FASTENERS FOR PRESERVATIVE TREATED AND FIRE-RETARDANT-TREATED WOOD SHALL BE OF HOT DIPPED ZINC-COATED GALVANIZED STEEL, STAINLESS STEEL, SILICON BRONZE OR COPPER. THE COATING WEIGHTS FOR ZINC-COATED FASTENERS SHALL BE IN ACCORDANCE WITH ASTM A153. FASTENERS OTHER THAN NAILS, TIMBER RIVETS, WOOD SCREWS, AND LAG SCREWS SHALL BE PERMITTED TO BE OF MECHANICALLY DEPOSITED ZINC-COATED STEEL WITH COATING WEIGHTS IN ACCORDANCE WITH ASTM B695, CLASS 55 MIN.
8. ALL EPOXY USED SHALL BE SIMPSON SET-XP EPOXY LARR #25744. DEPUTY INSP REQ'D
9. ALL HOLDOWN ANCHORS AT SHEARWALLS SHALL BE HELD FIRMLY IN PLACE BY A TEMPLATE PRIOR TO FOUNDATION INSPECTION AND POURING CONCRETE. EXACT HOLDOWN LOCATION MUST BE COORDINATED BETWEEN CONCRETE CONTRACTOR AND FRAMING CONTRACTOR.
10. SOIL COMPACTION REPORT SHALL BE PROVIDED TO THE BUILDING INSPECTOR AT THE JOBSITE PRIOR TO PLACEMENT OF CONCRETE FOR THE FOUNDATION.
12. THE CONTRACTOR AND SUB-CONTRACTOR SHALL VERIFY ALL CONDITIONS SHOWN ON PLANS AT THE SITE PRIOR TO COMMENCING WORK.
13. THE REINFORCING STEEL SHALL BE INTERMEDIATE GRADE, DEFORMED BARS CONFORMING TO A.S.T.M. A-615 GRADE 60. THE PLACING OF REINFORCING STEEL SHALL BE IN ACCORDANCE WITH CHAPTER 19 OF THE 2019 CBC.
14. CRACK CONTROL JOINTS, ONE-QUARTER OF THE SLAB DEPTH, TO BE SAWCUT 10' TO 15' O.C. EACH WAY WITHIN 24 HOURS OF POUR.
15. STEEL PLATE WASHERS SHALL BE A MINIMUM OF 3"X3"X.229" AND SHALL BE PLACED BETWEEN THE FOUNDATION SILL PLATE AND THE NUT
16. HOLD-DOWN ANCHORS MUST BE RE-TIGHTENED JUST PRIOR TO COVERING THE WALL FRAMING
17. A CORROSION-RESISTANT WEEP SCREED IS REQUIRED BELOW STUCCO A MINIMUM OF 4"/2" ABOVE GRADE/SLAB.
18. PROVIDE 5/8" DIAMETER X 10" MINIMUM ANCHOR BOLTS WITH 7" EMBEDMENT SPACED NOT MORE THAN 4 FT. APART AND NOT MORE THAN 12" OR LESS THAN 4" FROM EACH END PIECE
19. MINIMUM CONCRETE STEMWALL THICKNESS IS 7.5"
20. ALL HDU HOLD-DOWNS TO HAVE SDS2.5 SCREWS PER MANUFACTURER'S CATALOG.

THESE DRAWINGS AND SPECIFICATIONS ARE THE PROPERTY AND COPYRIGHT OF LAUTERBACH & ASSOCIATES, ALL RIGHTS RESERVED, AND SHALL NOT BE USED ON ANY OTHER WORK OR PROJECT EXCEPT BY WRITTEN AGREEMENT WITH LAUTERBACH & ASSOCIATES. WRITTEN DIMENSIONS SHALL TAKE PRECEDENCE OVER SCALED DIMENSIONS AND SHALL BE VERIFIED ON THE JOB SITE, ANY DISCREPANCY SHALL BE BROUGHT TO THE NOTICE OF LAUTERBACH & ASSOCIATES PRIOR TO COMMENCEMENT OF ANY WORK.

LAUTERBACH & ASSOCIATES
A R C H I T E C T S • I N C.
David C. Kesterson, Architect • Ilona Scott, Architect • Mark S. Pettit, Architect
300 MONTGOMERY AVENUE, OXNARD, CALIFORNIA 93036 | 805-988-0912 | FAX 805-981-4510 | www.la-arch.com

REGISTERED PROFESSIONAL ENGINEER — SHANE DENNIS JUDD — No. M34632 — MECHANICAL — STATE OF CALIFORNIA

REGISTERED PROFESSIONAL ENGINEER — SHANE DENNIS JUDD — No. C70891 — CIVIL — STATE OF CALIFORNIA

FASHION PARK APARTMENTS
234, 251 & 257 FASHION PARK
OXNARD, CA, 93036

CITY OF OXNARD HOUSING AUTHORITY
435 S. D STREET
OXNARD, CALIFORNIA 93030

NO	DESCRIPTION	DATE
1	SUBMIT	4/8/2020

ISSUE

JOB NO. 20-190209

DRAWN BY:
CHECKED BY:
PROJECT MANAGER:
PRINT DATE: 2/15/19 8:36:51 AM

GENERAL NOTES

S-1.0

STRUCTURAL GENERAL NOTES (CONTINUED)

2019 CRC DESIGN LOADS

1. (R301 CRC) FLOOR LIVE LOADS:
   UNIFORM FLOOR LOAD: 40 psf
   UNIFORM DECK LOAD: 60 psf
   CONCENTRATED LOAD: 300 lb
   NO LIVE LOAD REDUCTIONS TAKEN

2. (R301 CRC) CEILING LIVE LOADS:
   UNINHABITABLE ATTICS WITHOUT STORAGE: 10 psf
   UNINHABITABLE ATTICS WITH LIMITED STORAGE: 20 psf
   HABITABLE ATTICS: 30 psf

3. (R301 CRC) ROOF LIVE LOAD: 20 psf
   NO LIVE LOAD REDUCTIONS TAKEN

4. (CBC 1609 & ASCE 7–10) WIND DESIGN DATA:
   ULTIMATE WIND SPEED (3–MILE GUST): 110
   NOMINAL WIND SPEED (3–MILE GUST): 38
   WIND EXPOSURE: C
   INTERNAL PRESSURE COEFFICIENT: 0.18

5. (CBC 1613 & ASCE 7–10) EARTHQUAKE DESIGN DATA:
   SEISMIC IMPORTANCE FACTOR I: 1.0
   RISK CATEGORY: II
   SPECTRAL RESPONSE ACCELERATIONS: Ss=1.947 S1=0.686
   SITE CLASS: D
   SPECTRAL RESPONSE COEFFICIENTS: Sds=1.298 Sd1=0.686
   SEISMIC DESIGN CATEGORY: D
   SEISMIC–FORCE RESISTING SYSTEM: WOOD SHEAR WALLS, ORDINARY REINFORCED CONCRETE S.W., CANTILEVER COLUMNS
   DESIGN BASE SHEAR: V=0.185W, V=0.301W, V=0.964W
   SEISMIC RESPONSE COEFFICIENT: Cs=0.200, Cs=0.325, Cs=1.038
   RESPONSE MODIFICATIONS FACTOR: R=6.5, R=4.0, R=1.25
   REDUNDANCY FACTOR: p=1.3 (12.3.4.2 ASCE)
   ANALYSIS PROCEDURE USED: EQUIVALENT LATERAL FORCE

CONTRACTOR RESPONSIBILITY

1. EACH CONTRACTOR RESPONSIBLE FOR THE CONSTRUCTION OF A MAIN WIND OR SEISMIC FORCE RESISTING SYSTEM, DESIGNATED SEISMIC SYSTEM OR A WIND OR SEISMIC RESISTING COMPONENT LISTED IN THE STATEMENT OF SPECIAL INSPECTIONS SHALL SUBMIT A WRITTEN STATEMENT OF RESPONSIBILITY TO THE BUILDING OFFICIAL AND THE OWNER PRIOR TO THE COMMENCEMENT OF WORK ON THE SYSTEM OR COMPONENT. THE CONTRACTOR'S STATEMENT OF RESPONSIBILITY SHALL CONTAIN THE FOLLOWING:
   (1) ACKNOWLEDGEMENT OF AWARENESS OF THE SPECIAL REQUIREMENTS CONTAINED IN THE STATEMENT OF SPECIAL INSPECTIONS
   (2) ACKNOWLEDGEMENT THAT CONTROL WILL BE EXERCISED TO OBTAIN CONFORMANCE WITH THE CONSTRUCTION DOCUMENTS APPROVED BY THE BUILDING OFFICIAL
   (3) PROCEDURES FOR EXERCISING CONTROL WITHIN THE CONTRACTOR'S ORGANIZATION, THE METHOD OF FREQUENCY OF REPORTING AND THE DISTRIBUTION OF THE REPORTS
   (4) IDENTIFICATION AND QUALIFICATION OF THE PERSON(S) EXERCISING SUCH CONTROL AND THEIR POSITION(S) IN THE ORGANIZATION

2. BY BEGINNING CONSTRUCTION ON THIS BUILDING, THE CONTRACTOR AGREES HE HAS THOROUGHLY REVIEWED THESE PLANS AND BELIEVES HE CAN BUILD THIS STRUCTURE AS THE PLANS ARE DRAWN AND DETAILED

ABBREVIATIONS

ABBR.	CORRECT SPELLING
A.B.	ANCHOR BOLT
B., BOT.	BOTTOM
B.O.B.	BOTTOM OF BEAM
B.N.	BOUNDARY NAILING
BLK'G	BLOCKING
C.J.	CEILING JOIST
CMU	CONCRETE MASONRY UNIT
CONC.	CONCRETE
CONT.	CONTINUOUS
D.	DEEP
D.F.	DOUGLAS FIR
DBL.	DOUBLE
DIA.	DIAMETER
EA.	EACH
E.N.	EDGE NAILING
E.W.	EACH WAY
F.J.	FLOOR JOIST
FT.	FEET
GLB	GLU–LAM BEAM
HOR., HORIZ.	HORIZONTAL
IN.	INCH
K.P.	KING POST
LT. WT.	LIGHT WEIGHT
M.B.	MACHINE BOLT
M.L.	MICROLLAM
MAX.	MAXIMUM
MIN.	MINIMUM
O.C.	ON CENTER
O/	OVER
P.C.	PIPE COLUMN
P.L.	PARALLAM
P.T.	POST–TENSION
PSR	PLYWOOD SPAN RATING
R.R.	ROOF RAFTER
SD.	SIDE
S.N.	SILL NAILING
SEL. STR.	SELECT STRUCTURAL
SIM.	SIMILAR
STAG.	STAGGERED
STD.	STANDARD
STL.	STEEL
T.	TOP
THK.	THICK
TJI	TRUS JOIST OR EQUIVALENT
TPL.	TRIPLE
TRIM	TRIMMER
TYP.	TYPICAL
U.N.O.	UNLESS NOTED OTHERWISE
U.W.A.	UNDER WALL ABOVE
VERT.	VERTICAL
W.	WIDE
W/	WITH

STRUCTURAL OBSERVATIONS

1. THE OWNER SHALL EMPLOY THE ENGINEER REGISTERED IN THE STATE OF CALIFORNIA WHO IS RESPONSIBLE FOR THE STRUCTURAL DESIGN TO DO STRUCTURAL OBSERVATION. 72 HOURS NOTICE IS REQUIRED FOR MEETINGS AND OBSERVATIONS.

2. NAME AND NUMBER OF ENGINEER RESPONSIBLE FOR THE STRUCTURAL DESIGN: SHANE JUDD #C70991

3. NAME AND NUMBER OF THE ENGINEERS THAT MAY BE DESIGNATED TO DO THE STRUCTURAL OBSERVATION:
   SHANE JUDD #C70991

4. THE ENGINEER RESPONSIBLE FOR THE STRUCTURAL OBSERVATION, THE CONTRACTOR, AND APPROPRIATE SUBCONTRACTORS SHALL HOLD A PRE–CONSTRUCTION MEETING TO REVIEW THE DETAILS OF THE STRUCTURAL SYSTEM TO BE STRUCTURALLY OBSERVED.

5. AT THE CONCLUSION OF THE WORK INCLUDED IN THE PERMIT, THE STRUCTURAL OBSERVER SHALL SUBMIT TO THE BUILDING OFFICIAL A WRITTEN STATEMENT THAT THE SITE VISITS HAVE BEEN MADE AND IDENTIFY ANY REPORTED DEFICIENCIES THAT, TO THE BEST OF THE STRUCTURAL OBSERVER'S KNOWLEDGE, HAVE NOT BEEN RESOLVED.

6. THE FOLLOWING ITEMS ARE TO BE OBSERVED BY THE ENGINEER DURING STRUCTURAL OBSERVATION:

   FOUNDATION:
   a) FOOTING REINFORCEMENT PLACEMENT
   b) SLAB REINFORCEMENT LAYOUT AND SPACING
   c) SHRINKAGE REINFORCEMENT

   ROOF NAILING:
   a) RAFTER AND PLYWOOD INSTALLATION
   b) ROOF DIAPHRAGM NAILING
   c) SHEAR TRANSFER FROM ROOF TO WALLS
   d) FRAMING SUPPORTING ROOF

   EXTERIOR FRAMING PRIOR TO PREWRAP:
   a) UPPER FLOOR SHEAR WALL NAILING AND HOLDOWNS
   b) LOWER FLOOR SHEAR WALL NAILING, AND HOLDOWNS AND ANCHOR BOLTS
   c) FLOOR TO FLOOR SHEAR TRANSFER

   SEISMIC/WIND FORCE RESISTING SYSTEM:
   WOOD:
   a) DIAPHRAGMS AND SHEAR WALLS WHERE THE NAILING IS 4"O.C. OR LESS
   b) DRAG CONNECTIONS, DIAPHRAGM CHORDS
   c) BEAMS & PLATES SUPPORTING HOLD–DOWNS & UPLIFT CONNECTORS

   FINAL OBSERVATION:
   a) FLOOR DRAG NAILING
   b) ALL STRUCTURAL DETAILS

7. ENGINEER OF RECORD OR THE DESIGNATED ENGINEER SHALL SUBMIT REPORTS ON THE PRESCRIBED FORM BY THE COUNTY

CONCRETE MASONRY NOTES

MATERIALS:
1. CONCRETE BLOCKS: CONFORMS TO ASTM C90.44 NORMAL WEIGHT
2. REINFORCEMENT: CONFORMS TO ASTM A615, MINIMUM 60 GRADE
3. CONCRETE: MIN. COMPRESSIVE STRENGTH SHALL BE 2500 PSI AT 28 DAYS FOR FOOTINGS AND 3000 PSI AT 28 DAYS FOR STEM WALLS

GENERAL SPECIFICATIONS:
1. CONTRACTOR SHALL VERIFY ALL DIMENSIONS AND CONDITIONS ON THE JOB. THE CONTRACTOR SHALL BE RESPONSIBLE FOR THE TEMPORARY SUPPORT OF ANY VERTICAL EARTH CUTS OVER 4'–0" IN HEIGHT.
2. ALL CELLS BELOW BACKFILL AND ALL OTHER CELLS WHICH CONTAIN REINFORCEMENT TO BE FILLED WITH GROUT AND CONSOLIDATED. U.N.O.
3. MORTAR SHALL BE TYPE S CONSISTING OF PORTLAND CEMENT, HYDRATED LIME, SAND AND POTABLE WATER WITH NO SUBSTITUTIONS. 2000 PSI MIN. SEE BELOW FOR MIN. MIX
4. REINFORCEMENT TO BE SPLICED 48 DIAMETERS MIN AND NO LESS THAN 24".
5. REINFORCEMENT SHALL BE ACCURATELY PLACED AND SECURED SO THAT IT WILL NOT BE DISPLACED. ALL CONCRETE SHALL BE PROPERLY CONSOLIDATED DURING PLACEMENT. ALL REINFORCING STEEL AND EMBEDDED ITEMS SHALL BE SECURELY TIED IN PLACE TO PREVENT DISPLACEMENT DURING GROUT PLACEMENT.
6. GROUT SHALL BE CONSOLIDATED TO INSURE A GOOD CONTACT WITH REINFORCEMENT AND TO ELIMINATE ROCK POCKETS AND VOIDS. THE CONTRACTOR SHALL TAKE ADEQUATE PRECAUTIONS FOR MIXING, PLACING, FINISHING, CURING AND PROTECTING CONCRETE DURING UNFAVORABLE WEATHER CONDITIONS.
7. POURING LIFTS SHALL BE 6'–0" MAX WITH CLEANOUTS PROVIDED FOR POURS OVER 5'–0".
8. POUR ALL FOOTINGS AGAINST SOLID NATURAL UNDISTURBED EARTH OR COMPACTED FILL COMPACTED TO 90% RELATIVE DENSITY.
9. USE 4" DIAMETER PERFORATED PVC DRAIN. PVC PIPE MUST DRAIN TO DOWN SLOPE AND BE NO LONGER THAN 40' WITHOUT SPECIAL DESIGN.
10. BACKFILL WITH 6" WIDTH OF SAND OR CLEAN COARSE GRAVEL AND COVER WITH A 12" THICK COMPACTED FILL BLANKET AT THE SURFACE. BACKFILL SHALL NOT BE PLACED UNTIL 14 DAYS AFTER GROUTING.
11. ALL WALLS SHALL BE WATERPROOFED ON THE SOIL SIDE BELOW FINISH GR.
12. CONCRETE BLOCK UNITS TO BE STAGGERED (RUNNING BOND).
13. CONCRETE BLOCK UNITS TO BE STANDARD 8"X8"X16" UNITS CONFORMING TO ASTM C90, GRADE N, TYPE II MIN. AND UBC STANDARD 21–4 UNO.
14. ALL FOOTINGS TO BE 12" MIN. INTO NATURAL GROUND.
15. IF 2500 PSI CONCRETE MIX IS SITE MIXED, USE 1 PART PORTLAND CEMENT, 2 PARTS SAND, 3 PARTS 1" ROCK W/A MAXIMUM OF 7 GALLONS OF WATER PER SACK OF CEMENT.
16. GROUT MIX FOR CONCRETE BLOCK WALL TO BE 2000 PSI, 1 PART PORTLAND CEMENT TO 3 PARTS SAND TO WHICH MAY BE ADDED NOT MORE THAN 1/10 PART LIME. SUFFICIENT WATER TO BE ADDED TO PRODUCE CONSISTENCY FOR POURING WITHOUT SEGREGATION OF THE CONSTITUENTS. GROUT MAY CONTAIN PEA GRAVEL TO A MAX. SIZE OF 3/8".
17. MORTAR MIX FOR CONCRETE BLOCKS TO BE 1 PART CEMENT TO 1/4 HYDRATED LIME TO 3 1/2 PARTS DAMP LOOSE SAND.

SPECIAL INSPECTIONS

1. THE OWNER OR REGISTERED DESIGN PROFESSIONAL IN RESPONSIBLE CHARGE ACTING AS THE OWNERS AGENT SHALL EMPLOY ONE OR MORE SPECIAL INSPECTORS DURING CONSTRUCTION ON THE TYPES OF WORK LISTED UNDER SECTION 1705 OF THE 2019 CBC. THE SPECIAL INSPECTOR SHALL BE A QUALIFIED PERSON WHO SHALL DEMONSTRATE COMPETENCE, TO THE SATISFACTION OF THE BUILDING OFFICIAL, FOR INSPECTION OF THE PARTICULAR TYPE OF CONSTRUCTION OR OPERATION REQUIRING SPECIAL INSPECTION.

2. SPECIAL INSPECTORS SHALL KEEP RECORDS OF INSPECTIONS. THE SPECIAL INSPECTOR SHALL FURNISH INSPECTION REPORTS TO THE BUILDING OFFICIAL, AND TO THE REGISTERED DESIGN PROFESSIONAL IN RESPONSIBLE CHARGE. REPORTS SHALL INDICATE THAT THE WORK INSPECTED WAS DONE IN CONFORMANCE TO APPROVED CONSTRUCTION DOCUMENTS. DISCREPANCIES SHALL BE BROUGH TO THE IMMEDIATE ATTENTION OF THE CONTRACTOR FOR CORRECTION. IF THE DISCREPANCIES ARE NOT CORRECTED, THE DISCREPANCIES SHALL BE BROUGHT TO THE ATTENTION OF THE BUILDING OFFICIAL AND TO THE REGISTERED DESIGN PROFESSIONAL IN RESPONSIBLE CHARGE PRIOR TO THE COMPLETION OF THAT PHASE OF WORK. A FINAL REPORT DOCUMENTING REQUIRED SPECIAL INSPECTION AND CORRECTION OF ANY DISCREPANCIES NOTED IN THE INSPECTIONS SHALL BE SUBMITTED AT A POINT IN TIME AGREED UPON BY THE PERMIT APPLICANT AND THE BUILDING OFFICIAL PRIOR TO START OF WORK.

3. THE FOLLOWING ITEMS REQUIRE SPECIAL INSPECTION:

   THE WIND AND SEISMIC FORCE RESISTING SYSTEMS ARE TO BE INSPECTED/OBSERVED BY THE ENGINEER OF RECORD (SEE STRUCT OBSERVATIONS)

   STEEL CONSTRUCTION AND FIELD WELDING (SEE TABLE 1705.21 & 1705.12.1)
   PIER FOUNDATIONS (SEE TABLE 1705.8)
   PILE FOUNDATIONS (SEE TABLE 1705.8)
   EPOXY USED FOR ANCHOR BOLTS, HOLDOWNS, AND STRUCTURAL RETROFITS
   CONCRETE CONSTRUCTION (SEE TABLE 1705.3)
   SOILS (SEE TABLE 1705.4)
   ANCHORAGE OF ELECTRICAL EQUIPMENT IN SDC E AND F
   MASONRY CONSTRUCTION (SEE TABLE 1705.4)
   CONCRETE WHERE Fc' EXCEEDS 2500 psi
   POST–INTALLED ANCHORS (SEE TABLE 1705.1.1)
   DIAPHRAGMS AND SHEAR WALLS WHERE THE NAILING IS 4"O.C. OR LESS
   EXTERIOR WALL PANELS AND THEIR ANCHORAGE
   SUSPENDED CEILINGS AND THEIR ANCHORAGE
   ACCESS FLOORS AND THEIR ANCHORAGE
   STEEL STORAGE RACKS 8 ft OR GREATER AND THEIR ANCHORAGE

   SPECIAL CASES (WHEN ORDERED BY THE BUILDING OFFICIALS)

4. SEE THE ADJACENT STATEMENTS OF SPECIAL INSPECTIONS FOR SPECIFIC REQUIREMENTS OF EACH TYPE OF SPECIAL INSPECTION

STATEMENT OF SPECIAL INSPECTIONS

TABLE 1705.3
REQUIRED VERIFICATION AND INSPECTION OF CONCRETE CONSTRUCTION

VERIFICATION AND INSPECTION	CONTINUOUS	PERIODIC	REFERENCED STANDARDa	IBC REFERENCE
1. Inspection of reinforcing steel, including prestressing tendons, and placement.	—	X	ACI 318: 3.5, 7.1-7.7	1910.4
2. Inspection of reinforcing steel welding in accordance with Table 1705.2.2, Item 2b.	—	—	AWS D1.4 ACI 318: 3.5.2	—
3. Inspection of anchors cast in concrete where allowable loads have been increased or where strength design is used.	—	X	ACI 318: D.9.2	1908.5
4. Inspection of anchors post-installed in hardened concrete membersb a. Adhesive anchors installed in horizontally or upwardly inclined orientations to resist sustained tension loads.	X		ACI 318:D.9.2.4	—
b. Mechanical anchors and adhesive anchors not defined in 4.a.		X	ACI 318: D.9.2	—
5. Verifying use of required design mix.	—	X	ACI 318: Ch. 4, 5.2-5.4	1904.2, 1910.2, 1910.3
6. At the time fresh concrete is sampled to fabricate specimens for strength tests, perform slump and air content tests, and determine the temperature of the concrete.	X		ASTM C 172 ASTM C 31 ACI 318: 5.6, 5.8	1910.10
7. Inspection of concrete and shotcrete placement for proper application techniques.	X	—	ACI 318: 5.9, 5.10	1910.6, 1910.7, 1910.8
8. Inspection for maintenance of specified curing temperature and techniques.	—	X	ACI 318: 5.11-5.13	1910.9
9. Inspection of prestressed concrete: a. Application of prestressing forces. b. Grouting of bonded prestressing tendons in the seismic force-resisting system.	X X	—	ACI 318: 18.20 ACI 318: 18.18.4	—
10. Erection of precast concrete members.	—	X	ACI 318: Ch. 16	—
11. Verification of in-situ concrete strength, prior to stressing of tendons in post-tensioned concrete and prior to removal of shores and forms from beams and structural slabs.	—	X	ACI 318: 6.2	—
12. Inspect formwork for shape, location and dimensions of the concrete member being formed.	—	X	ACI 318: 6.1.1	—

For SI: 1 inch = 25.4 mm.
a. Where applicable, see also Section 1705.11, Special inspections for seismic resistance.
b. Specific requirements for special inspection shall be included in the research report for the anchor issued by an approved source in accordance with ACI 355.2, D.9.2 in ACI 318, or other qualification procedures. Where specific requirements are not provided, special inspection requirements shall be specified by the registered design professional and shall be approved by the building official prior to the commencement of the work.

TABLE 1705.2.2
REQUIRED VERIFICATION AND INSPECTION OF STEEL CONSTRUCTION OTHER THAN STRUCTURAL STEEL

VERIFICATION AND INSPECTION	CONTINUOUS	PERIODIC	REFERENCED STANDARDa
1. Material verification of cold-formed steel deck:			
a. Identification markings to conform to ASTM standards specified in the approved construction documents.	—	X	Applicable ASTM material standards
b. Manufacturer's certified test reports.	—	X	
2. Inspection of welding:			
a. Cold-formed steel deck:			
1) Floor and roof deck welds.	—	X	AWS D1.3
b. Reinforcing steel:			
1)Verification of weldability of reinforcing steel other than ASTM A 706.	—		AWS D1.4 ACI 318: Section 3.5.2
2) Reinforcing steel resisting flexural and axial forces in intermediate and special moment frames, and boundary elements of special structural walls of concrete and shear reinforcement.	X	—	
3) Shear reinforcement.	X	—	
4) Other reinforcing steel.	—		

For SI: 1 inch = 25.4 mm.

STATEMENT OF SPECIAL INSPECTIONS (CONTINUED)

Table 8-a Location and Frequencies of bolting inspections

Inspection Tasks Prior to Bolting	QC Task	QC Doc.	QA Task	QA Doc.
Proper bolt selected for the joint detail	O	-	O	-
Proper bolting procedure selected for joint detail	O	-	O	-
Connecting elements are fabricated properly, including the appropriate faying surface condition and hole preparation, if specified, meets appliable requirements	O	-	O	-
Pre-installation verification testing conducted for fastener assemblies and method used.	P	D	O	D
Proper storage provided for bolts, nuts, washers, and other fastener components.	O	-	O	-
Inspection Tasks During Bolting	**QC Task**	**QC Doc.**	**QA Task**	**QA Doc.**
Fastener assemblies placed in all holes and washers (if required) are properly positioned	O	-	O	-
Joint bought to a snug tight condition prior to pretensioning operation	O	-	O	-
Fastener component not turned by the wrench prevented from rotating	O	-	O	-
Bolts are pretensioned progressing systematically from most rigid point toward free edges	O	-	O	-
Inspection Tasks After Bolting	**QC Task**	**QC Doc.**	**QA Task**	**QA Doc.**
Document accepted and rejected connections	P	D	P	D

Table 8-b Location and Frequencies of welding inspections

Visual Inspection Tasks Before Welding	QC Task	QC Doc.	QA Task	QA Doc.
Material Identification (Type/Grade)	O	-	O	-
Welder identification system	O	-	O	-
Fit-up of Grove Welds (including joint geometry) - Joint preparation - Dimensions (alignment, root opening, root face, bevel) - Cleanliness (condition of steel surface) - Tacking (tack weld quality and location) - Backing type and fit (if applicable)	P/O**	-	O	-
Configuration and finish of access holes	O	-	O	-
Fit-up of fillet welds - Dimensions (alignment, gaps at root) - Cleanliness (condition of steel surfaces) - Tacking (tack weld quality and location)	P/O**		O	

** Following performance of this inspection task for ten welds to be made by a given welder, with the welder demonstrating adequate understanding of the requirements and possession of skills and tools to verify these items, the Perform designation of this task shall be reduced to Oberve, and the welder shall perform this task. Should the inspector determine that the welder has discontinued adequate performance of this task, the task shall be returned Perform until such time as the inspector has reestablished adequate assurance that the welder will perform the inspection tasks listed.

Visual Inspection Tasks During Welding	QC Task	QC Doc.	QA Task	QA Doc.
WPS followed - Settings on welding equipment - Travel Speed - Selected welding materials - Shielding gas type/flow rate - Preheat applied - Interpass temperature manitained (min./max.) - Proper position (F,V,H,OH) - Intermix of filler metals avoided unless approved	O	-	O	-
Use of qualified welders	O	-	O	-
Control and handling of welding consumables - Packaging - Exposure control	O	-	O	-
Envirnoment conditions - Wind speed within limits - Precipitation and temperature	O	-	O	-
Welding techniques - Interpass and final cleaning - Each pass within profile limitations - Each pass meets quality requirements	O		O	
No welding over cracked tacks	O	-	O	-
Visual Inspection Tasks After Welding	**QC Task**	**QC Doc.**	**QA Task**	**QA Doc.**
Welds cleaned	O	-	O	-
Verify size, length, and location of welds	P	-	P	-
Visually inspect welds to acceptance criteria - Crack prohibition - Weld/base-metal fusion - Crater cross-section - Weld profiles - Weld size - Undercut - Porosity	P	D	P	D
Placement of reinforcing or contouring fillet welds (if required)	P	D	P	D
Backing removed, weld tabs removed and finished, and fillet welds added (if required)	P	D	P	D
Repair activities	P	-	P	D

Table 8-c Location and Frequencies of other inspections

Other Inspection Task	QC Task	QC Doc.	QA Task	QA Doc.
Reduced beam section (RBS) requirements, if appliable - contour and finish - dimensional tolerances	P	D	P	D
Protected zone - no holes and unapproved attachments made by fabricator or erector, as applicable	P	D	P	D

The following entries are used in the tables:
- Observe (O) - The inspector shall observe these functions on a random, daily basis. Welding operations need not be delayed pending observations.
- Perform (P) - These inspections shall be performed prior to the final acceptance of the item. Where a task is noted to be performed by both OC and OA, it shall be permitted to coordinate the inspection function between QC and QA so that the inspection functions need be performed by only one party. Where QA is to rely upon inspection functions performed by QC, the approval of the engineer of record and the authority having jurisdiction is required.
- Document (D) - The inspector shall prepare reports indicating that the work has been performed in accordance with the contract documents. The report need not provide detailed measurements for joint fit-up, WPS settings, completed welds, or other individual items listed in the Tables of 8-a, 8-b, 8-c. For shop fabrication, the report shall indicate the piece mark of the piece inspected. For field work, the report shall indicate the reference gride lines and floor or elevation inspected. Work not in compliance with the contract documents and wether the noncompliance has been satisfactorilly repaired shall be noted in the inspection report.

TABLE 1705.6
REQUIRED VERIFICATION AND INSPECTION OF SOILS

VERIFICATION AND INSPECTION	CONT.	PER.
1. Verify materials below shallow foundations are adequate to achieve the design bearing capacity.		X
2. Verify excavations are extended to proper depth and have reached proper material.		X
3. Perform classification and testing of compacted fill materials.		X
4. Verify use of proper materials, densities and lift thicknesses during placement and compaction of controlled fill.	X	
5. Prior to placement of controlled fill, inspect subgrade and verify that site has been prepared properly.		X

STRUCTURAL TESTING FOR SEISMIC RESISTANCE

1. (1708.4 CBC) BASE METAL THICKER THAN 1.5 INCHES, WHERE SUBJECT TO THROUGH–THICKNESS WELD SHRINKAGE STRAINS, SHALL BE ULTRASONICALLY TESTED FOR DISCONTINUITIES BEHIND AND ADJACENT TO SUCH WELDS AFTER JOINT COMPLETION

STEEL NOTES

1. THE LABOR, MATERIALS & EXECUTION REQUIRED FOR ALL STEEL WORK AS INDICATED ON DRAWINGS SHALL BE IN ACCORDANCE WITH THOSE APPLICABLE SECTIONS OF CHAPTER 22 OF THE 2019 C.B.C.
2. STRUCTURAL STEEL & MISCELLANEOUS STEEL SHALL CONFORM TO A.S.T.M. A–36. PIPE COLUMNS SHALL CONFORM TO A.S.T.M. A–53 GRADE "B". BOLTS SHALL CONFORM TO A.S.T.M. SPECIFICATION A–307 FOR WOOD & A–325x FOR CONCRETE AND STEEL.
3. ALL WELDS SHALL BE DONE IN AN APPROVED SHOP IN ACCORDANCE WITH AWS D1.1–94. ALL FIELD WELDING SHALL BE PERFORMED BY A CERTIFIED WELDER & BE CONTINUOUSLY INSPECTED BY AN APPROVED DEPUTY INSPECTOR.
4. WELDING SHALL BE DONE BY ELECTRIC SHIELDED ARC PROCESS USING E–70XX ELECTRODES.
5. STRUCTURAL STEEL NOT ENCASED IN CONCRETE SHALL BE PAINTED WITH ONE COAT OF RED OXIDE PRIMER.
6. Wx SECTIONS OF STRUCTURAL STEEL FOR MOMENT FRAMES SHALL CONFORM WITH ASTM A–992.

STRUCTURAL OBSERVATION PROGRAM
AND DESIGNATION OF THE
STRUCTURAL OBSERVER

PROJECT ADDRESS: 2228 CAREFUL AVE. AGOURA HILLS PERMIT APPL. NO.:
Description of Work: RESIDENCE
Owner: MR.GENCHI & MS.ARMIJO Architect: CLEARLIGHT ARCH. Engineer: SHANE JUDD

STRUCTURAL OBSERVATION
(only checked items are required)
Firm or Individual to be responsible for the Structural Observation:
Name: ALL–TRADE Phone: 805–552–4000 Calif. Registration: C70991

FOUNDATION	WALL	FRAME	DIAPHRAGM
☐ Footing, Stem Walls, Piers	☐ Concrete	☐ Steel Moment Frame	☐ Concrete
☐ Mat Foundation	☐ Masonry	☐ Steel Braced Frame	☐ Masonry
☐ Caisson, Piles, Grade Beams	☐ Wood	☐ Concrete Moment Frame	☐ Wood
☐ Stepping/Retaining Foundation, Hillside Special Anchors	☐ Others:	☐ Masonry Wall Frame	☐ Others:
☐ Concrete Slab		☐ Others: CANT. COL.	

DECLARATION BY OWNER
I, the Owner of the project, declare that the above listed form or individual is hired BY ME to be the Structural Observer.

Signature Date

DECLARATION BY ARCHITECT OR ENGINEER OF RECORD (required if the Structural Observer is different from the Architect or Engineer of Record)

I, the Architect or Engineer of record for the project, declare that the above listed firm or individual is designated by me to be responsible for the Structural Observation.

Signature C70991 4/7/2020
License No. Date

SI/Form.08 (Part 2) (Rev. 6/1/2005) www.ladbs.org

LAUTERBACH & ASSOCIATES
A R C H I T E C T S • I N C.
David C. Kesterson, Architect • Ilona Scott, Architect • Mark S. Pettit, Architect
300 MONTGOMERY AVENUE, OXNARD, CALIFORNIA 93036 | 805-988-0912 | FAX 805-981-4510 | www.la-arch.com

REGISTERED PROFESSIONAL ENGINEER SHANE DENNIS JUDD No. M34632 MECHANICAL STATE OF CALIFORNIA

REGISTERED PROFESSIONAL ENGINEER SHANE DENNIS JUDD No. C70991 CIVIL STATE OF CALIFORNIA

FASHION PARK APARTMENTS
234, 251 & 257 FASHION PARK
OXNARD, CA, 93036

CITY OF OXNARD HOUSING AUTHORITY
435 S. D STREET
OXNARD, CALIFORNIA 93030

NO	DESCRIPTION	DATE
1	SUBMIT	4/8/2020

ISSUE

JOB NO. 20-190209

DRAWN BY:
CHECKED BY:
PROJECT MANAGER:
PRINT DATE: 2/15/19 8:36:51 AM

GENERAL NOTES (CONT'D)

S-1.1

THESE DRAWINGS AND SPECIFICATIONS ARE THE PROPERTY AND COPYRIGHT OF LAUTERBACH & ASSOCIATES, ALL RIGHTS RESERVED, AND SHALL NOT BE USED ON ANY OTHER WORK OR PROJECT EXCEPT BY WRITTEN AGREEMENT WITH LAUTERBACH & ASSOCIATES. WRITTEN DIMENSIONS SHALL TAKE PRECEDENCE OVER SCALED DIMENSIONS AND SHALL BE VERIFIED ON THE JOB SITE, ANY DISCREPANCY SHALL BE BROUGHT TO THE NOTICE OF LAUTERBACH & ASSOCIATES PRIOR TO COMMENCEMENT OF ANY WORK.

12"W X 12"D TIE FOOTING W/ (2)-#4 BARS T&B

(E) 12" X 24" FOOTING TO REMAIN V.I.F.

(N) 12" X 24" FOOTING W/ (2)-#4 BARS T&B

4X6 POST UNO
6X6 POST UNO
POST ABOVE
BEAM # IN CALCULATIONS
BEARING WALLS
NON-BEARING WALLS
BEARING WALLS ABOVE

8 S-3.0 CALIFORNIA FRAMING

1. FOR TYPICAL CUTTING, NOTCHING, AND BORING SEE 1/S-3.0
2. FOR TYPICAL OPENING IN SHEAR PANELS SEE 9/S-3.0
3. FOR TYPICAL HOLD-DOWN STRAP AT UPPER FLOOR SEE 7/S-3.0
4. FOR TYPICAL TOP PLATE SPLICE SEE 2 THRU 6/S-3.0,
5. PROVIDE DBL 2x TRIMMER AT EACH END OF EACH HDR/BEAM UNO
6. SHEATHE ENTIRE EXTERIOR WITH 'B' SHEAR WALL MIN. UNO
7. ALL EXT. BEARING WALLS 2X6 @ 16" O.C. & INT. BEARING WALLS 2X6 @ 16" O.C. UNO
8. PROVIDE MIN. 1/4" GAP BETWEEN TOP PL AND BEAMS @ ALL NON-BEARING WALLS U.N.O
9. ALL STRAPS (MST W/ (2)-2X MIN., MSTI W/ TJI, ETC) BY SIMPSON STRONG-TIE MEET LARR #25713 AND ICC ESR #2105
10. ALL ANGLES (A35, LTP4, ETC) BY SIMPSON STRONG-TIE MEET LARR #25716 AND ICC ESR #3096
11. ALIGN RR OR FJ WITH DRAG STRAPS WHERE SPECIFIED. PROVIDE EDGE NAILING ALONG ENTIRE RR OR FJ
12. ALL 'Q' FASTENERS IMPLY SDS2.5 SCREWS TO BE USED
14. EPOXY USING SIMPSON SET-XP (ICC ESR #2508 AND LARR#25744)
15. A COPY OF THE LOS ANGELES REPORT AND/OR CONDITIONS OF LISTING SHALL BE MADE AVAILABLE AT THE JOB SITE

Diaphragm and Shear Wall Notes

1. Roof diaphragm nailing to be inspected before covering. Face grain of plywood shall be perpendicular to supports. Floor shall have tongue and groove or blocked panel edges. Plywood spans shall conform with Table 2304.8(1)
2. All diaphragm and shear wall nailing shall utilize common nails or galvanized box.

SHEAR WALL SCHEDULE [6]

(DOUBLE LETTER INDICATES TWO SIDED APPLICATION W/ 3/4" dia. A.B. @ 12" O.C. & A35 OR LTP4 @ 6" O.C.)

MARK	W.S.P [3]	EDGE NAILING [4]	ANCHOR BOLTS [5]	SILL NAILING @ UPPER FLOORS	ALLOWABLE SHEAR (plf) [6]	A35 OR LTP4 SPACING (MIN.)
A	15/32"	8d @ 6" o.c.	5/8" dia. @ 32" o.c.	16d @ 6" o.c.	200	32" O.C.
B	15/32"	10d @ 6" o.c.	5/8" dia. @ 24" o.c.	16d @ 4" o.c.	255	24" O.C.
C [1]	15/32"	10d @ 4" o.c.	5/8" dia. @ 16" o.c.	SDS 1/4"x6"@6"o.c. [2]	383	16" O.C.
D [1]	15/32"	10d @ 3" o.c.	5/8" dia. @ 16" o.c.	SDS 1/4"x6"@6"o.c. [2]	499	12" O.C.
E [1]	15/32"	10d @ 2" o.c.	5/8" dia. @ 16" o.c.	SDS 1/4"x6"@4"o.c. [2]	653	8" O.C.
#	EXISTING SHEAR WALL SHEATHING, NAILING AND HOLD DOWNS TO REMAIN U.N.O.					

1. 3x boundary & edge studs required. 3x pressure treated sill plate required against concrete. (For walls CC, DD, & EE, 3x sill plate required at upper floors.)
2. Simpson SDS 1/4"X6" screws staggered into 4x minimum.
3. Wood Structural Panel applied over studs spaced at 16" o.c. Use 5-ply STRUCT I plywood, PS1-09 or STRUCT I OSB, PS2-10.
4. Nailing at intermediate members to be spaced @ 12" O.C. Only common nails shall be used. (10d-0.148" dia., 8d-0.131" dia.) Nail guns using "clipped head" or "sinker" nails are not acceptable. Stagger nailing in top plates, boundary members, and edge members. Edge distance for nailing at 3x boundary and panel edges shall be 1/2" minimum.
5. Use 12" min. long anchor bolts extending 4-1/2" out of concrete min.
6. Based on 2016 chapter 23 of the CBC (reduced 25%)

HOLDOWN NOTES

1. All bolt holes shall be 1/8" (maximum) over-size at the connection of holdowns to posts. Inspectors to verify.
2. Holdown connection bolts/nuts shall be torqued 1/2 turn beyond finger tight or as required by manufacturer. Inspector shall verify by random inspection prior to covering walls.
3. Approved plate washers in lieu of cut washers to be used for plywood shear wall sill plate anchor bolts and for holdown connector bolts at shear walls.

MINIMUM SIZE FOR SQUARE PLATE WASHERS

BOLT SIZE	PLATE SIZE
5/8"	3"X3"X.229"
3/4"	3"X3"X.229"

FOUNDATION PAD SCHEDULE

PAD	SIZE	THK.	REBAR
A	2'-6"x2'-6"	x12"	4-#4 E.W.
B	3'-6"x3'-6"	x15"	4-#5 E.W.
C	4'-6"x4'-6"	x18"	6-#5 E.W.
D	5'-6"x5'-6"	x21"	6-#6 E.W.

(E) F.J. TO REMAIN U.N.O.

2X8 R.R. @ 16" O.C. U.N.O.

2X6 C.J. @ 16" O.C. U.N.O.

FLOOR SHEATHING

23/32" T&G STURD-1-FLOOR @ TILE PSR. 48/24

Nailing:

BOUNDARY	10 d @ 6 in. o.c.
EDGE	10 d @ 6 in. o.c.
FIELD	10 d @ 12 in. o.c.

1-1/8" T&G STURD-1-FLOOR U.N.O. PSR. 60/48

Nailing:

BOUNDARY	12 d @ 6 in. o.c.
EDGE	12 d @ 6 in. o.c.
FIELD	12 d @ 12 in. o.c.

ROOF SHEATHING

19/32" CDX PLYWOOD OR OSB PSR. 40/20

Nailing:

BOUNDARY	10 d @ 6 in. o.c.
EDGE	10 d @ 6 in. o.c.
FIELD	10 d @ 12 in. o.c.

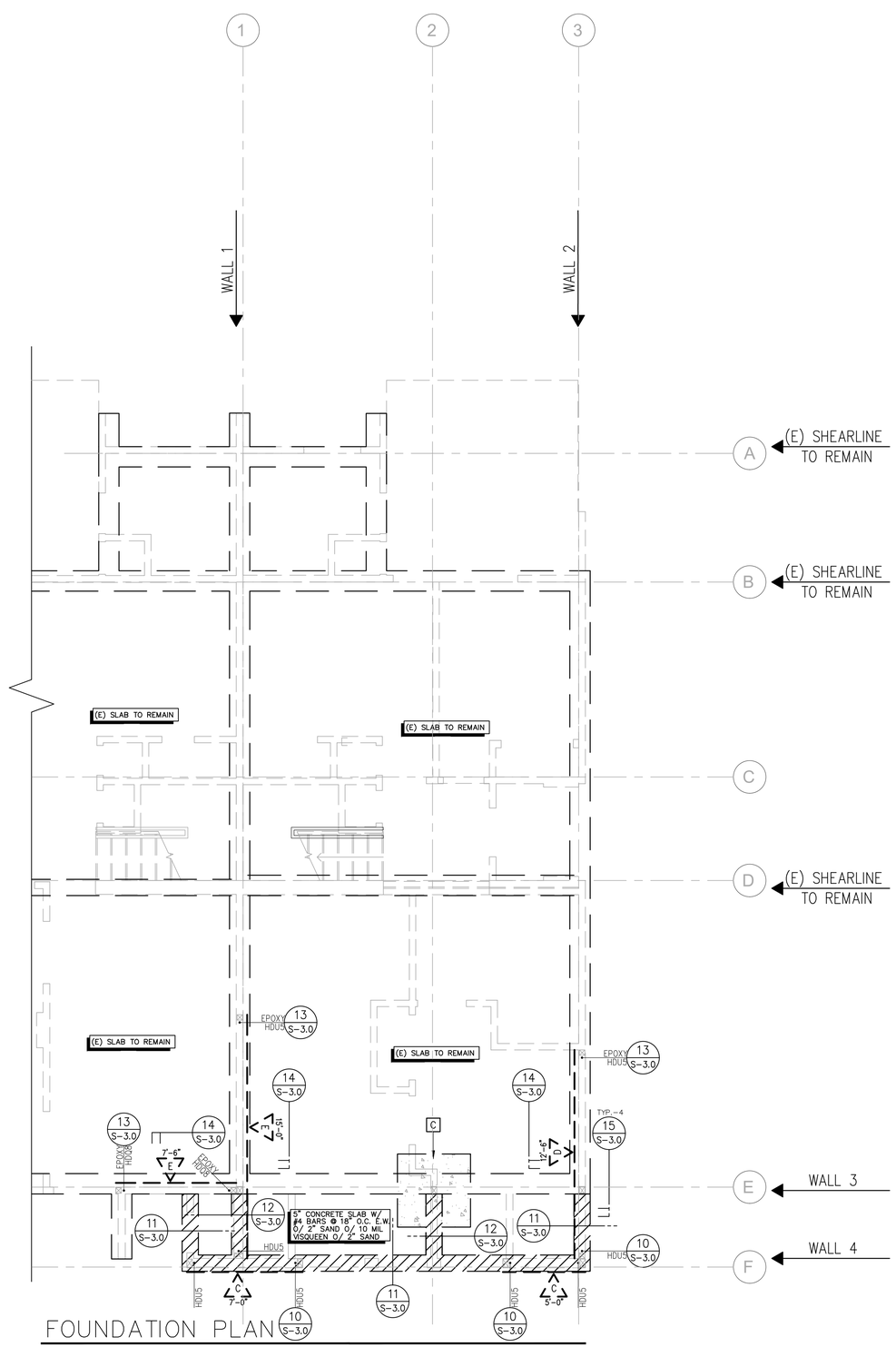

FOUNDATION PLAN

SCALE: 1/4"=1'-0"

LAUTERBACH & ASSOCIATES
ARCHITECTS INC.
David C. Kesterson, Architect • Ilona Scott, Architect • Mark S. Pettit, Architect
300 MONTGOMERY AVENUE, OXNARD, CALIFORNIA 93036 | 805-988-0912 | FAX 805-981-4510 | www.la-arch.com

REGISTERED PROFESSIONAL ENGINEER SHANE DENNIS LUCKER No. M34632 MECHANICAL STATE OF CALIFORNIA

REGISTERED PROFESSIONAL ENGINEER SHANE DENNIS LUCKER No. C70591 CIVIL STATE OF CALIFORNIA

FASHION PARK APARTMENTS
234, 251 & 257 FASHION PARK
OXNARD, CA, 93036

CITY OF OXNARD HOUSING AUTHORITY
435 S. D STREET
OXNARD, CALIFORNIA 93030

NO	DESCRIPTION	DATE
1	SUBMIT	4/8/2020

ISSUE

JOB NO. 20-190209

DRAWN BY:
CHECKED BY:
PROJECT MANAGER:
PRINT DATE: 2/15/19 8:36:51 AM

FOUNDATION PLAN

S-2.0

THESE DRAWINGS AND SPECIFICATIONS ARE THE PROPERTY AND COPYRIGHT OF LAUTERBACH & ASSOCIATES. ALL RIGHTS RESERVED, AND SHALL NOT BE USED ON ANY OTHER WORK OR PROJECT EXCEPT BY WRITTEN AGREEMENT WITH LAUTERBACH & ASSOCIATES. WRITTEN DIMENSIONS SHALL TAKE PRECEDENCE OVER SCALED DIMENSIONS AND SHALL BE VERIFIED ON THE JOB SITE. ANY DISCREPANCY SHALL BE BROUGHT TO THE NOTICE OF LAUTERBACH & ASSOCIATES PRIOR TO COMMENCEMENT OF ANY WORK.

- 4X6 POST UNO
- 6X6 POST UNO
- POST ABOVE
- BEAM # IN CALCULATIONS
- BEARING WALLS
- NON-BEARING WALLS
- BEARING WALLS ABOVE

8 / S-3.0 CALIFORNIA FRAMING

1. FOR TYPICAL CUTTING, NOTCHING, AND BORING SEE 1/S-3.0
2. FOR TYPICAL OPENING IN SHEAR PANELS SEE 9/S-3.0
3. FOR TYPICAL HOLD-DOWN STRAP AT UPPER FLOOR SEE 7/S-3.0
4. FOR TYPICAL TOP PLATE SPLICE SEE 2 THRU 6/S-3.0,
5. PROVIDE DBL 2x TRIMMER AT EACH END OF EACH HDR/BEAM UNO
6. SHEATHE ENTIRE EXTERIOR WITH 'B' SHEAR WALL MIN. UNO
7. ALL EXT. BEARING WALLS 2X6 @ 16" O.C. & INT. BEARING WALLS 2X6 @ 16" O.C. UNO
8. PROVIDE MIN. 1/4" GAP BETWEEN TOP PL AND BEAMS @ ALL NON-BEARING WALLS U.N.O
9. ALL STRAPS (MST W/ (2)-2X MIN., MSTI W/ TJI, ETC) BY SIMPSON STRONG-TIE MEET LARR #25713 AND ICC ESR #2105
10. ALL ANGLES (A35, LTP4, ETC) BY SIMPSON STRONG-TIE MEET LARR #25716 AND ICC ESR #3096
11. ALIGN RR OR FJ WITH DRAG STRAPS WHERE SPECIFIED. PROVIDE EDGE NAILING ALONG ENTIRE RR OR FJ
12. ALL 'Q' FASTENERS IMPLY SDS2.5 SCREWS TO BE USED
14. EPOXY USING SIMPSON SET-XP (ICC ESR #2508 AND LARR#25744)
15. A COPY OF THE LOS ANGELES REPORT AND/OR CONDITIONS OF LISTING SHALL BE MADE AVAILABLE AT THE JOB SITE

Diaphragm and Shear Wall Notes

1. Roof diaphragm nailing to be inspected before covering. Face grain of plywood shall be perpendicular to supports. Floor shall have tongue and groove or blocked panel edges. Plywood spans shall conform with Table 2304.8(1)
2. All diaphragm and shear wall nailing shall utilize common nails or galvanized box.

SHEAR WALL SCHEDULE 6

(DOUBLE LETTER INDICATES TWO SIDED APPLICATION W/ 3/4" dia. A.B. @ 12" O.C. & A35 OR LTP4 @ 6" O.C.)

MARK	W.S.P 3	EDGE NAILING 4	ANCHOR BOLTS 5	SILL NAILING @ UPPER FLOORS	ALLOWABLE SHEAR (plf) 6	A35 OR LTP4 SPACING (MIN.)
A	15/32"	8d @ 6" o.c.	5/8" dia. @ 32" o.c.	16d @ 6" o.c.	200	32" O.C.
B	15/32"	10d @ 6" o.c.	5/8" dia. @ 24" o.c.	16d @ 4" o.c.	255	24" O.C.
C 1	15/32"	10d @ 4" o.c.	5/8" dia. @ 16" o.c.	SDS 1/4"x6"@6"o.c.2	383	16" O.C.
D 1	15/32"	10d @ 3" o.c.	5/8" dia. @ 16" o.c.	SDS 1/4"x6"@6"o.c.2	499	12" O.C.
E 1	15/32"	10d @ 2" o.c.	5/8" dia. @ 16" o.c.	SDS 1/4"x6"@4"o.c.2	653	8" O.C.
#	EXISTING SHEAR WALL SHEATHING, NAILING AND HOLD DOWNS TO REMAIN U.N.O.					

1. 3x boundary & edge studs required. 3x pressure treated sill plate required against concrete. (For walls CC, DD, & EE, 3x sill plate required at upper floors.)
2. Simpson SDS 1/4"X6" screws staggered into 4x minimum.
3. Wood Structural Panel applied over studs spaced at 16" o.c. Use 5-ply STRUCT I plywood, PS1-09 or STRUCT I OSB, PS2-10.
4. Nailing at intermediate members to be spaced @ 12" O.C. Only common nails shall be used. (10d-0.148" dia., 8d-0.131" dia.) Nail guns using "clipped head" or "sinker" nails are not acceptable. Stagger nailing in top plates, boundary members, and edge members. Edge distance for nailing at 3x boundary and panel edges shall be 1/2" minimum.
5. Use 12" min. long anchor bolts extending 4-1/2" out of concrete min.
6. Based on 2016 chapter 23 of the CBC (reduced 25%)

HOLDOWN NOTES

1. All bolt holes shall be 1/8" (maximum) over-size at the connection of holdowns to posts. Inspectors to verify.
2. Holdown connection bolts/nuts shall be torqued 1/2 turn beyond finger tight or as required by manufacturer. Inspector shall verify by random inspection prior to covering walls.
3. Approved plate washers in lieu of cut washers to be used for plywood shear wall sill plate anchor bolts and for holdown connector bolts at shear walls.

MINIMUM SIZE FOR SQUARE PLATE WASHERS

BOLT SIZE	PLATE SIZE
5/8"	3"X3"X.229"
3/4"	3"X3"X.229"

(E) F.J. TO REMAIN U.N.O.

2X8 R.R. @ 16" O.C. U.N.O.

2X6 C.J. @ 16" O.C. U.N.O.

FLOOR SHEATHING

23/32" T&G STURD-1-FLOOR @ TILE PSR. 48/24

Nailing:

BOUNDARY	10 d @ 6 in. o.c.
EDGE	10 d @ 6 in. o.c.
FIELD	10 d @ 12 in. o.c.

1-1/8" T&G STURD-1-FLOOR U.N.O. PSR. 60/48

Nailing:

BOUNDARY	12 d @ 6 in. o.c.
EDGE	12 d @ 6 in. o.c.
FIELD	12 d @ 12 in. o.c.

ROOF SHEATHING

19/32" CDX PLYWOOD OR OSB PSR. 40/20

Nailing:

BOUNDARY	10 d @ 6 in. o.c.
EDGE	10 d @ 6 in. o.c.
FIELD	10 d @ 12 in. o.c.

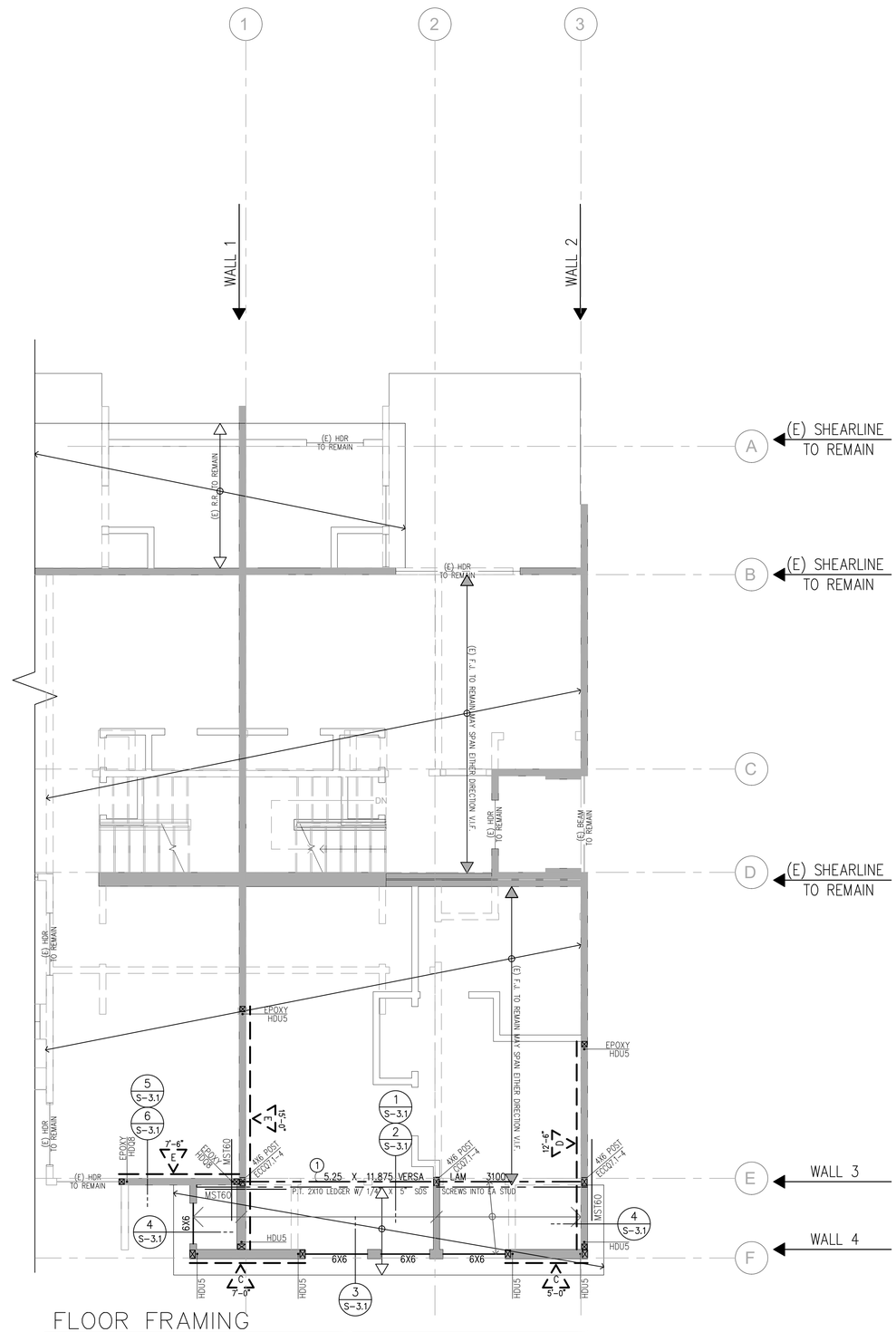

FLOOR FRAMING

SCALE: 1/4"=1'-0"

LAUTERBACH & ASSOCIATES
ARCHITECTS INC.
David C. Kesterson, Architect • Ilona Scott, Architect • Mark S. Pettit, Architect
300 MONTGOMERY AVENUE, OXNARD, CALIFORNIA 93036 | 805-988-0912 | FAX 805-981-4510 | www.la-arch.com

REGISTERED PROFESSIONAL ENGINEER SHANE DENNIS PETTIT No. M 34632 MECHANICAL STATE OF CALIFORNIA

REGISTERED PROFESSIONAL ENGINEER SHANE DENNIS PETTIT No. C 70891 CIVIL STATE OF CALIFORNIA

FASHION PARK APARTMENTS
234, 251 & 257 FASHION PARK
OXNARD, CA, 93036

CITY OF OXNARD HOUSING AUTHORITY
435 S. D STREET
OXNARD, CALIFORNIA 93030

NO	DESCRIPTION	DATE
1	SUBMIT	4/8/2020

ISSUE

JOB NO. 20-190209

DRAWN BY:
CHECKED BY:
PROJECT MANAGER:
PRINT DATE: 2/15/19 8:36:51 AM

FLOOR FRAMING PLAN

S-2.1

THESE DRAWINGS AND SPECIFICATIONS ARE THE PROPERTY AND COPYRIGHT OF LAUTERBACH & ASSOCIATES, ALL RIGHTS RESERVED, AND SHALL NOT BE USED ON ANY OTHER WORK OR PROJECT EXCEPT BY WRITTEN AGREEMENT WITH LAUTERBACH & ASSOCIATES. WRITTEN DIMENSIONS SHALL TAKE PRECEDENCE OVER SCALED DIMENSIONS AND SHALL BE VERIFIED ON THE JOB SITE. ANY DISCREPANCY SHALL BE BROUGHT TO THE NOTICE OF LAUTERBACH & ASSOCIATES PRIOR TO COMMENCEMENT OF ANY WORK.

4X6 POST UNO
6X6 POST UNO
POST ABOVE
BEAM # IN CALCULATIONS
BEARING WALLS
NON–BEARING WALLS
BEARING WALLS ABOVE

8 S–3.0
CALIFORNIA FRAMING

1. FOR TYPICAL CUTTING, NOTCHING, AND BORING SEE 1/S–3.0
2. FOR TYPICAL OPENING IN SHEAR PANELS SEE 9/S–3.0
3. FOR TYPICAL HOLD–DOWN STRAP AT UPPER FLOOR SEE 7/S–3.0
4. FOR TYPICAL TOP PLATE SPLICE SEE 2 THRU 6/S–3.0,
5. PROVIDE DBL 2x TRIMMER AT EACH END OF EACH HDR/BEAM UNO
6. SHEATHE ENTIRE EXTERIOR WITH 'B' SHEAR WALL MIN. UNO
7. ALL EXT. BEARING WALLS 2X6 @ 16" O.C. & INT. BEARING WALLS 2X6 @ 16" O.C. UNO
8. PROVIDE MIN. 1/4" GAP BETWEEN TOP PL AND BEAMS @ ALL NON–BEARING WALLS U.N.O
9. ALL STRAPS (MST W/ (2)–2X MIN., MSTI W/ TJI, ETC) BY SIMPSON STRONG–TIE MEET LARR #25713 AND ICC ESR #2105
10. ALL ANGLES (A35, LTP4, ETC) BY SIMPSON STRONG–TIE MEET LARR #25716 AND ICC ESR #3096
11. ALIGN RR OR FJ WITH DRAG STRAPS WHERE SPECIFIED. PROVIDE EDGE NAILING ALONG ENTIRE RR OR FJ
12. ALL 'Q' FASTENERS IMPLY SDS2.5 SCREWS TO BE USED
14. EPOXY USING SIMPSON SET–XP (ICC ESR #2508 AND LARR#25744)
15. A COPY OF THE LOS ANGELES REPORT AND/OR CONDITIONS OF LISTING SHALL BE MADE AVAILABLE AT THE JOB SITE

Diaphragm and Shear Wall Notes

1. Roof diaphragm nailing to be inspected before covering. Face grain of plywood shall be perpendicular to supports. Floor shall have tongue and groove or blocked panel edges. Plywood spans shall conform with Table 2304.8(1)
2. All diaphragm and shear wall nailing shall utilize common nails or galvanized box.

SHEAR WALL SCHEDULE [6]

(DOUBLE LETTER INDICATES TWO SIDED APPLICATION W/ 3/4" dia. A.B. @ 12" O.C. & A35 OR LTP4 @ 6" O.C.)

MARK	W.S.P [3]	EDGE NAILING [4]	ANCHOR BOLTS [5]	SILL NAILING @ UPPER FLOORS	ALLOWABLE SHEAR (plf) [6]	A35 OR LTP4 SPACING (MIN.)
A	15/32"	8d @ 6" o.c.	5/8" dia. @ 32" o.c.	16d @ 6" o.c.	200	32" O.C.
B	15/32"	10d @ 6" o.c.	5/8" dia. @ 24" o.c.	16d @ 4" o.c.	255	24" O.C.
C [1]	15/32"	10d @ 4" o.c.	5/8" dia. @ 16" o.c.	SDS 1/4"x6"@6"o.c. [2]	383	16" O.C.
D [1]	15/32"	10d @ 3" o.c.	5/8" dia. @ 16" o.c.	SDS 1/4"x6"@6"o.c. [2]	499	12" O.C.
E [1]	15/32"	10d @ 2" o.c.	5/8" dia. @ 16" o.c.	SDS 1/4"x6"@4"o.c. [2]	653	8" O.C.
#	EXISTING SHEAR WALL SHEATHING, NAILING AND HOLD DOWNS TO REMAIN U.N.O.					

1. 3x boundary & edge studs required. 3x pressure treated sill plate required against concrete. (For walls CC, DD, & EE, 3x sill plate required at upper floors.)
2. Simpson SDS 1/4"X6" screws staggered into 4x minimum.
3. Wood Structural Panel applied over studs spaced at 16" o.c. Use 5–ply STRUCT I plywood, PS1–09 or STRUCT I OSB, PS2–10.
4. Nailing at intermediate members to be spaced @ 12" O.C. Only common nails shall be used. (10d–0.148" dia., 8d–0.131" dia.) Nail guns using "clipped head" or "sinker" nails are not acceptable. Stagger nailing in top plates, boundary members, and edge members. Edge distance for nailing at 3x boundary and panel edges shall be 1/2" minimum.
5. Use 12" min. long anchor bolts extending 4–1/2" out of concrete min.
6. Based on 2016 chapter 23 of the CBC (reduced 25%)

HOLDOWN NOTES

1. All bolt holes shall be 1/8" (maximum) over–size at the connection of holdowns to posts. Inspectors to verify.
2. Holdown connection bolts/nuts shall be torqued 1/2 turn beyond finger tight or as required by manufacturer. Inspector shall verify by random inspection prior to covering walls.
3. Approved plate washers in lieu of cut washers to be used for plywood shear wall sill plate anchor bolts and for holdown connector bolts at shear walls.

MINIMUM SIZE FOR SQUARE PLATE WASHERS

BOLT SIZE	PLATE SIZE
5/8"	3"X3"X.229"
3/4"	3"X3"X.229"

(E) F.J. TO REMAIN U.N.O.
2X8 R.R. @ 16" O.C. U.N.O.
2X6 C.J. @ 16" O.C. U.N.O.

FLOOR SHEATHING
23/32" T&G STURD–1–FLOOR @ TILE PSR. 48/24
Nailing:
BOUNDARY 10 d @ 6 in. o.c.
EDGE 10 d @ 6 in. o.c.
FIELD 10 d @ 12 in. o.c.

1–1/8" T&G STURD–1–FLOOR U.N.O. PSR. 60/48
Nailing:
BOUNDARY 12 d @ 6 in. o.c.
EDGE 12 d @ 6 in. o.c.
FIELD 12 d @ 12 in. o.c.

ROOF SHEATHING
19/32" CDX PLYWOOD OR OSB PSR. 40/20
Nailing:
BOUNDARY 10 d @ 6 in. o.c.
EDGE 10 d @ 6 in. o.c.
FIELD 10 d @ 12 in. o.c.

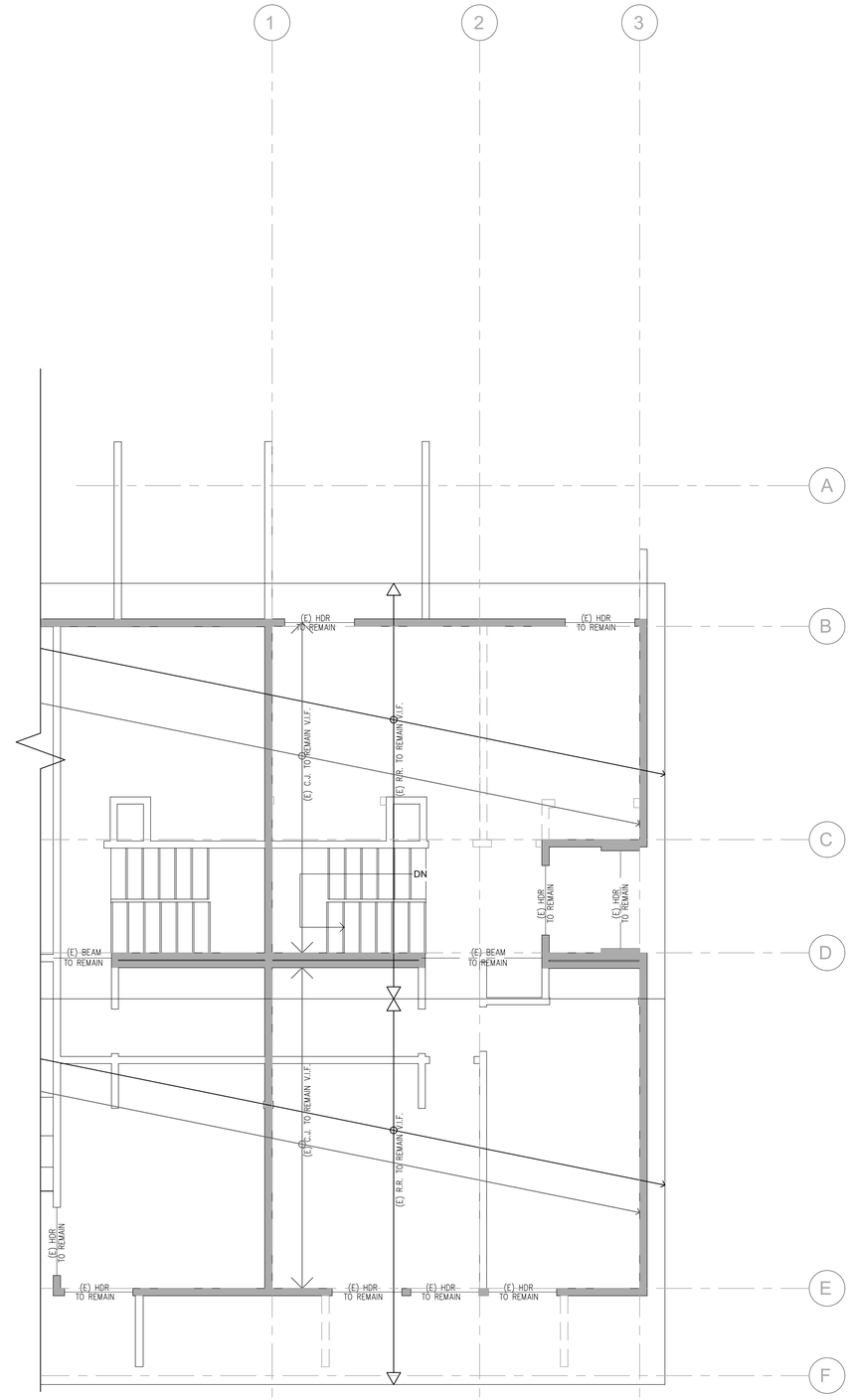

ROOF FRAMING PLAN

SCALE: 1/4"=1'–0"

LAUTERBACH & ASSOCIATES
ARCHITECTS INC.
David C. Kesterson, Architect • Ilona Scott, Architect • Mark S. Pettit, Architect
300 MONTGOMERY AVENUE, OXNARD, CALIFORNIA 93036 | 805-988-0912 | FAX 805-981-4510 | www.la-arch.com

REGISTERED PROFESSIONAL ENGINEER SHANE DENNIS SLATER No. M24632 STATE MECHANICAL OF CALIFORNIA

REGISTERED PROFESSIONAL ENGINEER SHANE DENNIS SLATER No. C70891 STATE CIVIL OF CALIFORNIA

FASHION PARK APARTMENTS
234, 251 & 257 FASHION PARK
OXNARD, CA, 93036

CITY OF OXNARD HOUSING AUTHORITY
435 S. D STREET
OXNARD, CALIFORNIA 93030

NO.	DESCRIPTION	DATE
1	SUBMIT	4/8/2020

ISSUE

JOB NO. 20-190209

DRAWN BY:
CHECKED BY:
PROJECT MANAGER:
PRINT DATE: 2/15/19 8:36:51 AM

ROOF FRAMING PLAN

S-2.2

THESE DRAWINGS AND SPECIFICATIONS ARE THE PROPERTY AND COPYRIGHT OF LAUTERBACH & ASSOCIATES. ALL RIGHTS RESERVED, AND SHALL NOT BE USED ON ANY OTHER WORK OR PROJECT EXCEPT BY WRITTEN AGREEMENT WITH LAUTERBACH & ASSOCIATES. WRITTEN DIMENSIONS SHALL TAKE PRECEDENCE OVER SCALED DIMENSIONS AND SHALL BE VERIFIED ON THE JOB SITE. ANY DISCREPANCY SHALL BE BROUGHT TO THE NOTICE OF LAUTERBACH & ASSOCIATES PRIOR TO COMMENCEMENT OF ANY WORK.

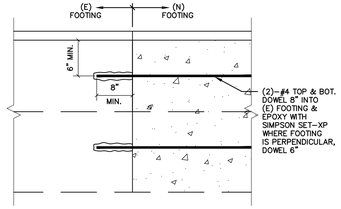

DEPUTY INSPECTION REQ'D FOR EPOXY WORK

15 SCALE: NTS

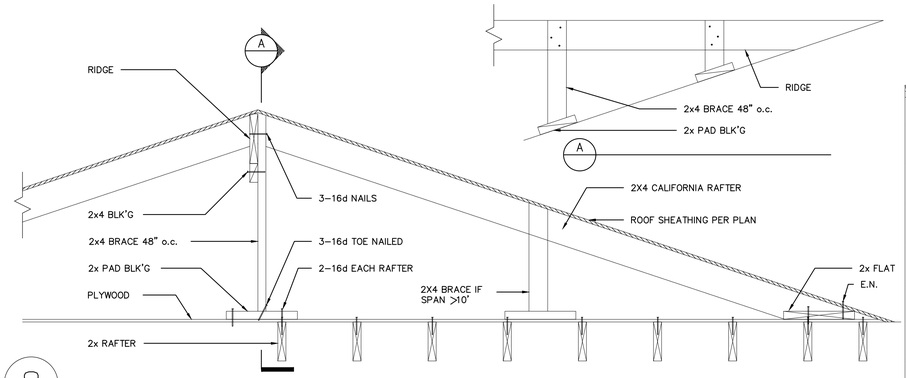

8 SCALE: NTS

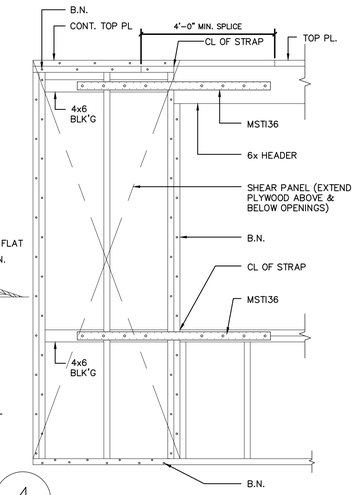

4 SCALE: NTS

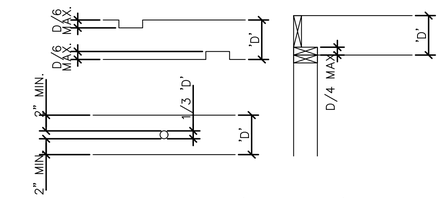

NOTCHING & BORING FLOOR JOISTS (CBC 2308.4.2.4)
(NOTCHING NOT PERMITTED IN MIDDLE 1/3 OF JOIST SPAN)

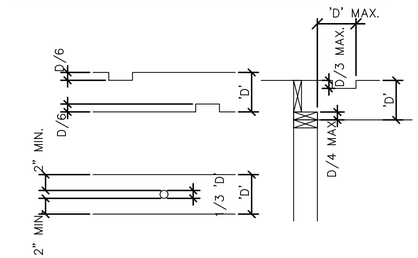

NOTCHING & BORING RAFTERS & CEILING JOISTS (CBC 2308.7.4)
(NOTCHING NOT PERMITTED IN MIDDLE 1/3 OF RAFTER OR JOIST SPAN)

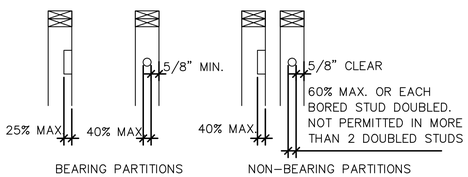

NOTCHING AND BORING WALL STUDS (CBC 2308.5.9/2308.5.10)

1 SCALE: NTS

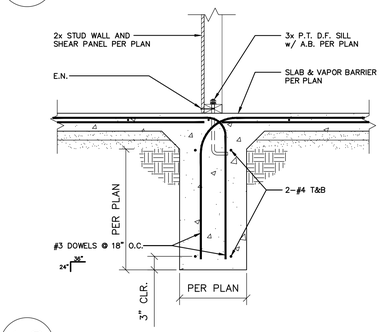

12 SCALE: NTS

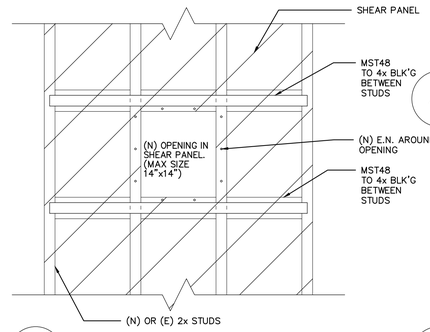

9 SCALE: NTS

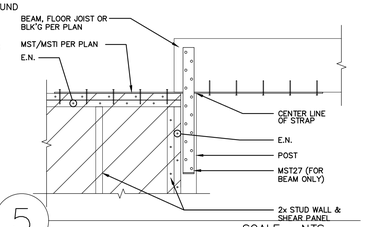

5 SCALE: NTS

NOTE: SLAB TO BE PACHOMETERED TO LOCATE EXISTING POST – TENSION CABLES PRIOR TO DRILLING. DRILL TO MAINTAIN 3" CLR. FROM ANY LOCATED CABLES.

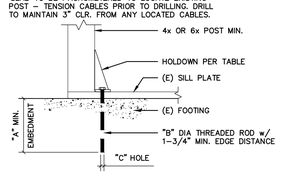

HOLDOWN	"A"	"B"	"C"	"D"
HDU2/ HDU5	12"	5/8"	3/4"	4685#
HDQ8	15"	7/8"	1"	8325#
HHDQ11	18"	1"	1–1/8"	11445#
HHDQ14	18"	1"	1–1/8"	14700#

USE "SIMPSON" SET–XP ADHESIVE SYSTEM w/ 2000 p.s.i. EXISTING CONCRETE. ALLOWABLE TENSILE LOADS = "D". (I.C.C. REPORT #2508)

DEPUTY INSPECTION REQ'D FOR ALL EPOXY WORK

13 SCALE: NTS

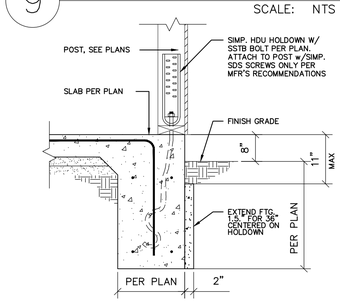

10 SCALE: NTS

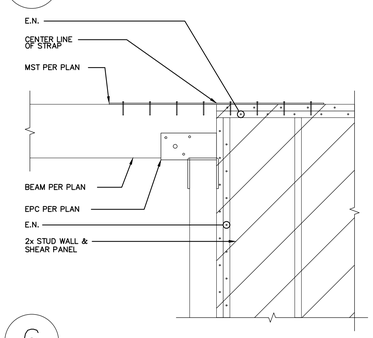

6 SCALE: NTS

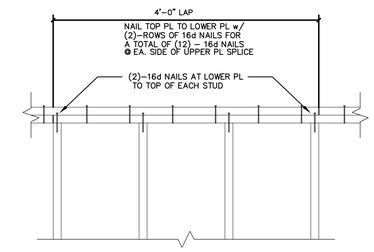

2 SCALE: NTS

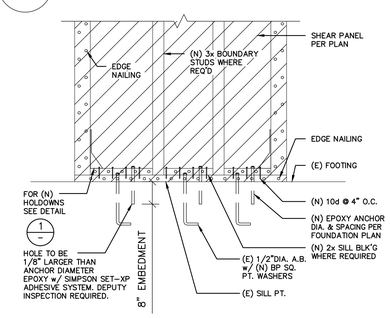

USE "SIMPSON" SET–XP ADHESIVE SYSTEM w/ 2000 p.s.i.
LARR #25744 (DEPUTY INSPECTION REQUIRED FOR EPOXY WORK)

14 SCALE: NTS

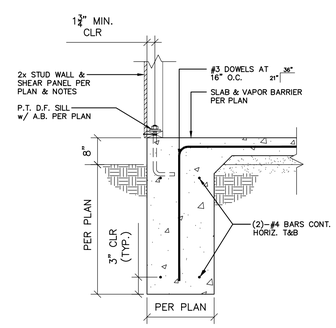

11 SCALE: NTS

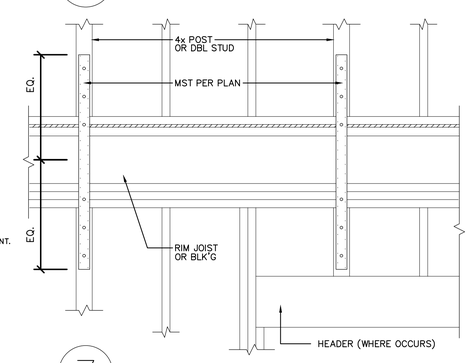

7 SCALE: NTS

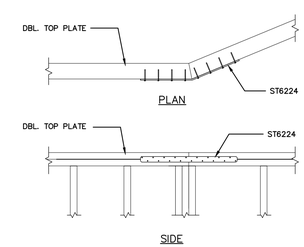

3 SCALE: NTS

THESE DRAWINGS AND SPECIFICATIONS ARE THE PROPERTY AND COPYRIGHT OF LAUTERBACH & ASSOCIATES. ALL RIGHTS RESERVED, AND SHALL NOT BE USED ON ANY OTHER WORK OR PROJECT EXCEPT BY WRITTEN AGREEMENT WITH LAUTERBACH & ASSOCIATES. WRITTEN DIMENSIONS SHALL TAKE PRECEDENCE OVER SCALED DIMENSIONS AND SHALL BE VERIFIED ON THE JOB SITE. ANY DISCREPANCY SHALL BE BROUGHT TO THE NOTICE OF LAUTERBACH & ASSOCIATES PRIOR TO COMMENCEMENT OF ANY WORK.

LAUTERBACH & ASSOCIATES
ARCHITECTS INC.
David C. Kesterson, Architect • Ilona Scott, Architect • Mark S. Pettit, Architect
300 MONTGOMERY AVENUE, OXNARD, CALIFORNIA 93036 | 805-988-0912 | FAX 805-981-4510 | www.la-arch.com

REGISTERED PROFESSIONAL ENGINEER SHANE DENNIS No. M34632 MECHANICAL STATE OF CALIFORNIA

REGISTERED PROFESSIONAL ENGINEER SHANE DENNIS No. C36991 CIVIL STATE OF CALIFORNIA

FASHION PARK APARTMENTS
234, 251 & 257 FASHION PARK
OXNARD, CA, 93036

CITY OF OXNARD HOUSING AUTHORITY
435 S. D STREET
OXNARD, CALIFORNIA 93030

NO	DESCRIPTION	DATE
1	SUBMIT	4/8/2020

ISSUE

JOB NO. 20-190209

DRAWN BY:
CHECKED BY:
PROJECT MANAGER:
PRINT DATE: 2/15/19 8:36:51 AM

STRUCTURAL DETAILS

S-3.0

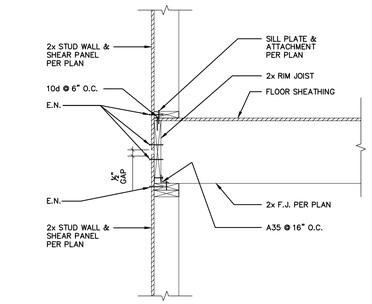

5 SCALE: NTS

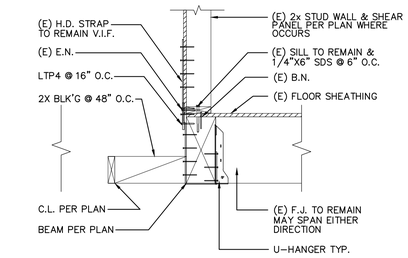

1 SCALE: NTS

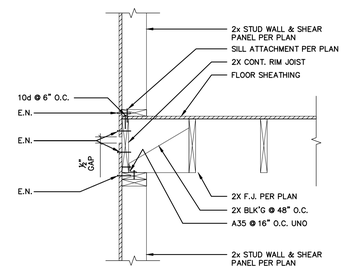

6 SCALE: NTS

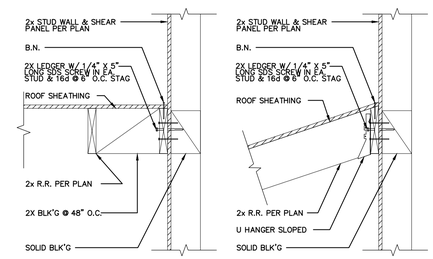

2 SCALE: NTS

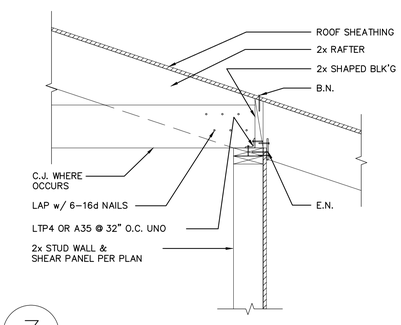

3 SCALE: NTS

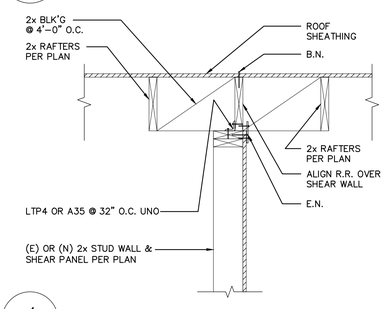

4 SCALE: NTS

13 SCALE: NTS

9 SCALE: NTS

14 SCALE: NTS

10 SCALE: NTS

15 SCALE: NTS

11 SCALE: NTS

16 SCALE: NTS

12 SCALE: NTS

7 SCALE: NTS

8 SCALE: NTS

THESE DRAWINGS AND SPECIFICATIONS ARE THE PROPERTY AND COPYRIGHT OF LAUTERBACH & ASSOCIATES. ALL RIGHTS RESERVED, AND SHALL NOT BE USED ON ANY OTHER WORK OR PROJECT EXCEPT BY WRITTEN AGREEMENT WITH LAUTERBACH & ASSOCIATES. WRITTEN DIMENSIONS SHALL TAKE PRECEDENCE OVER SCALED DIMENSIONS AND SHALL BE VERIFIED ON THE JOB SITE. ANY DISCREPANCY SHALL BE BROUGHT TO THE NOTICE OF LAUTERBACH & ASSOCIATES PRIOR TO COMMENCEMENT OF ANY WORK.

LAUTERBACH & ASSOCIATES
ARCHITECTS INC.
David C. Kesterson, Architect • Ilona Scott, Architect • Mark S. Pettit, Architect
300 MONTGOMERY AVENUE, OXNARD, CALIFORNIA 93036 | 805-988-0912 | FAX 805-981-4510 | www.la-arch.com

REGISTERED PROFESSIONAL ENGINEER SHANE DENNIS MECHANICAL No. M34632 STATE OF CALIFORNIA

REGISTERED PROFESSIONAL ENGINEER SHANE DENNIS CIVIL No. C70891 STATE OF CALIFORNIA

FASHION PARK APARTMENTS
234, 251 & 257 FASHION PARK
OXNARD, CA, 93036

CITY OF OXNARD HOUSING AUTHORITY
435 S. D STREET
OXNARD, CALIFORNIA 93030

NO	DESCRIPTION	DATE
1	SUBMIT	4/8/2020

ISSUE

JOB NO. 20-190209

DRAWN BY:
CHECKED BY:
PROJECT MANAGER:
PRINT DATE: 2/15/19 8:36:51 AM

STRUCTURAL DETAILS (CONT'D)

S-3.1

KEYNOTES - EXISTING TO REMAIN

E.03	EXISTING ROOF OVERHANG
E.04	EXISTING TREE TO REMAIN, TYPICAL
E.06	EXISTING STREET LIGHT
E.09	EXISTING TRASH ENCLOSURE
E.12	EXISTING LANDSCAPE AREA
E.13	EXISTING FIRE HYDRANT AND 150' RADIUS
E.17	EXISTING CURB RAMP
E.26	EXISTING MONUMENT SIGN
E.27	EXISTING CLUSTER MAIL BOX
E.30	EXISTING CARPORT WITH 3" METAL POST 9'- 0" O.C.
E.31	EXISTING CARPORT WITH CMU WALLS
E.32	EXISTING "NO PARKING SIGN"
E.41	EXISTING BOLLARD

KEYNOTES

01.13	ADDITION TO (1) ONE-BEDROOM UNIT
02.01	PARKING SPACE: STANDARD
02.02	ACCESS COMPLIANT PARKING (VAN)
02.08	TRUNCATED DOMES (SEE DETAIL 6/A-501)
03.01	CONCRETE SIDEWALK
03.04	CONCRETE STOOP, 2% SLOPE MAXIMUM IN ALL DIRECTIONS

SYMBOL LEGEND

- PATH OF TRAVEL
- NEW ADDITION AREA
- UNIT TO BE MODIFIED

GENERAL NOTES

1. EXISTING CONCRETE SLAB AT CARPORT TO BE REPAIRED AS REQUIRED TO PROVIDE ADEQUATE SURFACE FOR ACCESSIBLE PARKING AND LOADING AREAS.
2. ACCESSIBLE SPACE AND LOADING AREA TO BE STRIPED AND PAINTED AS REQUIRED (DETAIL 4/A-501)
3. MODIFICATIONS TO EXISTING BACKFLOW PREVENTER TO BE DESIGN-BUILD BY CONTRACTOR, INCLUDING NEW OR RELOCATION OF BFP, DETERMINATION OF NEW LOCATION, AND CONNECTIONS TO EXISTING SYSTEM.

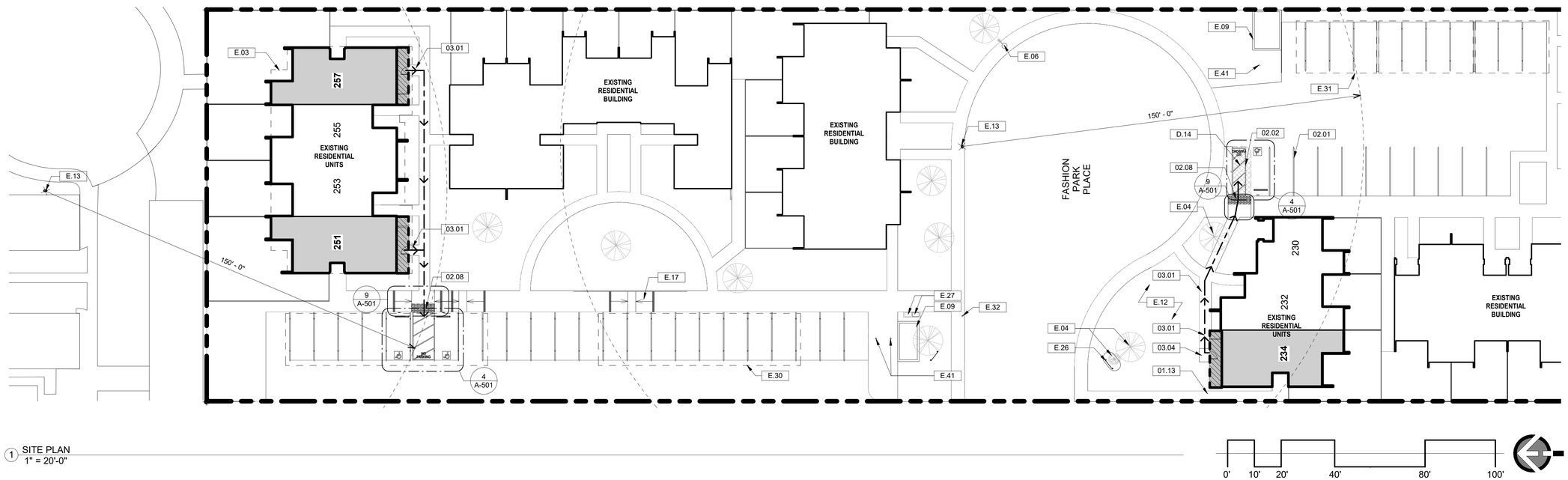

1 SITE PLAN
1" = 20'-0"

0' 10' 20' 40' 80' 100'

LAUTERBACH & ASSOCIATES
ARCHITECTS INC.
David C. Kesterson, Architect • Ilona Scott, Architect • Mark S. Pettit, Architect
300 MONTGOMERY AVENUE, OXNARD, CALIFORNIA 93036 | 805-988-0912 | FAX 805-981-4510 | www.la-arch.com

LICENSED ARCHITECT ILONA SCOTT No. C11881 Ren. 06/21 STATE OF CALIFORNIA

FASHION PARK APARTMENTS

234, 251 & 257 FASHION PARK
OXNARD, CA, 93036

CITY OF OXNARD HOUSING AUTHORITY

435 S. D STREET
OXNARD, CALIFORNIA 93030

NO	DESCRIPTION	DATE
1	PI ch submittal	04/08/2020

ISSUE

JOB NO.	20-190709
DRAWN BY:	TJL
CHECKED BY:	ISS
PROJECT MANAGER:	ISS
PRINT DATE:	4/8/2020 3:05:30 AM

SITE PLAN

A0-001

THESE DRAWINGS AND SPECIFICATIONS ARE THE PROPERTY AND COPYRIGHT OF LAUTERBACH & ASSOCIATES. ALL RIGHTS RESERVED, AND SHALL NOT BE USED ON ANY OTHER WORK OR PROJECT EXCEPT BY WRITTEN AGREEMENT WITH LAUTERBACH & ASSOCIATES. WRITTEN DIMENSIONS SHALL TAKE PRECEDENCE OVER SCALED DIMENSIONS AND SHALL BE VERIFIED ON THE JOB SITE. ANY DISCREPANCY SHALL BE BROUGHT TO THE NOTICE OF LAUTERBACH & ASSOCIATES PRIOR TO COMMENCEMENT OF ANY WORK.

G:\2019 Projects\20-190709 City of Oxnard-Sec 4-Fashion\Drawings\Architectural\20-190709 City of Oxnard - 234, 251, & 257 Fashion Park Apartments - CD.rvt

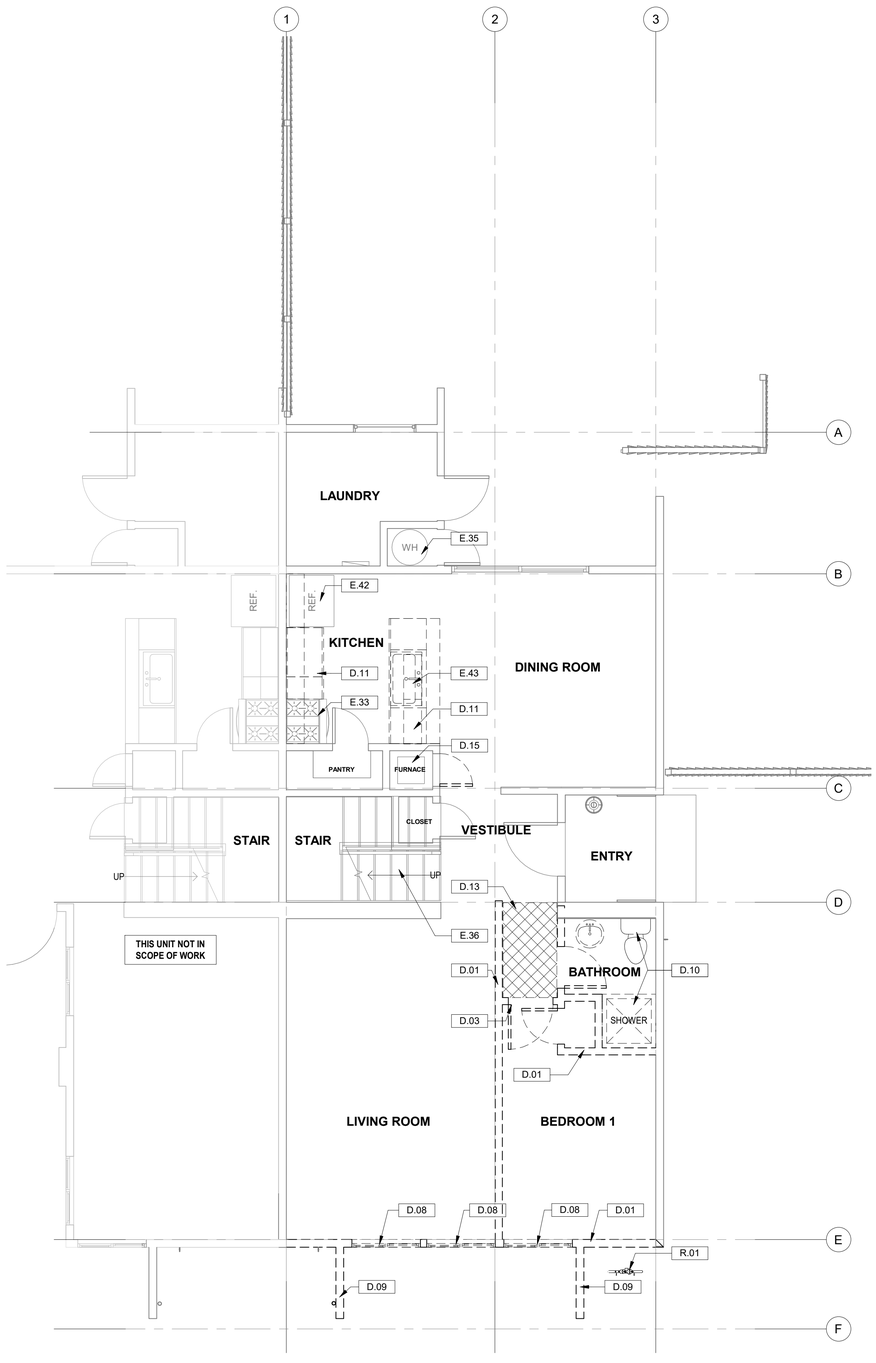

1 257 FLOOR PLAN - 1ST FLOOR - DEMOLITION - 251 REVERSED, 234 ROTATED
1/4" = 1'-0"

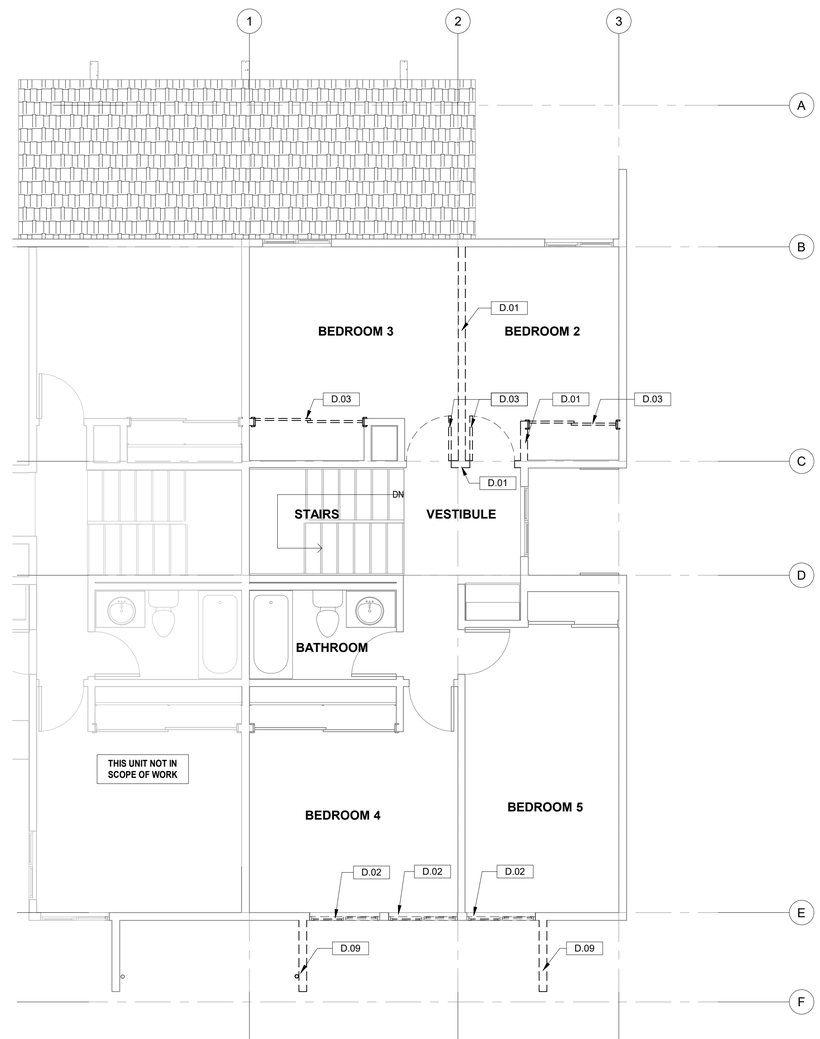

2 257 FLOOR PLAN - 2ND FLOOR - DEMOLITION - 251 REVERSED, 234 ROTATED
1/4" = 1'-0"

KEYNOTES - EXISTING TO REMAIN

E.33	EXISTING STOVE: (PROTECT AND STORE FOR CLIENTS RE-USE)
E.35	EXISTING WATER HEATER
E.36	EXISTING STAIRS AND RAILING
E.42	EXISTING REFRIGERATOR: (PROTECT AND STORE FOR CLIENTS RE-USE)
E.43	EXISTING KITCHEN SINK: (PROTECT AND STORE FOR CLIENTS RE-USE)

KEYNOTES - RELOCATE EXISTING

R.01	RELOCATE EXISTING BACKFLOW DEVICE

KEYNOTES - DEMOLITION

D.01	DEMOLISH EXISTING WALL, TYP.
D.02	DEMOLISH EXISTING WINDOW
D.03	DEMOLISH EXISTING DOOR AND FRAME
D.08	DEMOLISH EXISTING WINDOW AND PORTION OF WALL TO ALLOW FOR EXPANSION
D.09	DEMOLISH EXISTING WING WALL
D.10	DEMOLISH EXISTING SHOWER, TOILET AND VANITY
D.11	DEMOLISH EXISTING UPPER AND LOWER CABINETS AND COUNTER
D.13	DEMOLISH PORTION OF EXISTING SOFFIT AT NEW ACCESSIBLE UNIT
D.15	DEMOLISH EXISTING FORCED AIR FURNACE TO ALLOW FOR INSTALLLTION OF NEW FURNACE

GENERAL DEMOLITION NOTES

1. IT IS THE RESPONSIBILITY OF THE CONTRACTOR TO VERIFY ALL CLEARANCES AND INSTALLATION REQUIREMENTS OF CONSTRUCTION ITEMS AGAINST EXISTING CONDITIONS AND DISPOSE OF REMOVED MATERIALS PER THE ORDINANCE.
2. THE CITY OF OXNARD HOUSING AUTHORITY SHALL HAVE THE FIRST RIGHT OF SALVAGE OF ITEMS SHOWN FOR DEMOLITION.
3. SEE MECH., ELEC., AND PLUMB. DWG'S FOR ADDITIONAL DEMOLITION NOTES AND CORRECT LAYOUT FOR SAWCUTS.
4. VERIFY ALL EXISTING DOORS TO BE REMOVED WITH PROPOSED REPLACEMENT DOOR ASSEMBLIES FOR SUFFICIENT CLEARANCE AND FRAMING REQUIREMENTS. DEMOLISH PORTIONS OF EXISTING WALL FRAMING AS REQ'D AND PROVIDE NEW FRAMING PER DETAILS WHERE REQUIRED. SEE DOOR SCHEDULE.
5. REMOVE EXISTING FLOOR FINISHES, MASTICS, ETC. DOWN TO EXISTING SLAB OR PLYWOOD FLOOR WHERE REPLACEMENT FINISHES ARE INDICATED. PROVIDE PATCHING AND REFINISHING OF THE SURFACES PER MANUFACTURER'S SPECIFICATIONS FOR THE NEW FINISHES SELECTED TO INSURE PROPER INSTALLATION OF NEW FINISHES.
6. FOR EXISTING WALLS TO REMAIN, INSPECT FOR DAMAGE OF ANY KIND; REPLACE DAMAGED MATERIALS WITH NEW BEFORE NEW GYPSUM WALL BOARD IS APPLIED.
7. WHERE EXISTING PLUMBING AND OTHER UTILITIES ARE TO BE REMOVED, CAP ALL ABANDONED PIPING BELOW FINISH FLOOR AND WITHIN WALL, TYP. PRESERVE EXISTING ROUGH PLUMBING WHERE NECESSARY FOR RECONNECTION. SEE PLUMBING DRAWINGS.
8. EXISTING ITEMS TO REMAIN SHALL BE PROTECTED DURING DEMOLITION, OR TEMPORARILY REMOVED AND REPLACED AT CONTRACTOR'S OPTION.
9. PROTECT DURING DEMOLITION ANY STRUCTURAL ELEMENT TO REMAIN.
10. REMOVE EXISTING EXTERIOR PLASTER FINISHES AS REQUIRED. PROTECT EXISTING STRUCTURE FROM WEATHER OTHER DAMAGE DURING CONSTRUCTION, AND RESTORE MOISTURE PROTECTION SYSTEMS PRIOR TO INSTALLATION OF NEW PLASTER FINISHES.

NOTES:

1. DEMOLITION INCLUDES;
   A. REMOVAL OF GYPSUM BOARD CEILING AT FIRST FLOOR (ABOVE ACCESS COMPLIANT UNIT ONLY)
   B. REMOVAL OF DRYWALL ON THE WALLS TO ALLOW FOR NEW INSULATION INSTALLATION.
   C. REMOVAL OF FLOOR FINISHES TO SLAB AND PLYWOOD.
   D. ALERT ARCHITECT IF DAMAGE OR ROT IS FOUND.
2. FOR INTERIOR AND EXTERIOR TRENCHING LOCATIONS TO INSTALL UTILITIES, COORDINATE ARCHITECTURAL, STRUCTURAL, ELECTRICAL AND PLUMBING INFORMATION. VERIFY EXISTING UNDERGROUND CONDITIONS CURRENTLY UNKNOWN AND NOTIFY ARCHITECTS IF CONFLICTS ARE FOUND.
3. REFER TO SHEET A-201 FOR DEMOLITION ELEVATIONS

DEMOLITION LEGEND

	DEMOLISH WALL
	DEMOLISH SOFFIT

0' 2' 4' 8' 16'

LAUTERBACH & ASSOCIATES
ARCHITECTS • INC.
David C. Kesterson, Architect • Ilona Scott, Architect • Mark S. Pettit, Architect
300 MONTGOMERY AVENUE, OXNARD, CALIFORNIA 93036 | 805-988-0912 | FAX 805-981-4510 | www.la-arch.com

LICENSED ARCHITECT ILONA SCOTT No. C11881 Ren. 06/21 STATE OF CALIFORNIA

FASHION PARK APARTMENTS

234, 251 & 257 FASHION PARK
OXNARD, CA, 93036

CITY OF OXNARD HOUSING AUTHORITY

435 S. D STREET
OXNARD, CALIFORNIA 93030

NO	DESCRIPTION	DATE
1	PI ch submittal	04/08/2020

ISSUE

JOB NO. 20-190709

DRAWN BY: TJL
CHECKED BY: ISS
PROJECT MANAGER: ISS
PRINT DATE: 4/8/2020 3:04:32 AM

DEMO FLOOR PLANS - 1ST & 2ND

A-100

THESE DRAWINGS AND SPECIFICATIONS ARE THE PROPERTY AND COPYRIGHT OF LAUTERBACH & ASSOCIATES. ALL RIGHTS RESERVED, AND SHALL NOT BE USED ON ANY OTHER WORK OR PROJECT EXCEPT BY WRITTEN AGREEMENT WITH LAUTERBACH & ASSOCIATES. WRITTEN DIMENSIONS SHALL TAKE PRECEDENCE OVER SCALED DIMENSIONS AND SHALL BE VERIFIED ON THE JOB SITE. ANY DISCREPANCY SHALL BE BROUGHT TO THE NOTICE OF LAUTERBACH & ASSOCIATES PRIOR TO COMMENCEMENT OF ANY WORK.

G:\2019 Projects\20-190709 City of Oxnard-Set 4-Fashion\Drawings\Architectural\20-190709 City of Oxnard - 234, 251, & 257 Fashion Park Apartments - CD.rvt

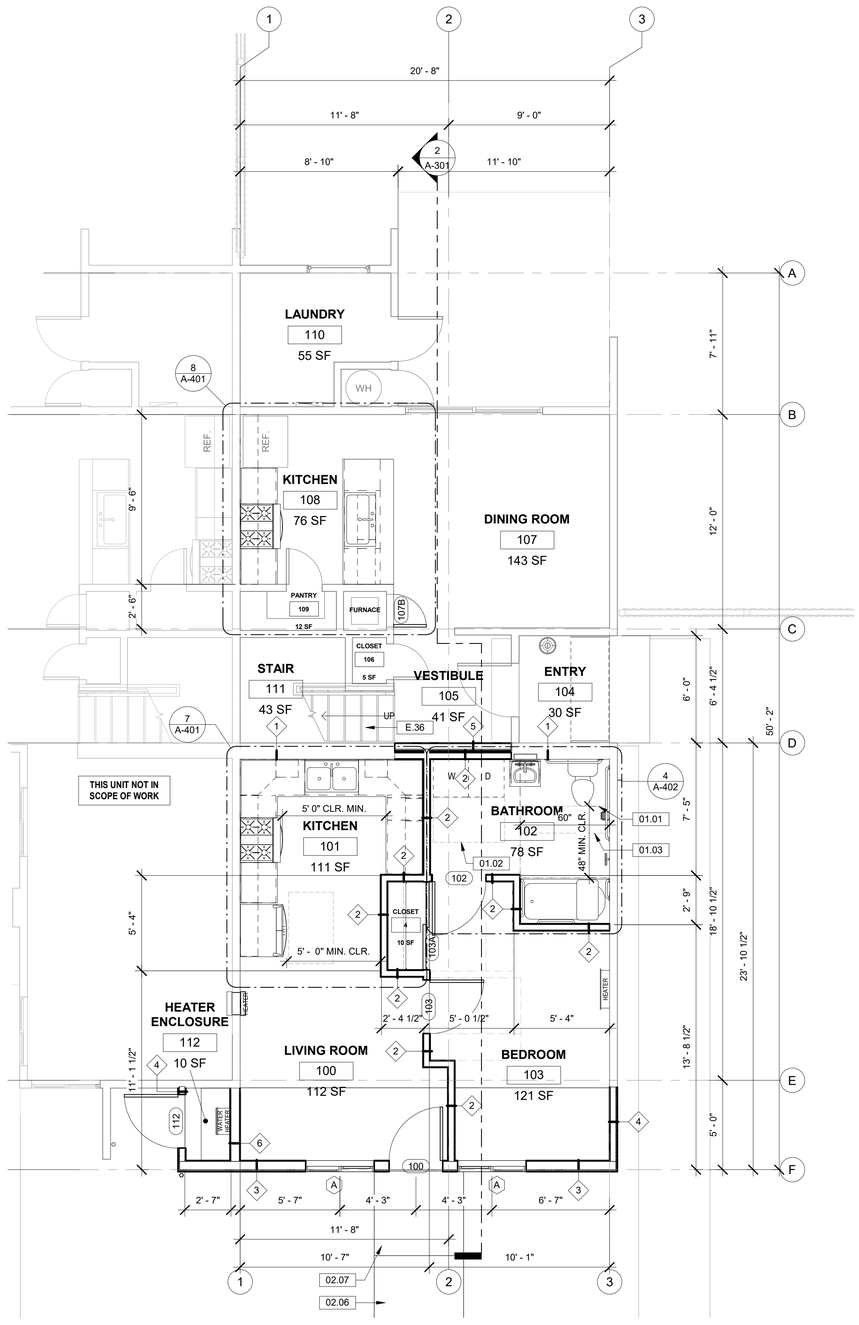

1 257 - 1ST FLOOR - PROPOSED - 251 REVERSED, 234 ROTATED
1/4" = 1'-0"

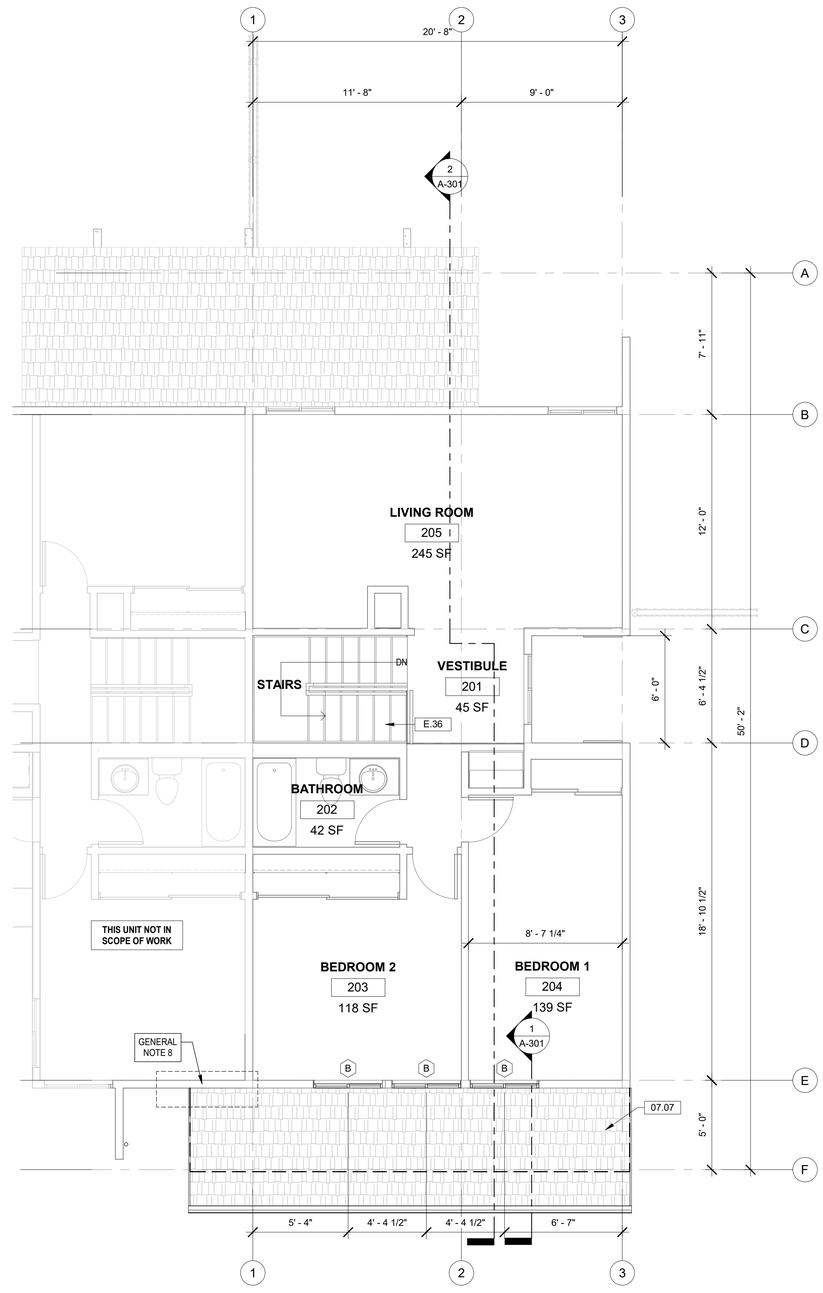

2 257 - 2ND FLOOR - PROPOSED - 251 REVERSED, 234 ROTATED
1/4" = 1'-0"

KEYNOTES - EXISTING TO REMAIN

E.36	EXISTING STAIRS AND RAILING

KEYNOTES

01.01	66"x60" CLEAR TOILET SPACE
01.02	30"x48" CLEAR SPACE
01.03	48"X60" CLEAR TUB SPACE
02.06	SLOPED WALK NOT TO EXCEED 5% SLOPE
02.07	LANDING LESS THAN 2% SLOPE IN ALL DIRECTIONS
07.07	NEW ROOF

GENERAL NOTES

1. CONTRACTOR TO VERIFY EXISTING WINDOW OPENINGS IN FIELD.
2. FOR NEW WATER HEATER ENCLOSURE, VERIFY MANUFACTURERS' MINIMUM CLEARANCE GUIDELINES.
3. WHERE WINDOWS AND DOORS ARE REMOVED AND NOT REPLACED INFILL TO MATCH SURROUNDING WALLS, WATERPROOF AND INSTALL EXTERIOR CEMENT PLASTER AND INTERIOR DRYWALL.
4. WHERE NEW WALLS ARE ADDED ADJACENT TO EXISTING WALL THEY SHALL BE FLUSH, SMOOTH, LEVEL, AND SEAMLESS.
5. REPAIR, WATERPROOF AND REPLACE WITH CEMENT PLASTER ANY AREAS DAMAGED BY WORK.
6. PAINT EXTERIOR NEW TO MATCH EXISTING. COLORS FOR EXTERIOR CEMENT PLASTER, DOORS, TRIMS, FASCIA, GUTTERS AND DOWNSPOUTS SELECTED BY CLIENT.
7. WHERE EXISTING UTILITIES ARE IN THE PATH OF CONSTRUCTION, RELOCATE PER CITY STANDARDS.
8. CONTRACTOR TO REVIEW EXISTING CONDITIONS AND REQUIREMENTS OF NEW CONSTRUCTION TO DETERMINE EXTENT OF REPAIRS REQUIRED AT THIS AREA. IF POSSIBLE, ALL WORK TO BE PERFORMED AT EXTERIOR.

WALL LEGEND

EXISTING WALL

NEW WALL

FOR WALL TYPES SEE SHEET A-602

A FOR WINDOW TYPES SEE SHEET A-601

0' 2' 4' 8' 16'

LAUTERBACH & ASSOCIATES
ARCHITECTS INC.
David C. Kesterson, Architect • Ilona Scott, Architect • Mark S. Pettit, Architect
300 MONTGOMERY AVENUE, OXNARD, CALIFORNIA 93036 | 805-988-0912 | FAX 805-981-4510 | www.la-arch.com

LICENSED ARCHITECT
ILONA SCOTT
No. C11881
Ren. 06/21
STATE OF CALIFORNIA

FASHION PARK APARTMENTS

234, 251 & 257 FASHION PARK
OXNARD, CA, 93036

CITY OF OXNARD HOUSING AUTHORITY

435 S. D STREET
OXNARD, CALIFORNIA 93030

NO	DESCRIPTION	DATE
1	PI ch submittal	04/08/2020

ISSUE

JOB NO. 20-190709

DRAWN BY: TJL
CHECKED BY: ISS
PROJECT MANAGER: ISS
PRINT DATE: 4/8/2020 3:03:32 AM

FLOOR PLANS - 1ST & 2ND

A-101

THESE DRAWINGS AND SPECIFICATIONS ARE THE PROPERTY AND COPYRIGHT OF LAUTERBACH & ASSOCIATES. ALL RIGHTS RESERVED, AND SHALL NOT BE USED ON ANY OTHER WORK OR PROJECT EXCEPT BY WRITTEN AGREEMENT WITH LAUTERBACH & ASSOCIATES. WRITTEN DIMENSIONS SHALL TAKE PRECEDENCE OVER SCALED DIMENSIONS AND SHALL BE VERIFIED ON THE JOB SITE. ANY DISCREPANCY SHALL BE BROUGHT TO THE NOTICE OF LAUTERBACH & ASSOCIATES PRIOR TO COMMENCEMENT OF ANY WORK.

G:\2019 Projects\20-190709 City of Oxnard-Set 4-Fashion\Drawings\Architectural\20-190709 City of Oxnard - 234, 251, & 257 Fashion Park Apartments - CD.rvt

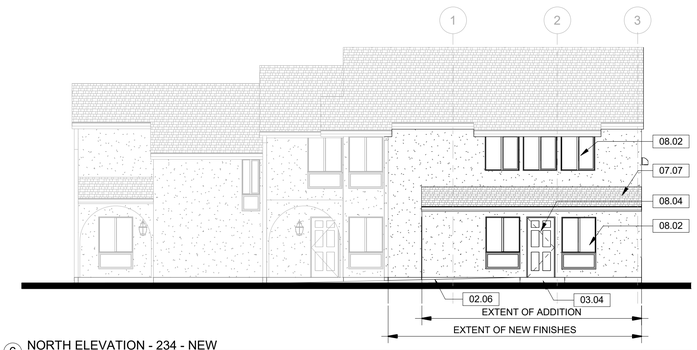

6 NORTH ELEVATION - 234 - NEW
1/8" = 1'-0"

3 UNIT 234 ELEVATION (NORTH) DEMOLITION
1/8" = 1'-0"

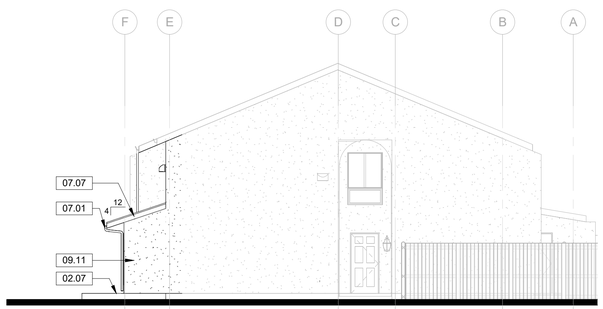

5 257 (EAST) ELEVATION 251 (WEST) MIRRORED, 234 (WEST) ROTATED - NEW
1/8" = 1'-0"

2 257 (EAST) ELEVATION 251 (WEST) MIRRORED, 234 (WEST) ROTATED - DEMOLITION
1/8" = 1'-0"

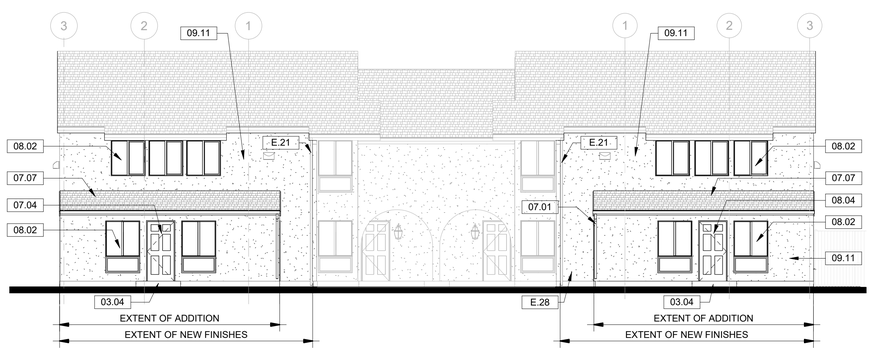

4 251 - 257 ELEVATION (SOUTH) - NEW
1/8" = 1'-0"

1 251 - 257 ELEVATION (SOUTH) DEMOLITION
1/8" = 1'-0"

KEYNOTES - EXISTING TO REMAIN

E.21	EXISTING ROOF GUTTER AND DOWNSPOUT
E.28	EXISTING HOSE BIBB
E.44	EXISTING WEEP SCREED

KEYNOTES - DEMOLITION

D.02	DEMOLISH EXISTING WINDOW
D.08	DEMOLISH EXISTING WINDOW AND PORTION OF WALL TO ALLOW FOR EXPANSION
D.09	DEMOLISH EXISTING WING WALL
D.12	DEMOLISH EXISTING PORTION OF WALL
D.16	DEMOLISH EXISTING PLASTER WALL FINISHES

KEYNOTES

02.06	SLOPED WALK NOT TO EXCEED 5% SLOPE
02.07	LANDING LESS THAN 2% SLOPE IN ALL DIRECTIONS
03.04	CONCRETE STOOP, 2% SLOPE MAXIMUM IN ALL DIRECTIONS
07.01	RAIN GUTTER AND DOWNSPOUT, PAINTED TO MATCH WALL SURFACE
07.04	BATT INSULATION
07.07	NEW ROOF
08.02	WINDOW - SEE FLOOR PLAN
08.04	DOOR - SEE FLOOR PLAN
09.11	CEMENT PLASTER TO MATCH EXISTING

GENERAL DEMOLITION NOTES

1. IT IS THE RESPONSIBILITY OF THE CONTRACTOR TO VERIFY ALL CLEARANCES AND INSTALLATION REQUIREMENTS OF CONSTRUCTION ITEMS AGAINST EXISTING CONDITIONS AND DISPOSE OF REMOVED MATERIALS PER THE ORDINANCE.
2. THE CITY OF OXNARD HOUSING AUTHORITY SHALL HAVE THE FIRST RIGHT OF SALVAGE OF ITEMS SHOWN FOR DEMOLITION.
3. SEE MECH., ELEC., AND PLUMB. DWG'S FOR ADDITIONAL DEMOLITION NOTES AND CORRECT LAYOUT FOR SAWCUTS.
4. VERIFY ALL EXISTING DOORS TO BE REMOVED WITH PROPOSED REPLACEMENT DOOR ASSEMBLIES FOR SUFFICIENT CLEARANCE AND FRAMING REQUIREMENTS. DEMOLISH PORTIONS OF EXISTING WALL FRAMING AS REQ'D AND PROVIDE NEW FRAMING PER DETAILS WHERE REQUIRED. SEE DOOR SCHEDULE.
5. REMOVE EXISTING FLOOR FINISHES, MASTICS, ETC. DOWN TO EXISTING SLAB OR PLYWOOD FLOOR WHERE REPLACEMENT FINISHES ARE INDICATED. PROVIDE PATCHING AND REFINISHING OF THE SURFACES PER MANUFACTURER'S SPECIFICATIONS FOR THE NEW FINISHES SELECTED TO INSURE PROPER INSTALLATION OF NEW FINISHES.
6. FOR EXISTING WALLS TO REMAIN, INSPECT FOR DAMAGE OF ANY KIND; REPLACE DAMAGED MATERIALS WITH NEW BEFORE NEW GYPSUM WALL BOARD IS APPLIED.
7. WHERE EXISTING PLUMBING AND OTHER UTILITIES ARE TO BE REMOVED, CAP ALL ABANDONED PIPING BELOW FINISH FLOOR AND WITHIN WALL, TYP. PRESERVE EXISTING ROUGH PLUMBING WHERE NECESSARY FOR RECONNECTION. SEE PLUMBING DRAWINGS.
8. EXISTING ITEMS TO REMAIN SHALL BE PROTECTED DURING DEMOLITION, OR TEMPORARILY REMOVED AND REPLACED AT CONTRACTOR'S OPTION.
9. PROTECT DURING DEMOLITION ANY STRUCTURAL ELEMENT TO REMAIN.
10. REMOVE EXISTING EXTERIOR PLASTER FINISHES AS REQUIRED. PROTECT EXISTING STRUCTURE FROM WEATHER OTHER DAMAGE DURING CONSTRUCTION, AND RESTORE MOISTURE PROTECTION SYSTEMS PRIOR TO INSTALLATION OF NEW PLASTER FINISHES.

GENERAL NOTES

1. CONTRACTOR TO VERIFY EXISTING WINDOW OPENINGS IN FIELD.
2. FOR NEW WATER HEATER ENCLOSURE, VERIFY MANUFACTURERS' MINIMUM CLEARANCE GUIDELINES.
3. WHERE WINDOWS AND DOORS ARE REMOVED AND NOT REPLACED INFILL TO MATCH SURROUNDING WALLS, WATERPROOF AND INSTALL EXTERIOR CEMENT PLASTER AND INTERIOR DRYWALL.
4. WHERE NEW WALLS ARE ADDED ADJACENT TO EXISTING WALL THEY SHALL BE FLUSH, SMOOTH, LEVEL, AND SEAMLESS.
5. REPAIR, WATERPROOF AND REPLACE WITH CEMENT PLASTER ANY AREAS DAMAGED BY WORK.
6. PAINT EXTERIOR NEW TO MATCH EXISTING. COLORS FOR EXTERIOR CEMENT PLASTER, DOORS, TRIMS, FASCIA, GUTTERS AND DOWNSPOUTS SELECTED BY CLIENT.
7. WHERE EXISTING UTILITIES ARE IN THE PATH OF CONSTRUCTION, RELOCATE PER CITY STANDARDS.
8. CONTRACTOR TO REVIEW EXISTING CONDITIONS AND REQUIREMENTS OF NEW CONSTRUCTION TO DETERMINE EXTENT OF REPAIRS REQUIRED AT THIS AREA. IF POSSIBLE, ALL WORK TO BE PERFORMED AT EXTERIOR.

THESE DRAWINGS AND SPECIFICATIONS ARE THE PROPERTY AND COPYRIGHT OF LAUTERBACH & ASSOCIATES. ALL RIGHTS RESERVED, AND SHALL NOT BE USED ON ANY OTHER WORK OR PROJECT EXCEPT BY WRITTEN AGREEMENT WITH LAUTERBACH & ASSOCIATES. WRITTEN DIMENSIONS SHALL TAKE PRECEDENCE OVER SCALED DIMENSIONS AND SHALL BE VERIFIED ON THE JOB SITE. ANY DISCREPANCY SHALL BE BROUGHT TO THE NOTICE OF LAUTERBACH & ASSOCIATES PRIOR TO COMMENCEMENT OF ANY WORK.

LAUTERBACH & ASSOCIATES
ARCHITECTS INC.
David C. Kesterson, Architect • Ilona Scott, Architect • Mark S. Pettit, Architect
300 MONTGOMERY AVENUE, OXNARD, CALIFORNIA 93036 | 805-988-0912 | FAX 805-981-4510 | www.la-arch.com

LICENSED ARCHITECT
ILONA SCOTT
No. C11881
Ren. 06/21
STATE OF CALIFORNIA

FASHION PARK APARTMENTS

234, 251 & 257 FASHION PARK
OXNARD, CA, 93036

CITY OF OXNARD HOUSING AUTHORITY

435 S. D STREET
OXNARD, CALIFORNIA 93030

NO	DESCRIPTION	DATE
1	PI ch submittal	04/08/2020

ISSUE

JOB NO. 20-190709

DRAWN BY: TJL
CHECKED BY: ISS
PROJECT MANAGER: ISS
PRINT DATE: 4/8/2020 3:02:11 AM

ELEVATIONS

A-201

G:\2019 Projects\20-190709 City of Oxnard-Set 4-Fashion\Drawings\Architectural\20-190709 City of Oxnard - 234, 251, & 257 Fashion Park Apartments - CD.rvt

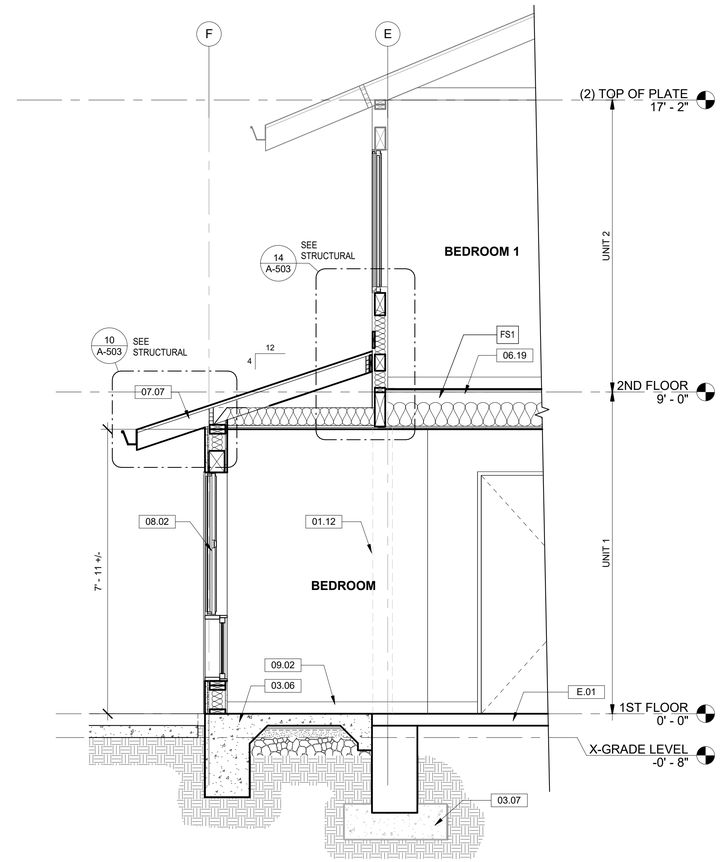

1 ENLARGED SECTION AT ADDITION
1/2" = 1'-0"

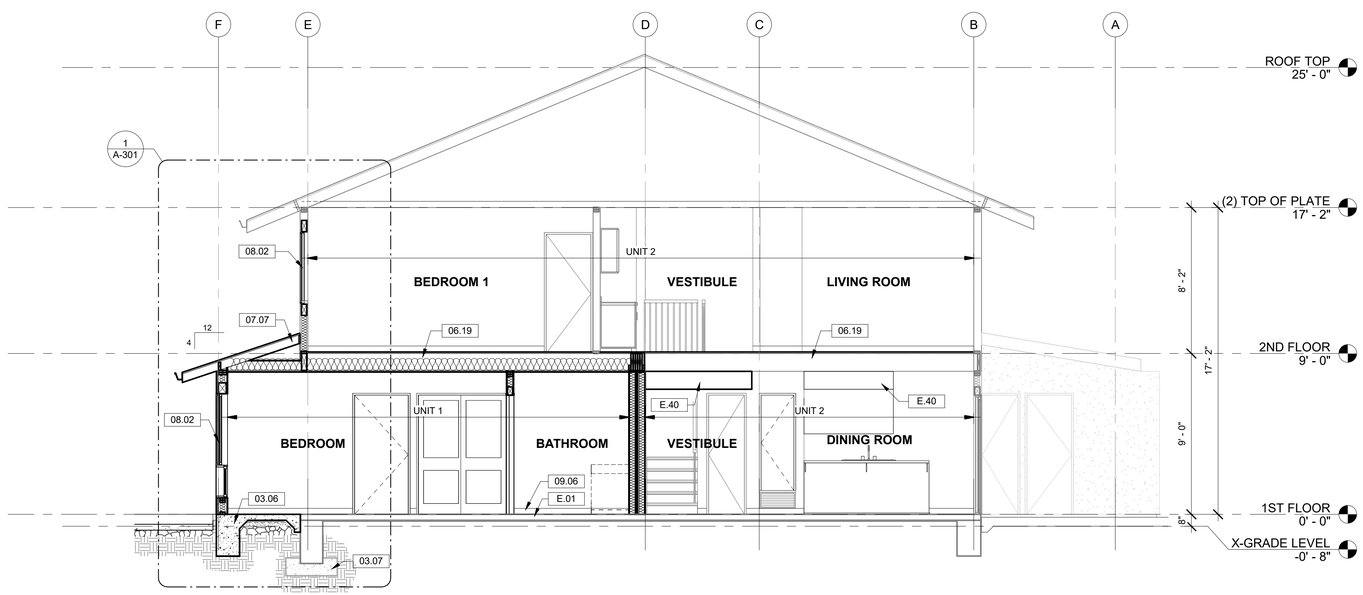

2 BUILDING SECTION
1/4" = 1'-0"

KEYNOTES - EXISTING TO REMAIN

E.01	EXISTING CONCRETE SLAB AND FOOTING
E.40	EXISTING SOFFIT

KEYNOTES

01.12	LINE OF DEMOLISHED EXTERIOR WALL
03.06	NEW CONCRETE SLAB AND FOOTING
03.07	NEW CONCRETE PAD BELOW, BEYOND
06.19	EXISTING FLOOR CEILING SYSTEM MODIFIED FOR FIRE AND SOUND, SEE F.S.1/A-602
07.07	NEW ROOF
08.02	WINDOW - SEE FLOOR PLAN
09.02	4" WALL BASE (PER SCHEDULE)
09.06	VINYL FLOORING

LAUTERBACH & ASSOCIATES
ARCHITECTS INC.
David C. Kesterson, Architect • Ilona Scott, Architect • Mark S. Pettit, Architect
300 MONTGOMERY AVENUE, OXNARD, CALIFORNIA 93036 | 805-988-0912 | FAX 805-981-4510 | www.la-arch.com

LICENSED ARCHITECT
ILONA SCOTT
No. C11881
Ren. 06/21
STATE OF CALIFORNIA

FASHION PARK APARTMENTS

234, 251 & 257 FASHION PARK
OXNARD, CA, 93036

CITY OF OXNARD HOUSING AUTHORITY

435 S. D STREET
OXNARD, CALIFORNIA 93030

NO	DESCRIPTION	DATE
1	PI ch submittal	04/08/2020

ISSUE

JOB NO. 20-190709

DRAWN BY: TJL
CHECKED BY: ISS
PROJECT MANAGER: ISS
PRINT DATE: 4/8/2020 3:01:03 AM

BUILDING SECTIONS

A-301

THESE DRAWINGS AND SPECIFICATIONS ARE THE PROPERTY AND COPYRIGHT OF LAUTERBACH & ASSOCIATES. ALL RIGHTS RESERVED, AND SHALL NOT BE USED ON ANY OTHER WORK OR PROJECT EXCEPT BY WRITTEN AGREEMENT WITH LAUTERBACH & ASSOCIATES. WRITTEN DIMENSIONS SHALL TAKE PRECEDENCE OVER SCALED DIMENSIONS AND SHALL BE VERIFIED ON THE JOB SITE. ANY DISCREPANCY SHALL BE BROUGHT TO THE NOTICE OF LAUTERBACH & ASSOCIATES PRIOR TO COMMENCEMENT OF ANY WORK.

G:\2019 Projects\20-190709 City of Oxnard-Set 4-Fashion\Drawings\Architectural\20-190709 City of Oxnard - 234, 251, & 257 Fashion Park Apartments - CD.rvt

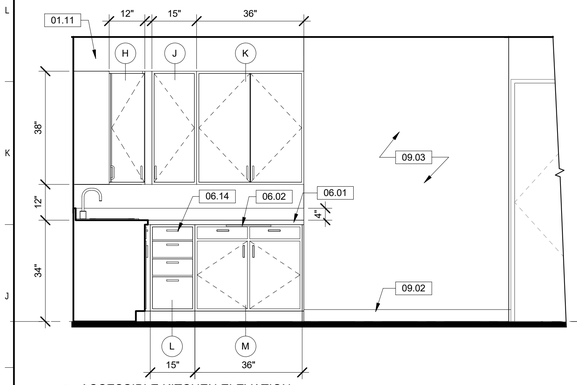

1 ACCESSIBLE KITCHEN ELEVATION
1/2" = 1'-0"

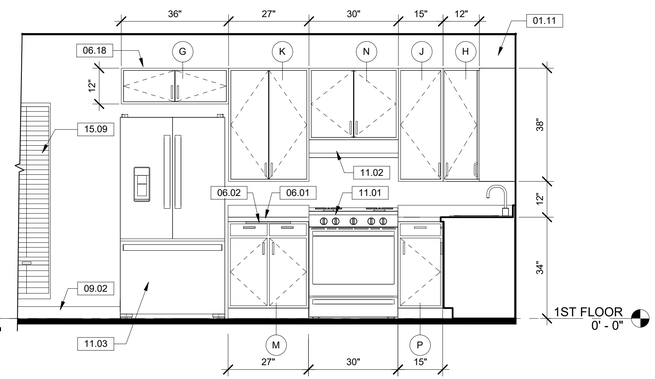

2 ACCESSIBLE KITCHEN ELEVATION
1/2" = 1'-0"

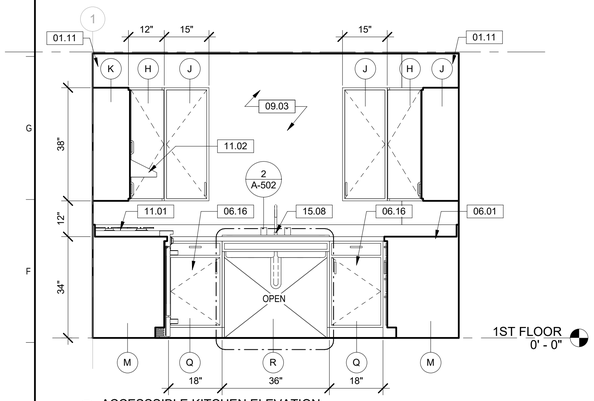

3 ACCESSSIBLE KITCHEN ELEVATION
1/2" = 1'-0"

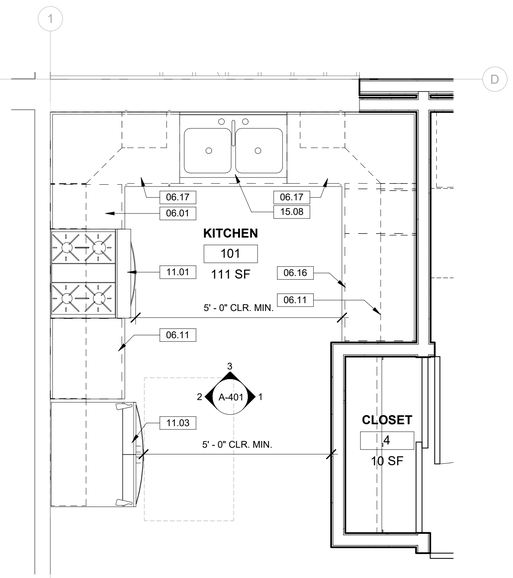

7 ENLARGED - ACCESSIBLE KITCHEN
1/2" = 1'-0"

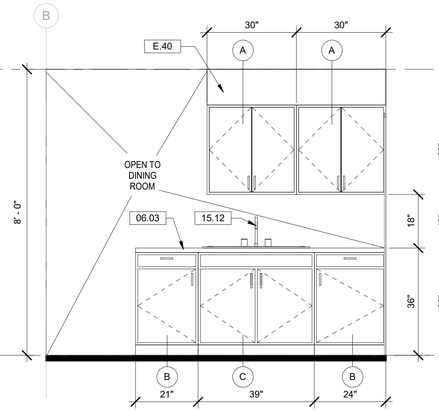

4 STANDARD KITCHEN ELEVATION
1/2" = 1'-0"

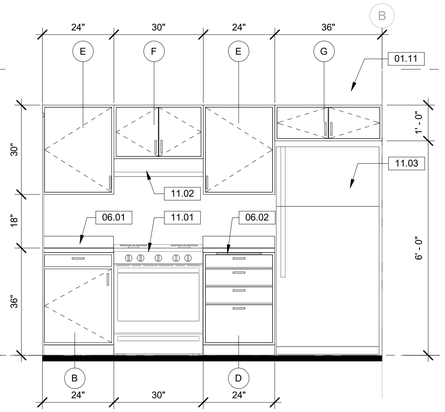

5 STANDARD KITCHEN ELEVATION
1/2" = 1'-0"

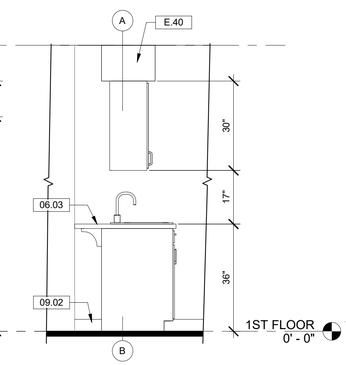

6 NEW KITCHEN COUNTER ELEVATION
1/2" = 1'-0"

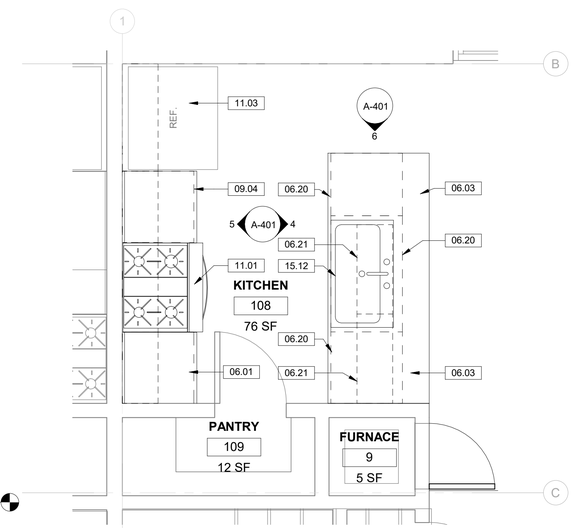

8 ENLARGED - STANDARD KITCHEN
1/2" = 1'-0"

KEYNOTES - EXISTING TO REMAIN

E.40	EXISTING SOFFIT

KEYNOTES

01.11	OPEN TO WALL ABOVE CABINETS
06.01	24" COUNTERTOP WITH 4" BACKSPLASH, ROUNDED CORNERS
06.02	15" PULL-OUT BREADBOARD
06.03	ISLAND COUNTER TOP
06.11	ACCESSIBLE CASE WORK WITH ADJUSTABLE SHELVES, TYP.
06.14	ACCESSIBLE BASE DRAWER UNIT
06.16	ACCESSIBLE BASE CABINET
06.17	ACCESSIBLE BASE CABINET WITH EXTENDED SHELVING, NO PARTITION
06.18	SAFETY TRIM AT UPPER CABINET, TYP.
06.20	BASE CABINET
06.21	UPPER CABINET
09.02	4" WALL BASE (PER SCHEDULE)
09.03	GYPSUM BOARD, PAINTED
09.04	INSTALL NEW GYPSUM WALLBOARD PREP AND PAINT PER SCHEDULE
11.01	ENERGY STAR RANGE/ OVEN
11.02	RANGE HOOD
11.03	ENERGY STAR, ADA REFRIGERATOR
15.08	ACCESSIBLE KITCHEN SINK WITH PROTECTIVE INSULATED COVER FOR DRAIN PIPE, FAUCET TO BE ACCESSIBLE - REFER TO 2/A-502
15.09	WALL MOUNTED FURNACE - WILLIAMS #2509622, REFER TO MECHANICAL PLANS
15.12	KITCHEN SINK

CASEWORK SCHEDULE

MARK	TYPE	DEPTH
A	UPPER - DOUBLE DOOR	1' - 0"
B	BASE - SINGLE DOOR WITH DRAWER	2' - 0"
C	BASE - SINK UNIT WITH DOUBLE DOORS	2' - 0"
D	BASE - 4 DRAWERS WITH BREAD BOARD	2' - 0"
E	UPPER - SINGLE DOOR	1' - 0"
F	UPPER - DOUBLE DOOR ABOVE STOVE/OVEN	1' - 0"
G	UPPER - DOUBLE DOOR ABOVER REFRIGERATOR	1' - 0"
H	UPPER - ACCESSIBLE CORNER UNIT	1' - 0"
J	UPPER - ACCESSIBLE SINGLE DOOR	1' - 0"
K	UPPER - ACCESSIBLE DOUBLE DOOR	1' - 0"
L	BASE - ACCESSIBLE 4 DRAWER	2' - 0"
M	BASE - ACCESSIBLE DOUBLE DOOR W/ 15" BREAD BOARD	2' - 0"
N	UPPER - ACCESSIBLE ABOVE STOVE/OVEN	1' - 0"
P	BASE - ACCESSIBLE SINGLE DOOR	2' - 0"
Q	BASE - ACCESSIBLE CORNER CABINET WITH EXTENDED SHELVES	2' - 0"
S	BASE - ACCESSIBLE OPEN SINK UNIT	2' - 0"

GENERAL NOTES

1. PROVIDE SHOP DRAWINGS FOR CASEWORK.
2. THERE SHALL BE NO SHARP OR ABRASIVE SURFACES UNDER THE SINK.
3. FOR APPLIANCES SEE APPLIANCE SCHEDULE ON SHEET A-601
4. FOR ADDITIONAL REQUIRED CLEARANCES AND HEIGHT DIMENSIONS TO CONFORM WITH ACCESSIBILITY REQUIREMENTS SEE SHEET A-502.

LEGEND

(A) CASEWORK PER PLANS AND SCHEDULE ON SHEET A-602

0' 1' 2' 4' 8'

LAUTERBACH & ASSOCIATES
ARCHITECTS INC.
David C. Kesterson, Architect • Ilona Scott, Architect • Mark S. Pettit, Architect
300 MONTGOMERY AVENUE, OXNARD, CALIFORNIA 93036 | 805-988-0912 | FAX 805-981-4510 | www.la-arch.com

LICENSED ARCHITECT
ILONA SCOTT
No. C11881
Ren. 06/21
STATE OF CALIFORNIA

FASHION PARK APARTMENTS

234, 251 & 257 FASHION PARK
OXNARD, CA, 93036

CITY OF OXNARD HOUSING AUTHORITY

435 S. D STREET
OXNARD, CALIFORNIA 93030

NO	DESCRIPTION	DATE
1	PI ch submittal	04/08/2020

ISSUE

JOB NO. 20-190709

DRAWN BY: TJL
CHECKED BY: ISS
PROJECT MANAGER: ISS
PRINT DATE: 4/8/2020 2:59:56 AM

LSV - KITCHENS

A-401

THESE DRAWINGS AND SPECIFICATIONS ARE THE PROPERTY AND COPYRIGHT OF LAUTERBACH & ASSOCIATES. ALL RIGHTS RESERVED, AND SHALL NOT BE USED ON ANY OTHER WORK OR PROJECT EXCEPT BY WRITTEN AGREEMENT WITH LAUTERBACH & ASSOCIATES. WRITTEN DIMENSIONS SHALL TAKE PRECEDENCE OVER SCALED DIMENSIONS AND SHALL BE VERIFIED ON THE JOB SITE. ANY DISCREPANCY SHALL BE BROUGHT TO THE NOTICE OF LAUTERBACH & ASSOCIATES PRIOR TO COMMENCEMENT OF ANY WORK.

G:\2019 Projects\20-190709 City of Oxnard\Set 4-Fashion\Drawings\Architectural\20-190709 City of Oxnard - 234, 251, & 257 Fashion Park Apartments - CD.rvt

KEYNOTES

09.02	4" WALL BASE (PER SCHEDULE)
09.03	GYPSUM BOARD, PAINTED
10.01	42" GRAB BAR
10.02	36" GRAB BAR
10.03	MEDICINE CABINET
10.05	TOWEL RING
10.07	TOILET TISSUE HOLDER
10.09	CURTAIN ROD
15.02	FIBERGLASS BATH TUB/SHOWER ENCLOSURE, ACCESSIBLE BARS AND REMOVABLE SEAT
15.03	WATER CLOSET

CASEWORK SCHEDULE

MARK	TYPE	DEPTH
A	UPPER - DOUBLE DOOR	1' - 0"
B	BASE - SINGLE DOOR WITH DRAWER	2' - 0"
C	BASE - SINK UNIT WITH DOUBLE DOORS	2' - 0"
D	BASE - 4 DRAWERS WITH BREAD BOARD	2' - 0"
E	UPPER - SINGLE DOOR	1' - 0"
F	UPPER - DOUBLE DOOR ABOVE STOVE/OVEN	1' - 0"
G	UPPER - DOUBLE DOOR ABOVER REFRIGERATOR	1' - 0"
H	UPPER - ACCESSIBLE CORNER UNIT	1' - 0"
J	UPPER - ACCESSIBLE SINGLE DOOR	1' - 0"
K	UPPER - ACCESSIBLE DOUBLE DOOR	1' - 0"
L	BASE - ACCESSIBLE 4 DRAWER	2' - 0"
M	BASE - ACCESSIBLE DOUBLE DOOR W/ 15" BREAD BOARD	2' - 0"
N	UPPER - ACCESSIBLE ABOVE STOVE/OVEN	1' - 0"
P	BASE - ACCESSIBLE SINGLE DOOR	2' - 0"
Q	BASE - ACCESSIBLE CORNER CABINET WITH EXTENDED SHELVES	2' - 0"
S	BASE - ACCESSIBLE OPEN SINK UNIT	2' - 0"

GENERAL NOTES

1. PROVIDE SHOP DRAWINGS FOR CASEWORK.
2. THERE SHALL BE NO SHARP OR ABRASIVE SURFACES UNDER THE SINK.
3. FOR APPLIANCES SEE APPLIANCE SCHEDULE ON SHEET A-601
4. FOR ADDITIONAL REQUIRED CLEARANCES AND HEIGHT DIMENSIONS TO CONFORM WITH ACCESSIBILITY REQUIREMENTS SEE SHEET A-502.

LEGEND

(A) CASEWORK PER PLANS AND SCHEDULE ON SHEET A-602

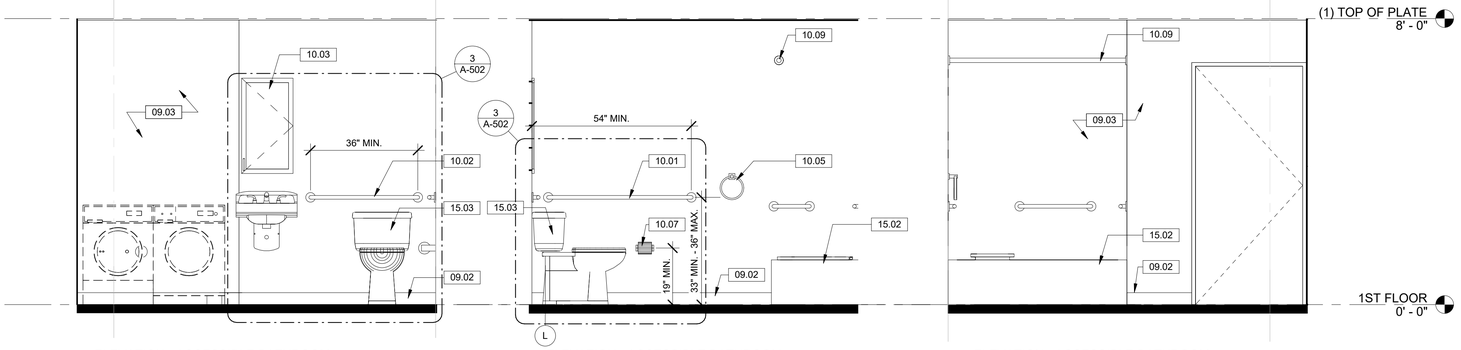

1 ELEVATION - ACCESSIBLE BATHROOM
1/2" = 1'-0"

2 ELEVATION - ACCESSIBLE BATHROOM
1/2" = 1'-0"

3 ELEVATION - ACCESSIBLE BATHROOM
1/2" = 1'-0"

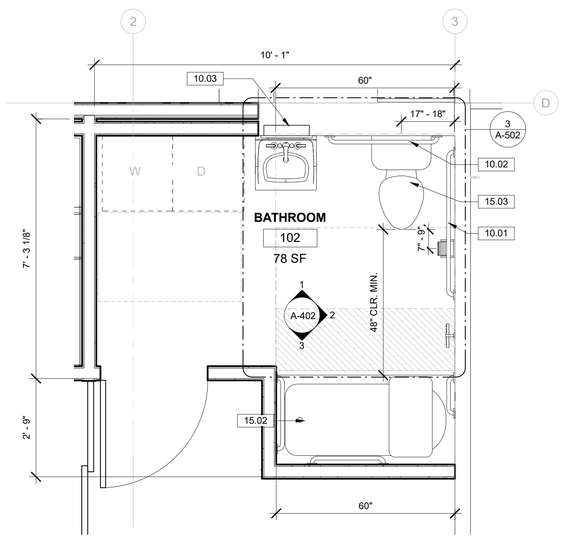

4 ENLARGED - ACCESSIBLE BATHROOM/ LAUNDRY
1/2" = 1'-0"

0' 1' 2' 4' 8'

LAUTERBACH & ASSOCIATES
ARCHITECTS • INC.
David C. Kesterson, Architect • Ilona Scott, Architect • Mark S. Pettit, Architect
300 MONTGOMERY AVENUE, OXNARD, CALIFORNIA 93036 | 805-988-0912 | FAX 805-981-4510 | www.la-arch.com

LICENSED ARCHITECT
ILONA SCOTT
No. C11881
Ren. 06/21
STATE OF CALIFORNIA

FASHION PARK APARTMENTS

234, 251 & 257 FASHION PARK
OXNARD, CA, 93036

CITY OF OXNARD HOUSING AUTHORITY

435 S. D STREET
OXNARD, CALIFORNIA 93030

NO	DESCRIPTION	DATE
1	PI ch submittal	04/08/2020

ISSUE

JOB NO. 20-190709

DRAWN BY: TJL
CHECKED BY: ISS
PROJECT MANAGER: ISS
PRINT DATE: 4/8/2020 2:58:54 AM

LSV - BATHROOM

A-402

THESE DRAWINGS AND SPECIFICATIONS ARE THE PROPERTY AND COPYRIGHT OF LAUTERBACH & ASSOCIATES. ALL RIGHTS RESERVED, AND SHALL NOT BE USED ON ANY OTHER WORK OR PROJECT EXCEPT BY WRITTEN AGREEMENT WITH LAUTERBACH & ASSOCIATES. WRITTEN DIMENSIONS SHALL TAKE PRECEDENCE OVER SCALED DIMENSIONS AND SHALL BE VERIFIED ON THE JOB SITE. ANY DISCREPANCY SHALL BE BROUGHT TO THE NOTICE OF LAUTERBACH & ASSOCIATES PRIOR TO COMMENCEMENT OF ANY WORK.

G:\2019 Projects\20-190709 City of Oxnard-Set 4-Fashion\Drawings\Architectural\20-190709 City of Oxnard - 234, 251, & 257 Fashion Park Apartments - CD.rvt

INTERNATIONAL SYMBOL OF ACCESSIBILITY

PAINTED FIELD:
BLUE TRAFFIC PAINT
3'-0" SQUARE WITH
3" RADIUS CORNERS

PAINTED SYMBOL:
WHITE TRAFFIC PAINT
MIN. 3" WIDE STRIPING

5 ACCESS - Symbol of Accessiblity
3/4" = 1'-0"

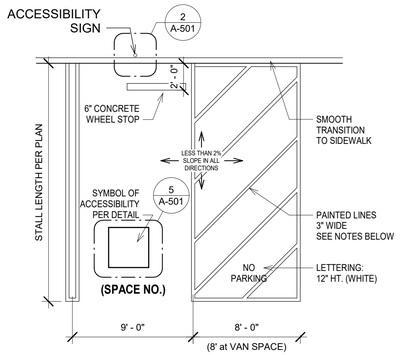

NOTE: ACCESS COMPLAINT STALLS TO BE STRIPED WITH BLUE PAINT

4 ACCESS - Parking Stall - Van
3/16" = 1'-0"

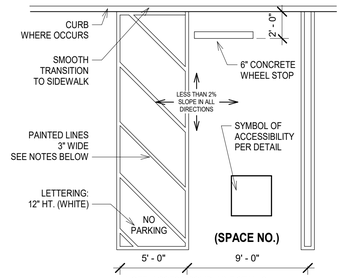

NOTE: ACCESS COMPLAINT STALLS TO BE STRIPED WITH BLUE PAINT

3 ACCESS - Parking Stall - Standard
3/16" = 1'-0"

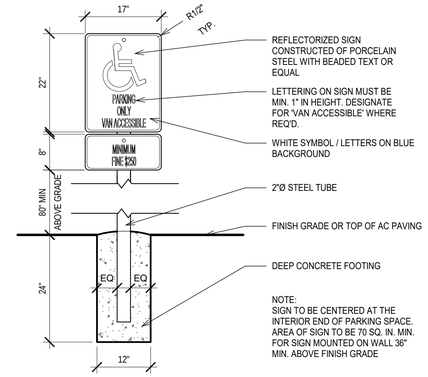

2 ACCESS - parking stall sign
3/4" = 1'-0"

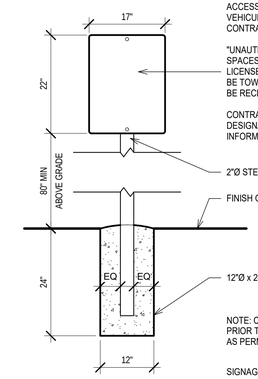

ACCESSIBLE WARNING SIGNAGE TO BE POSTED AT ALL VEHICULAR ENTRANCES, WITH MIN 1" LETTERING ON CONTRASTING BACKGROUND TO READ:

"UNAUTHORIZED VEHICLES PARKED IN DESIGNATED ACCESSIBLE SPACES NOT DISPLAYING DISTINGUISHING PLACARDS OR SPECIAL LICENSE PLATES ISSUED FOR PERSONS WITH DISABILITIES WILL BE TOWED AWAY AT OWNER'S EXPENSE. TOWED VEHICLES MAY BE RECLAIMED AT ..... OR BY TELEPHONING ....."

CONTRACTOR TO VERIFY WITH JUURISDICTION TO OBTAIN LOCAL DESIGNATED TOWING SERVICE INFOMATION, AND INCLUDE THIS INFORMATION ON SIGN

1 ACCESS - parking lot entrance
3/4" = 1'-0"

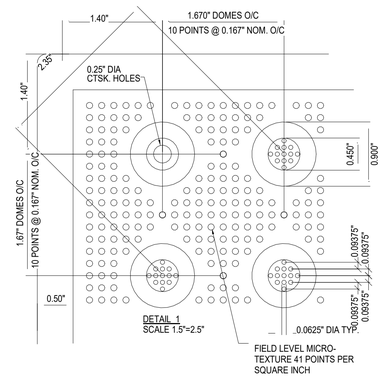

DETAIL 1
SCALE 1.5"=2.5"

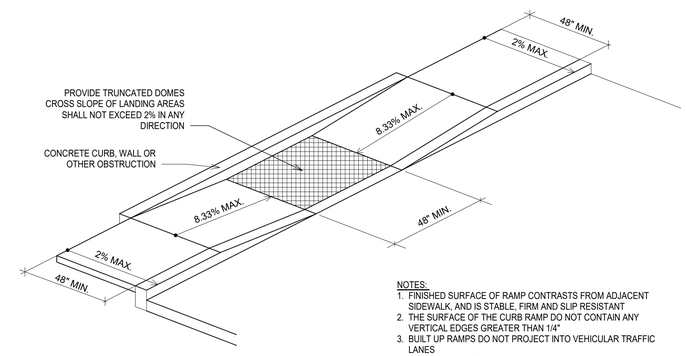

NOTES:
1. FINISHED SURFACE OF RAMP CONTRASTS FROM ADJACENT SIDEWALK, AND IS STABLE, FIRM AND SLIP RESISTANT
2. THE SURFACE OF THE CURB RAMP DO NOT CONTAIN ANY VERTICAL EDGES GREATER THAN 1/4"
3. BUILT UP RAMPS DO NOT PROJECT INTO VEHICULAR TRAFFIC LANES
4. TRANSITIONS FROM RAMP(S) TO WALKS, GUTTERS OR STREETS ARE FLUSH AND FREE OF ABRUPT CHANGES.

6 ACCESS - curb ramp
1/4" = 1'-0"

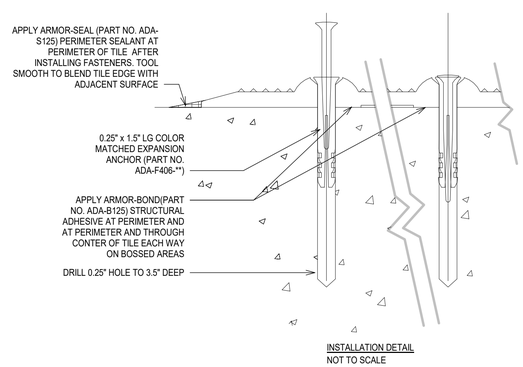

INSTALLATION DETAIL
NOT TO SCALE

9 ACCESS - truncated dome paver
1 1/2" = 1'-0"

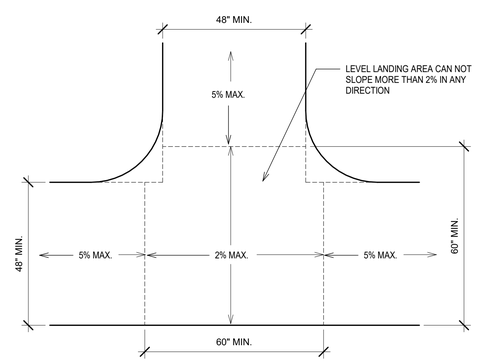

7 ACCESS - landing at walkway intersection
1/2" = 1'-0"

LAUTERBACH & ASSOCIATES
ARCHITECTS • INC.
David C. Kesterson, Architect • Ilona Scott, Architect • Mark S. Pettit, Architect
300 MONTGOMERY AVENUE, OXNARD, CALIFORNIA 93036 | 805-988-0912 | FAX 805-981-4510 | www.la-arch.com

LICENSED ARCHITECT ILONA SCOTT No. C11881 Ren. 06/21 STATE OF CALIFORNIA

FASHION PARK APARTMENTS
234, 251 & 257 FASHION PARK
OXNARD, CA, 93036

CITY OF OXNARD HOUSING AUTHORITY
435 S. D STREET
OXNARD, CALIFORNIA 93030

NO	DESCRIPTION	DATE
1	PI ch submittal	04/08/2020

ISSUE

JOB NO. 20-190709

DRAWN BY: TJL
CHECKED BY: ISS
PROJECT MANAGER: ISS
PRINT DATE: 4/8/2020 2:57:41 AM

SITE DETAILS

A-501

THESE DRAWINGS AND SPECIFICATIONS ARE THE PROPERTY AND COPYRIGHT OF LAUTERBACH & ASSOCIATES. ALL RIGHTS RESERVED, AND SHALL NOT BE USED ON ANY OTHER WORK OR PROJECT EXCEPT BY WRITTEN AGREEMENT WITH LAUTERBACH & ASSOCIATES. WRITTEN DIMENSIONS SHALL TAKE PRECEDENCE OVER SCALED DIMENSIONS AND SHALL BE VERIFIED ON THE JOB SITE. ANY DISCREPANCY SHALL BE BROUGHT TO THE NOTICE OF LAUTERBACH & ASSOCIATES PRIOR TO COMMENCEMENT OF ANY WORK.

G:\2019 Projects\20-190709 City of Oxnard-Set 4-Fashion\Drawings\Architectural\20-190709 City of Oxnard - 234, 251, & 257 Fashion Park Apartments - CD.rvt

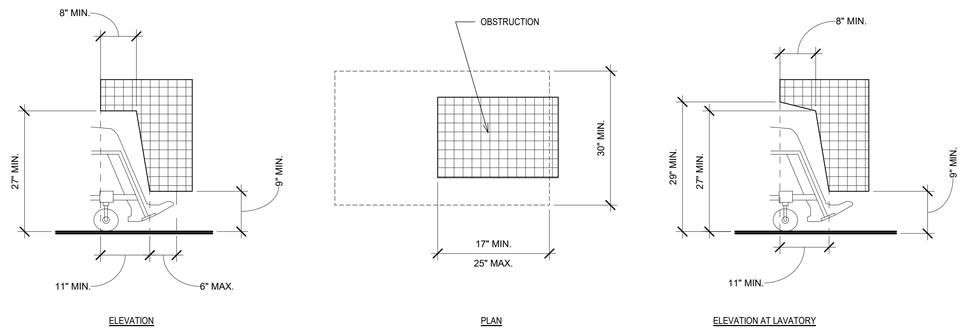

2 ACCESS - knee and toe space
3/4" = 1'-0"

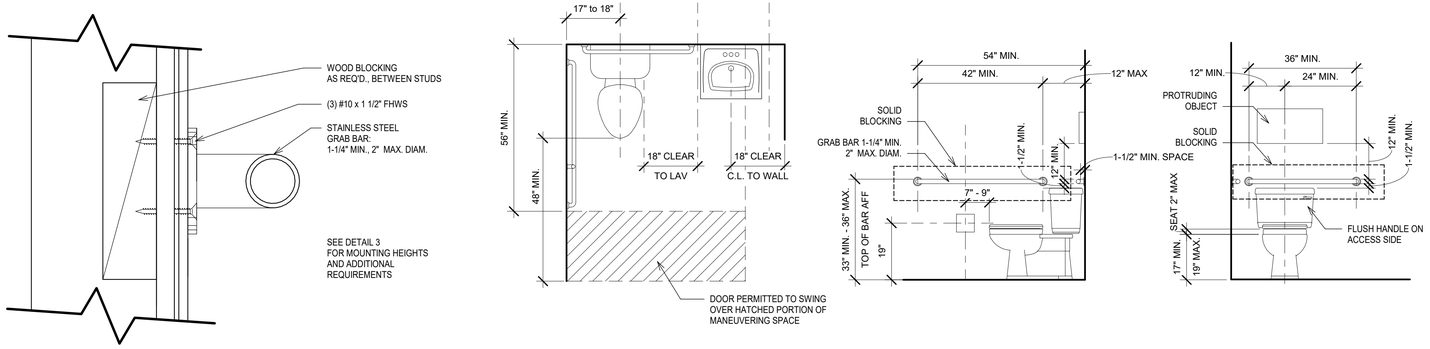

4 ACCESS - grab bar mounting
6" = 1'-0"

3 ACCESS - typical restroom
1/2" = 1'-0"

NOTES:

1. CONSTRUCTION MUST COMPLY WITH CALIFORNIA TITLE 24 REQUIREMENTS
2. THE REQUIRED CLEARANCE AROUND THE WATER CLOSET SHALL BE PERMITTED TO OVERLAP THE WATER CLOSET, ASSOCIATED GRAB BARS, DISPENSERS, SANITARY NAPKIN DISPOSAL UNITS, COAT HOOKS, SHELVES, ACCESSIBLE ROUTES, CLEAR FLOOR SPACE AND CLEARANCES REQUIRED AT OTHER FIXTURES, AND THE TURNING SPACE. NO OTHER FIXTURES OR OBSTRUCTIONS SHALL BE LOCATED WITHIN THE REQUIRED WATER CLOSET CLEARANCE.
3. SEATS SHALL NOT BE SPRUNG TO RETURN TO A LIFTED POSITION
4. THE REAR GRAB BAR SHALL BE PERMITTED TO BE 24 INCHES LONG MINIMUM, CENTERED ON THE WATER CLOSET, WHERE WALL SPACE DOES NOT PERMIT A LENGTH OF 36 INCHES MINIMUM DUE TO THE LOCATION OF A RECESSED FIXTURE ADJACENT TO THE WATER CLOSET.
5. FLUSH CONTROLS SHALL BE HAND OPERATED OR AUTOMATIC. CONTROLS SHALL BE LOCATED 44 INCHES MAXIMUM ABOVE THE FLOOR.
6. TOILET PAPER DISPENSERS SHALL NOT BE OF A TYPE THAT CONTROLS DELIVERY OR THAT DOES NOT ALLOW CONTINUOUS PAPER FLOW.

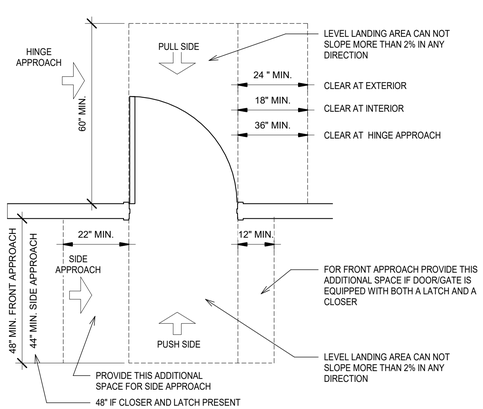

7 ACCESS - door clearances
1/2" = 1'-0"

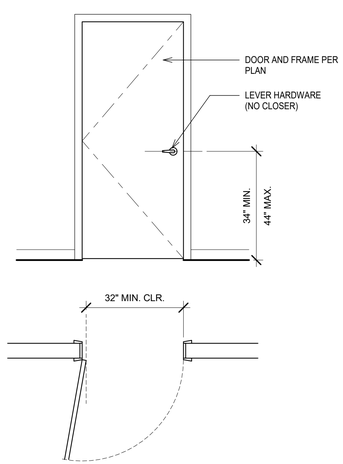

6 ACCESS - interior door clearances
1/2" = 1'-0"

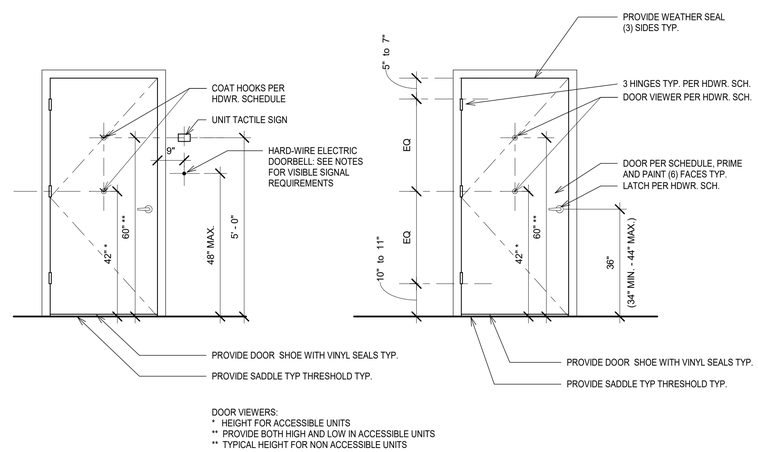

DOOR VIEWERS:
* HEIGHT FOR ACCESSIBLE UNITS
** PROVIDE BOTH HIGH AND LOW IN ACCESSIBLE UNITS
** TYPICAL HEIGHT FOR NON ACCESSIBLE UNITS

5 DOOR - typical door requirements
1/2" = 1'-0"

GENERAL NOTES:

1. HARDWARE. DOOR HANDLES, PULLS, LATCHE3S, LOCKS AND OTHER OPERATING DEVICES ON DOORS REQUIRED TO BE ACCESSIBLE SHALL NOT REQUIRE TIGHT GRASPING TIGHT PINCHING OR TWISTING OF THE WRIST TO OPERATE. (1008.1.9.1)
2. DOOR CLOSERS AND GATE CLOSERS SHALL BE ADJUSTED SO THAT FROM AN OPEN POSITION OF 90 DEGREES, THE TIME REQUIRED TO MOVE THE DOOR TO A POSITION OF 12 DEGREES FROM THE LATCH IS 5 SECONDS MINIMUM. (11B-404.2.8)
3. DOOR AND GATE SPRING HINGES SHALL BE ADJUSTED SO THAT FROM THE OPEN POSITION OF 70 DEGREES, THE DOOR OR GATE SHALL MOVE TO THE CLOSED POSITION IN 1.5 SECONDS MINIMUM.
4. THE FORCE FOR PUSHING OR PULLING A OPEN DOOR OR GATE OTHER THAN A FIRE DOOR SHALL BE AS FOLLOWS:
   a. INTERIOR HINGED DOORS AND GATES: 5 POUNDS MAXIMUM.
   b. SLIDING OR FOLDING DOORS: 5 POUNDS MAXIMUM.
   c. REQUIRED FIRE DOORS: THE MINIMUM OPENING FORCE ALLOWABLE BY THE APPROPRIATE ADMINISTRATIVE AUTHORITY, NOT TO EXCEED 15 POUNDS
   d. EXTERIOR HINGED DOORS: 5 POUNDS MAXIMUM
5. SWING DOOR AND GATE SURFACES WITHIN 10 INCHES OF THE FINISH FLOOR OR GROUND MEASURED VERTICALLY SHALL HAVE A SMOOTH SURFACE ON THE PUSH SIDE EXTENDING THE FULL WIDTH OF THE DOOR OR GATE. PARTS CREATING HORIZONTAL OR VERTICAL JOINTS IN THESE SURFACES SHALL BE WITHIN 1/16 INCH OF THE SAME PLANE AS THE OTHER AND BE FREE OF SHARP OR ABRASIVE EDGES. CAVITIES CREATED BY ADDED KICK PLATES SHALL BE CAPPED.
6. DOORS, GATES, AND SIDE LIGHTS ADJACENT TO DOORS OR GAT4ES, CONTAINING ONE OR MORE GLAZING PANELS THAT PERMIT VIEWING THROUGH THE PANELS SHALL HAVE THE BOTTOM OF AT LEAST ONE GLAZED PANEL LOCATED 43 INCHES MAXIMUM ABOVE THE FINISH FLOOR.
   a. EXCEPTION: GLAZING PANELS WITH THE LOWEST PART MORE THAN 86 INCHES FROM THE FINISH FLOOR OR GROUND SHALL NOT BE REQUIRED TO COMPLY.
7. DOORWAYS SHALL PROVIDE A CLEAR OPENING OF 32 INCHE3S MINIMUM IN POWER-ON AND POWER-OFF MODE. THE MINIMUM CLEAR WIDTH FOR AUTOMATIC DOOR SYSTEMS IN A DOORWAY SHALL PROVIDE A CLEAR, UNOBSTRUCTED OPENING OF 32 INCHES WITH ONE LEAF POSITIONED AT AN ANGLE OF 90 DEGREES FROM ITS CLOSED POSITION.

LAUTERBACH & ASSOCIATES
ARCHITECTS INC.
David C. Kesterson, Architect • Ilona Scott, Architect • Mark S. Pettit, Architect
300 MONTGOMERY AVENUE, OXNARD, CALIFORNIA 93036 | 805-988-0912 | FAX 805-981-4510 | www.la-arch.com

LICENSED ARCHITECT
ILONA SCOTT
No. C11881
Ren. 06/21
STATE OF CALIFORNIA

FASHION PARK APARTMENTS

234, 251 & 257 FASHION PARK
OXNARD, CA, 93036

CITY OF OXNARD HOUSING AUTHORITY

435 S. D STREET
OXNARD, CALIFORNIA 93030

NO	DESCRIPTION	DATE
1	PI ch submittal	04/08/2020

ISSUE

JOB NO. 20-190709

DRAWN BY: TJL
CHECKED BY: ISS
PROJECT MANAGER: ISS
PRINT DATE: 4/8/2020 2:56:05 AM

ACCESSIBLE DETAILS

A-502

THESE DRAWINGS AND SPECIFICATIONS ARE THE PROPERTY AND COPYRIGHT OF LAUTERBACH & ASSOCIATES. ALL RIGHTS RESERVED, AND SHALL NOT BE USED ON ANY OTHER WORK OR PROJECT EXCEPT BY WRITTEN AGREEMENT WITH LAUTERBACH & ASSOCIATES. WRITTEN DIMENSIONS SHALL TAKE PRECEDENCE OVER SCALED DIMENSIONS AND SHALL BE VERIFIED ON THE JOB SITE. ANY DISCREPANCY SHALL BE BROUGHT TO THE NOTICE OF LAUTERBACH & ASSOCIATES PRIOR TO COMMENCEMENT OF ANY WORK.

G:\2019 Projects\20-190709 City of Oxnard Set 4-Fashion\Drawings\Architectural\20-190709 City of Oxnard - 234, 251, & 257 Fashion Park Apartments - CD.rvt

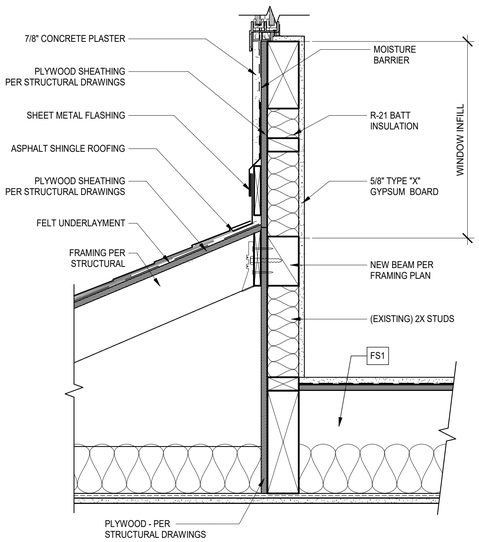

14 ROOF AT FIRST FLOOR ADDITION1
1 1/2" = 1'-0"

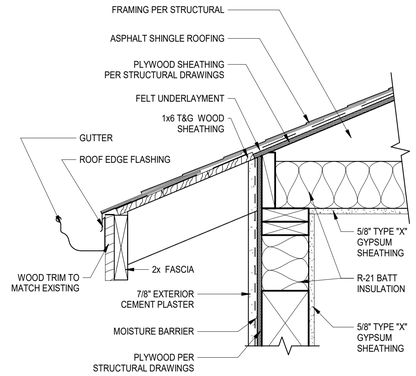

10 ROOF EAVE AT EXTERIOR NEW WALL1
1 1/2" = 1'-0"

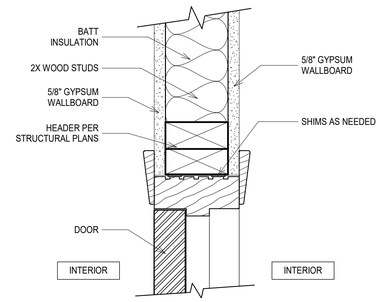

7 DOOR HEAD - INTERIOR
3" = 1'-0"

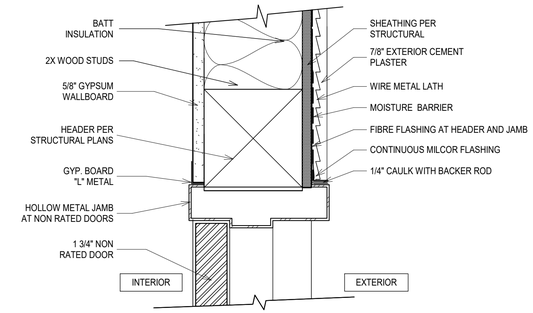

4 DOOR HEAD - EXTERIOR AT WATER HEATER ENCLOSURE
3" = 1'-0"

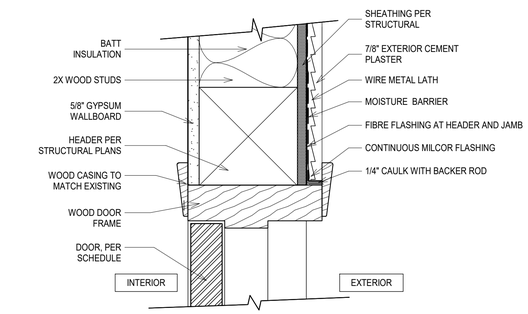

3 DOOR HEAD - EXTERIOR ENTRANCE
3" = 1'-0"

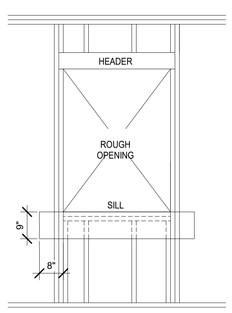

A

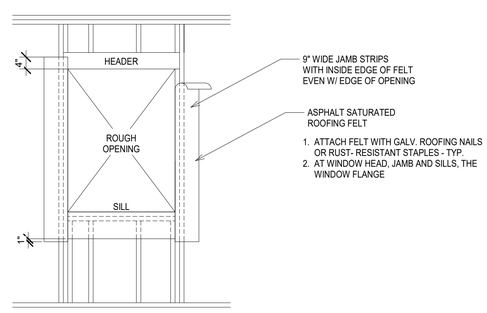

B

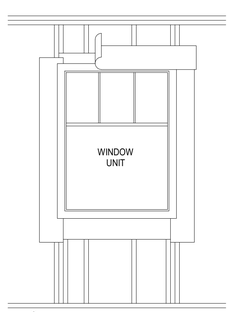

C

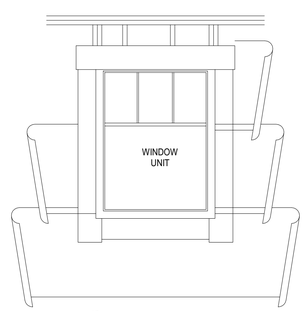

D

APPLY CAULK BEAD TO THE BACK SURFACE OF WINDOW. INSTALL OVER FELT STRIPS- INSTALL 9" WIDE FELT HEAD FLASHING OVER TOP FLANGE.

STARTING AT BOTTOM OF WALL LAY WATER RESISTANT PAPER UNDER THE SILL STRIP- INSTALL SUCCEEDING COURSES OF WATER-RESISTANT PAPER OVER SILL, JAMB, AND HEAD FLANGE IN SHINGLE FASHION W/ MIN. 2" OVERLAPS.

12 WINDOWS - TYPICAL FLASHINGS
1/2" = 1'-0"

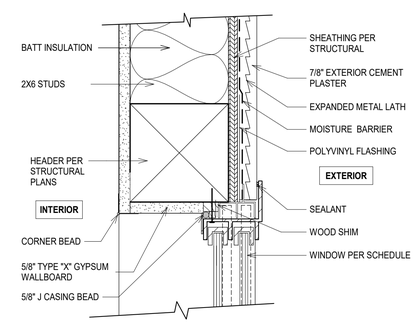

6 WINDOW HEAD - EXTERIOR CEMENT PLASTER
3" = 1'-0"

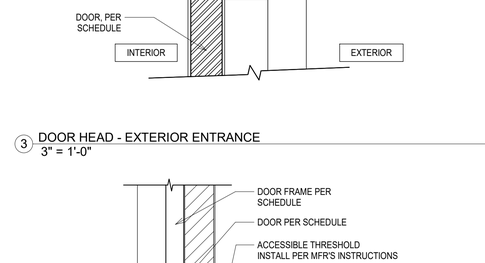

2 DOOR - INTERIOR ACCESSIBLE THRESHOLD
3" = 1'-0"

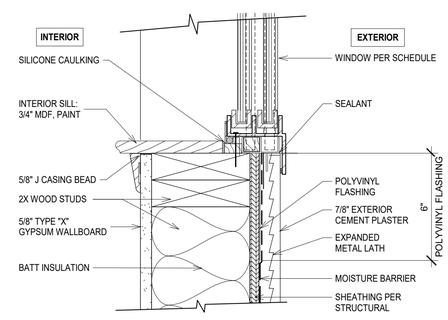

5 WINDOW SILL - EXTERIOR CEMENT PLASTER
3" = 1'-0"

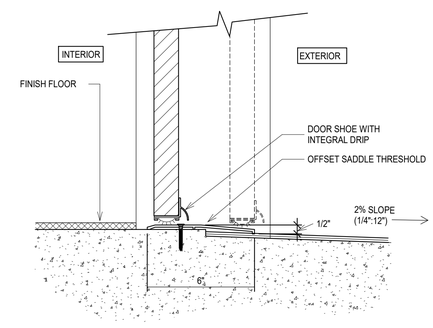

1 DOOR THRESHOLD - ACCESSIBLE (AT SLAB ON GRADE)
3" = 1'-0"

LAUTERBACH & ASSOCIATES
A R C H I T E C T S • I N C.
David C. Kesterson, Architect • Ilona Scott, Architect • Mark S. Pettit, Architect
300 MONTGOMERY AVENUE, OXNARD, CALIFORNIA 93036 | 805-988-0912 | FAX 805-981-4510 | www.la-arch.com

LICENSED ARCHITECT ILONA SCOTT No. C11881 Ren. 06/21 STATE OF CALIFORNIA

FASHION PARK APARTMENTS

234, 251 & 257 FASHION PARK
OXNARD, CA, 93036

CITY OF OXNARD HOUSING AUTHORITY

435 S. D STREET
OXNARD, CALIFORNIA 93030

NO	DESCRIPTION	DATE
1	PI ch submittal	04/08/2020

ISSUE

JOB NO. 20-190709

DRAWN BY: TJL
CHECKED BY: ISS
PROJECT MANAGER: ISS
PRINT DATE: 4/8/2020 2:55:11 AM

ROOF, DOOR & WINDOW DETAILS

A-503

THESE DRAWINGS AND SPECIFICATIONS ARE THE PROPERTY AND COPYRIGHT OF LAUTERBACH & ASSOCIATES. ALL RIGHTS RESERVED, AND SHALL NOT BE USED ON ANY OTHER WORK OR PROJECT EXCEPT BY WRITTEN AGREEMENT WITH LAUTERBACH & ASSOCIATES. WRITTEN DIMENSIONS SHALL TAKE PRECEDENCE OVER SCALED DIMENSIONS AND SHALL BE VERIFIED ON THE JOB SITE. ANY DISCREPANCY SHALL BE BROUGHT TO THE NOTICE OF LAUTERBACH & ASSOCIATES PRIOR TO COMMENCEMENT OF ANY WORK.

G:\2019 Projects\20-190709 City of Oxnard-Sec 4-Fashion\Drawings\Architectural\20-190709 City of Oxnard - 234, 251, & 257 Fashion Park Apartments - CD.rvt

DOOR SCHEDULE - RESIDENTIAL

ROOM	DOOR	WIDTH	HEIGHT	THICKNESS	TYPE	MATERIAL	FINISH	FRAME TYPE	COMMENTS
ENTRY - LIVING ROOM	100	3' - 0"	6' - 8"	0' - 1 3/4"	A	Wood	Paint	Wood	
BATHROOM	102	3' - 0"	6' - 8"	0' - 1 3/4"	B	Wood	Paint	Wood	
BEDROOM	103	3' - 0"	6' - 8"	0' - 1 3/4"	B	Wood	Paint	Wood	
BEDROOM CLOSET	103A	4' - 11"	6' - 8"		C	Wood	Paint	Wood	
ENTRY - LIVING ROOM	106	3' - 0"	6' - 8"	0' - 1 3/4"	A	Wood	Paint	Wood	
FURNACE	107B	1' - 10"	5' - 4"	0' - 1 3/4"	E	Wood	Paint	Wood	
ENCLOSURE	112	3' - 0"	6' - 8"	0' - 1 3/4"	D	Metal	Paint	Metal	

WINDOW SCHEDULE

MARK	WIDTH	HEIGHT	HEAD HEIGHT	WINDOW TYPE	U-VALUE	SOLAR HEAT GAIN COEFFICIENT	Comments
A	3' - 10"	5' - 10"		Vinyl Windows	0.3	0.23	
B	3' - 10"	4' - 0"		Vinyl Windows	0.3	0.23	

ROOM FINISH SCHEDULE

NUMBER	NAME	AREA	FLOOR FINISH	BASE FINISH	WALL FINISH	CEILING FINISH	COMMENTS
100	LIVING ROOM	112 SF	SV.1		GB-Paint	GB-Paint	
101	KITCHEN	111 SF	SV.1		GB-Paint	GB-Paint	
102	BATHROOM	78 SF	SV.1		GB-Paint	GB-Paint	
103	BEDROOM	121 SF	SV.1		GB-Paint	GB-Paint	
104	ENTRY	30 SF	SV.1		GB-Paint	GB-Paint	
105	VESTIBULE	41 SF	SV.1		GB-Paint	GB-Paint	
106	CLOSET	5 SF			GB-Paint	GB-Paint	
107	DINING ROOM	143 SF	SV.1		GB-Paint	GB-Paint	
108	KITCHEN	76 SF	SV.1		GB-Paint	GB-Paint	
109	PANTRY	12 SF	SV.1		GB-Paint	GB-Paint	
110	LAUNDRY	55 SF	SV.1		GB-Paint	GB-Paint	
111	STAIR	43 SF			GB-Paint	GB-Paint	
112	HEATER ENCLOSURE	10 SF					
201	VESTIBULE	45 SF	SV.1		GB-Paint	(E)	
202	BATHROOM	42 SF	SV.1		(E)	(E)	(E) CLEAN AND PAINT ONLY
203	BEDROOM 2	118 SF	SV.1		GB-Paint	(E)	
204	BEDROOM 1	139 SF	SV.1		GB-Paint	(E)	
205	LIVING ROOM	245 SF	SV.1		GB-Paint	GB-Paint	

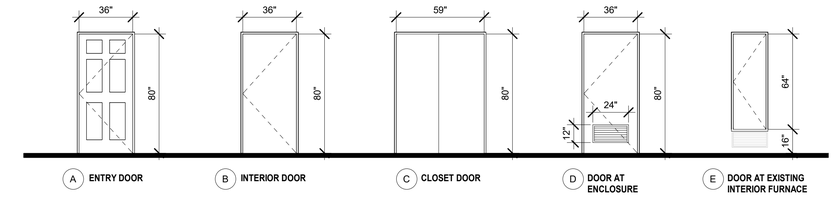

Door Legend
1/4" = 1'-0"

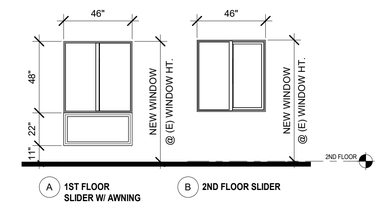

Window Legend
1/4" = 1'-0"

APPLIANCE AND FIXTURE SCHEDULE

ALL APPLIANCES IN ACCESSIBLE UNITS ARE ACCESS COMPLIANT ("ADA"), ALL APPLIANCES ARE ENERGY STAR RATED

- REFRIGERATOR - LG - 26.2 CU. FT. SIDE BY SIDE W/ WATER DISPENSER
  MODEL: LSCS26326D OR SIMILAR
- OVEN - LG - 6.3 CU. FT. STAINLESS STEEL GAS RANGE WITH CONVECTION
  MODEL: LSG4513ST OR SIMILAR
- FIBERGLASS TUB-SHOWER - FREEDOM BATHTUBS 60" x 32.5" ADA
  MODEL: APTG3260TSADA
- TOILET - AMERICAN STANDARD CADET TALL HEIGHT
  MODEL: 3376128ST.020
- BATHROOM SINK - AMERICAN STANDARD - MURRO UNIVERSAL DESIGN
  WALL MOUNTED
  MODEL: 0954.004EC.020 OR SIMILAR
- KITCHEN SINK - MOEN STAINLESS STEEL UNDER-MOUNT DOUBLE BOWL SINK
  MODEL: G18215 OR SIMILAR

LAUTERBACH & ASSOCIATES
ARCHITECTS INC.
David C. Kesterson, Architect • Ilona Scott, Architect • Mark S. Pettit, Architect
300 MONTGOMERY AVENUE, OXNARD, CALIFORNIA 93036 | 805-988-0912 | FAX 805-981-4510 | www.la-arch.com

LICENSED ARCHITECT
ILONA SCOTT
No. C11881
Ren. 06/21
STATE OF CALIFORNIA

FASHION PARK APARTMENTS

234, 251 & 257 FASHION PARK
OXNARD, CA, 93036

CITY OF OXNARD HOUSING AUTHORITY

435 S. D STREET
OXNARD, CALIFORNIA 93030

NO	DESCRIPTION	DATE
1	PI ch submittal	04/08/2020

ISSUE

JOB NO. 20-190709

DRAWN BY: TJL
CHECKED BY: ISS
PROJECT MANAGER: ISS
PRINT DATE: 4/8/2020 2:54:09 AM

SCHEDULES

A-601

THESE DRAWINGS AND SPECIFICATIONS ARE THE PROPERTY AND COPYRIGHT OF LAUTERBACH & ASSOCIATES. ALL RIGHTS RESERVED, AND SHALL NOT BE USED ON ANY OTHER WORK OR PROJECT EXCEPT BY WRITTEN AGREEMENT WITH LAUTERBACH & ASSOCIATES. WRITTEN DIMENSIONS SHALL TAKE PRECEDENCE OVER SCALED DIMENSIONS AND SHALL BE VERIFIED ON THE JOB SITE. ANY DISCREPANCY SHALL BE BROUGHT TO THE NOTICE OF LAUTERBACH & ASSOCIATES PRIOR TO COMMENCEMENT OF ANY WORK.

G:\2019 Projects\20-190709 City of Oxnard-Set 4-Fashion\Drawings\Architectural\20-190709 City of Oxnard - 234, 251, & 257 Fashion Park Apartments - CD.rvt

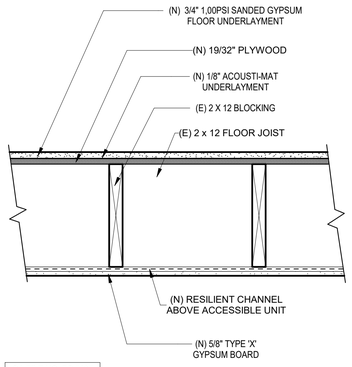

GA FILE NO. FC 5107

F.S.1

REMOVE EXISTING GYP BOARD CEILING AND FLOORING, INSTALL NEW GYP BOARD AND FLOORING FOR A 1 HR FIRE RATED, 50 STC SOUND RATING FLOOR ASSEMBLY

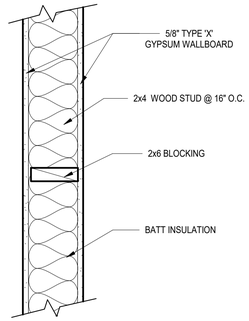

6

NEW INTERIOR 2x6 WALL AT HEATER

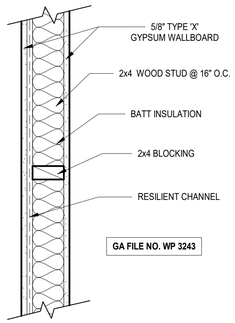

GA FILE NO. WP 3243

5

NEW INTERIOR 2x4 1 HOUR STC 50 SOUND RATED WALL

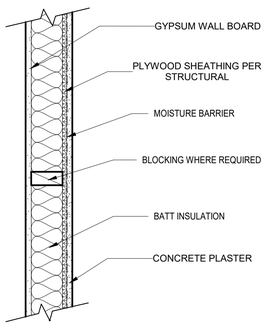

4

NEW EXTERIOR 2x4 WALL

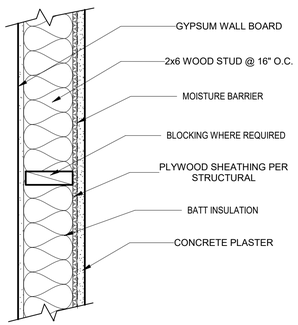

3

NEW EXTERIOR 2x6 WALL

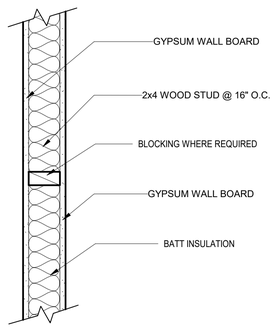

2

NEW INTERIOR 2x4 WALL

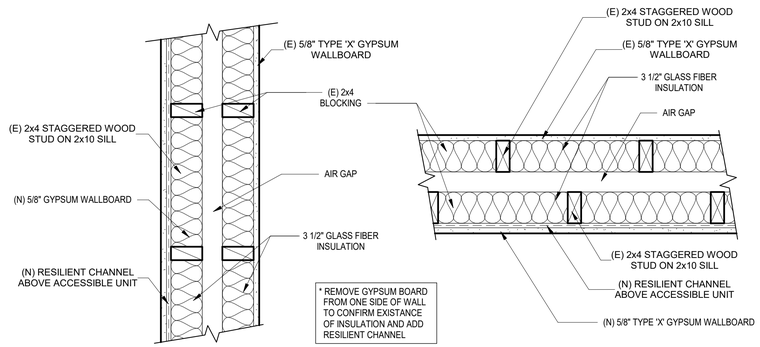

* REMOVE GYPSUM BOARD FROM ONE SIDE OF WALL TO CONFIRM EXISTANCE OF INSULATION AND ADD RESILIENT CHANNEL

GA FILE NO. WP 3112

1

(E) INTERIOR WALL MODIFIED TO COMPLY WITH 1 HOUR RATED 2x10 WALL WITH 50 STC SOUND RATING

WALL LEGEND
1 1/2" = 1'-0"

G:\2019 Projects\20-190709 City of Oxnard-Set 4-Fashion\Drawings\Architectural\20-190709 City of Oxnard - 234, 251, & 257 Fashion Park Apartments - CD.rvt

THESE DRAWINGS AND SPECIFICATIONS ARE THE PROPERTY AND COPYRIGHT OF LAUTERBACH & ASSOCIATES. ALL RIGHTS RESERVED, AND SHALL NOT BE USED ON ANY OTHER WORK OR PROJECT EXCEPT BY WRITTEN AGREEMENT WITH LAUTERBACH & ASSOCIATES. WRITTEN DIMENSIONS SHALL TAKE PRECEDENCE OVER SCALED DIMENSIONS AND SHALL BE VERIFIED ON THE JOB SITE. ANY DISCREPANCY SHALL BE BROUGHT TO THE NOTICE OF LAUTERBACH & ASSOCIATES PRIOR TO COMMENCEMENT OF ANY WORK.

LAUTERBACH & ASSOCIATES
ARCHITECTS INC.
David C. Kesterson, Architect • Ilona Scott, Architect • Mark S. Pettit, Architect
300 MONTGOMERY AVENUE, OXNARD, CALIFORNIA 93036 | 805-988-0912 | FAX 805-981-4510 | www.la-arch.com

LICENSED ARCHITECT
ILONA SCOTT
No. C11881
Ren. 06/21
STATE OF CALIFORNIA

FASHION PARK APARTMENTS

234, 251 & 257 FASHION PARK
OXNARD, CA, 93036

CITY OF OXNARD HOUSING AUTHORITY

435 S. D STREET
OXNARD, CALIFORNIA 93030

NO	DESCRIPTION	DATE
1	PI ch submittal	04/08/2020

ISSUE

JOB NO. 20-190709

DRAWN BY: TJL
CHECKED BY: ISS
PROJECT MANAGER: ISS
PRINT DATE: 4/8/2020 2:51:51 AM

WALL LEGEND

A-602

MANDATORY MEASURES

Maximum length of flexible duct and connectors shall not be more than 5 feet. Flexible ducts shall not be used in lieu of rigid elbows.

Sec 603.4.1

Each space-conditioning system shall be installed with controls that comply with the following:

1) Capable of automatically shutting off the system during periods of non-use and shall have:
   (1) An automatic time switch control device complying with Sec. 110.9, with an accessible manual override that allows operation of the system for up to 4 hours; or
   (2) An occupancy sensor; or
   (3) A four-hour timer that can be manually operated.
   EXCEPTION: Mechanical systems serving retail stores and associated malls, restaurants, grocery stores, churches, and theaters equipped with 7-day programmable timers.
2) Automatically restart and temporarily operate the system as required to maintain:
   (1) A setback heating thermostat set point, if the system provides mechanical heating;
   EXCEPTION: Area with the design winter outdoor temperature of greater than 32° F.
   (2) A setup cooling thermostat set point, if the system provides mechanical cooling.
   EXCEPTION: Area with the design summer outdoor temperature of less than 100°F.
3) Multipurpose room less than 1000 ft², classrooms greater than 750 ft² and conference, convention, auditorium and meeting center rooms greater than 750 ft² that do not have processes or operations that generate dusts, fumes, vapors or gasses shall be equipped with occupant sensor(s) to accomplish the following during unoccupied periods:
   (1) Automatically setup the operating cooling temperature set point by 2°F or more and setback the operating heating temperature set point by 2°F or more; and
   (2) Automatically reset the minimum required ventilation rate with an occupant sensor ventilation control device according to Section 120.1(c)5.

Exception to Sections 120.2(e)3: If Demand Control Ventilation is implemented as required by Section 120.1(c)3 and 120.1(4).

Sec. 120.2 (e)

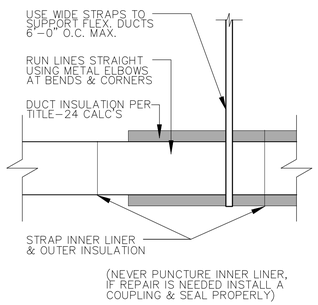

1 FLEX DUCT SUPPORT

SCALE: N.T.S.

EQUIPMENT SCHEDULE

UNIT	TONS	MODEL	COOLING (BTUH)	AFUE	HEATING (BTUH)	CFM	MCA	MOCP	VOLTAGE	WEIGHT (LB.)	LIQUID LINE	VAPOR LINE	REMARKS
FAU-1		CARRIER #59TP5A080E17--16		96.2	78,000 / 50,000	1,360	GAS	GAS	115V 1P 60Hz	156			VERTICAL. PROVIDE DUCT SMOKE DETECTOR
SH-1	2.0 T	WILLAMS COMFORT #3509622A		.81 AFUE	23,700	110 - 162	GAS	GAS	120V 1P 60Hz	57			WALL MOUNTED UNIT
EF-1		PANASONIC FV-10VS1				100	0.2	20	120V	20			INTEGRAL BACKDRAFT DAMPER. INTERLOCK W/ HUMIDISTAT SWITCH

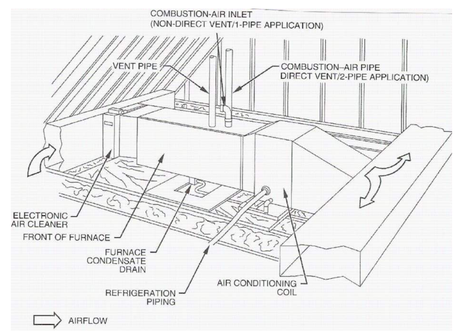

1. Provide an attic access a minimum of 22"x30" not over 20' from the equipment.
2. Provide an unobstructed passageway 30" wide x 30" high with solid continuous flooring from the access to the equipment/control panel. The passageway shall be at least as large as the largest component of the appliance. Provide a level, unobstructed work platform not less than 30"X30" square in front of the equipment with 30" headroom. [§305 CMC]
3. Provide a 120V receptacle and a light near the equipment. The light switch shall be located at the attic access.
4. Provide a 3/4" primary condensate drain. Provide a 3/4" secondary condensate drain line which terminates over a window.
5. All combustion air openings, including attic vents, shall be covered with a corrosion resistant screen with a 1/4" mesh.
6. Solid and liquid lines shall be located a minimum of 6" above the flood level rim of the condensing units.
7. See detail 2/- for equipment support.

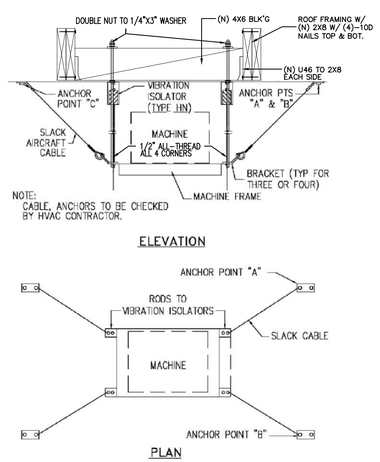

2 EQUIPMENT SUPPORT

SCALE: N.T.S.

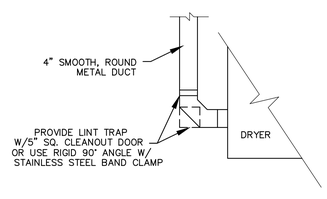

1 VERTICAL DRYER VENT CLEANOUT

SCALE: N.T.S.

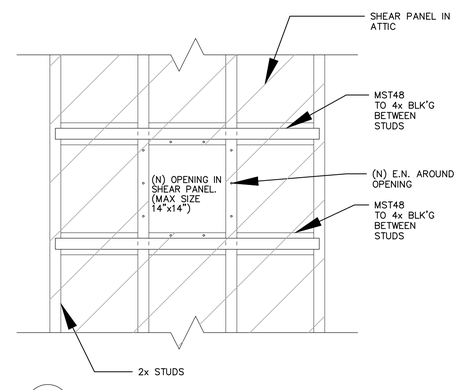

1 DUCT PENETRATIONS

SCALE: N.T.S.

MECHANICAL NOTES

1. All work shall be in accordance and comply with the latest applicable city ordinance and the 2019 CMC.

2. It is the intent of these drawings that this be a complete mechanical installation. Any apparent errors shall be brought to the attention of the designer and/or tenant prior to proceeding.

3. Contractor shall verify all existing conditions versus new installations to assure proper new installations can be completed properly prior to proceeding.

4. These plans shall be used only after approvals and permits have been secured by the proper jurisdiction of the department of building and safety.

5. All drawings and details are provided as a diagrammatic version of the proposed work. The contractor shall be held liable and responsible for all field verifications of equipment, materials, and installations.

6. Contractor shall verify all equipment is installed in accordance with manufacturer's recommendations and local code requirements prior to any installations.

7. All duct work shall be provided, installed, sealed, and insulated per chapter 6 of the 2019 CMC and SMACNA HVAC Duct Construction Standards.

8. Means for interrupting the electrical supply to the air conditioning equipment and to its associated cooling tower shall be provided within sight of and not over 50 ft. from the air-conditioner and cooling tower. [§903.7 CMC]

9. All controls shall be from 36" to 48" AFF max and within sight of the fixtures.

10. Penetrations of fire-resistive walls, floor-ceilings and roof ceilings shall be protected as required in CBC Sections 712.3 & 712.4.

11. Contractor doing the mechanical work is responsible for verifying in the field that the HVAC system is capable of providing the necessary minimum outside air volume.

12. Air balancing may be required and shall be performed by the mechanical contractor doing the work.

13. All OSA intakes and makeup air intakes shall be provided and installed a minimum of 10' away from plumbing, toilet, water closets, and all appliance venting. Intakes may be located 3' below said appliance venting.

14. The contractor shall be solely responsible for construction mean, methods, sequences, of construction and the safety of workmen. Comply with all OSHA regulations.

15. No piping, ductwork, controls, etc., shall be installed or routed above electrical panels and equipment or through elevator rooms or shafts.

16. The mechanical and electrical contractors shall coordinate the electrical characteristics of all mechanical equipment prior to ordering of equipment. No additional payment will be made for lack of contractor coordination of electrical characteristics.

17. All mechanical and electrical system components shall be routed tight to underside of structure and through joists or trusses where possible. Coordinate installation to preserve headroom, equipment access, and architectural clearances for finishes, including ceiling heights. Coordinate with all other trades and do not conflict with the architectural requirements for the finished construction. Provide offsets where required to coordinate with other trades.

18. Refer to architectural reflected ceiling plans for locations of all grilled and diffusers.

19. All equipment and materials shall be new, free of defects and U.L. listed/labeled.

20. All cutting and chasing of the building construction required for this work shall be by this contractor unless shown on architectural drawings and confirmed as to size and location prior to new construction. Cutting shall be in a neat and workmanlike manner.

21. Exact location of rooftop mechanical units shall be approved by the structural engineer of record. Mechanical contractor shall furnish and install all supplemental support steel for units and roof duct penetrations after approval of structural engineer of record.

22. Fabricate and erect all ductwork to ASHRAE and SMACNA standards from #1 galvanized steel.

23. All ductwork in areas without ceilings that is to be painted shall be provided with paint grip finish. Comply with SMACNA standards and NFPA bulletin 90A requirements.

24. Ductwork shall be SMACNA low pressure construction 2" static pressure rating with Seal Class B seams and joints.

25. Flexible ducts shall be independently supported from the structure and connected with plastic drawbands tightened with manufacturer's tool. Flexible ducts are not permitted in rooms without ceilings. Flexible ducts shall be ATCO rubber type 070, 1 ½" insulation and rated at 10" W.C. for sizes through 12", UL listed, and meet 25/50 flame and smoke test. No interior color other than black is permitted for flexible ducts. Equivalent by Valuflex, Flexaire, Flexible Technologies, Thermaflex, or Genflex.

26. Include all turning veins, manual dampers, flexible connectors, grills and diffusers, acoustic lining, and other sheet metal accessories for the project. Volume dampers to be of opposed blade construction with locking quadrants. Provide volume dampers at supply air runouts to all ceiling diffusers.

27. All branch connection fittings in rectangular ductwork shall be 45 AVPree transition type, conical fittings, or spin-in fittings with integral air scoops. Butt fittings are not acceptable.

28. Acoustic line all rectangular ducts indicated on drawings with minimum 1" thick non-flaking, coated medium density liner. Apply to manufacturer's recommendations. Duct dimensions are outside dimensions, and include acoustic lining.

29. Provide curbs for all roof openings for ducts, flues, piping, and equipment. Curbs shall be furnished as accessories to the equipment or 8" high plate or equal equipment supports spanning structure and flashed into roofing. Roof curbs shall be compatible with roofing system and shall match roof flashing, and patching of roof shall be by a certified roofing contractor approved by the owner/tenant and paid for by the mechanical contractor.

30. All rigid round ductwork to be internally insulated.

31. From each air conditioning unit, install 4" deep trapped condensate drain with cleanout and terminate as shown on plans.

32. HVAC contractor to furnish all HVAC equipment indicated and/or scheduled on the drawings complete with bases, insulators, supports, and other required accessories.

33. Completely install equipment and place in proper operation per manufacturer's recommendations, lubricate and adjust as required. Furnish and install clean set of filters prior to balancing.

34. Equipment to be make and model as scheduled unless owner approved, equivalent quality and performance equipment is submitted as substitution. All substitutions subject to acceptance without qualification by owner/tenant and design engineer.

35. Furnish and install all controls for HVAC systems. Provide all relays and devices required for complete operation. Mount all controls furnished as accessories to equipment and provide all control wiring or power wiring required for control system where not specifically shown on electrical plans. All exposed wiring shall be in EMT conduit per CEC. Concealed wiring in ceiling plenums may be UL listed plenum rated cable neatly supported in wirings.

36. No thermostat shall be installed above any heat producing equipment.

37. Supports and hangers are to be provided to properly support, secure and align ductwork and to meet conditions. Provide seismic bracing for hangers and supports supporting ductwork. Comply with the latest edition of the Sheet Metal and Air Conditioning Contractors National Association Inc. (SMACNA) Seismic Restraint Manual as approved by ANSI.

38. At ducts to equipment, provide waterproof vent fabric flexible connections with a minimum of 6" full length, and approved by the AHJ. Where exposed to the outside, provide sun shield over the flexible connection.

39. Each rooftop AC unit and outdoor unit shall be mounted on freestanding spring type isolators with seismic restraints for lateral and vertical motion. Mounting shall be hot dipped galvanized.

40. Refrigerant piping to be Type "L" copper with brazed fittings using silver solder installed per the manufacturer's instructions for R-22 service. Piping shall be insulated with 1" thick insulation with all joints sealed with adhesive. Factory precharged piping may be used where length of run does not exceed 75'. Where insulation is exposed to weather it shall be covered with a jacket or protective/weather resistive paint which is a minimum of .016" thick.

41. Provide hangers and supports as required, straps and/or wire is unacceptable.

42. Coordinate work of this section with work of other sections to avoid conflicts. If required, provide shop drawings and submit to design engineer for approval.

43. Ensure that work of other sections is suitable to accommodate work of this section.

44. HVAC systems rated at 2000 cfm or greater shall be equipped with a duct smoke detector to automatically shut off the HVAC system if smoke is detected. The detectors shall be installed in the main supply duct downstream of any filters.

45. Condensate from cooling coils and overflow of evaporative coolers shall be collected and discharged to an approved plumbing fixture or disposal area. CMC Sec. 310.1.

46. Duct systems used with blower type equipment which are portions of a heating, cooling, absorption, evaporative cooling or outdoor air ventilation system shall be sized in accordance with Chapter 17 of the 2019 CMC.

THESE DRAWINGS AND SPECIFICATIONS ARE THE PROPERTY AND COPYRIGHT OF LAUTERBACH & ASSOCIATES. ALL RIGHTS RESERVED, AND SHALL NOT BE USED ON ANY OTHER WORK OR PROJECT EXCEPT BY WRITTEN AGREEMENT WITH LAUTERBACH & ASSOCIATES. WRITTEN DIMENSIONS SHALL TAKE PRECEDENCE OVER SCALED DIMENSIONS AND SHALL BE VERIFIED ON THE JOB SITE. ANY DISCREPANCY SHALL BE BROUGHT TO THE NOTICE OF LAUTERBACH & ASSOCIATES PRIOR TO COMMENCEMENT OF ANY WORK.

LAUTERBACH & ASSOCIATES
ARCHITECTS INC.
David C. Kesterson, Architect • Ilona Scott, Architect • Mark S. Pettit, Architect
300 MONTGOMERY AVENUE, OXNARD, CALIFORNIA 93036 | 805-988-0912 | FAX 805-981-4510 | www.la-arch.com

REGISTERED PROFESSIONAL ENGINEER SHANE DENNIS WINTER No. M34632 MECHANICAL STATE OF CALIFORNIA

REGISTERED PROFESSIONAL ENGINEER SHANE DENNIS WINTER No. C70691 CIVIL STATE OF CALIFORNIA

FASHION PARK APARTMENTS

234, 251 & 257 FASHION PARK
OXNARD, CA, 93036

CITY OF OXNARD HOUSING AUTHORITY

435 S. D STREET
OXNARD, CALIFORNIA 93030

NO	DESCRIPTION	DATE
1	SUBMIT	4/8/2020

ISSUE

JOB NO. 20-190709

DRAWN BY:
CHECKED BY:
PROJECT MANAGER:
PRINT DATE: 4/06/2020 8:36:51 AM

HVAC NOTES/ DETAILS

M-0.0

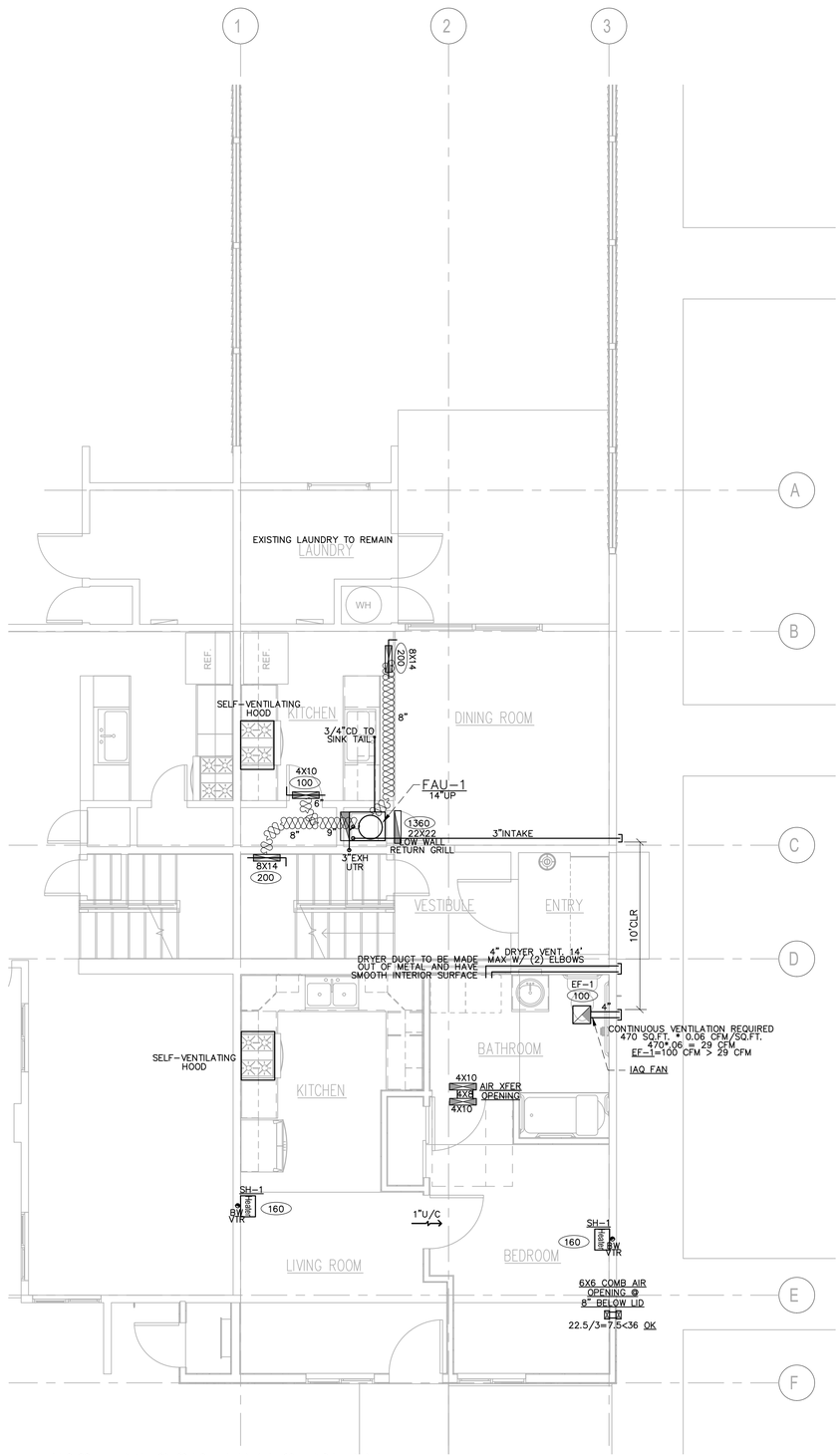

FIRST FLOOR HVAC PLAN

SCALE: 1/4":12"

HVAC LEGEND

- EXHAUST FAN – SEE SCHEDULE
- ##"X##" SUPPLY AIR REGISTER
- ##"X##" RETURN AIR REGISTER
- ### DESIGN CFM
- SD DUCT SMOKE DETECTOR
- VOLUME DAMPER
- POINT OF CONNECTION (VIF)
- ## 26 GA FLEXIBLE DUCT/DIAMETER PROVIDE R-6 INSULATION
- ## 26 GA EXPOSED RIGID DUCT/DIAMETER
- T DDC THERMOSTAT – WSHP#
- ## XXXXX DUCT ROUTING INSTRUCTION
- SHUT OFF VALVE

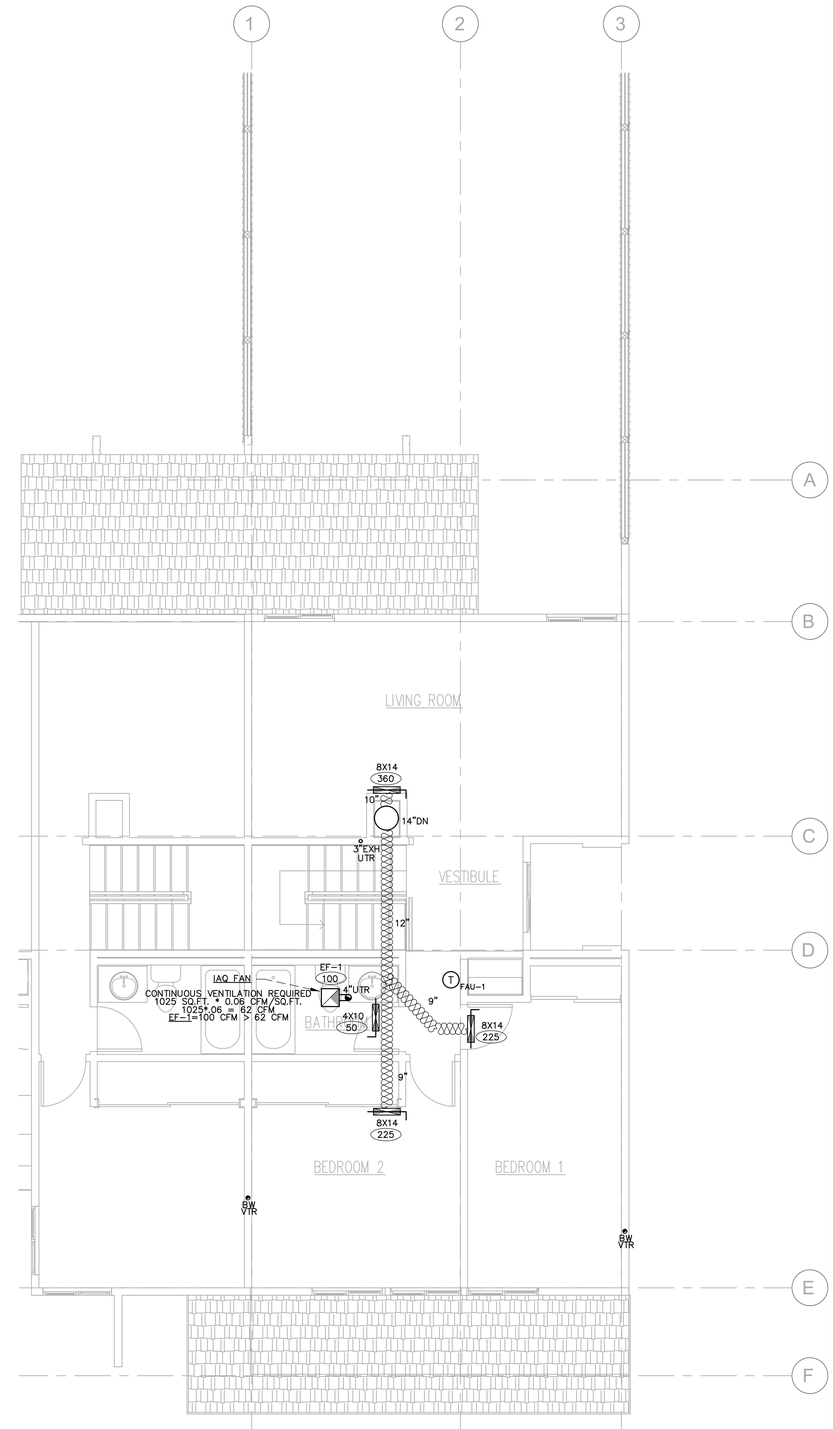

SECOND FLOOR HVAC PLAN

SCALE: 1/4":12"

THESE DRAWINGS AND SPECIFICATIONS ARE THE PROPERTY AND COPYRIGHT OF LAUTERBACH & ASSOCIATES. ALL RIGHTS RESERVED, AND SHALL NOT BE USED ON ANY OTHER WORK OR PROJECT EXCEPT BY WRITTEN AGREEMENT WITH LAUTERBACH & ASSOCIATES. WRITTEN DIMENSIONS SHALL TAKE PRECEDENCE OVER SCALED DIMENSIONS AND SHALL BE VERIFIED ON THE JOB SITE. ANY DISCREPANCY SHALL BE BROUGHT TO THE NOTICE OF LAUTERBACH & ASSOCIATES PRIOR TO COMMENCEMENT OF ANY WORK.

LAUTERBACH & ASSOCIATES
ARCHITECTS INC.
David C. Kesterson, Architect • Ilona Scott, Architect • Mark S. Pettit, Architect
300 MONTGOMERY AVENUE, OXNARD, CALIFORNIA 93036 | 805-988-0912 | FAX 805-981-4510 | www.la-arch.com

REGISTERED PROFESSIONAL ENGINEER SHANE DENNIS No. M24632 MECHANICAL STATE OF CALIFORNIA

REGISTERED PROFESSIONAL ENGINEER SHANE DENNIS No. C70891 CIVIL STATE OF CALIFORNIA

FASHION PARK APARTMENTS

234, 251 & 257 FASHION PARK
OXNARD, CA, 93036

CITY OF OXNARD HOUSING AUTHORITY

435 S. D STREET
OXNARD, CALIFORNIA 93030

NO	DESCRIPTION	DATE
1	SUBMIT	4/8/2020

ISSUE

JOB NO. 20-190209

DRAWN BY:
CHECKED BY:
PROJECT MANAGER:
PRINT DATE: 2/15/19 8:36:51 AM

HVAC PLAN

M-1.0

CERTIFICATE OF COMPLIANCE **CF1R-PRF-01E**

Project Name: 1-BR Apartment **Calculation Date/Time:** 2020-02-18T14:51:54-08:00 **(Page 1 of 8)**

Calculation Description: Title 24 Analysis **Input File Name:** 20-012 - FASHION PARK APARTMENTS - LAUTERBACH (1 Bedroom).ribd19x

GENERAL INFORMATION					
01	Project Name	1-BR Apartment			
02	Run Title	Title 24 Analysis			
03	Project Location	234 Fashion Park Place			
04	City	Oxnard	05	Standards Version	2019
06	Zip code	93033	07	Software Version	EnergyPro 8.0
08	Climate Zone	6	09	Front Orientation (deg/ Cardinal)	180
10	Building Type	SingleFamily	11	Number of Dwelling Units	1
12	Project Scope	AdditionAlteration	13	Number of Bedrooms	1
14	New Cond. Floor Area (ft^2)	0	15	Number of Stories	1
16	Existing Cond. Floor Area (ft^2)	472	17	Fenestration Average U-factor	0.3
18	Total Cond. Floor Area (ft^2)	472	19	Glazing Percentage (%)	10.17%
20	ADU Bedroom Count	0	21	ADU Conditioned Floor Area	0

COMPLIANCE RESULTS	
01	Building Complies with Computer Performance
02	This building incorporates features that require field testing and/or verification by a certified HERS rater under the supervision of a CEC-approved HERS provider.
03	This building incorporates one or more Special Features shown below

ENERGY USE SUMMARY				
Energy Use (kTD/ft^2-yr)	Standard Design	Proposed Design	Compliance Margin	Percent Improvement
Space Heating	8.16	4.68	3.48	42.6
Space Cooling	11.65	11.47	0.18	1.5
IAQ Ventilation	0	0	0	
Water Heating	37.71	38.03	-0.32	-0.8
Self Utilization Credit	n/a	0	0	n/a
Compliance Energy Total	**57.52**	**54.18**	**3.34**	**5.8**

Registration Number: 420-P010019355A-000-000-0000000-0000 Registration Date/Time: 02/18/2020 14:53 HERS Provider: Cal Energy

CA Building Energy Efficiency Standards - 2019 Residential Compliance Report Version: 2019.1.100 Schema Version: rev 20190401 Report Generated: 2020-02-18 14:52:11

CERTIFICATE OF COMPLIANCE **CF1R-PRF-01E**

Project Name: 1-BR Apartment **Calculation Date/Time:** 2020-02-18T14:51:54-08:00 **(Page 2 of 8)**

Calculation Description: Title 24 Analysis **Input File Name:** 20-012 - FASHION PARK APARTMENTS - LAUTERBACH (1 Bedroom).ribd19x

REQUIRED SPECIAL FEATURES
The following are features that must be installed as condition for meeting the modeled energy performance for this computer analysis.
• New ductwork added is less than 40 ft. in length
• Non-standard duct location (any location other than attic)

HERS FEATURE SUMMARY
The following is a summary of the features that must be field-verified by a certified HERS Rater as a condition for meeting the modeled energy performance for this computer analysis. Additional detail is provided in the building tables below. Registered CF2Rs and CF3Rs are required to be completed in the HERS Registry
Building-level Verifications: • Kitchen range hood Cooling System Verifications: • Verified EER • Verified SEER Heating System Verifications: • -- None -- HVAC Distribution System Verifications: • Duct Sealing required if a duct system component, plenum, or air handling unit is altered Domestic Hot Water System Verifications: • -- None --

BUILDING - FEATURES INFORMATION						
01	02	03	04	05	06	07
Project Name	Conditioned Floor Area (ft^2)	Number of Dwelling Units	Number of Bedrooms	Number of Zones	Number of Ventilation Cooling Systems	Number of Water Heating Systems
1-BR Apartment	472	1	1	1	0	1

ZONE INFORMATION						
01	02	03	04	05	06	07
Zone Name	Zone Type	HVAC System Name	Zone Floor Area (ft^2)	Avg. Ceiling Height	Water Heating System 1	Water Heating System 2
1 Bedroom Apartment	Conditioned	HVAC System1	472	9	DHW Sys 1	N/A

Registration Number: 420-P010019355A-000-000-0000000-0000 Registration Date/Time: 02/18/2020 14:53 HERS Provider: Cal Energy

CA Building Energy Efficiency Standards - 2019 Residential Compliance Report Version: 2019.1.100 Schema Version: rev 20190401 Report Generated: 2020-02-18 14:52:11

CERTIFICATE OF COMPLIANCE **CF1R-PRF-01E**

Project Name: 1-BR Apartment **Calculation Date/Time:** 2020-02-18T14:51:54-08:00 **(Page 3 of 8)**

Calculation Description: Title 24 Analysis **Input File Name:** 20-012 - FASHION PARK APARTMENTS - LAUTERBACH (1 Bedroom).ribd19x

OPAQUE SURFACES										
01	02	03	04	05	06	07	08	09	10	11
Name	Zone	Construction	Azimuth	Orientation	Gross Area (ft^2)	Window and Door Area (ft2)	Tilt (deg)	Status	Verified Existing Condition	Existing Construction
Front Wall	1 Bedroom Apartment	R-15 Wall	180	Front	193.5	68	90	New	n/a	
Left Wall	1 Bedroom Apartment	R-15 Wall	270	Left	216	0	90	Existing	No	
Rear Wall	1 Bedroom Apartment	R-15 Wall	0	Back	193.5	0	90	Existing	No	
Right Wall	1 Bedroom Apartment	R-15 Wall	90	Right	216	0	90	Existing	No	
Raised Floor	1 Bedroom Apartment	R-19 Floor No Crawlspace	n/a	n/a	100	n/a	n/a	New	n/a	
Raised Floor 2	1 Bedroom Apartment	R-19 Floor No Crawlspace	n/a	n/a	372	n/a	n/a	New	n/a	

FENESTRATION / GLAZING																
01	02	03	04	05	06	07	08	09	10	11	12	13	14	15	16
Name	Type	Surface	Orientation	Azimuth	Width (ft)	Height (ft)	Mult.	Area (ft^2)	U-factor	U-factor Source	SHGC	SHGC Source	Exterior Shading	Status	Verified Existing Condition
Window	Window	Front Wall	Front	180			1	24	0.3	NFRC	0.23	NFRC	Bug Screen	New	n/a
Window 2	Window	Front Wall	Front	180			1	24	0.3	NFRC	0.23	NFRC	Bug Screen	New	n/a

OPAQUE DOORS					
01	02	03	04	05	06
Name	Side of Building	Area (ft^2)	U-factor	Status	Verified Existing Condition
Door	Front Wall	20	0.2	New	n/a

Registration Number: 420-P010019355A-000-000-0000000-0000 Registration Date/Time: 02/18/2020 14:53 HERS Provider: Cal Energy

CA Building Energy Efficiency Standards - 2019 Residential Compliance Report Version: 2019.1.100 Schema Version: rev 20190401 Report Generated: 2020-02-18 14:52:11

CERTIFICATE OF COMPLIANCE **CF1R-PRF-01E**

Project Name: 1-BR Apartment **Calculation Date/Time:** 2020-02-18T14:51:54-08:00 **(Page 4 of 8)**

Calculation Description: Title 24 Analysis **Input File Name:** 20-012 - FASHION PARK APARTMENTS - LAUTERBACH (1 Bedroom).ribd19x

SLAB FLOORS								
01	02	03	04	05	06	07	08	09
Name	Zone	Area (ft2)	Perimeter (ft)	Edge Insul. R-value and Depth	Carpeted Fraction	Heated	Status	Verified Existing Condition
Slab	1 Bedroom Apartment	372	91	None	80%	No	Existing	No
Slab 2	1 Bedroom Apartment	100	91	None	80%	No	New	n/a

OPAQUE SURFACE CONSTRUCTIONS							
01	02	03	04	05	06	07	08
Construction Name	Surface Type	Construction Type	Framing	Total Cavity R-value	Interior / Exterior Continuous R-value	U-factor	Assembly Layers
R-15 Wall	Exterior Walls	Wood Framed Wall	2x4 @ 16 in. O.C.	R-15	None / None	0.095	Inside Finish: Gypsum Board Cavity / Frame: R-15 / 2x4 Exterior Finish: 3 Coat Stucco
R-19 Floor No Crawlspace	Exterior Floors	Wood Framed Floor	2x10 @ 16 in. O.C.	R-19	None / None	0.047	Floor Surface: Carpeted Floor Deck: Wood Siding/sheathing/decking Cavity / Frame: R-19 / 2x10

BUILDING ENVELOPE - HERS VERIFICATION			
01	02	03	04
Quality Insulation Installation (QII)	Quality Installation of Spray Foam Insulation	Building Envelope Air Leakage	CFM50
Not Required	Not Required	Not Required	n/a

Registration Number: 420-P010019355A-000-000-0000000-0000 Registration Date/Time: 02/18/2020 14:53 HERS Provider: Cal Energy

CA Building Energy Efficiency Standards - 2019 Residential Compliance Report Version: 2019.1.100 Schema Version: rev 20190401 Report Generated: 2020-02-18 14:52:11

CERTIFICATE OF COMPLIANCE **CF1R-PRF-01E**

Project Name: 1-BR Apartment **Calculation Date/Time:** 2020-02-18T14:51:54-08:00 **(Page 5 of 8)**

Calculation Description: Title 24 Analysis **Input File Name:** 20-012 - FASHION PARK APARTMENTS - LAUTERBACH (1 Bedroom).ribd19x

WATER HEATING SYSTEMS									
01	02	03	04	05	06	07	08	09	10
Name	System Type	Distribution Type	Water Heater Name (#)	Solar Fraction (%)	Compact Distribution	HERS Verification	Status	Verified Existing Condition	Existing Water Heating System
DHW Sys 1	Domestic Hot Water (DHW)	Standard Distribution System	DHW Heater 1 (1)	0	None	n/a	New	NA	

WATER HEATERS														
01	02	03	04	05	06	07	08	09	10	11	12	13	14
Name	Heating Element Type	Tank Type	# Units	Tank Vol. (gal)	Energy Factor or Efficiency	Input Rating or Pilot	Tank Insulation R-value (Int/Ext)	Standby Loss or Recovery Eff.	1st Hr. Rating or Flow Rate	NEEA Heat Pump Brand or Model / Other	Tank Location or Ambient Condition	Status	Verified Existing Condition
DHW Heater 1	Natural Gas	Consumer Instantaneous	1	0	0.81-UEF	200000 Btu/Hr	0	n/a	n/a	n/a	n/a	New	

WATER HEATING - HERS VERIFICATION							
01	02	03	04	05	06	07	08
Name	Pipe Insulation	Parallel Piping	Compact Distribution	Compact Distribution Type	Recirculation Control	Central DHW Distribution	Shower Drain Water Heat Recovery
DHW Sys 1 - 1/1	Not Required	Not Required	Not Required	None	Not Required	Not Required	Not Required

Registration Number: 420-P010019355A-000-000-0000000-0000 Registration Date/Time: 02/18/2020 14:53 HERS Provider: Cal Energy

CA Building Energy Efficiency Standards - 2019 Residential Compliance Report Version: 2019.1.100 Schema Version: rev 20190401 Report Generated: 2020-02-18 14:52:11

CERTIFICATE OF COMPLIANCE **CF1R-PRF-01E**

Project Name: 1-BR Apartment **Calculation Date/Time:** 2020-02-18T14:51:54-08:00 **(Page 6 of 8)**

Calculation Description: Title 24 Analysis **Input File Name:** 20-012 - FASHION PARK APARTMENTS - LAUTERBACH (1 Bedroom).ribd19x

SPACE CONDITIONING SYSTEMS											
01	02	03	04	05	06	07	08	09	10	11	12
Name	System Type	Heating Unit Name	Cooling Unit Name	Fan Name	Distribution Name	Required Thermostat Type	Heating Equipment Count	Cooling Equipment Count	Status	Verified Existing Condition	Existing HVAC System
HVAC System1	Heating and cooling system other	Heating Component 1	Cooling Component 1	HVAC Fan 1	Air Distribution System 1	Setback	1	1	New	No	n/a

HVAC - HEATING UNIT TYPES				
01	02	03	04	05
Name	System Type	Number of Units	Heating Efficiency Type	Efficiency
Heating Component 1	Gas wall furnace	1	AFUE	96

HVAC - COOLING UNIT TYPES							
01	02	03	04	05	06	07	08
Name	System Type	Number of Units	Efficiency EER	Efficiency SEER	Zonally Controlled	Mulit-speed Compressor	HERS Verification
Cooling Component 1	Central split AC	1	12.5	15	Not Zonal	Single Speed	Cooling Component 1-hers-cool

HVAC COOLING - HERS VERIFICATION					
01	02	03	04	05	06
Name	Verified Airflow	Airflow Target	Verified EER	Verified SEER	Verified Refrigerant Charge
Cooling Component 1-hers-cool	Not Required	0	Required	Required	Not Required

Registration Number: 420-P010019355A-000-000-0000000-0000 Registration Date/Time: 02/18/2020 14:53 HERS Provider: Cal Energy

CA Building Energy Efficiency Standards - 2019 Residential Compliance Report Version: 2019.1.100 Schema Version: rev 20190401 Report Generated: 2020-02-18 14:52:11

CERTIFICATE OF COMPLIANCE **CF1R-PRF-01E**

Project Name: 1-BR Apartment **Calculation Date/Time:** 2020-02-18T14:51:54-08:00 **(Page 7 of 8)**

Calculation Description: Title 24 Analysis **Input File Name:** 20-012 - FASHION PARK APARTMENTS - LAUTERBACH (1 Bedroom).ribd19x

HVAC - DISTRIBUTION SYSTEMS															
01	02	03	04	05	06	07	08	09	10	11	12	13	14	15	16
			Duct Ins. R-value		Duct Location		Surface Area								
Name	Type	Design Type	Supply	Return	Supply	Return	Supply	Return	Bypass Duct	Duct Leakage	HERS Verification	Status	Verified Existing Condition	Existing Distribution system	New Ducts 40 ft
Air Distribution System 1	Conditioned space-entirely	Non-Verified	R-6	R-6	Conditioned Zone	Conditioned Zone	n/a	n/a	No Bypass Duct	Existing (not specified)	Air Distribution System 1-hers-dist	Existing + New	No	n/a	n/a

HVAC - FAN SYSTEMS			
01	02	03	04
Name	Type	Fan Power (Watts/CFM)	Name
HVAC Fan 1	HVAC Fan	0.58	HVAC Fan 1-hers-fan

HVAC FAN SYSTEMS - HERS VERIFICATION		
01	02	03
Name	Verified Fan Watt Draw	Required Fan Efficiency (Watts/CFM)
HVAC Fan 1-hers-fan	Not Required	0

Registration Number: 420-P010019355A-000-000-0000000-0000 Registration Date/Time: 02/18/2020 14:53 HERS Provider: Cal Energy

CA Building Energy Efficiency Standards - 2019 Residential Compliance Report Version: 2019.1.100 Schema Version: rev 20190401 Report Generated: 2020-02-18 14:52:11

CERTIFICATE OF COMPLIANCE **CF1R-PRF-01E**

Project Name: 1-BR Apartment **Calculation Date/Time:** 2020-02-18T14:51:54-08:00 **(Page 8 of 8)**

Calculation Description: Title 24 Analysis **Input File Name:** 20-012 - FASHION PARK APARTMENTS - LAUTERBACH (1 Bedroom).ribd19x

DOCUMENTATION AUTHOR'S DECLARATION STATEMENT	
1. I certify that this Certificate of Compliance documentation is accurate and complete.	
Documentation Author Name: Shane Judd	Documentation Author Signature: Shane Judd
Company: All-Trade Engineering	Signature Date: 02/18/2020
Address: 17 E High St.	CEA/ HERS Certification Identification (If applicable):
City/State/Zip: Moorpark, CA 93021	Phone: (805) 552-4000

RESPONSIBLE PERSON'S DECLARATION STATEMENT	
I certify the following under penalty of perjury, under the laws of the State of California: 1. I am eligible under Division 3 of the Business and Professions Code to accept responsibility for the building design identified on this Certificate of Compliance. 2. I certify that the energy features and performance specifications identified on this Certificate of Compliance conform to the requirements of Title 24, Part 1 and Part 6 of the California Code of Regulations. 3. The building design features or system design features identified on this Certificate of Compliance are consistent with the information provided on other applicable compliance documents, worksheets, calculations, plans and specifications submitted to the enforcement agency for approval with this building permit application.	
Responsible Designer Name: Shane Judd	Responsible Designer Signature: Shane Judd
Company: All-Trade Engineering	Date Signed: 02/18/2020
Address: 17 E High St.	License: C70991
City/State/Zip: Moorpark, CA 93021	Phone: (805) 552-4000

NOTICE: This certificate has been generated by California Energy Registry, Inc. ("Cal Energy") using information uploaded by third parties not affiliated or related to Cal Energy. Therefore, Cal Energy is not responsible for, and cannot guarantee,

Registration Number: 420-P010019355A-000-000-0000000-0000 Registration Date/Time: 02/18/2020 14:53 HERS Provider: Cal Energy

CA Building Energy Efficiency Standards - 2019 Residential Compliance Report Version: 2019.1.100 Schema Version: rev 20190401 Report Generated: 2020-02-18 14:52:11

THESE DRAWINGS AND SPECIFICATIONS ARE THE PROPERTY AND COPYRIGHT OF LAUTERBACH & ASSOCIATES, ALL RIGHTS RESERVED, AND SHALL NOT BE USED ON ANY OTHER WORK OR PROJECT EXCEPT BY WRITTEN AGREEMENT WITH LAUTERBACH & ASSOCIATES. WRITTEN DIMENSIONS SHALL TAKE PRECEDENCE OVER SCALED DIMENSIONS AND SHALL BE VERIFIED ON THE JOB SITE. ANY DISCREPANCY SHALL BE BROUGHT TO THE NOTICE OF LAUTERBACH & ASSOCIATES PRIOR TO COMMENCEMENT OF ANY WORK.

LAUTERBACH & ASSOCIATES
ARCHITECTS INC.
David C. Kesterson, Architect • Ilona Scott, Architect • Mark S. Pettit, Architect
300 MONTGOMERY AVENUE, OXNARD, CALIFORNIA 93030 | 805-988-0912 | FAX 805-981-4510 | www.la-arch.com

REGISTERED PROFESSIONAL ENGINEER SHANE DENNIS JUDD No. M34632 MECHANICAL STATE OF CALIFORNIA

REGISTERED PROFESSIONAL ENGINEER SHANE DENNIS JUDD No. C70991 CIVIL STATE OF CALIFORNIA

FASHION PARK APARTMENTS

234, 251 & 257 FASHION PARK
OXNARD, CA, 93036

CITY OF OXNARD HOUSING AUTHORITY

435 S. D STREET
OXNARD, CALIFORNIA 93030

NO	DESCRIPTION	DATE
1	SUBMIT	4/8/2020

ISSUE

JOB NO. 20-190209

DRAWN BY:
CHECKED BY:
PROJECT MANAGER:
PRINT DATE: 2/15/19 8:36:51 AM

TITLE 24 CALCS

N-1

CERTIFICATE OF COMPLIANCE **CF1R-PRF-01E**

Project Name: 2-BR Apartment **Calculation Date/Time:** 2020-02-18T13:59:47-08:00 **(Page 1 of 9)**

Calculation Description: Title 24 Analysis **Input File Name:** 20-012 - FASHION PARK APARTMENTS - LAUTERBACH.ribd19x

GENERAL INFORMATION					
01	Project Name	2-BR Apartment			
02	Run Title	Title 24 Analysis			
03	Project Location	234 Fashion Park Place			
04	City	Oxnard	05	Standards Version	2019
06	Zip code	93033	07	Software Version	EnergyPro 8.0
08	Climate Zone	6	09	Front Orientation (deg/ Cardinal)	180
10	Building Type	SingleFamily	11	Number of Dwelling Units	1
12	Project Scope	AdditionAlteration	13	Number of Bedrooms	1
14	New Cond. Floor Area (ft^2)	0	15	Number of Stories	1
16	Existing Cond. Floor Area (ft^2)	1018	17	Fenestration Average U-factor	0.3
18	Total Cond. Floor Area (ft^2)	1018	19	Glazing Percentage (%)	15.23%
20	ADU Bedroom Count	0	21	ADU Conditioned Floor Area	0

COMPLIANCE RESULTS	
01	Building Complies with Computer Performance
02	This building incorporates features that require field testing and/or verification by a certified HERS rater under the supervision of a CEC-approved HERS provider.
03	This building incorporates one or more Special Features shown below

ENERGY USE SUMMARY

Energy Use (kTDV/ft^2-yr)	Standard Design	Proposed Design	Compliance Margin	Percent Improvement
Space Heating	18.81	15.16	3.65	19.4
Space Cooling	4.52	3.85	0.67	14.8
IAQ Ventilation	0	0	0	
Water Heating	26.04	26.04	0	0
Self Utilization Credit	n/a	0	0	n/a
Compliance Energy Total	**49.37**	**45.05**	**4.32**	**8.8**

CERTIFICATE OF COMPLIANCE **CF1R-PRF-01E**

Project Name: 2-BR Apartment **Calculation Date/Time:** 2020-02-18T13:59:47-08:00 **(Page 2 of 9)**

Calculation Description: Title 24 Analysis **Input File Name:** 20-012 - FASHION PARK APARTMENTS - LAUTERBACH.ribd19x

REQUIRED SPECIAL FEATURES

The following are features that must be installed as condition for meeting the modeled energy performance for this computer analysis.

- New ductwork added is less than 40 ft. in length
- Non-standard duct location (any location other than attic)

HERS FEATURE SUMMARY

The following is a summary of the features that must be field-verified by a certified HERS Rater as a condition for meeting the modeled energy performance for this computer analysis. Additional detail is provided in the building tables below. Registered CF2Rs and CF3Rs are required to be completed in the HERS Registry

Building-level Verifications:
- Kitchen range hood

Cooling System Verifications:
- Verified EER
- Verified SEER

Heating System Verifications:
- -- None --

HVAC Distribution System Verifications:
- Duct Sealing required if a duct system component, plenum, or air handling unit is altered

Domestic Hot Water System Verifications:
- -- None --

BUILDING - FEATURES INFORMATION

01	02	03	04	05	06	07
Project Name	Conditioned Floor Area (ft^2)	Number of Dwelling Units	Number of Bedrooms	Number of Zones	Number of Ventilation Cooling Systems	Number of Water Heating Systems
2-BR Apartment	1018	1	1	1	0	1

ZONE INFORMATION

01	02	03	04	05	06	07
Zone Name	Zone Type	HVAC System Name	Zone Floor Area (ft^2)	Avg. Ceiling Height	Water Heating System 1	Water Heating System 2
2 Bedroom Apartment	Conditioned	HVAC System1	1018	9	DHW Sys 1	N/A

CERTIFICATE OF COMPLIANCE **CF1R-PRF-01E**

Project Name: 2-BR Apartment **Calculation Date/Time:** 2020-02-18T13:59:47-08:00 **(Page 3 of 9)**

Calculation Description: Title 24 Analysis **Input File Name:** 20-012 - FASHION PARK APARTMENTS - LAUTERBACH.ribd19x

OPAQUE SURFACES

01	02	03	04	05	06	07	08	09	10	11
Name	Zone	Construction	Azimuth	Orientation	Gross Area (ft^2)	Window and Door Area (ft2)	Tilt (deg)	Status	Verified Existing Condition	Existing Construction
Front Wall	2 Bedroom Apartment	R-15 Wall	180	Front	193.5	0	90	Existing	No	
Left Wall	2 Bedroom Apartment	R-15 Wall	270	Left	171	0	90	Existing	No	
Rear Wall	2 Bedroom Apartment	R-15 Wall	0	Back	193.5	51	90	Existing	No	
Right Wall	2 Bedroom Apartment	R-15 Wall	90	Right	171	20	90	Existing	No	
Front Wall 2	2 Bedroom Apartment	R-15 Wall	180	Front	193.5	48	90	Existing	No	
Left Wall 2	2 Bedroom Apartment	R-15 Wall	270	Left	342	0	90	Existing	No	
Rear Wall 2	2 Bedroom Apartment	R-15 Wall	0	Back	193.5	32	90	Existing	No	
Right Wall 2	2 Bedroom Apartment	R-15 Wall	90	Right	342	24	90	Existing	No	
Roof	2 Bedroom Apartment	R-30 Roof Attic	n/a	n/a	642	n/a	n/a	Existing	No	
Raised Floor	2 Bedroom Apartment	R-19 Floor No Crawlspace	n/a	n/a	1018	n/a	n/a	Existing	No	

ATTIC

01	02	03	04	05	06	07	08	09	10
Name	Construction	Type	Roof Rise (x in 12)	Roof Reflectance	Roof Emittance	Radiant Barrier	Cool Roof	Status	Verified Existing Condition
Attic 2 Bedroom Apartment	Attic Roof2 Bedroom Apartment	Ventilated	0	0.1	0.85	Yes	No	Existing	No

CERTIFICATE OF COMPLIANCE **CF1R-PRF-01E**

Project Name: 2-BR Apartment **Calculation Date/Time:** 2020-02-18T13:59:47-08:00 **(Page 4 of 9)**

Calculation Description: Title 24 Analysis **Input File Name:** 20-012 - FASHION PARK APARTMENTS - LAUTERBACH.ribd19x

FENESTRATION / GLAZING

01	02	03	04	05	06	07	08	09	10	11	12	13	14	15	16
Name	Type	Surface	Orientation	Azimuth	Width (ft)	Height (ft)	Mult.	Area (ft^2)	U-factor	U-factor Source	SHGC	SHGC Source	Exterior Shading	Status	Verified Existing Condition
Slider	Window	Rear Wall	Back	0			1	51	0.3	NFRC	0.23	NFRC	Bug Screen	Existing	No
Window	Window	Front Wall 2	Front	180			1	16	0.3	NFRC	0.23	NFRC	Bug Screen	New	n/a
Window 2	Window	Front Wall 2	Front	180			1	16	0.3	NFRC	0.23	NFRC	Bug Screen	New	n/a
Window 3	Window	Front Wall 2	Front	180			1	16	0.3	NFRC	0.23	NFRC	Bug Screen	New	n/a
Window 4	Window	Rear Wall 2	Back	0			1	16	0.3	NFRC	0.23	NFRC	Bug Screen	New	n/a
Window 5	Window	Rear Wall 2	Back	0			1	16	0.3	NFRC	0.23	NFRC	Bug Screen	New	n/a
Window 6	Window	Right Wall 2	Right	90			1	24	0.3	NFRC	0.23	NFRC	Bug Screen	New	n/a

OPAQUE DOORS

01	02	03	04	05	06
Name	Side of Building	Area (ft^2)	U-factor	Status	Verified Existing Condition
Door	Right Wall	20	0.2	Existing	No

SLAB FLOORS

01	02	03	04	05	06	07	08	09
Name	Zone	Area (ft2)	Perimeter (ft)	Edge Insul. R-value and Depth	Carpeted Fraction	Heated	Status	Verified Existing Condition
Slab	2 Bedroom Apartment	1018	91	None	80%	No	Existing	No

CERTIFICATE OF COMPLIANCE **CF1R-PRF-01E**

Project Name: 2-BR Apartment **Calculation Date/Time:** 2020-02-18T13:59:47-08:00 **(Page 5 of 9)**

Calculation Description: Title 24 Analysis **Input File Name:** 20-012 - FASHION PARK APARTMENTS - LAUTERBACH.ribd19x

OPAQUE SURFACE CONSTRUCTIONS

01	02	03	04	05	06	07	08
Construction Name	Surface Type	Construction Type	Framing	Total Cavity R-value	Interior / Exterior Continuous R-value	U-factor	Assembly Layers
R-15 Wall	Exterior Walls	Wood Framed Wall	2x4 @ 16 in. O. C.	R-15	None / None	0.095	Inside Finish: Gypsum Board Cavity / Frame: R-15 / 2x4 Exterior Finish: 3 Coat Stucco
Attic Roof2 Bedroom Apartment	Attic Roofs	Wood Framed Ceiling	2x4 @ 24 in. O. C.	R-0	None / None	0.644	Roofing: Light Roof (Asphalt Shingle) Roof Deck: Wood Siding/sheathing/decking Cavity / Frame: no insul. / 2x4
R-30 Roof Attic	Ceilings (below attic)	Wood Framed Ceiling	2x4 @ 24 in. O. C.	R-30	None / None	0.032	Over Ceiling Joists: R-20.9 insul. Cavity / Frame: R-9.1 / 2x4 Inside Finish: Gypsum Board
R-19 Floor No Crawlspace	Exterior Floors	Wood Framed Floor	2x10 @ 16 in. O. C.	R-19	None / None	0.047	Floor Surface: Carpeted Floor Deck: Wood Siding/sheathing/decking Cavity / Frame: R-19 / 2x10

BUILDING ENVELOPE - HERS VERIFICATION

01	02	03	04
Quality Insulation Installation (QII)	Quality Installation of Spray Foam Insulation	Building Envelope Air Leakage	CFM50
Not Required	Not Required	Not Required	n/a

CERTIFICATE OF COMPLIANCE **CF1R-PRF-01E**

Project Name: 2-BR Apartment **Calculation Date/Time:** 2020-02-18T13:59:47-08:00 **(Page 6 of 9)**

Calculation Description: Title 24 Analysis **Input File Name:** 20-012 - FASHION PARK APARTMENTS - LAUTERBACH.ribd19x

WATER HEATING SYSTEMS

01	02	03	04	05	06	07	08	09	10
Name	System Type	Distribution Type	Water Heater Name (#)	Solar Fraction (%)	Compact Distribution	HERS Verification	Status	Verified Existing Condition	Existing Water Heating System
DHW Sys 1	Domestic Hot Water (DHW)	Standard Distribution System	DHW Heater 1 (1)	0	None	n/a	Existing	No	

WATER HEATING - HERS VERIFICATION

01	02	03	04	05	06	07	08
Name	Pipe Insulation	Parallel Piping	Compact Distribution	Compact Distribution Type	Recirculation Control	Central DHW Distribution	Shower Drain Water Heat Recovery
DHW Sys 1 - 1/1	Not Required	Not Required	Not Required	None	Not Required	Not Required	Not Required

SPACE CONDITIONING SYSTEMS

01	02	03	04	05	06	07	08	09	10	11	12
Name	System Type	Heating Unit Name	Cooling Unit Name	Fan Name	Distribution Name	Required Thermostat Type	Heating Equipment Count	Cooling Equipment Count	Status	Verified Existing Condition	Existing HVAC System
HVAC System1	Heating and cooling system other	Heating Component 1	Cooling Component 1	HVAC Fan 1	Air Distribution System 1	Setback	1	1	New	No	n/a

HVAC - HEATING UNIT TYPES

01	02	03	04	05
Name	System Type	Number of Units	Heating Efficiency Type	Efficiency
Heating Component 1	Gas wall furnace	1	AFUE	96.2

CERTIFICATE OF COMPLIANCE **CF1R-PRF-01E**

Project Name: 2-BR Apartment **Calculation Date/Time:** 2020-02-18T13:59:47-08:00 **(Page 7 of 9)**

Calculation Description: Title 24 Analysis **Input File Name:** 20-012 - FASHION PARK APARTMENTS - LAUTERBACH.ribd19x

HVAC - COOLING UNIT TYPES

01	02	03	04	05	06	07	08
Name	System Type	Number of Units	Efficiency EER	Efficiency SEER	Zonally Controlled	Multi-speed Compressor	HERS Verification
Cooling Component 1	Central split AC	1	12.5	15	Not Zonal	Single Speed	Cooling Component 1-hers-cool

HVAC COOLING - HERS VERIFICATION

01	02	03	04	05	06
Name	Verified Airflow	Airflow Target	Verified EER	Verified SEER	Verified Refrigerant Charge
Cooling Component 1-hers-cool	Not Required	0	Required	Required	Not Required

HVAC - DISTRIBUTION SYSTEMS

01	02	03	04	05	06	07	08	09	10	11	12	13	14	15	16
			Duct Ins. R-value		Duct Location		Surface Area								
Name	Type	Design Type	Supply	Return	Supply	Return	Supply	Return	Bypass Duct	Duct Leakage	HERS Verification	Status	Verified Existing Condition	Existing Distribution system	New Ducts 40 ft
Air Distribution System 1	Conditioned space-entirely	Non-Verified	R-6	R-6	Conditioned Zone	Conditioned Zone	n/a	n/a	No Bypass Duct	Existing (not specified)	Air Distribution System 1-hers-dist	Existing + New	No	n/a	n/a

HVAC - FAN SYSTEMS

01	02	03	04
Name	Type	Fan Power (Watts/CFM)	Name
HVAC Fan 1	HVAC Fan	0.58	HVAC Fan 1-hers-fan

CERTIFICATE OF COMPLIANCE **CF1R-PRF-01E**

Project Name: 2-BR Apartment **Calculation Date/Time:** 2020-02-18T13:59:47-08:00 **(Page 8 of 9)**

Calculation Description: Title 24 Analysis **Input File Name:** 20-012 - FASHION PARK APARTMENTS - LAUTERBACH.ribd19x

HVAC FAN SYSTEMS - HERS VERIFICATION

01	02	03
Name	Verified Fan Watt Draw	Required Fan Efficiency (Watts/CFM)
HVAC Fan 1-hers-fan	Not Required	0

CERTIFICATE OF COMPLIANCE **CF1R-PRF-01E**

Project Name: 2-BR Apartment **Calculation Date/Time:** 2020-02-18T13:59:47-08:00 **(Page 9 of 9)**

Calculation Description: Title 24 Analysis **Input File Name:** 20-012 - FASHION PARK APARTMENTS - LAUTERBACH.ribd19x

DOCUMENTATION AUTHOR'S DECLARATION STATEMENT

I, I certify that this Certificate of Compliance documentation is accurate and complete.

Documentation Author Name: Shane Judd	Documentation Author Signature: Shane Judd
Company: All-Trade Engineering	Signature Date: 02/18/2020
Address: 17 E High St.	CEA/ HERS Certification Identification (If applicable):
City/State/Zip: Moorpark, CA 93021	Phone: (805) 552-4000

RESPONSIBLE PERSON'S DECLARATION STATEMENT

I certify the following under penalty of perjury, under the laws of the State of California:

1. I am eligible under Division 3 of the Business and Professions Code to accept responsibility for the building design identified on this Certificate of Compliance.
2. I certify that the energy features and performance specifications identified on this Certificate of Compliance conform to the requirements of Title 24, Part 1 and Part 6 of the California Code of Regulations.
3. The building design features or system design features identified on this Certificate of Compliance are consistent with the information provided on other applicable compliance documents, worksheets, calculations, plans and specifications submitted to the enforcement agency for approval with this building permit application.

Responsible Designer Name: Shane Judd	Responsible Designer Signature: Shane Judd
Company: All-Trade Engineering	Date Signed: 02/18/2020
Address: 17 E High St.	License: C70991
City/State/Zip: Moorpark, CA 93021	Phone: (805) 552-4000

NOTICE: This certificate has been generated by California Energy Registry, Inc. ("Cal Energy") using information uploaded by third parties not affiliated or related to Cal Energy. Therefore, Cal Energy is not responsible for, and cannot guarantee,

THESE DRAWINGS AND SPECIFICATIONS ARE THE PROPERTY AND COPYRIGHT OF LAUTERBACH & ASSOCIATES. ALL RIGHTS RESERVED, AND SHALL NOT BE USED ON ANY OTHER WORK OR PROJECT EXCEPT BY WRITTEN AGREEMENT WITH LAUTERBACH & ASSOCIATES. WRITTEN DIMENSIONS SHALL TAKE PRECEDENCE OVER SCALED DIMENSIONS AND SHALL BE VERIFIED ON THE JOB SITE. ANY DISCREPANCY SHALL BE BROUGHT TO THE NOTICE OF LAUTERBACH & ASSOCIATES PRIOR TO COMMENCEMENT OF ANY WORK.

LAUTERBACH & ASSOCIATES
ARCHITECTS INC.
David C. Kesterson, Architect • Ilona Scott, Architect • Mark S. Pettit, Architect
300 MONTGOMERY AVENUE, OXNARD, CALIFORNIA 93030 | 805-988-0912 | FAX 805-981-4510 | www.la-arch.com

REGISTERED PROFESSIONAL ENGINEER SHANE DENNIS JUDD No. M24632 MECHANICAL STATE OF CALIFORNIA

REGISTERED PROFESSIONAL ENGINEER SHANE DENNIS JUDD No. C70991 CMS STATE OF CALIFORNIA

FASHION PARK APARTMENTS

234, 251 & 257 FASHION PARK
OXNARD, CA, 93036

CITY OF OXNARD HOUSING AUTHORITY

435 S. D STREET
OXNARD, CALIFORNIA 93030

NO	DESCRIPTION	DATE
1	SUBMIT	4/8/2020

ISSUE

JOB NO. 20-190209

DRAWN BY:
CHECKED BY:
PROJECT MANAGER:
PRINT DATE: 2/15/19 8:36:51 AM

TITLE 24 CALCS

N-2

PLUMBING NOTES

1. All work shall be in accordance and comply with the latest applicable city ordinance and the 2019 CPC.

2. It is the intent of these drawings that this be a complete plumbing installation. Any apparent errors shall be brought to the attention of the designer and/or tenant prior to proceeding.

3.. Contractor shall verify all existing conditions versus new installations to assure proper new installations can be completed properly prior to proceeding.

4. These plans shall be used only after approvals and permits have been secured by the proper jurisdiction of the department of building and safety.

5. All drawings and details are provided as a diagrammatic version of the proposed work. The contractor shall be held liable and responsible for all field verifications of equipment, materials, and installations.

6. Contractor shall verify all equipment is installed in accordance with manufacturer's recommendations and local code requirements prior to any installations.

7. Provide a reduced pressure backflow preventer for all soda lines.

8. Provide a backflow protection device for any equipment directly connected the water supply such as ice makers and coffee machines.

9. Penetrations of fire-resistive walls, floor-ceilings and roof ceilings shall be protected as required in CBC Section 713.

10. Exhaust outlets and plumbing vents shall terminate not less than 10' from or at least 3' above any openable window, door opening, air intake, vent shaft, adjacent building, and property line.

11. Overflow drains having the same size as roof drains and on independent drain lines are required. In lieu of this, overflow scuppers, 4" minimum high with a width equal to the circumference of the roof drain may be provided. Overflow system shall have inlets located two inches above the roof low points. [§ 1101.11 CPC].

12. All floor drains and floor sinks shall be installed with trap primers as required by code and jurisdictional requirements whether indicated on drawings or not.

13. All fixtures shall be provided as water saving devices per the following minimum requirements:
Water Closet: 1.28 gpf Urinal: 0.5 gpf Lavatory Faucet: 0.5 gpm Sink Faucet: 2.2 gpm Showerhead: 2.0 gpm

14. Waste and vent piping shall slope a minimum of 2%. Domestic piping shall slope towards its origin min 2%.

15. Pipes shall not come in direct contact with hangers. Furnish and install isolators at each pipe hanger and pipe support for cold water piping.

16. Insulation around hot water piping shall enter through hangers. Install approved insulation protection shield at each such penetration.

17. Valves shall be bronze body two piece ball valves rated to 600 psi working pressure full port with adjustable packing gland. Extend lever handle for hot water piping. Solder or thread ends as required.

18. Install above ground cleanouts at each change in direction of piping greater than 45 degrees, at minimum of 50' for piping 4" and smaller and 100' for larger piping. Cleanouts shall be full size of pipe unless otherwise indicated on the drawings; extended to surface of wall or floor with 45 degree fitting and closed with bronze flush, countersunk plugs. Install floor and wall cleanout covers for concealed piping.

19. Install flashing sleeves on stacks passing through the roof. Secure over stack flashing in accordance with manufacturer's instructions. Vent stacks and service lines through roof and decks shall be flashed with 4 lb. or heavier sheet lead, in one piece 10" skirt, 5" boot, with suitable counter-flashing assembly.

20. Connections between dissimilar metals shall be installed by means of an approved di-electric fitting.

21. Completely cover the pipe openings for all piping passing through walls, floor and ceiling with chrome plated, stamped steel, hinged, split ring escutcheons with set screw. Piping penetrating rated wall or floor construction shall be set in UL fire rated sleeve/coupling penetrators.

22. Materials: Sanitary drainage, vent, and storm water piping above grade shall be standard weight cast iron soil pipe and fittings with stainless steel couplings with neoprene gaskets. Sanitary drainage below grade to 5' outside of building shall be schedule 40 ABS or standard weight cast iron soil pipe fittings with extra heavy cast iron couplings with neoprene gaskets. Yard piping beyond 5' outside of building shall be either vitrified clay, cast iron, schedule 40 ABS or PVC as required by local authorities. Storm drainage piping below grade shall be standard weight cast iron soil pipe and fittings with extra heavy cast iron couplings with neoprene gaskets. Rectangular piping shall be Alhambra Foundry cast iron pipe and adapters. A470 series pipe with A480 series adapters.

Water system above ground piping shall be Type 'L' copper tubing with wrought copper fittings with 95-5 soldered joints. Water system piping below grade shall be Type 'K' copper with sweated connections. Piping shall be laid in a bed of sand and shall be coated or wrapped in an approved manner.

Condensate piping shall be Type 'L' copper with wrought copper fittings with 95-5 (Tin Antimony) soldered joints.

Gas piping shall be schedule 40 black steel with extra heavy malleable iron screwed fittings. Gas piping which is exposed to weather shall be schedule 40 galvanized steel with extra heavy galvanized malleable iron fittings. Buried piping shall be factory wrapped or coated in an approved manner.

Hangers and supports:	Max. Horiz. Spacing	Max Vert. Spacing	Min. Rod Size
Cast Iron Pipe	5 ft.	15 ft.	3/8"
Cu. Tubing 1.5" and smaller	6 ft.	10 ft.	3/8"
Cu. Tubing 2" and larger	10 ft.	10 ft.	3/8"

23. Supports and hangers are to be provided to properly support, secure and align piping and to meet conditions. Provide seismic bracing for hangers and supports supporting piping. Comply with the latest edition of the Sheet Metal and Air Conditioning Contractors National Association Inc. Seismic Restraint Manual as approved by ANSI.

24. Provide and install a 1" high manufactured plastic valve tag at each valve, cock, and control device in the plumbing system. Each tag shall be individually numbered, and shall identify the system being served, I.E. CW = Cold Water, HW = Hot Water, G = Gas. Fasten each tag with a standard solid brass chain.

25. Provide and install a water hammer arrestor on each branch serving plumbing equipment with quick closing, self-closing or solenoid valves. Arrestors shall be sized and located in accordance with the manufacturer's recommendations and shall be fabricated of Type 'K' copper. A piston shall provide permanent mechanical barrier between fluid and pre-load air charge. The arrestor shall be FDA approved for use in potable water systems and shall be fully guaranteed for the life of the system.

26. Where metallic pipelines penetrate concrete structures such as building floors or walls, use plastic sleeves, rubber seals, or approved dielectric material to prevent pipe contact with the concrete and reinforcing steel. On all pipe, coat bare steel appurtenances such as bolts, joint hardnesses, or flexible couplings with coal tar or elastomeric based mastic, coal tar epoxy, moldable sealant, wax tape or approved equivalent.

27. Piping shall not come in direct contact with structure. Isolate piping by means of resilient sleeves, mounts, or minimum ¼" approved resilient material.

28. Earthquake actuated automatic gas shutoff valve shall be installed and conform with the appropriate California and ANSI standards as well as all authorities having jurisdiction.

29. Provide an approved type pressure regulator set at 80 psi when local water pressure is in excess of 80 psi. CPC, Sec. 608.2

30. Water closet bowls used for public use shall be elongated in design and equipped with an open front seat. CPC, Sec. 408.1.

31. Controls for an accessible water closet shall be operable with one hand and shall not require tight grasping, pinching or twisting. Controls shall be mounted on the wide side of the toilet compartment space no more than 44 inches above the floor. CBC, Sec. 1115B.4.5

32. In seismic design categories C, D, E & F water heaters shall be strapped within the upper 1/3 and lower 1/3 of its vertical dimension. The lower strap shall be a minimum of 4 inches above the controls. CPC, Sec. 508.2.

33. WATER SUPPLY TESTING PARAMETERS – Upon completion of a section or of the entire hot and cold water supply system, it shall be tested and proved tight under a water pressure not less than 100 psi. The water used for tests shall be obtained from a potable source of supply. The piping shall withstand the test without leaking for a period of not less than 15 minutes.

34. WASTE LINE TESTING PARAMETERS – The piping of the plumbing, drainage, and venting systems shall be tested with water. The water test shall be applied to the drainage and vent systems either in its entirety or in sections. All openings in the piping shall be tightly closed, except the highest opening, and the system filled with water to point of overflow. No section shall be tested with less than 10 ft. head of water. The water shall be kept in the system, or in the portion under test, for at least fifteen minutes before inspection starts.

35. GAS LINE TESTING PARAMETERS – The piping of the gas system shall be tested to 1.5 times the maximum working pressure per UMC 1311.3 or CPC 1214.3. Required pressure tests of ten psi or less shall be performed with gauges of one-tenth of a pound incrementation or less. CPC 319.1.

36. Approved metallic water line connectors shall be used from shutoffs to plumbing fixtures. Rubber and plastics shall not be used.

37. All electrical, mechanical, and plumbing fixtures shall be elevated at least to the lowest finished floor of the habitable and non-habitable area.

Water Pipe Sizing Calculation

Date: DECEMBER 6, 2019

METER ADDRESS: 2950,2956 CONCORD DR.

WATER PRESSURE: TELEPHONE (805) 378-3000
MAXIMUM PRESSURE: MINIMUM PRESSURE: 50.00 ELEVATION: 20 METER SIZE: 1.5"

DEVELOPED LENGTH (LENGTH FROM WATER METER TO FURTHEST WATER FIXTURE IN ON-SITE): 100 FT.
EQUIVALENT LENGTH (DEVELOPED LENGTH x 1.50): . . . . . 150 FT.

P.R.V.: _____ YES __X__ NO MAKE: MODEL: SIZE: PRESS.:

BACKFLOW PREVENTOR (METER PROTECTION):
__X__ YES _____ NO MAKE: WILKINS MODEL: BF-375XL SIZE: 1.5"

WATER PRESSURE CALCULATION:

AVAILABLE PRESSURE: . . . . . +: 50.00
RESIDUAL PRESSURE: . . . . . -: 25.00
LOSS DUE TO ELEVATION: 16.00 X 0.43= . . . -: 6.88
LOSS THRU METER: . . . . . -: 7.00
LOSS THRU WATER SOFTENER: . . . . . -: 0.00
LOSS THRU P.R.V.: . . . . . -: 0.00
LOSS THRU BACKFLOW PREVENTOR: . . . . . -: 7.00

PRESSURE AVAILABLE FOR FRICTION LOSS: . . . : 4.16

ALLOWABLE FRICTION LOSS PER 100 FT.: 4.16 (PRESS. AVAIL. FOR FRICTION LOSS) X 100 ÷ 150 (DEVELOPED LENGTH) = 2.78 (PER 100 FT.)

PIPE SIZING per FIXTURE UNIT LOAD

2.78 P.S.I. DROP / 100 FT.			
	CW FV	CW FT	HW FT
1/2"	0	0	0
3/4"	0	4	4
1"	0	12	12
1-1/4"	0	23	23
1-1/2"	9	44	44
2"	57	146	119
2-1/2"	223	359	245
3"	--	--	--

HW 5 FPS MAX
CW 8 FPS MAX

GAS SIZING TABLE
TDL=100'

	CFH	MBH
1/2"	50	55
3/4"	104	114
1"	195	214
1-1/4"	400	440
1-1/2"	600	660
2"	1160	1216

FLUID TEMPERATURE RANGE (°F)	CONDUCTIVITY RANGE (in Btu-inch per hour per square foot per °F)	INSULATION MEAN RATING TEMPERATURE (°F)	NOMINAL PIPE DIAMETER (in inches)				
			< 1	1 to <1.5	1.5 to < 4	4 to < 8	8 and larger
			INSULATION THICKNESS REQUIRED (in inches)				
Above 350	0.32-0.34	250	4.5	5.0	5.0	5.0	5.0
251-350	0.29-0.32	200	3.0	4.0	4.5	4.5	4.5
201-250	0.27-0.30	150	2.5	2.5	2.5	3.0	3.0
141-200	0.25-0.29	125	1.5	1.5	2.0	2.0	2.0
105-140	0.22-0.28	100	1.0	1.5	1.5	1.5	1.5

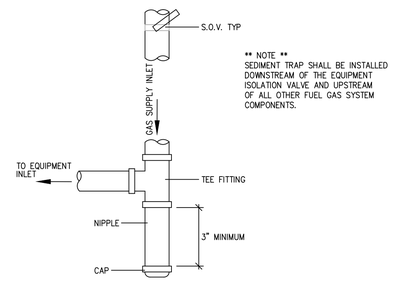

NO SCALE — GAS PIPING - SEDIMENT TRAP — 1 / P-0

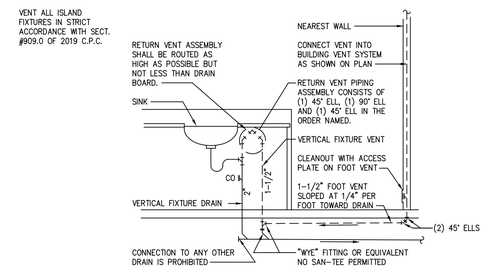

NO SCALE — ISLAND SINK WASTE / VENT PIPING — 2 / P-0

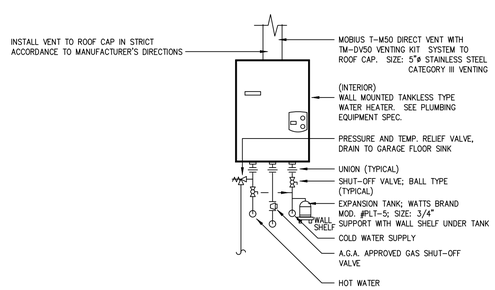

NO SCALE — TANKLESS WATER HEATER (INDOOR) — 3 / P-0

Plumbing Equipment Specification

WATER HEATER TANKLESS — BRAND: NORITZ — MOD. #: — GAS INPUT: 100,000 BTUH

REMARK: WALL MOUNTED ON EXTERIOR WALL AS SHOWN ON PLAN.
PROVIDE WITH TEMPERATURE REMOTE CONTROLLER. CONSULT OWNER'S REPRESENTATIVE FOR EXACT LOCATION OF REMOTE CONTROLLER(S).
SET DIP SWITCH ON CONTROL BOARD TO A MAX. 120° F.

*** NOTE ***
CONTRACTOR TO VERIFY EXACT SIZE, SLOPE AND LOCATION OF ALL EXISTING UTILITIES ON-SITE PRIOR TO CONSTRUCTION

PLUMBING LEGEND

#	VENT LINE & SIZE
#	WASTE LINE & SIZE (BUILDING SEWER SHALL BE LAID IN A FIRM BED OF SAND)
GW # GW	GREASE WASTE LINE & SIZE (BUILDING SEWER SHALL BE LAID IN A FIRM BED OF SAND)
#(#)	HOT WATER SUPPLY LINE SIZE(WSFU)
#(#)	COLD WATER SUPPLY LINE SIZE (WSFU)
FCW #(#) FCW	FILTERED COLD WATER SUPPLY LINE SIZE (WSFU)
G #(#) G	GAS PIPING SIZE (MBH)
	VENT LINE BELOW FLOOR
	HOT WATER SUPPLY LINE BELOW SLAB
	COLD WATER SUPPLY LINE BELOW SLAB
	CLEANOUT
	DWV, HW, CW RISER
	SHUT-OFF VALVE
	POINT OF CONNECTION (VIF)
(VIF)	VERIFY IN FIELD

LAUTERBACH & ASSOCIATES
ARCHITECTS INC.
David C. Kesterson, Architect • Ilona Scott, Architect • Mark S. Pettit, Architect
300 MONTGOMERY AVENUE, OXNARD, CALIFORNIA 93036 | 805-988-0912 | FAX 805-981-4510 | www.la-arch.com

REGISTERED PROFESSIONAL ENGINEER SHANE DENNIS No. M24632 MECHANICAL STATE OF CALIFORNIA

REGISTERED PROFESSIONAL ENGINEER SHANE DENNIS No. C70391 CIVIL STATE OF CALIFORNIA

FASHION PARK APARTMENTS
234, 251 & 257 FASHION PARK
OXNARD, CA. 93036

CITY OF OXNARD HOUSING AUTHORITY
435 S. D STREET
OXNARD, CALIFORNIA 93030

NO	DESCRIPTION	DATE
1	SUBMIT	4/8/2020

ISSUE

JOB NO. 20-190209

DRAWN BY:
CHECKED BY:
PROJECT MANAGER:
PRINT DATE: 2/15/19 8:36:51 AM

PLUMBING NOTES/ DETAILS

P-0.0

THESE DRAWINGS AND SPECIFICATIONS ARE THE PROPERTY AND COPYRIGHT OF LAUTERBACH & ASSOCIATES. ALL RIGHTS RESERVED, AND SHALL NOT BE USED ON ANY OTHER WORK OR PROJECT EXCEPT BY WRITTEN AGREEMENT WITH LAUTERBACH & ASSOCIATES. WRITTEN DIMENSIONS SHALL TAKE PRECEDENCE OVER SCALED DIMENSIONS AND SHALL BE VERIFIED ON THE JOB SITE. ANY DISCREPANCY SHALL BE BROUGHT TO THE NOTICE OF LAUTERBACH & ASSOCIATES PRIOR TO COMMENCEMENT OF ANY WORK.

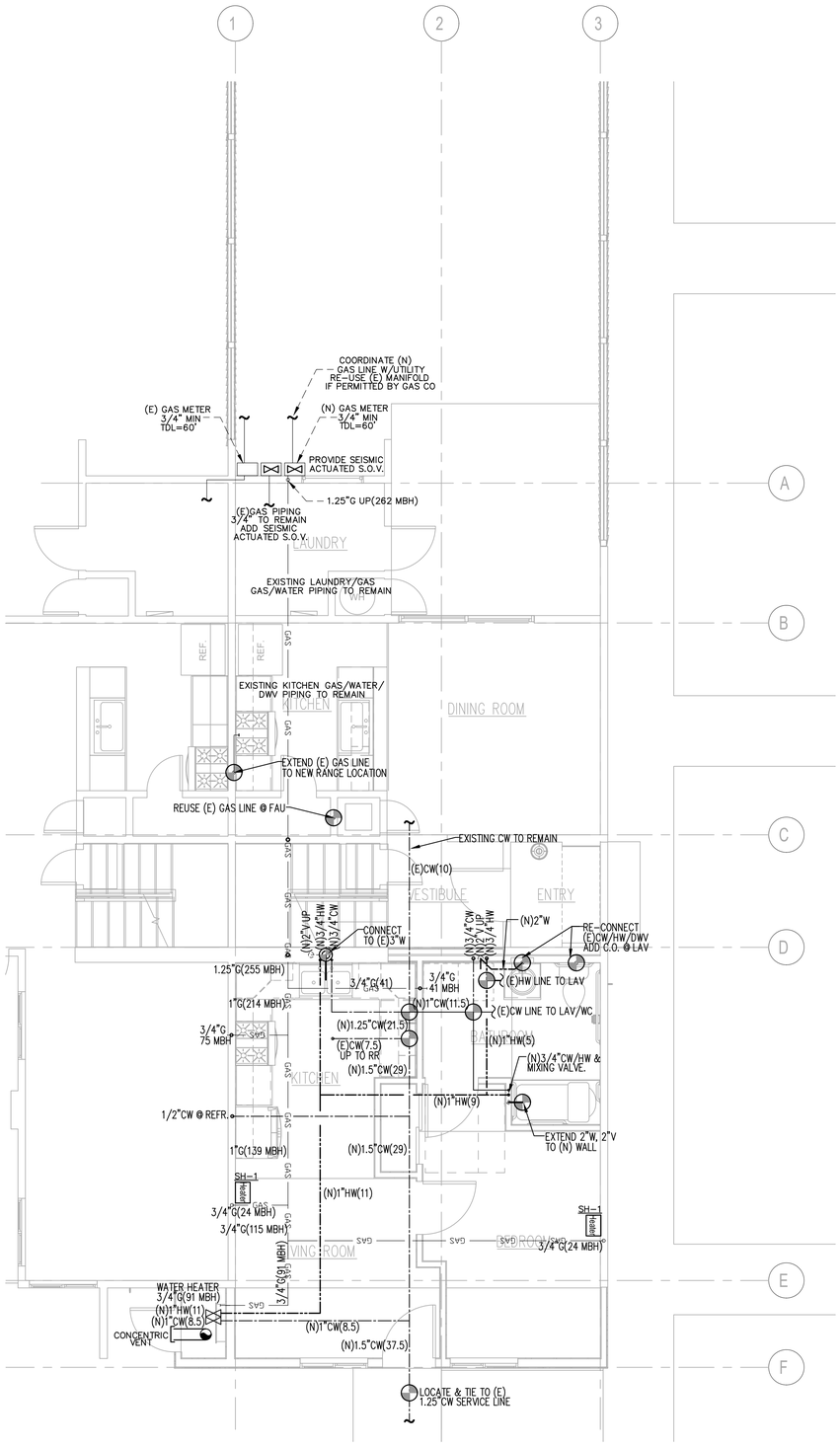

FIRST FLOOR PLUMBING PLAN

SCALE: 1/4":12"

*** NOTE ***
CONTRACTOR TO VERIFY EXACT SIZE, SLOPE AND LOCATION OF ALL EXISTING UTILITES ON-SITE PRIOR TO CONSTRUCTION

PLUMBING LEGEND

#/#	VENT LINE & SIZE
#	WASTE LINE & SIZE (BUILDING SEWER SHALL BE LAID IN A FIRM BED OF SAND)
GW #/# GW	GREASE WASTE LINE & SIZE (BUILDING SEWER SHALL BE LAID IN A FIRM BED OF SAND)
#(#)	HOT WATER SUPPLY LINE SIZE(WSFU)
#(#)	COLD WATER SUPPLY LINE SIZE (WSFU)
FCW #(#) FCW	FILTERED COLD WATER SUPPLY LINE SIZE (WSFU)
G #(#) G	GAS PIPING SIZE (MBH)
	VENT LINE BELOW FLOOR
	HOT WATER SUPPLY LINE BELOW SLAB
	COLD WATER SUPPLY LINE BELOW SLAB
	CLEANOUT
	DWV, HW, CW RISER
	SHUT-OFF VALVE
	POINT OF CONNECTION (VIF)
(VIF)	VERIFY IN FIELD

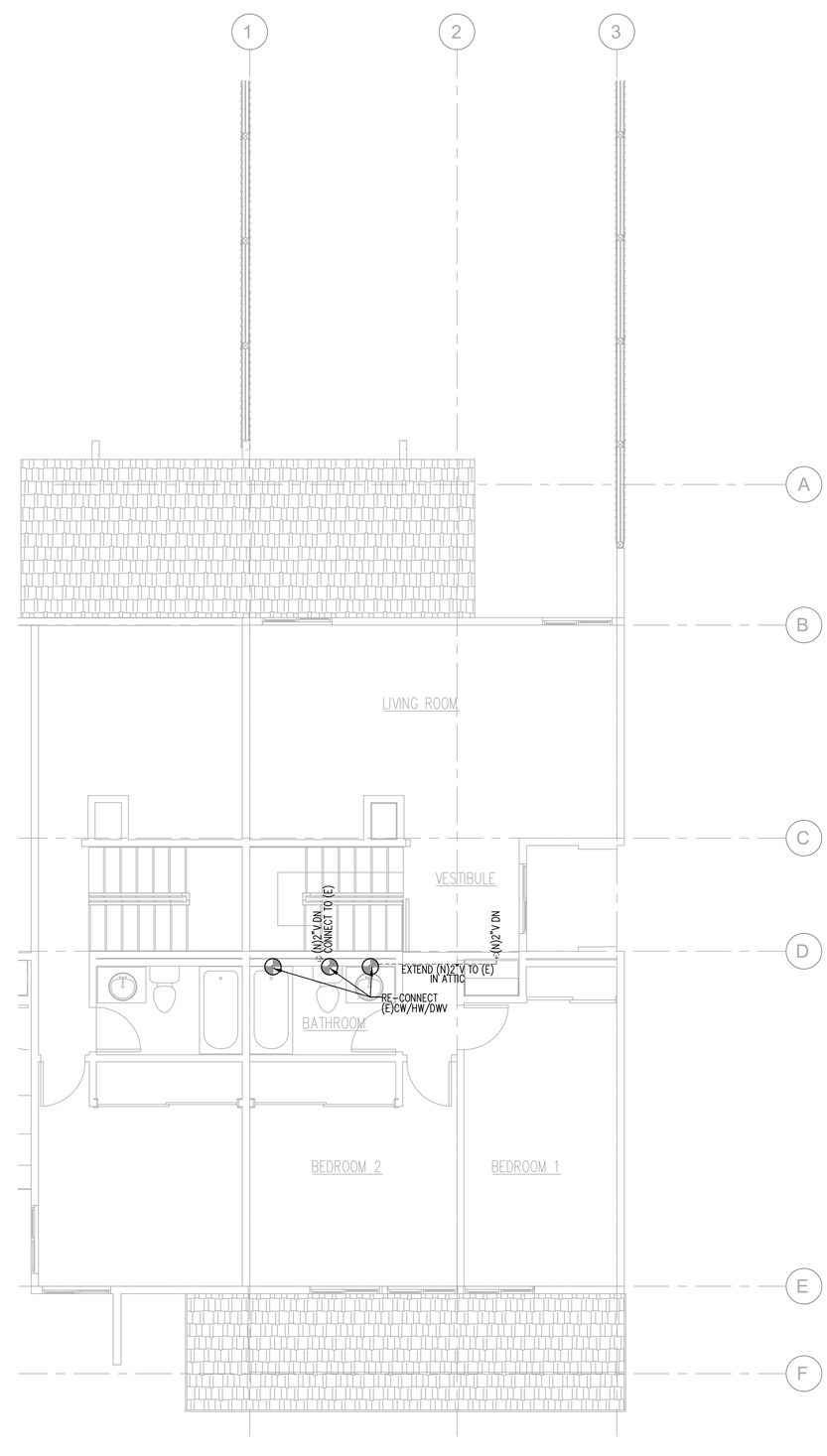

SECOND FLOOR PLUMBING PLAN

SCALE: 1/4":12"

THESE DRAWINGS AND SPECIFICATIONS ARE THE PROPERTY AND COPYRIGHT OF LAUTERBACH & ASSOCIATES. ALL RIGHTS RESERVED, AND SHALL NOT BE USED ON ANY OTHER WORK OR PROJECT EXCEPT BY WRITTEN AGREEMENT WITH LAUTERBACH & ASSOCIATES. WRITTEN DIMENSIONS SHALL TAKE PRECEDENCE OVER SCALED DIMENSIONS AND SHALL BE VERIFIED ON THE JOB SITE. ANY DISCREPANCY SHALL BE BROUGHT TO THE NOTICE OF LAUTERBACH & ASSOCIATES PRIOR TO COMMENCEMENT OF ANY WORK.

LAUTERBACH & ASSOCIATES
ARCHITECTS INC.
David C. Kesterson, Architect • Ilona Scott, Architect • Mark S. Pettit, Architect
300 MONTGOMERY AVENUE, OXNARD, CALIFORNIA 93036 | 805-988-0912 | FAX 805-981-4510 | www.la-arch.com

REGISTERED PROFESSIONAL ENGINEER SHANE DENNIS LAMB No. M34632 MECHANICAL STATE OF CALIFORNIA

REGISTERED PROFESSIONAL ENGINEER SHANE DENNIS LAMB No. C74991 CIVIL STATE OF CALIFORNIA

FASHION PARK APARTMENTS

234, 251 & 257 FASHION PARK
OXNARD, CA. 93036

CITY OF OXNARD HOUSING AUTHORITY

435 S. D STREET
OXNARD, CALIFORNIA 93030

NO	DESCRIPTION	DATE
1	SUBMIT	4/8/2020

ISSUE

JOB NO. 20-190209

DRAWN BY:
CHECKED BY:
PROJECT MANAGER:
PRINT DATE: 2/15/19 8:36:51 AM

PLUMBING PLAN

P-1.0

LED FIXTURE SCHEDULE

TYPE	MANUFACTURER AND CATALOG NUMBER	LED MODULE TYPE	LED MODULE COLOR TEMP	LED MODULE WATTS	DRIVER	OPTIC/LENS	REMARKS
A 20	JUNO JSF 13IN 18LM 30K 90CRI 120FRPC WH		3000K		FRPC	DIFFUSE	SLIM S/M 13"
B 10	JUNO JSF 5IN 07LM 30K 90CRI 120FRPC WH		3000K		FRPC	DIFFUSE	SLIM S/M 5"
C 24	TECH 700 BC BAS 24S - LED 927		2700K	24	ELECTRONIC	DIFFUSE	VANITY LIGHT

(N) PANEL SCHEDULE "A"

SERVICE: 120/240V 1Φ 3W | MAIN BKR.: MLO | BUS: 100A | LOC.: SEE PLAN | MTG.: FLUSH

REMARKS	LOAD ΦA	LOAD ΦB	REC	LTG	MISC	POLE	TRIP	CIRC		CIRC	TRIP	POLE	REC	LTG	MISC	LOAD ΦA	LOAD ΦB	REMARKS
LAUNDRY CIRCUIT	1500		2			1	20	1	*	2	20	1						GEN LTG
SMOKE DETECTORS		100			3			3		4		1						
BATHROOM CIRCUIT	500		1	1	1			5		6		1						
REFRIGERATOR		800	1					7	*	8	15	1		1				FAU
BATHROOM CIRCUIT	500		1	1	1			9		10	15	1		1				FAU
SPARE								11		12	20	1						SPARE
SMALL APPLIANCE CKT	1500							13		14								
"		1500						15		16								
EXT REC	500		1					17		18								
WH IGNITION		100			1			19		20								
SPARE								21		22								
"								23		24								

TOTAL WATTS= ΦA= ΦB=

AMPS= SEE ELECTRICAL LOAD CALCULATIONS | MINIMUM BKR | A.I.C. RATING= 10,000 AMPS SYM

* AFCI / GFCI COMBINATION CIRCUIT BREAKER | ALL CIRCUIT BREAKERS SHALL BE AFCI.

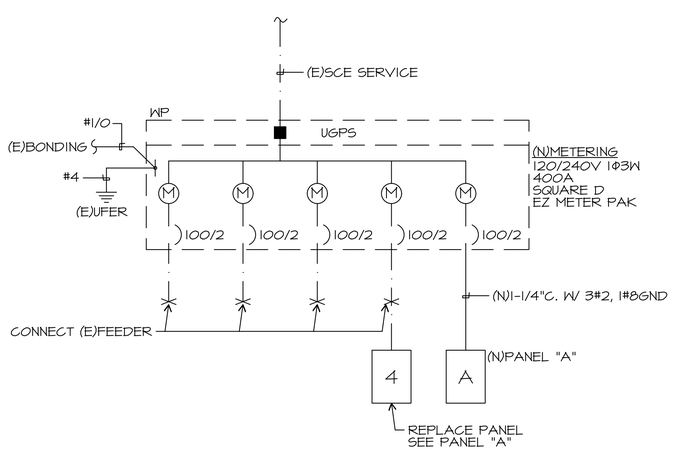

SINGLE LINE DIAGRAM

SCALE: NONE

(A)

GENERAL NOTES

1. VISIT JOB SITE AND VERIFY EXISTING CONDITIONS PRIOR TO BID.
2. THE ELECTRICAL WORK SHALL BE INSTALLED IN ACCORDANCE WITH THE CALIFORNIA ELECTRICAL CODE AND ALL APPLICABLE LOCAL ORDINANCES. WHERE PLANS CALL FOR A HIGHER STANDARD THAN APPLICABLE CODES, THE PLANS SHALL GOVERN.
3. CONDUIT RUNS ARE SHOWN DIAGRAMMATICALLY. EXACT LOCATIONS SHALL BE DETERMINED IN THE FIELD TO SUIT FIELD CONDITIONS.
4. ALL ELECTRICAL EQUIPMENT, APPLIANCES AND LIGHTING FIXTURES SHALL BE LISTED BY A RECOGNIZED TEST LAB AND BEAR THAT LABEL OF APPROVAL.
5. CONTRACTOR SHALL FURNISH, INSTALL AND CONNECT ALL MATERIAL AND EQUIPMENT FOR THIS WORK UNLESS OTHERWISE NOTED.
6. FURNISH DISCONNECT SWITCHES AT REMOTE MOTORS.
7. ALL SPACES AS INDICATED ON PANELS OR SWITCHBOARDS SHALL BE COMPLETE WITH HARDWARE AND BUSSING FOR FUTURE BREAKER OR SWITCH.
8. CHECK ARCHITECTURAL PLANS FOR DOOR SWINGS BEFORE INSTALLING SWITCH OUTLETS.
9. GROUNDING AND BONDING SHALL BE PER CODE PLUS ANY ADDITIONAL PROVISIONS SPECIFIED OR SHOWN ON DRAWINGS.
10. ALL CONDUIT RUNS SHALL CONTAIN A CODE SIZED GREEN GROUND WIRE.
11. THESE PLANS ARE NOT COMPLETE UNTIL APPROVED BY THE AUTHORITY HAVING JURISDICTION.
12. ALL FEEDER CONDUCTORS SHALL BE IN CONDUIT. BRANCH CIRCUITS MAY BE NON-METALLIC SHEATHED CABLE.
13. ALL CONDUCTORS SHALL BE COPPER WITH TYPE THHN/THWN INSULATION.
14. COORDINATE WITH SERVING ELECTRICAL UTILITY COMPANY AND MAKE PROVISIONS FOR ELECTRICAL SERVICE ACCORDINGLY. INCLUDE ALL SERVICE COSTS AND UTILITY COMPANY CHARGES IN BID.
15. COORDINATE WITH SERVING TELEPHONE UTILITY COMPANY AND MAKE PROVISIONS FOR TELEPHONE SERVICE ACCORDINGLY. INCLUDE ALL SERVICE COSTS AND ANY UTILITY COMPANY CHARGES IN BID.
16. COORDINATE WITH SERVING CABLE TELEVISION COMPANY AND MAKE PROVISIONS FOR CABLE TELEVISION ACCORDINGLY. INCLUDE ALL SERVICE COSTS AND ANY UTILITY COMPANY CHARGES IN BID.
17. ALL PERMITS SHALL BE OBTAINED AND PAID FOR BY CONTRACTOR.
18. ALL RECEPTACLES IN DWELLING UNITS SHALL BE PROTECTED BY A LISTED ARC FAULT CIRCUIT INTERRUPTER, COMBINATION TYPE PER CEC 210.12.
19. TAMPER RESISTANCE RECEPTACLE SHALL BE INSTALLED IN DWELLING UNITS PER CEC 406.11
20. SMOKE DETECTORS SHALL BE 120V, PHOTOELECTRIC/ION COMBINATION UNITS WITH BATTERY BACK UP
21. HALLWAY DETECTOR SHALL BE COMBINATION SMOKE AND CARBON MONOXIDE DETECTOR
22. VERIFY LOCATION OF FLUSH FLOOR RECEPTACLE PRIOR TO ROUGH IN
23. WP EXTERIOR RECEPTACLES SHALL HAVE HUBBEL #WL500 COVERS OR EQUAL
24. MANUFACTURER'S LITERATURE SHOWING PROPOSED LED AND/OR LOW VOLTAGE LIGHT FIXTURES ARE HIGH EFFICACY AND CALIFORNIA CERTIFIED IS TO BE ON SITE AT THE TIME OF FIELD INSPECTION.
25. WHERE BRANCH CIRCUIT WIRING IS MODIFIED, REPLACED OR EXTENDED, THE BRANCH CIRCUIT SHALL BE PROTECTED BY EITHER A LISTED COMBINATION TYPE AFCI LOCATED AT THE ORIGIN OF THE BRANCH CIRCUIT OR A LISTED OUTLET BRANCH-CIRCUIT TYPE AFCI LOCATED AT THE FIRST RECEPTACLE OF THE EXISTING BRANCH CIRCUIT.
26. ELECTRICAL EQUIPMENT FOR INDOOR ELECTRIC VEHICLE CHARGING STATIONS SHALL BE INSTALLED IN ACCORDANCE WITH CRC R331B AND THE CALIFORNIA ELECTRICAL CODE. THE ELECTRICAL SUPPLY CIRCUIT TO REQUIRED MECHANICAL EXHAUST VENTILATION EQUIPMENT SHALL BE INTERLOCKED WITH THE RECHARGING EQUIPMENT USED TO SUPPLY THE VEHICLE BEING CHARGED, AND SHALL REMAIN ENERGIZED DURING THE ENTIRE CHARGING CYCLE.
27. EXCEPT FOR DETACHED STORAGE BUILDINGS 1000 SQ. FEET OR LESS IN SIZE, PERMANENTLY INSTALLED LUMINARIES IN ROOMS OTHER THAN KITCHENS, BATHROOMS, GARAGES, LAUNDRY ROOMS, AND UTILITY ROOMS ARE TO BE HIGH EFFICACY, OR CONTROLLED BY A DIMMER SWITCH, OR CONTROLLED BY AN OCCUPANCY SENSOR THAT DOES NOT TURN ON AUTOMATICALLY OR HAVE AN ALWAYS-ON OPTION.
28. TWO MINIMUM 1" DIAMETER METALLIC CONDUITS SHALL BE PROVIDED THAT ORIGINATE AT A READILY ACCESSIBLE ATTIC LOCATION WITH PROXIMITY TO A SOLAR ZONE AREA COMPLYING WITH CALIFORNIA ENERGY CODE SECTION 110.10 AND TERMINATE AT A MINIMUM 4" ELECTRICAL PANEL. THE ELECTRICAL JUNCTION BOX AND SEGMENT OF CONDUIT RUN IN THE ATTIC SHALL BE PERMANENTLY AND VISIBLY MARKED AS "FOR FUTURE SOLAR PHOTOVOLTAIC".
29. ALL KITCHEN CIRCUITS SHALL HAVE GFCI PROTECTION.

SYMBOLS

- CONDUIT EXISTING
- CONDUIT CONCEALED IN WALL OR CEILING
- CONDUIT CONCEALED UNDER FLOOR OR BELOW GRADE
- CONDUIT STUBBED OUT AND CAPPED
- CONDUIT TURNED UP
- CONDUIT TURNED DOWN
- HATCH MARKS INDICATE NO. OF #12 WIRES IN CODE SIZED CONDUIT (3) MAX. IN 1/2" C., (5) MAX. IN 3/4" C., (8) MAX. IN 1"C., NO MARKS = 2#12
- A-3 HOME RUN: LETTER INDICATES PANEL, NUMBER(S) INDICATES CIRCUIT(S).
- SAWCUT
- GROUND CONNECTION
- DISTRIBUTION SWITCHBOARD OR PANEL
- PANEL, BRANCH CIRCUIT TYPE, SURFACE AND FLUSH
- SIGNAL TERMINAL CABINET, SURFACE & FLUSH
- FLUORESCENT FIXTURE
- 2 a OUTLET DATA: BAR INDICATES WALL MOUNT, LETTER INDICATES SWITCH CONTROL, NO. INDICATES CIRCUIT.
- SURFACE FIXTURE ON FLUSH OUTLET.
- RECESSED FIXTURE WITH JUNCTION BOX FOR THRU WIRING
- EXIT LIGHT WITH ARROWS AS SHOWN ON PLANS, WALL AND CEILING MOUNT.
- LOW LEVEL EXIT SIGN, +6" AFF, +4" FROM DOOR JAMB
- A 100 LIGHT FIXTURE DESIGNATION, LETTER INDICATES TYPE, NO. INDICATES WATTAGE. SEE FIXTURE SCHEDULE.
- FC 1 MECHANICAL EQUIPMENT DESIGNATION. SEE MECHANICAL DRAWINGS.
- SPECIAL RECEPTACLE - SEE PLAN
- M METER
- FLUSH FLOOR RECEPTACLE
- RECEPTACLE, DUPLEX, 15A, 125V, NEMA 5-15R +18" U.N.O.
- DUPLEX RECEPTACLE MTD. ABOVE BACKSPLASH
- DUPLEX RECEPTACLE W/LOWER HALF SWITCHED
- GFI GROUND FAULT CIRCUIT INTERRUPTING RECEPTACLE
- DOUBLE DUPLEX RECEPTACLE
- CEILING RECEPTACLE
- RECEPTACLE, DUPLEX, 20A, 125V, NEMA 5-20R +18" U.N.O.
- JUNCTION BOX 4" SQUARE, 1-1/2" DEEP U.N.O.
- T THERMOSTAT F.B.O. +48"
- 2 MOTOR, NO. INDICATES HORSEPOWER
- CLOCK OUTLET +7'-6" U.N.O.
- DISCONNECT SWITCH, NON-FUSED
- F DISCONNECT SWITCH FUSED HORSEPOWER RATED OR SIZED AS NOTED
- COMBINATION MAGNETIC STARTER WITH DISCONNECT SWITCH AND FUSES
- MAGNETIC MOTOR STARTER W/OVERLOADS IN EACH PHASE
- D DIMMER W/INTEGRAL "ON-OFF" SW.
- PUSHBUTTON
- PC PHOTOCELL
- SD SMOKE DETECTOR
- TELEPHONE/COMPUTER/DATA OUTLET, TWO GANG BOX W/1 GANG COVERPLATE & GROMMETED OPENING +18" U.N.O.
- CABLE TV OUTLET +18" U.N.O.
- M MOTION SENSOR
- $ EXISTING SWITCH
- S SINGLE POLE SWITCH
- ^{2} DOUBLE POLE SWITCH
- ^{3} THREE WAY SWITCH
- ^{P} SWITCH W/PILOT LT.

(QUIET TOGGLE TYPE RATED AT 20A 120/277V A.C. +48" U.N.O.)

- ^{M} MANUAL MOTOR STARTER

FACP	FIRE ALARM CONTROL PANEL
GFI	GROUND FAULT CIRCUIT INTERRUPTING
LST	LABOR SAVING TANDEM
MLO	MAIN LUGS ONLY
w/	WITH
C.O.	CONDUIT ONLY
W.P.	WEATHERPROOF
F.B.O.	FURNISHED BY OTHERS, INSTALL & CONNECT
U.N.O.	UNLESS NOTED OTHERWISE
N.E.C.	NATIONAL ELECTRICAL CODE
N.I.C.	NOT IN CONTRACT
(E)	EXISTING
(N)	NEW
(R)	REMOVE
(RL)	RELOCATE
S/M	SURFACE MOUNT
U/G	UNDERGROUND
CWP	COLD WATER PIPE
AFF	ABOVE FINISHED FLOOR
HACR	HEATING AND AIR CONDITIONING RATED CIRCUIT
N.L.	NIGHT LIGHT

NOTE: NOT ALL SYMBOLS SHOWN ARE USED ON THIS PROJECT.

JMPE
ELECTRICAL ENGINEERING
LIGHTING DESIGN
CA REGISTRATION NO E13083
19531
627 OLIVE STREET
SANTA BARBARA CA 93101
(805) 569-9216
FAX (805) 569-2405
email : maloney@jmpe.net
www.jmpe.net

LICENSED PROFESSIONAL ENGINEER
JAMES M. MALONEY
No. E013083
Exp. 06/30/2021
ELECTRICAL
STATE OF CALIFORNIA

Project Architect
LAUTERBACH & ASSOCIATES
ARCHITECTS INC.
David C. Kesterson, Architect • Ilona Scott, Architect • Mark S. Pettit, Architect
300 MONTGOMERY AVENUE, OXNARD, CALIFORNIA 93036 | 805-988-0912 | FAX 805-981-4510 | www.la-arch.com

LICENSED ARCHITECT
ILONA SCOTT
No. C11881
Ren. 06/21
STATE OF CALIFORNIA

FASHION PARK APARTMENTS

234, 251 & 257 FASHION PARK
OXNARD, CA, 93036

CITY OF OXNARD HOUSING AUTHORITY

435 S. D STREET
OXNARD, CALIFORNIA 93030

NO	DESCRIPTION	DATE
1	SUBMIT	02-26-2020

ISSUE

JOB NO. 20-190209

DRAWN BY: -
CHECKED BY: -
PROJECT MANAGER: -
PRINT DATE:

GENERAL NOTES, SYMBOLS & DETAILS

E-001

THESE DRAWINGS AND SPECIFICATIONS ARE THE PROPERTY AND COPYRIGHT OF LAUTERBACH & ASSOCIATES, ALL RIGHTS RESERVED, AND SHALL NOT BE USED ON ANY OTHER WORK OR PROJECT EXCEPT BY WRITTEN AGREEMENT WITH LAUTERBACH & ASSOCIATES. WRITTEN DIMENSIONS SHALL TAKE PRECEDENCE OVER SCALED DIMENSIONS AND SHALL BE VERIFIED ON THE JOB SITE. ANY DISCREPANCY SHALL BE BROUGHT TO THE NOTICE OF LAUTERBACH & ASSOCIATES PRIOR TO COMMENCEMENT OF ANY WORK.

File Path

STATE OF CALIFORNIA

LIGHTING – MULTI FAMILY DWELLINGS

CEC-CF2R-LTG-02-E (Revised 01/20) CALIFORNIA ENERGY COMMISSION

CERTIFICATE OF INSTALLATION		CF2R-LTG-02-E
Lighting – Multi-Family Dwellings		(Page 1 of 4)
Project Name: FASHION PARK	Enforcement Agency:	Permit Number:
Dwelling Address:	City:	Zip Code:

A. Installed Lighting and Controls
Select Yes or No according to whether your work on the project includes each of the following types of lighting and controls.
See Section B. thru N. for applicable compliance requirements.

		Y or N
01	High efficacy luminaires installed in any interior rooms. (See Section B.)	
02	JA8 compliant luminaires and controls installed in any interior rooms. (See Section B.)	
03	Recessed downlight luminaires in ceilings in any interior rooms. (See Section C.)	
04	Screw-based luminaires installed in any interior rooms. (See Section D.)	
05	Enclosed or recessed luminaires installed in any interior rooms. (See Section D.)	
06	Lighting and controls in bathrooms. (See Section E.)	
07	Lighting and controls in laundry rooms. (See Section E.)	
08	Lighting and controls in utility rooms. (See Section E.)	
09	Lighting and controls in garage. (See Section E.)	
10	Outdoor lighting and controls. (See Section H. & I.)	
11	Blank electrical boxes installed more than 5 feet from finished floor. (See Section F.)	
12	Internally illuminated address signs. (See Section G.)	
13	Parking Garages. (See Section J.)	
14	Parking lots or carports. (See Section H. & I.)	
15	Common areas. See (Section K. & L.)	

B. High Efficacy Luminaires and Controls

01	150.0(k)1A and Table 150.0-A: All luminaires are installed with: • Light sources of one of the lighting technologies specified under the "High Efficacy" column of TABLE 150.0-A; or • JA8 compliant light sources and the light sources are marked with a label reading "JA8-2019" or "JA8-2019-E".
02	150.0(k)2J: Dimming controls for all luminaires with dimmable JA8 compliant light sources except for those controlled by occupancy or vacancy sensors.
03	150.0(k)2A: Forward phase cut dimmers used with LED light sources shall comply with NEMA SSL 7A.

The responsible person's signature on this compliance document affirms that all applicable requirements in this table have been met.

C. Recessed Downlight Luminaires in Ceilings

01	150.0(k)1Cv: Do not contain screw based sockets.
02	The luminaire shall be marked with "JA8-2019".
03	150.0(k)1Ci: Listed for zero clearance insulation contact (IC).
04	150.0(k)1Cii: Has label certifying air tight.
05	150.0(k)1Ciii: Sealed with a gasket or caulk between the luminaire housing and ceiling, and all air leakage paths between conditioned and unconditioned spaces are sealed with a gasket or caulk.
06	150.0(k)1Civ: Allows ballast maintenance and replacement to be readily accessible to building occupants from below the ceiling without requiring the cutting of holes in the ceiling.

The responsible person's signature on this compliance document affirms that all applicable requirements in this table have been met.

D. Additional Luminaire Requirements

01	150.0(k)1G: **Screw based luminaires** are installed with all of the following requirements: • The luminaire is not recessed downlight luminaire in ceilings; and • The luminaires are installed with lamps or light sources marked with "JA8-2019"..
02	150.0(k)1H: **Enclosed or Recessed Luminaires** are installed with lamps or other separable light sources marked with "JA8-2019-E".
03	150.0(k)1D: Ballasts for fluorescent lamps rated 13 Watts or greater are electronic.
04	150.0(k)1E: Night lights**, step lights and path lights** are rated to consume no more than 5 Watts of power and emit more than 150 lumens, or in compliance with Table 150.0-A, or controlled, or controlled by vacancy sensors.
05	150.0(k)1F: **Lighting integral to exhaust fans** meets the requirements of Table 150.0-A, with exception to the lighting installed by the manufacturer in kitchen exhaust hoods.

The responsible person's signature on this compliance document affirms that all applicable requirements in this table have been met.

E. Additional Lighting Controls

01	150.0(k)2J: In **bathrooms, garages, laundry rooms, and utility rooms**, at least one luminaire in each of these spaces is controlled by an

Registration Number: Registration Date/Time: HERS Provider:
CA Building Energy Efficiency Standards - 2019 Residential Compliance January 2020

STATE OF CALIFORNIA

LIGHTING – MULTI FAMILY DWELLINGS

CEC-CF2R-LTG-02-E (Revised 01/20) CALIFORNIA ENERGY COMMISSION

CERTIFICATE OF INSTALLATION		CF2R-LTG-02-E
Lighting – Multi-Family Dwellings		(Page 2 of 4)
Project Name: FASHION PARK	Enforcement Agency:	Permit Number:
Dwelling Address:	City:	Zip Code:

	occupant or vacancy sensor providing automatic-off functionality.
02	150.0(k)2B: **Exhaust fans** are controlled separately from lighting systems, or the lighting can be turned OFF on the same control as the fan.
03	150.0(k)2C: Lighting has readily accessible wall-mounted controls that allow the lighting to be manually turned ON and OFF.
04	150.0(k)2D: Lighting controls and equipment are installed in accordance with manufacturer's instructions
05	150.0(k)2E: No controls bypasses a dimmer, occupancy sensor or vacancy sensor function where that dimmer or sensor has been installed to comply with Section 150.0(k)
06	150.0(k)2F: Lighting controls comply with the applicable requirements in Section 110.9.
07	150.0(k)2G: **Energy Management Control Systems** used to comply with control requirements provide the functionality of the specified control in accordance with Section 110.9, meet the installation certificate requirements in Section 130.4, meets the EMCS requirements in Section 130.5, and comply with all other applicable requirements in Section 150.0(k)2.
08	150.0(k)2H: A **multi-scene programmable controller** used to comply with dimmer requirements provides the functionality of a dimmer in accordance with Section 110.9, and complies with all other applicable requirements in Section 150.0(k)2.
09	150.0(k)2K: **Undercabinet lighting** is controlled separately from ceiling installed lighting.

The responsible person's signature on this compliance document affirms that all applicable requirements in this table have been met.

F. Blank Electrical Boxes

01	150.0(k)1B: The number of blank electrical boxes installed more than 5 feet above the finished floor and do not contain a luminaire or other device, are not greater than the number of bedrooms. The blank boxes are served by a dimmer, a vacancy sensor or fan speed control.

The responsible person's signature on this compliance document affirms that all applicable requirements in this table have been met.

G. Address Signs

01	150.0(k)4: Internally illuminated address signs. Internally illuminated address signs shall either: • Comply with Section 140.8. Applicable nonresidential sign lighting compliance forms shall also be submitted, or • Consume no more than 5 watts of power.

The responsible person's signature on this compliance document affirms that all applicable requirements in this table have been met.

H. For Low-rise Multi-family Residential Buildings with four or more dwelling units, Outdoor Lighting for Private Patios, Entrances, Balconies, Porches, Residential parking lots, and Carports with less than 8 vehicles per site shall comply with requirements in Box 01 or Box 02 below.

01	150.0(k)3Bi: Outdoor lighting is controlled by a manual ON and OFF switch that permits one of the following automatic actions: • Controlled by a photocell and either a motion sensor or an automatic time switch control; or • Controlled by an astronomical time clock control; Control that override to ON shall not be allowed unless the override automatically returns the automatic control to its normal operation within 6 hours. An energy management control that provides the specified lighting control functionality and complies with all requirements applicable to the specified controls may be used to meet the above requirements.
02	150.0(k)3Bii: Outdoor lighting complies with the applicable requirements in Sections 110.9, 130.0, 130.2, 130.4, 140.7, and 141.0. Applicable LTO forms shall also be submitted.

The responsible person's signature on this compliance document affirms that all applicable requirements in this table have been met.

I. For Low-rise Multifamily Buildings with Four or More Dwelling Units, Outdoor Lighting for Residential Parking Lots or Carports with Eight or More Vehicles per site shall comply with requirements in Box 01 below

01	150.0(k)3C: Outdoor lighting complies with the applicable requirements in Sections 110.9, 130.0, 130.2, 130.4, 140.7, and 141.0. Applicable LTO forms shall be submitted.

The responsible person's signature on this compliance document affirms that all applicable requirements in this table have been met.

J. Lighting for Residential Garages for Eight or More Vehicles

01	150.0(k)5: Lighting complies with the applicable requirements for nonresidential garages in Sections 110.9, 130.0, 130.1, 130.4, 140.6, and 141.0. Applicable LTG forms shall also be submitted.

The responsible person's signature on this compliance document affirms that all applicable requirements in this table have been met.

K. Lighting for Interior Common Areas (≤ 20%) of Low-rise Multi-family

Registration Number: Registration Date/Time: HERS Provider:
CA Building Energy Efficiency Standards - 2019 Residential Compliance January 2020

STATE OF CALIFORNIA

LIGHTING – MULTI FAMILY DWELLINGS

CEC-CF2R-LTG-02-E (Revised 01/20) CALIFORNIA ENERGY COMMISSION

CERTIFICATE OF INSTALLATION		CF2R-LTG-02-E
Lighting – Multi-Family Dwellings		(Page 3 of 4)
Project Name: FASHION PARK	Enforcement Agency:	Permit Number:
Dwelling Address:	City:	Zip Code:

01	150.0(k)6A: Installed lighting shall comply with Table 150.1-A and be controlled by an occupancy sensor.

The responsible person's signature on this compliance document affirms that all applicable requirements in this table have been met.

L. Lighting for Interior Common Areas (> 20%) of Low-rise Multi-family

01	150.0(k)6Bi: Installed lighting shall comply with the applicable requirements in Sections 110.9, 130.0, 130.1, 140.6, and 141.0. Applicable nonresidential lighting compliance (NRCC-LTG) forms shall also be submitted.
02	150.0(k)6Bii: Lighting installed in corridors and stairwells is controlled by occupant sensors that reduce the lighting power by at least 50% and capable of turning light fully on and off from paths of ingress and egress.

The responsible person's signature on this compliance document affirms that all applicable requirements in this table have been met.

Registration Number: Registration Date/Time: HERS Provider:
CA Building Energy Efficiency Standards - 2019 Residential Compliance January 2020

STATE OF CALIFORNIA

LIGHTING – MULTI FAMILY DWELLINGS

CEC-CF2R-LTG-02-E (Revised 01/20) CALIFORNIA ENERGY COMMISSION

CERTIFICATE OF INSTALLATION		CF2R-LTG-02-E
Lighting – Multi-Family Dwellings		(Page 4 of 4)
Project Name: FASHION PARK	Enforcement Agency:	Permit Number:
Dwelling Address:	City:	Zip Code:

DOCUMENTATION AUTHOR'S DECLARATION STATEMENT

1. I certify that this Certificate of Installation documentation is accurate and complete.

Documentation Author Name:	Documentation Author Signature:
Documentation Author Company Name:	Date Signed:
Address:	CEA/HERS Certification Identification (if applicable):
City/State/Zip:	Phone:

RESPONSIBLE PERSON'S DECLARATION STATEMENT

I certify the following under penalty of perjury, under the laws of the State of California:

1. The information provided on this Certificate of Installation is true and correct.
2. I am either: a) a responsible person eligible under Division 3 of the Business and Professions Code in the applicable classification to accept responsibility for the system design, construction, or installation of features, materials, components, or manufactured devices for the scope of work identified on this Certificate of Installation, and attest to the declarations in this statement, or b) I am an authorized representative of the responsible person and attest to the declarations in this statement on the responsible person's behalf.
3. The constructed or installed features, materials, components or manufactured devices (the installation) identified on this Certificate of Installation conforms to all applicable codes and regulations and the installation conforms to the requirements given on the Certificate of Compliance, plans, and specifications approved by the enforcement agency.
4. I will ensure that a registered copy of this Certificate of Installation shall be posted or made available with the building permit(s) issued for the building, and made available to the enforcement agency for all applicable inspections. I understand that a registered copy of this Certificate of Installation is required to be included with the documentation the builder provides to the building owner at occupancy.

Responsible Builder/Installer Name:	Responsible Builder/Installer Signature:	
Company Name: (Installing Subcontractor or General Contractor or Builder/Owner)	Position With Company (Title):	
Address:	CSLB License:	
City/State/Zip:	Phone:	Date Signed:

Registration Number: Registration Date/Time: HERS Provider:
CA Building Energy Efficiency Standards - 2019 Residential Compliance January 2020

CERTIFICATE OF INSTALLATION – USER INSTRUCTIONS	CF2R-LTG-02-E
Lighting – Multi-Family Dwellings	(Page 1 of 2)

CF2R-LTG-02-E User Instructions

There are two version of the residential lighting Certificate of Installation. This version, the CF2R-LTG-02-E, is used for demonstrating compliance with the residential lighting Standards for low-rise multi-family dwellings.

The other version of the lighting Certificate of Installation, the CF2R-LTG-01-E, is used for demonstrating compliance with the residential lighting Standards for single family dwellings. The LTG-01 shall also be used to demonstrate compliance with the residential lighting requirements for high-rise residential dwelling units; outdoor lighting that is attached to a high-rise residential or hotel/motel building, and is separately controlled from the inside of a dwelling unit or guest room; fire station dwelling accommodations; hotel and motel guest rooms; and, dormitory and senior housing dwelling accommodations.

The primary difference between the LTG-02 and LTG-01 is that the LTG-02 includes additional requirements for demonstrating compliance with residential outdoor lighting, and common areas associated with low-rise multi-family dwelling unit.

Each dwelling unit shall separately comply with all of the applicable residential lighting Standards. Note that rooms and areas that are not within a dwelling unit shall comply with the nonresidential lighting Standards, and the nonresidential lighting compliance documents must also be submitted.

Section A. Checklist for Lighting and Controls Installed at this Site
This table is used to identify the scope of work being covered by the responsible person signing this document. One person may be responsible for all of the measures in this table, or several people may each be responsible for only a portion of the measures. If several people are responsible, each person must separately fill out this Certificate of Installation for those measures for which they are responsible. In some situations, such as for alterations and additions, only some of the measures may be included in the total scope of work.

For rows 1 through 14 – insert 'Y' for each measure that is included in the scope of work, and insert 'N' for each measure that is not included in the scope of work.

Section B. High Efficacy Luminaires and Controls
This table is a list of mandatory requirements high efficacy luminaires.

Section C. Recessed Downlight Luminaires in Ceilings
This table is a list of mandatory requirements for recessed downlight luminaires.

Section D. Additional Luminaire Requirements
This table is a list of additional requirements for luminaires.

Section E. Additional Lighting Controls
This table is a list of additional requirements for lighting controls.

Section F. Blank Electrical Boxes
This table is a list of mandatory requirements for blank electrical boxes.

Section G. Address Signs
This table is a list of mandatory requirements for address signs.

Section H. For Low-rise Multi-family Residential Buildings, Outdoor Lighting for Private Patios, Entrances, Balconies, Porches, residential parking lots and carports with less than 8 vehicles per site
This table is a list of mandatory requirements for low-rise multi-family residential buildings, outdoor lighting for private patios, entrances, balconies and porches.

Section I. For Low-rise Multi-family Buildings with Four or More Dwelling Units, Outdoor Lighting for Residential Parking Lots or Carports with Eight or More Vehicles
This table is a list of mandatory requirements for low-rise multi-family buildings with four or more dwelling units, outdoor lighting for other than private patios, entrances, balconies, porches, or for other than residential parking lots and residential carports with eight or more vehicles.

Section J. Lighting for Residential Garages with Eight or More Vehicles
This table is a list of mandatory requirements for lighting for residential garages with eight or more vehicles.

Section K. Lighting for Interior Common Areas (≤ 20%) for Low-rise Multi-family

CA Building Energy Efficiency Standards - 2019 Residential Compliance January 2020

CERTIFICATE OF INSTALLATION – USER INSTRUCTIONS	CF2R-LTG-02-E
Lighting – Multi-Family Dwellings	(Page 2 of 2)

This table is a list of mandatory requirements for lighting for interior common areas (≤ 20%) for low-rise multi-family.

Section L. Lighting for Interior Common Areas (> 20%) for Low-rise Multi-family
This table is a list of mandatory requirements for lighting for interior commons areas (> 20%) for low-rise multi-family.

CA Building Energy Efficiency Standards - 2019 Residential Compliance January 2020

For information and data collection only. Not valid until registered with a HERS provider

JMPE
ELECTRICAL ENGINEERING
LIGHTING DESIGN
CA REGISTRATION NO E13083
19531
627 OLIVE STREET
SANTA BARBARA CA 93101
(805) 569-9216
FAX (805) 569-2405
email : maloney@jmpe.net
www.jmpe.net

REGISTERED PROFESSIONAL ENGINEER
JOHN MALONEY
No. E013083
EXP. 06/30/2021
ELECTRICAL
STATE OF CALIFORNIA

THESE DRAWINGS AND SPECIFICATIONS ARE THE PROPERTY AND COPYRIGHT OF LAUTERBACH & ASSOCIATES, ALL RIGHTS RESERVED, AND SHALL NOT BE USED ON ANY OTHER WORK OR PROJECT EXCEPT BY WRITTEN AGREEMENT WITH LAUTERBACH & ASSOCIATES. WRITTEN DIMENSIONS SHALL TAKE PRECEDENCE OVER SCALED DIMENSIONS AND SHALL BE VERIFIED ON THE JOB SITE, ANY DISCREPANCY SHALL BE BROUGHT TO THE NOTICE OF LAUTERBACH & ASSOCIATES PRIOR TO COMMENCEMENT OF ANY WORK.

Project Architect
LAUTERBACH & ASSOCIATES
A R C H I T E C T S • I N C.
David C. Kesterson, Architect • Ilona Scott, Architect • Mark S. Pettit, Architect
300 MONTGOMERY AVENUE, OXNARD, CALIFORNIA 93036 | 805-988-0912 | FAX 805-981-4510 | www.la-arch.com

LICENSED ARCHITECT
ILONA SCOTT
No. C11881
Ren. 06/21
STATE OF CALIFORNIA

FASHION PARK APARTMENTS
234, 251 & 257 FASHION PARK
OXNARD, CA, 93036

CITY OF OXNARD HOUSING AUTHORITY
435 S. D STREET
OXNARD, CALIFORNIA 93030

NO	DESCRIPTION	DATE
1	SUBMIT	02-26-2020

ISSUE

JOB NO. 20-190209

DRAWN BY: -
CHECKED BY: -
PROJECT MANAGER: -
PRINT DATE:

RESIDENTIAL LIGHTING COMPLIANCE FORMS

E-002

File Path

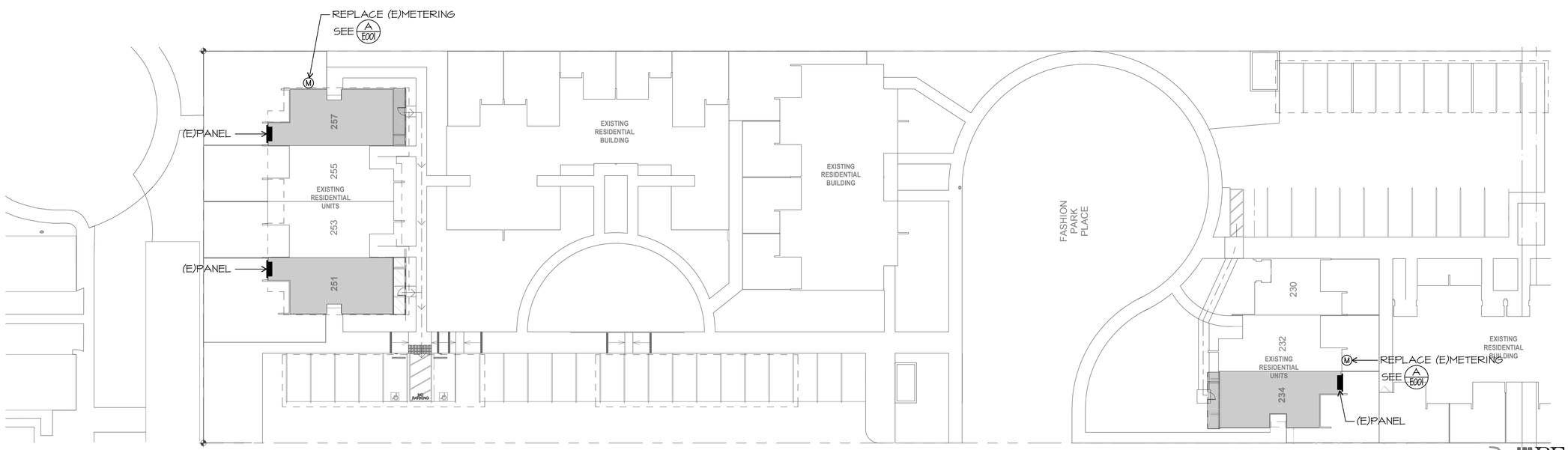

ELECTRICAL SITE PLAN

SCALE: 1" = 20'-0"

0 5 10 20 40

JMPE
ELECTRICAL ENGINEERING
LIGHTING DESIGN
CA REGISTRATION NO E13083
19531
627 OLIVE STREET
SANTA BARBARA CA 93101
(805) 569-9216
FAX (805) 569-2405
email : maloney@jmpe.net
www.jmpe.net

LICENSED PROFESSIONAL ENGINEER
JOHN MALONEY
No. E013083
EXP. 06/30/202
ELECTRICAL
STATE OF CALIFORNIA

NO	DESCRIPTION	DATE
1	SUBMIT	02-26-2020

ISSUE

JOB NO. 20-190209

DRAWN BY: -
CHECKED BY: -
PROJECT MANAGER: -
PRINT DATE:

ELECTRICAL SITE PLAN

E-003

Project Architect
LAUTERBACH & ASSOCIATES
ARCHITECTS INC.
David C. Kesterson, Architect • Ilona Scott, Architect • Mark S. Pettit, Architect
300 MONTGOMERY AVENUE, OXNARD, CALIFORNIA 93036 | 805-988-0912 | FAX 805-981-4510 | www.la-arch.com

LICENSED ARCHITECT
ILONA SCOTT
No. C11881
Ren. 06/21
STATE OF CALIFORNIA

FASHION PARK APARTMENTS
234, 251 & 257 FASHION PARK
OXNARD, CA, 93036

CITY OF OXNARD HOUSING AUTHORITY
435 S. D STREET
OXNARD, CALIFORNIA 93030

THESE DRAWINGS AND SPECIFICATIONS ARE THE PROPERTY AND COPYRIGHT OF LAUTERBACH & ASSOCIATES. ALL RIGHTS RESERVED, AND SHALL NOT BE USED ON ANY OTHER WORK OR PROJECT EXCEPT BY WRITTEN AGREEMENT WITH LAUTERBACH & ASSOCIATES. WRITTEN DIMENSIONS SHALL TAKE PRECEDENCE OVER SCALED DIMENSIONS AND SHALL BE VERIFIED ON THE JOB SITE. ANY DISCREPANCY SHALL BE BROUGHT TO THE NOTICE OF LAUTERBACH & ASSOCIATES PRIOR TO COMMENCEMENT OF ANY WORK.

File Path

ELECTRICAL DEMOLITION NOTES

1. ON WALLS TO BE REMOVED, REMOVE ALL CONDUIT, WIRE, BOXES, FITTINGS + DEVICES COMPLETE.
2. WHERE REMOVED DEVICES SERVE DOWNSTREAM ONES TO REMAIN, RECONNECT THESE.

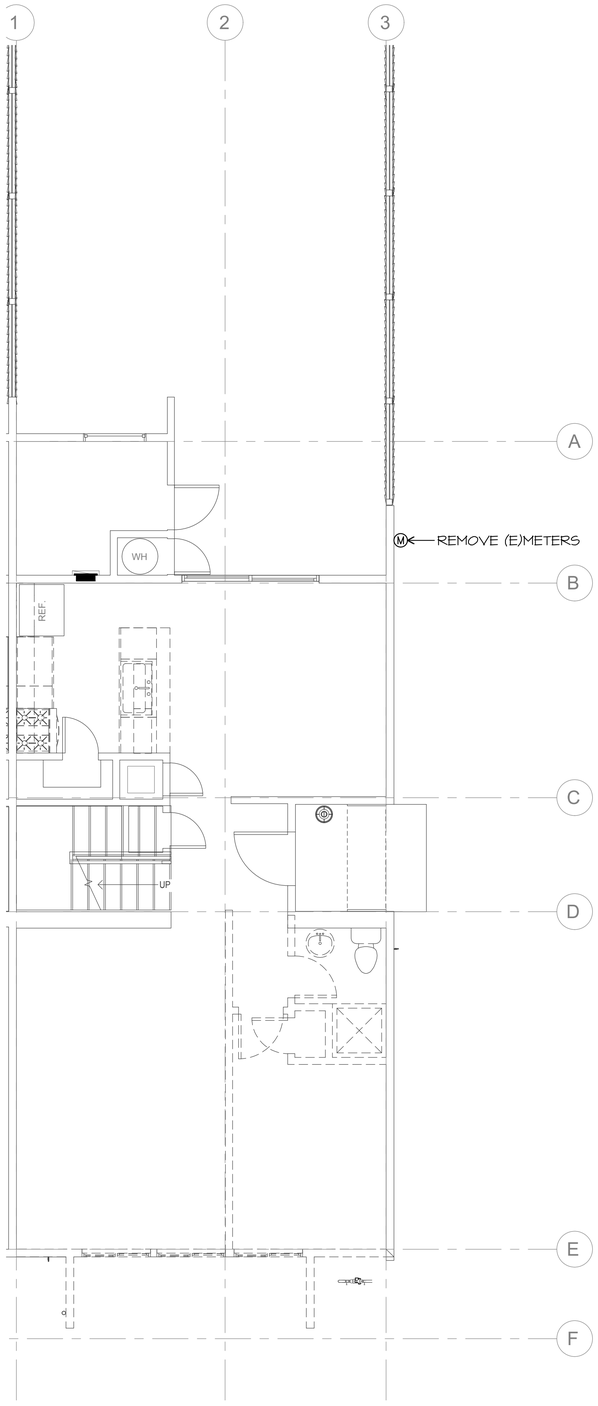

1 FIRST FLOOR DEMOLITION PLAN

SCALE: 1/4" = 1'-0"

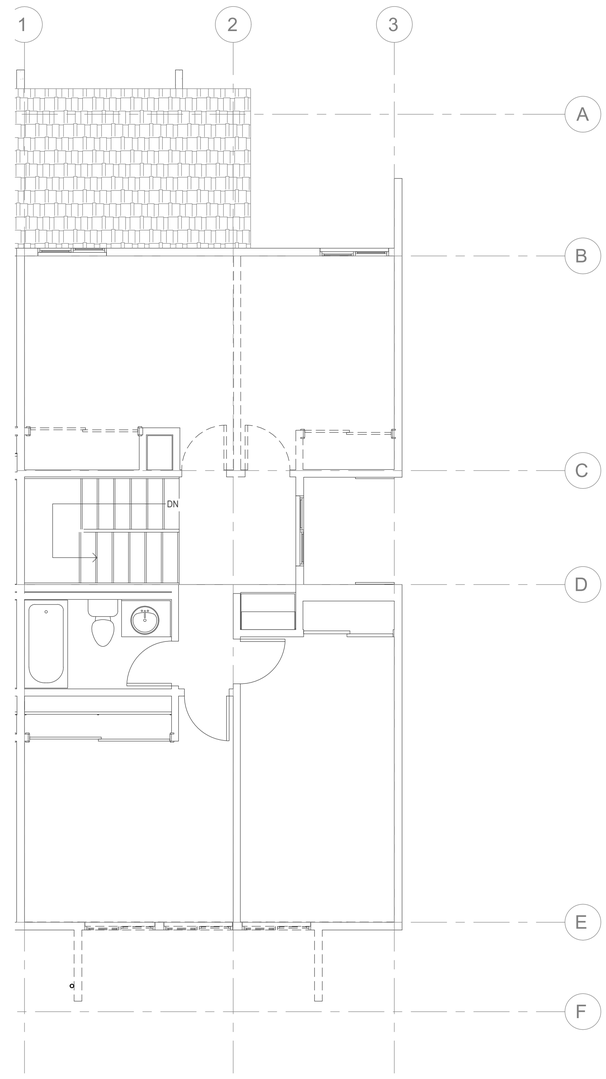

2 SECOND FLOOR DEMOLITION PLAN

SCALE: 1/4" = 1'-0"

JMPE
ELECTRICAL ENGINEERING
LIGHTING DESIGN
CA REGISTRATION NO E13083
19531
627 OLIVE STREET
SANTA BARBARA CA 93101
(805) 569-9216
FAX (805) 569-2405
email : maloney@jmpe.net
www.jmpe.net

LICENSED PROFESSIONAL ENGINEER
MARK ALOYSIUS MALONEY
E013083
EXP. 06/30/2022
ELECTRICAL
STATE OF CALIFORNIA

Project Architect
LAUTERBACH & ASSOCIATES
ARCHITECTS INC.
David C. Kesterson, Architect • Ilona Scott, Architect • Mark S. Pettit, Architect
300 MONTGOMERY AVENUE, OXNARD, CALIFORNIA 93036 | 805-988-0912 | FAX 805-981-4510 | www.la-arch.com

LICENSED ARCHITECT
ILONA SCOTT
No. C11881
Ren. 06/21
STATE OF CALIFORNIA

FASHION PARK APARTMENTS

234, 251 & 257 FASHION PARK
OXNARD, CA, 93036

CITY OF OXNARD HOUSING AUTHORITY

435 S. D STREET
OXNARD, CALIFORNIA 93030

NO	DESCRIPTION	DATE
1	SUBMIT	02-26-2020

ISSUE

JOB NO.	20-190209
DRAWN BY:	-
CHECKED BY:	-
PROJECT MANAGER:	-
PRINT DATE:	

ELECTRICAL DEMOLITION PLANS

E-101

THESE DRAWINGS AND SPECIFICATIONS ARE THE PROPERTY AND COPYRIGHT OF LAUTERBACH & ASSOCIATES, ALL RIGHTS RESERVED, AND SHALL NOT BE USED ON ANY OTHER WORK OR PROJECT EXCEPT BY WRITTEN AGREEMENT WITH LAUTERBACH & ASSOCIATES. WRITTEN DIMENSIONS SHALL TAKE PRECEDENCE OVER SCALED DIMENSIONS AND SHALL BE VERIFIED ON THE JOB SITE. ANY DISCREPANCY SHALL BE BROUGHT TO THE NOTICE OF LAUTERBACH & ASSOCIATES PRIOR TO COMMENCEMENT OF ANY WORK.

File Path

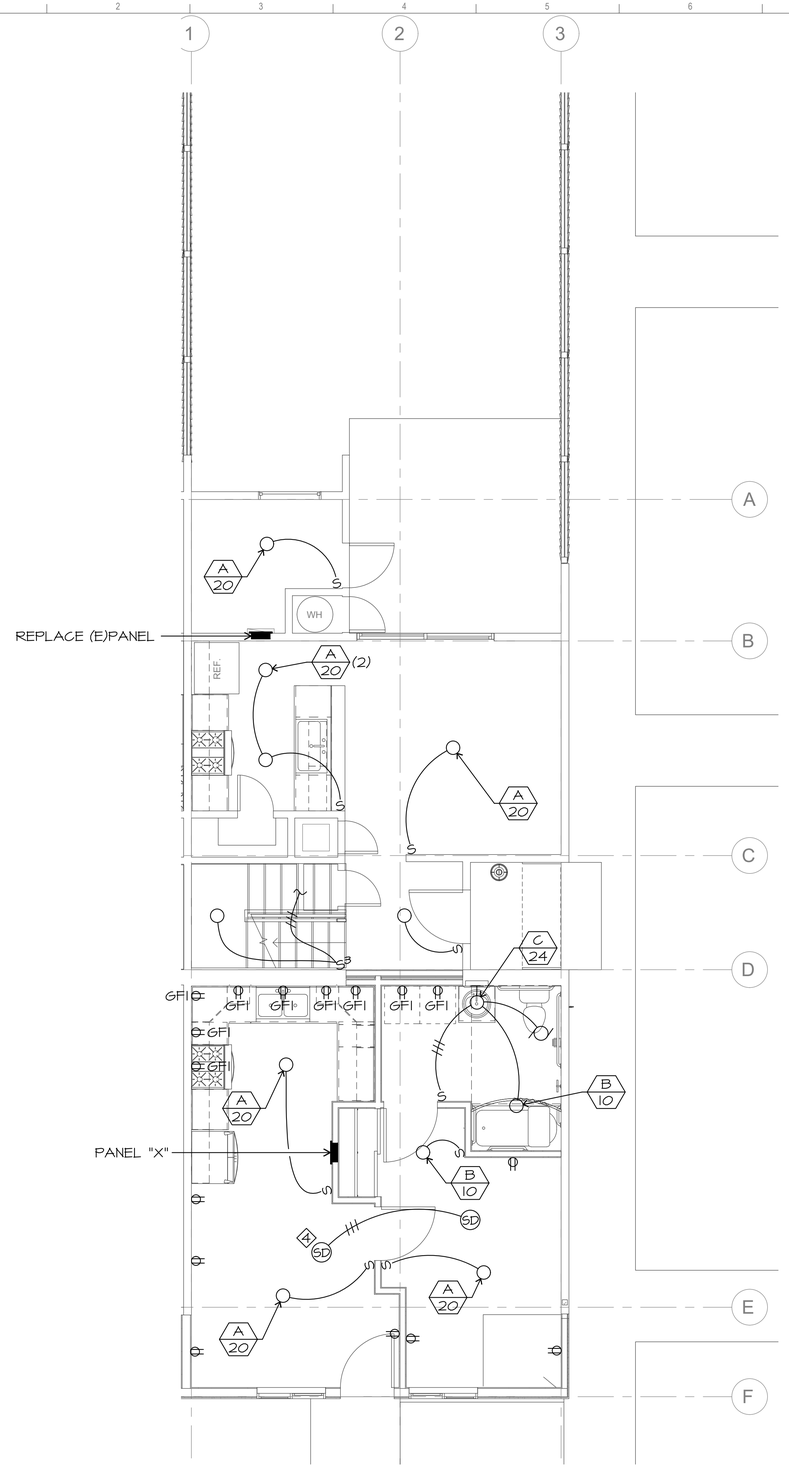

1 FIRST FLOOR DEMOLITION PLAN

SCALE: 1/4" = 1'-0"

ELECTRICAL NOTES

1. ALL OUTLETS IN DWELLING UNITS SHALL BE PROTECTED BY A LISTED ARC FAULT CIRCUIT INTERRUPTER, COMBINATION TYPE PER CEC 210.12
2. TAMPER RESISTANCE RECEPTACLE SHALL BE INSTALLED IN DWELLING UNITS PER CEC 406.11
3. SMOKE DETECTORS SHALL BE 120V, INTERCONNECTED, PHOTOELECTRIC/ION UNITS WITH BATTERY BACK UP

4. HALLWAY DETECTORS SHALL BE COMBINATION SMOKE AND CARBON MONOXIDE DETECTOR. PART #KIDDE KN-COSM-BA

5. VERIFY LOCATION OF FLUSH FLOOR RECEPTACLE PRIOR TO ROUGH IN

6. VACANCY SENSOR SWITCH SENSOR SWITCH #WSD-PDT-WH

7. LIGHTS MASTER SWITCH

8. 2 POLE VACANCY SENSOR SWITCH SENSOR SWITCH #WSD-2P-PDT-WH FAN

9. RESIDENCE SHALL BE PROTECTED BY APPROVED FIRE WARNING SYSTEM PER NFPA 72

10. EXHAUST FAN WITH MOTION & HUMIDITY CONTROL

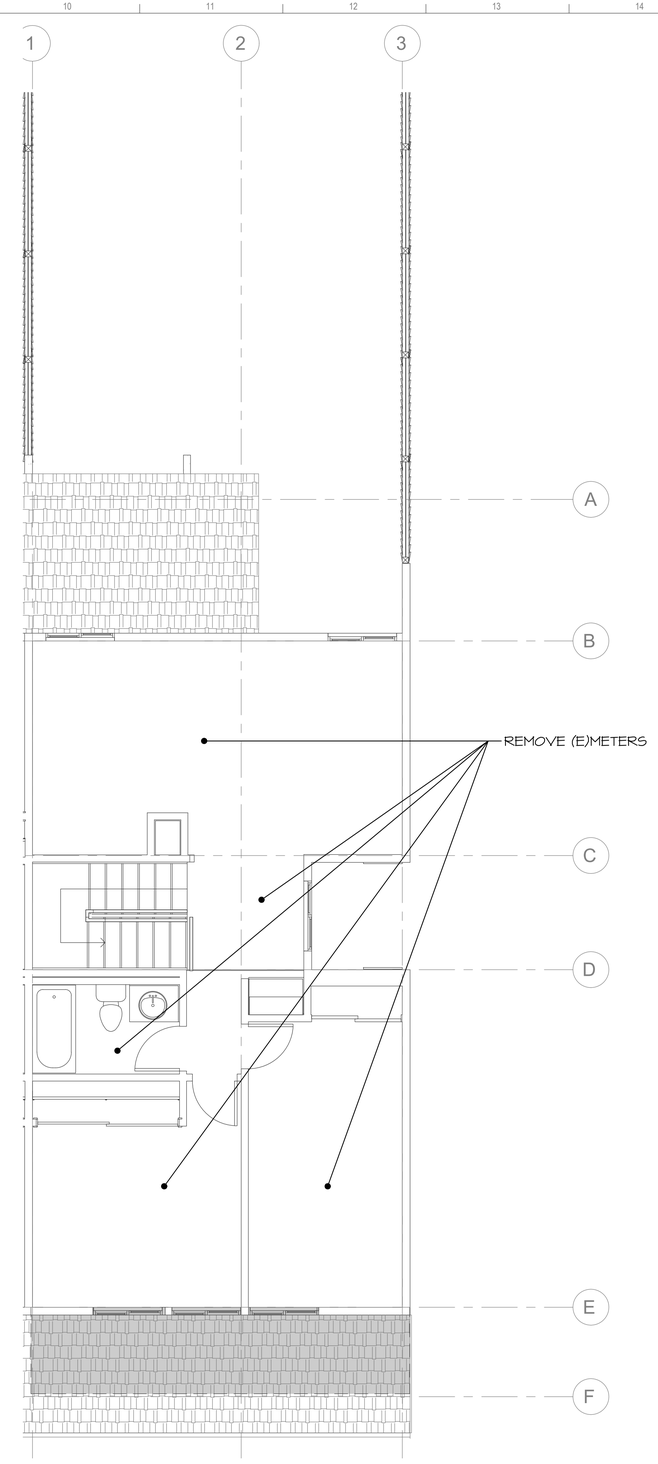

2 SECOND FLOOR DEMOLITION PLAN

SCALE: 1/4" = 1'-0"

JMPE
ELECTRICAL ENGINEERING
LIGHTING DESIGN
CA REGISTRATION NO E13083
19531
627 OLIVE STREET
SANTA BARBARA CA 93101
(805) 569-9216
FAX (805) 569-2405
email : maloney@jmpe.net
www.jmpe.net

LICENSED PROFESSIONAL ENGINEER
MICHAEL J. MALONEY
E013083
EXP. 06/30/2021
ELECTRICAL
STATE OF CALIFORNIA

NO	DESCRIPTION	DATE
1	SUBMIT	02-26-2020

ISSUE

JOB NO. 20-190209

DRAWN BY: -
CHECKED BY: -
PROJECT MANAGER: -
PRINT DATE:

ELECTRICAL FLOOR PLANS

E-103

Project Architect
LAUTERBACH & ASSOCIATES
ARCHITECTS INC.
David C. Kesterson, Architect • Ilona Scott, Architect • Mark S. Pettit, Architect
300 MONTGOMERY AVENUE, OXNARD, CALIFORNIA 93036 | 805-988-0912 | FAX 805-981-4510 | www.la-arch.com

LICENSED ARCHITECT
ILONA SCOTT
No. C11881
Ren. 06/21
STATE OF CALIFORNIA

FASHION PARK APARTMENTS
234, 251 & 257 FASHION PARK
OXNARD, CA, 93036

CITY OF OXNARD HOUSING AUTHORITY
435 S. D STREET
OXNARD, CALIFORNIA 93030

THESE DRAWINGS AND SPECIFICATIONS ARE THE PROPERTY AND COPYRIGHT OF LAUTERBACH & ASSOCIATES. ALL RIGHTS RESERVED, AND SHALL NOT BE USED ON ANY OTHER WORK OR PROJECT EXCEPT BY WRITTEN AGREEMENT WITH LAUTERBACH & ASSOCIATES. WRITTEN DIMENSIONS SHALL TAKE PRECEDENCE OVER SCALED DIMENSIONS AND SHALL BE VERIFIED ON THE JOB SITE. ANY DISCREPANCY SHALL BE BROUGHT TO THE NOTICE OF LAUTERBACH & ASSOCIATES PRIOR TO COMMENCEMENT OF ANY WORK.

File Path

CAPITAL IMPROVEMENT CONTRACT

Contract No: **A-8533**
Name of Contractor: MDJ Management
Address: 531 Main Street, #611, El Segundo, CA 90245

Project description: Concord Drive Apartments ADA Conversion

This Capital Improvement Contract (**"Contract")** is made at Oxnard, California, as of this 19th day of September 2023 between the City of Oxnard Housing Authority, called herein the **"Authority"**, and the above-named contractor (**"Contractor"**) for the construction of the capital improvement project described herein. The parties hereto agree as follows:

I. Type of Contract

This contract is a firm-fixed price contract as defined by 2CFR Part 200 and the Department of Housing and Urban Development (HUD) Handbook 7460.8, Rev. 2.

2. Contract Price

Contractor shall perform the scope of work per the detailed scope of work per approved plans submitted for the ADA unit conversion at 2950 and 2956 Concord Drive. Authority shall pay Contractor, as described in **Exhibit A**, attached hereto and incorporated herein by this reference, in full payment for said work, the following sum: **$1,221,499.92**

The above sum includes all taxes and the costs of any required bonds.

3. Payment Schedule

Authority shall pay Contractor no later than 30 calendar days after Authority accepts Contractor's invoices and Authority shall make final payment no later than 60 calendar days after Authority has issued and approved a certificate of completion for the work contemplated herein, provided that the Authority may withhold from progress payments an amount equal to 5 percent of the progress payment and may withhold from final payment an amount sufficient to protect the Authority from disputes equivalent to 150 percent of the value of any disputed amount of work.

4. Scope of Work

Contractor shall furnish all tools, equipment, apparatus, facilities, labor and materials necessary to, and shall perform and complete in a good, safe and workmanlike manner, the work described in the approved plans.

5. Contract Documents

The complete Contract consists of all the following, which are specifically incorporated herein by reference:

a. Change Orders
b. Contract Amendments –
c. This Contract
d. Amendments to HUD Form 5370
e. HUD Form 5370 General Conditions for Construction Contracts – Public Housing Programs
f. Specifications
g. Plans
h. Permits
i. Contractor's bid proposal and list of subcontractors (if applicable).
j. Performance and payment bonds as required by the specifications and applicable law. Unless otherwise specified, each such bond shall be 100 percent of the Contract price.
k. Insurance as required by the specifications and applicable law.
l. All applicable wage determinations, safety and health regulations, non-discrimination provisions, labor standards, and requirements if the Contract is federally assisted. This includes but is not limited to such items enumerated in the specifications and addenda thereto.

6. Indemnity

Contractor agrees to indemnify, hold harmless and defend Authority, its Commission, and each member thereof, and every officer, employee, representative or agent of Authority, from any and all liability, claims, demands, actions, damages (whether in contract or tort, including personal injury, death at any time, or property damage), costs and financial loss, including all costs and expenses and fees of litigation or arbitration, that arise directly or indirectly form any acts or omissions related to this Agreement performed by Contractor or its agents, employees, Subcontractors, Contractors, and other persons acting on Contractor's behalf. This agreement to indemnify, hold harmless and defend shall apply whether such acts or omissions are the product of active negligence, passive negligence, willfulness or acts for which Contractor or its agents, employees, subcontractors, consultants and other persons acting on Contractor's behalf would be held strictly liable.

7. Time for Performance

The time limit for the completion of the work is **540 working days** after receipt of the Notice to Proceed.

Contractor shall not perform any work until the Authority issues a Notice to Proceed. Work will be completed within the time limit specified above and in the Notice to Proceed.

8. Acknowledgement

Contractor by signing hereunder acknowledges that he has reviewed all the foregoing documents and agrees with the requirements, conditions and covenants contained therein.

The parties agree that this Agreement may be transmitted and signed by electronic or digital means by either/any or both/all Parties and that such signatures shall have the same force and effect as original signatures, in accordance with California Government Code Section 16.5 and California Civil Code Section 1633.7.

CITY OF OXNARD
HOUSING AUTHORITY

_____
John C. Zaragoza
Chairman

MDJ MANAGEMENT

_____
Matthew McMillon
President

APPROVED AS TO FORM:

_____
Stephen M. Fischer,
Housing General Counsel

APPROVED AS TO INSURANCE:

_____
Rhonda Hodge
Housing Finance Officer

APPROVED AS TO COMPLIANCE:

_____
Rhonda Hodge
Contract Administrator

GENERAL CONDITIONS

Work Hours:

From 8:00 AM to 5:00 PM max. Including 1-hour lunch.
No work is allowed Saturdays, Sundays and during any official holidays.

Safety and Security:
The contractors are required to secure the work area during the work hours, lunch hours, weekends, and holidays. The contractors shall secure and render safe the entire construction area at the end of each working day. Work areas must be well barricaded and flagged, and all precautions should be taken to avoid injury or damage to any person or property and shall protect and indemnify the Housing against any claim or liability arising from or based on the lack of proper safeguards or negligence whether by it or its agents, employees or Subcontractors.

Compliance with all Laws:
The contractors shall comply with all applicable federal, State and local laws, ordinances, codes and regulations in force at the time the contractors perform pursuant to the contract documents.

Project Schedule:
The contractor is expected to complete the job in not to exceed five hundred forty **(540) working days**.

Construction Debris:
Due to the nature of the job, the contractor is responsible for hauling away debris.

Storage Bin
The contractor shall provide bins and/or containers for temporary storage.

Warranty:
The contractor shall warranty the work for a period of **One (1) year** against workmanship.

Final Walkthrough, and Sign off:
The contractor is required to call for a final walk through with the project manager and/ or the Housing Authority staff after completion of the project. Upon approval, the contractor may bill the Housing Authority for said work. All the payments will be pending obtaining a final sign off from the City inspector and turning in those permits.

EXHIBIT A

GORDIAN®

Work Order Signature Document

EZIQC Contract No.: CA-R7-GB06-123021-MDJ

[X] **New Work Order** [ ] **Modify an Existing Work Order**

Work Order Number.:	116759.00	Work Order Date:	06/06/2023
Work Order Title:	Concord Unit 2950 Conversion		
Owner Name:	Oxnard Housing Authority	Contractor Name:	MDJ Management
Contact:	Fredi Contreras	Contact:	Matt McMillon
Phone:	805-890-8319	Phone:	310-490-1521

Work to be Performed

Work to be performed as per the Final Detailed Scope of Work Attached and as per the terms and conditions of Sourcewell EZIQC Contract No CA-R7-GB06-123021-MDJ.

Brief Work Order Description:

Time of Performance Estimated Start Date:

Estimated Completion Date:

Liquidated Damages Will apply: [ ] Will not apply: [X]

Work Order Firm Fixed Price: $610,749.96

Owner Purchase Order Number:

Approvals

Oxnard Housing Authority Date

MDJ Management Date

Detailed Scope of Work

To: Matt McMillon
MDJ Management
531 Main St #611
El Segundo, CA 90245
310-490-1521

From: Fredi Contreras
Oxnard Housing Authority
300 N. Marquita Street
Oxnard, CA 93030
805-890-8319

Date Printed: June 06, 2023

Work Order Number: 116759.00

Work Order Title: Concord Unit 2950 Conversion

Brief Scope:

☐ **Preliminary** ☐ **Revised** [X] **Final**

The following items detail the scope of work as discussed at the site. All requirements necessary to accomplish the items set forth below shall be considered part of this scope of work.

See attached.

Subject to the terms and conditions of ezIQC Contract **CA-R7-GB06-123021-MDJ**.

MDJ Management _____ Date _____

Oxnard Housing Authority _____ Date _____

MDJ Management, LLC
License # 1044711
DIR # 1000061313
531 Main St. #611 El Segundo CA 90245
310-490-1521

Job Name: 2950 Concord ADA Conversion
Location: 2950 Concord Dr. Oxnard, CA 93036
Customer: Oxnard Housing Authority

Submission Date: 5/31/23

Detailed Scope of Work

Demolition

- Demolition of existing apartment per plans
- Per Asbestos Survey report provided by client all walls, ceilings and floors to be considered ACM
    - Demolition of unit to be performed by certified hazardous material demolition company

Installation/Buildout

- Saw cutting of slab and demolition of concrete for new plumbing
- Excavation for new plumbing and new concrete footings for addition
- All framing throughout including new walls and soffits
- New rough and finish plumbing throughout
- New electrical rough including new panel per plan
- Concrete work:
    - Pour new footings for addition
    - Pour back all open trenches inside the unit
    - Pour slab for addition
    - Our sidewalk as required
- New windows and doors
- New Insulation
- HVAC ductwork, registers, and wall heaters.
    - Includes new forced air unit
- Drywall throughout
- Lath, stucco, and color coat to match existing
- Roofing, fascia, and gutters for new addition
- Interior paint
- New Flooring and base
- New kitchens, countertops, fixtures, sinks and appliances.

- New bathroom fixtures per plan
- Paint exterior of building
- Site work:
    - New sidewalks
    - Handicap ramp with truncated domes
    - Handicap striping
    - New signage at Handicap stall

Installation/Buildout added by Client NOT included on plans

- Remove and replace all outlets and switches throughout, even on all existing walls
- Remove and replace exterior lighting with LED lighting
    - Match existing 3 fixtures
- Install MDF baseboards
    - Instead of called out cove base
- Remove and replace all interior doors. Complete list of doors from plans as well as clients request:
    - Demo of 3 utility closet, 2 sliding closet, 5 bedroom, and 2 bathroom doors
    - Installation of 2 utility closet, 3 sliding closet, 3 bedroom, 2 bathroom doors, and 1 front door
- Clean up existing back yard, the weeds are 5 feet high
    - Includes weed weed whacking and removal of all dead weeds
- Remove and replace one section of vinyl fence because it is not wide enough for ADA width along concrete path to front door
    - 45 feet x 6 feet high
    - (1) One 4' Gate
    - Includes widening the concrete by one foot

Notes:

- All work to be performed per plans provided to MDJ
- Any additional add on items will be at the request of Customer. Any adjustment shall be an additional cost.
- Price includes all labor (**Normal Working Hours - Davis Bacon Wages**), materials, equipment to complete this scope of work.
- Construction Exclusions:
    - New Washer and Dryer not included in contract.

CLARIFICATIONS AND EXCLUSIONS:

- Warranty
    - One year warranty against workmanship
    - Manufacturer's warranty varies
- We exclude plans, permits, permit fees, related fees, testing, inspection, survey, and engineering unless specified above
- We exclude utilities and hazardous or contaminated material.
- Construction water, power, and sanitary facilities available on site for MDJ's use at no cost.
- We exclude premium time.
- We exclude anything not specifically mentioned above.
- MDJ reserves the right to review, change, and/or delete any provisions of any prime contract or subcontract, which results from this quotation.

- All terms to be net 30 days in full upon receipt of invoice. Interest will be charged at the rate of 2% monthly on the unpaid balance.

BID PRICE: See Price Proposal

All work to be completed in a substantial and workmanlike manner according to standard practices for the sum of **See Price Proposal.** Any additional add on items will be at the request of Customer. Any adjustment shall be an additional cost.

Bid price is good for thirty (30) days only.

Any controversy or claim based on, arising out of, or relating to this agreement, or breach thereof, including any claim based on the work performed pursuant to this agreement, shall be submitted to the American Arbitration Association for binding arbitration in accordance with its rules. If any arbitration, legal action is brought to enforce this agreement, or arising out of or relating to the agreement, the prevailing party shall be entitled to recover from the non-prevailing party reasonable attorney fees and costs incurred, in addition to any and all other relief to which that party may be entitled.

Submitted by:

Matthew McMillon
President MDJ
310.490.1521
matt@buildwithmdj.com

Contractor's Price Proposal - Summary

Date: June 06, 2023

Re:

IQC Master Contract #:	CA-R7-GB06-123021-MDJ
Work Order #:	116759.00
Owner PO #:	
Title:	Concord Unit 2950 Conversion
Contractor:	MDJ Management
Proposal Value:	$610,749.96

Section - 01	**$27,922.15**
Section - 02	**$124,779.67**
Section - 03	**$44,628.54**
Section - 06	**$30,807.26**
Section - 07	**$39,946.76**
Section - 08	**$16,937.65**
Section - 09	**$136,489.60**
Section - 10	**$1,650.96**
Section - 11	**$6,131.21**
Section - 12	**$7,227.87**
Section - 22	**$61,651.38**
Section - 23	**$30,704.85**
Section - 26	**$57,035.70**
Section - 31	**$17,571.02**
Section - 32	**$7,265.34**
Proposal Total	**$610,749.96**

Thisl total represents the correct total for the proposal. Any discrepancy between line totals, sub-totals and the proposal total is due to rounding.

The Percentage of NPP on this Proposal: %

Contractor's Price Proposal - Detail

Date: June 06, 2023

Re:

IQC Master Contract #:	CA-R7-GB06-123021-MDJ
Work Order #:	116759.00
Owner PO #:	
Title:	Concord Unit 2950 Conversion
Contractor:	MDJ Management
Proposal Value:	$610,749.96

	Sect.	Item	Mod.	UOM	Description	Line Total
Labor	Equip.	Material	(Excludes)			

Section - 01

1	01 22 16	00 0002		EA	Reimbursable FeesReimbursable Fees will be paid to the contractor for eligible costs as directed by Owner. Insert the appropriate quantity to adjust the base cost to the actual Reimbursable Fee. If there are multiple Reimbursable Fees, list each one separately and add a comment in the "note" block to identify the Reimbursable Fee (e.g. sidewalk closure, road cut, various permits, extended warranty, expedited shipping costs, etc.). A copy of each receipt shall be submitted with the Price Proposal.	$13,147.20

	Quantity		Unit Price		Factor		Total
Installation	11,952.00	x	1.00	x	1.1000	=	13,147.20

Bond = $597,602 x 2%

2	01 74 19	00 0016		EA	40 CY Dumpster (5 Ton) "Construction Debris"Includes delivery of dumpster, rental cost, pick-up cost, hauling, and disposal fee. Non-hazardous material.	$11,002.63

	Quantity		Unit Price		Factor		Total
Installation	12.00	x	809.97	x	1.1320	=	11,002.63

10 dumpsters for abatement debris: cabinets, drywall from entire house, shower, toilet, stucco, insulation, ...
2 dumpsters for construction debris: drywall cuts, lumber cuts, basic trash

3	01 74 19	00 0019		EA	15 CY Low-Boy Dumpster Mixed RecyclableFor mixed dirt, rock, concrete brick or asphalt with no trash or organics. Includes service to deliver and pick-up dumpster, hauling, rental and disposal fee.	$3,772.32

	Quantity		Unit Price		Factor		Total
Installation	4.00	x	833.11	x	1.1320	=	3,772.32

for removal of excavated soil for footings, slab, trenching

Subtotal for Section - 01 **$27,922.15**

Section - 02

4	02 41 19	13 0063		LF	Rod Reinforced Concrete Slab Up To 4" Depth, Saw Cut	$2,499.46

	Quantity		Unit Price		Factor		Total
Installation	400.00	x	5.52	x	1.1320	=	2,499.46

sawcut existing slab to trench for new electrical and plumbing runs as needed per plans

5	02 82 33	00 0067		SF	>2,500 To 10,000 SF, Single Layer Gypsum Wall Board, Asbestos Abatement And Disposal	$62,951.52

	Quantity		Unit Price		Factor		Total
Installation	6,684.00	x	8.32	x	1.1320	=	62,951.52

demolition throughout. All drywall mud is hot. ceilings and walls

6	02 82 33	00 0074		SF	>500 To 2,500 SF, Gypsum Wall Board (Or Backer Board) With Ceramic Tile And Mastic, Asbestos Abatement And Disposal	$12,439.55

	Quantity		Unit Price		Factor		Total
Installation	550.00	x	19.98	x	1.1320	=	12,439.55

demolition of bathrooms tile and backer board walls and floor as well as kitchen tile

7	02 82 33	00 0087		SF	>500 To 2,500 SF, Spray On Acoustical Ceiling, Asbestos Abatement And Disposal	$16,659.92

	Quantity		Unit Price		Factor		Total
Installation	1,564.00	x	9.41	x	1.1320	=	16,659.92

demolition

Work Order Number: 116759.00
Work Order Title: Concord Unit 2950 Conversion

Section - 02

8	02 82 33 00 0101		SF	>500 To 2,500 SF, Single Layer Or First Of Multiple Layers, Floor Tile, Asbestos Abatement And Disposal									$10,959.07
			Installation	Quantity 1,564.00	x	Unit Price 6.19	x	Factor 1.1320	=	Total 10,959.07			
			demolition of 2 layers of floor tile										
9	02 82 33 00 0101	0001		For Each Additional Layer, Add									$2,744.19
			Installation	Quantity 1,564.00	x	Unit Price 1.55	x	Factor 1.1320	=	Total 2,744.19			
10	02 82 33 00 0245		CF	>100 To 250 CF, Asbestos Contaminated Debris, Asbestos Abatement And Disposal									$13,881.15
			Installation	Quantity 250.00	x	Unit Price 49.05	x	Factor 1.1320	=	Total 13,881.15			
			demolition of all cabinets and vanities per plans. They are attached to the walls so removal would disturb drywall material that is hot. This is for kitchen and bathroom										
11	02 82 33 00 0333		SF	High Efficiency Particulate Air (HEPA) Vacuum And Cleaning Of Contaminated Area									$1,186.20
			Installation	Quantity 1,564.00	x	Unit Price 0.67	x	Factor 1.1320	=	Total 1,186.20			
			demolition part of abatement procedures										
12	02 89 00 00 0021		EA	3 Stage Portable Personnel Decontamination Wash FacilityIncludes connection to negative air system.									$907.07
			Installation	Quantity 1.00	x	Unit Price 801.30	x	Factor 1.1320	=	Total 907.07			
			demolition part of abatement procedures										
13	02 89 00 00 0023		EA	Portable Waste Decontamination UnitIncludes connection to negative air system.									$551.54
			Installation	Quantity 1.00	x	Unit Price 487.23	x	Factor 1.1320	=	Total 551.54			
			demolition										

Subtotal for Section - 02 **$124,779.67**

Section - 03

14	03 11 13 00 0003		SF	Continuous Footings Foundation Wood Formwork									$1,882.74
			Installation	Quantity 240.00	x	Unit Price 6.93	x	Factor 1.1320	=	Total 1,882.74			
			footing for new addition										
15	03 11 13 00 0003	0001		For <1,000, Add									$350.47
			Installation	Quantity 240.00	x	Unit Price 1.29	x	Factor 1.1320	=	Total 350.47			
16	03 11 13 00 0009		LF	Up To 6" High Slab Edge and Block-Out Wood Formwork									$699.89
			Installation	Quantity 116.00	x	Unit Price 5.33	x	Factor 1.1320	=	Total 699.89			
			for new addition										
17	03 11 13 00 0009	0004		For Up To 250, Add									$69.28
			Installation	Quantity 60.00	x	Unit Price 1.02	x	Factor 1.1320	=	Total 69.28			
18	03 21 11 00 0251		EA	Dowels Or Hairpin, 1/2" x 30" Length, Drilled And Epoxy In Concrete, 6" Embedment									$5,682.36
			Installation	Quantity 225.00	x	Unit Price 22.31	x	Factor 1.1320	=	Total 5,682.36			
			200 LF of trenching. Epoxy and Dowel every 2'. One on each side. For reinforcement and tying into existing slab adjacent. 25 dowels to attach from porch sidewalk to existing .										

Contractor's Price Proposal - Detail Continues..

Work Order Number: 116759.00
Work Order Title: Concord Unit 2950 Conversion

Section - 03

19	03 21 13 00 0093		LF	#6, Grade 50, Slab On Grade, Galvanized Steel Reinforcement Bar								$2,010.43
					Quantity		Unit Price		Factor		Total	
				Installation	800.00	x	2.22	x	1.1320	=	2,010.43	
				200 LF of trenching and 600 LF for slab, porch, and footings. Installation of rebar every 2'.								
20	03 30 53 00 0007		CF	Hand Mix And Place ConcreteFor use where conventional equipment access is limited or when directed by the owner.								$6,592.77
					Quantity		Unit Price		Factor		Total	
				Installation	200.00	x	29.12	x	1.1320	=	6,592.77	
				patch back trenching in existing slab								
21	03 31 13 00 0003		SF	4" 3,000 PSI Slab On Grade Concrete Slabs Assembly								$1,768.18
					Quantity		Unit Price		Factor		Total	
				Installation	200.00	x	7.81	x	1.1320	=	1,768.18	
				for new addition								
22	03 31 13 00 0003	0156		For Up To 500, Add								$681.46
					Quantity		Unit Price		Factor		Total	
				Installation	200.00	x	3.01	x	1.1320	=	681.46	
23	03 31 13 00 0023		CY	Concrete Pump, Place 3,000 PSI Concrete Spread FootingsExcludes pumping equipment.								$14,833.73
					Quantity		Unit Price		Factor		Total	
				Installation	50.00	x	262.08	x	1.1320	=	14,833.73	
				24 CY footing for new addition. 26 CY for Front porch/sloped walk								
24	03 31 13 00 0023	0040		For >20 To 50, Add								$638.45
					Quantity		Unit Price		Factor		Total	
				Installation	50.00	x	11.28	x	1.1320	=	638.45	
25	03 54 16 00 0005		SF	1/2" Thick Self Leveling Cementitious Underlayment For FloorsIncluding Surface Preparation								$9,418.78
					Quantity		Unit Price		Factor		Total	
				Installation	1,564.00	x	5.32	x	1.1320	=	9,418.78	
				self leveling of floors for prior to installation of new vinyl plank flooring								

Subtotal for Section - 03 **$44,628.54**

Section - 06

26	06 11 16 00 0061		SF	2" x 4" Wood Wall Framing At 16" On Center								$2,351.16
					Quantity		Unit Price		Factor		Total	
				Installation	950.00	x	1.58	x	1.1320	=	1,699.13	
				Demolition	800.00	x	0.72	x	1.1320	=	652.03	
				for new walls, new addition, and soffits. Couple walls require double stacked 2x4 staggered A-602								
27	06 11 16 00 0062		SF	2" x 6" Wood Wall Framing At 16" On Center								$616.94
					Quantity		Unit Price		Factor		Total	
				Installation	250.00	x	2.18	x	1.1320	=	616.94	
				2x6 wall per plans								
28	06 11 16 00 0062	0004		For >200 To 500, Add								$101.88
					Quantity		Unit Price		Factor		Total	
				Installation	250.00	x	0.36	x	1.1320	=	101.88	
29	06 11 16 00 0063		SF	2" x 8" Wood Wall Framing At 16" On Center								$263.53
					Quantity		Unit Price		Factor		Total	
				Installation	80.00	x	2.91	x	1.1320	=	263.53	
				2x8 wall per plans								

Work Order Number: 116759.00
Work Order Title: Concord Unit 2950 Conversion

Section - 06

30	06 11 16 00 0063	0003		For Up To 200, Add									$86.94
			Installation		Quantity 80.00	x	Unit Price 0.96	x	Factor 1.1320	=	Total 86.94		
31	06 11 16 00 0179		LF	2" x 4" Pressure Treated Lumber, For Roofing Nailers									$871.64
			Installation		Quantity 250.00	x	Unit Price 3.08	x	Factor 1.1320	=	Total 871.64		
			for roof framing										
32	06 11 16 00 0183		LF	2" x 4" Pressure Treated Lumber, For Roofing Sleepers									$464.12
			Installation		Quantity 250.00	x	Unit Price 1.64	x	Factor 1.1320	=	Total 464.12		
			for roof framing										
33	06 16 33 00 0006		SF	3/4" Thick CDX Plywood Roof DeckingApplied to wood rafters.									$690.52
			Installation		Quantity 250.00	x	Unit Price 2.44	x	Factor 1.1320	=	Total 690.52		
			for new addition roof										
34	06 16 33 00 0006	0040		For Tongue And Groove, Add									$19.81
			Installation		Quantity 250.00	x	Unit Price 0.07	x	Factor 1.1320	=	Total 19.81		
35	06 16 33 00 0012		SF	1/2" Interior BC Plywood Wall SheathingApplied to wall studs.									$1,036.91
			Installation		Quantity 400.00	x	Unit Price 2.29	x	Factor 1.1320	=	Total 1,036.91		
			for new addition per plans										
36	06 16 33 00 0012	0005		For Shear Wall Construction, Add									$135.84
			Installation		Quantity 400.00	x	Unit Price 0.30	x	Factor 1.1320	=	Total 135.84		
37	06 16 33 00 0012	0006		For Exterior CC Grade Plywood, Add									$54.34
			Installation		Quantity 400.00	x	Unit Price 0.12	x	Factor 1.1320	=	Total 54.34		
38	06 16 33 00 0020		SF	3/4" CD Grade Plywood Floor DeckingApplied to floor or joists.									$5,169.71
			Installation		Quantity 1,564.00	x	Unit Price 2.36	x	Factor 1.1320	=	Total 4,178.26		
			Demolition		1,564.00	x	0.56	x	1.1320	=	991.45		
			for new floor decking per plans FSI/A-602. plans require glue										
39	06 16 33 00 0020	0038		For Exterior Glue, Add									$1,593.40
			Installation		Quantity 15,640.00	x	Unit Price 0.09	x	Factor 1.1320	=	Total 1,593.40		
40	06 41 13 00 0225		EA	15" Wide, 35" High x 23-3/4" Deep, Single Drawer and Single Door, Solid Wood Face Frame, Thermofoil Door and Drawer Front, Base Cabinet									$736.43
			Installation		Quantity 2.00	x	Unit Price 325.28	x	Factor 1.1320	=	Total 736.43		
			demolition of 1 kitchen and installation of 2 new kitchen cabinets per plans										
41	06 41 13 00 0225	0126		For Solid Wood Drawers, Dovetail Joints And Full Extension Drawer Guides, Add									$231.72
			Installation		Quantity 2.00	x	Unit Price 102.35	x	Factor 1.1320	=	Total 231.72		
42	06 41 13 00 0225	0130		For All Plywood Box Construction, Add									$241.55
			Installation		Quantity 2.00	x	Unit Price 106.69	x	Factor 1.1320	=	Total 241.55		

Work Order Number: 116759.00
Work Order Title: Concord Unit 2950 Conversion

Section - 06

43	06 41 13 00 0226		EA	18" Wide, 35" High x 23-3/4" Deep, Single Drawer and Single Door, Solid Wood Face Frame, Thermofoil Door and Drawer Front, Base Cabinet									$770.08
			Installation	Quantity 2.00	x	Unit Price 340.14	x	Factor 1.1320	=	Total 770.08			
				demolition of 1 kitchen and installation of 2 new kitchen cabinets per plans									
44	06 41 13 00 0226	0126		For Solid Wood Drawers, Dovetail Joints And Full Extension Drawer Guides, Add									$231.72
			Installation	Quantity 2.00	x	Unit Price 102.35	x	Factor 1.1320	=	Total 231.72			
45	06 41 13 00 0226	0130		For All Plywood Box Construction, Add									$241.55
			Installation	Quantity 2.00	x	Unit Price 106.69	x	Factor 1.1320	=	Total 241.55			
46	06 41 13 00 0228		EA	24" Wide, 35" High x 23-3/4" Deep, Single Drawer and Single Door, Solid Wood Face Frame, Thermofoil Door and Drawer Front, Base Cabinet									$460.91
			Installation	Quantity 1.00	x	Unit Price 407.16	x	Factor 1.1320	=	Total 460.91			
				demolition of 1 kitchen and installation of 2 new kitchen cabinets per plans									
47	06 41 13 00 0228	0126		For Solid Wood Drawers, Dovetail Joints And Full Extension Drawer Guides, Add									$115.86
			Installation	Quantity 1.00	x	Unit Price 102.35	x	Factor 1.1320	=	Total 115.86			
48	06 41 13 00 0228	0130		For All Plywood Box Construction, Add									$120.77
			Installation	Quantity 1.00	x	Unit Price 106.69	x	Factor 1.1320	=	Total 120.77			
49	06 41 13 00 0231		EA	33" Wide, 35" High x 23-3/4" Deep, Single Drawer and Double Door, Solid Wood Face Frame, Thermofoil Door and Drawer Front, Base Cabinet									$1,098.81
			Installation	Quantity 2.00	x	Unit Price 485.34	x	Factor 1.1320	=	Total 1,098.81			
				demolition of 1 kitchen and installation of 2 new kitchen cabinets per plans									
50	06 41 13 00 0231	0126		For Solid Wood Drawers, Dovetail Joints And Full Extension Drawer Guides, Add									$231.72
			Installation	Quantity 2.00	x	Unit Price 102.35	x	Factor 1.1320	=	Total 231.72			
51	06 41 13 00 0231	0130		For All Plywood Box Construction, Add									$241.55
			Installation	Quantity 2.00	x	Unit Price 106.69	x	Factor 1.1320	=	Total 241.55			
52	06 41 13 00 0232		EA	36" Wide, 35" High x 23-3/4" Deep, Single Drawer and Double Door, Solid Wood Face Frame, Thermofoil Door and Drawer Front, Base Cabinet									$1,133.00
			Installation	Quantity 2.00	x	Unit Price 500.44	x	Factor 1.1320	=	Total 1,133.00			
				demolition of 1 kitchen and installation of 2 new kitchen cabinets per plans									
53	06 41 13 00 0232	0126		For Solid Wood Drawers, Dovetail Joints And Full Extension Drawer Guides, Add									$231.72
			Installation	Quantity 2.00	x	Unit Price 102.35	x	Factor 1.1320	=	Total 231.72			
54	06 41 13 00 0232	0130		For All Plywood Box Construction, Add									$241.55
			Installation	Quantity 2.00	x	Unit Price 106.69	x	Factor 1.1320	=	Total 241.55			
55	06 41 13 00 0248		EA	15" Wide, 35" High x 23-3/4" Deep, Four Drawer Base, Solid Wood Face Frame and Thermofoil Drawer Fronts, Base Cabinet									$881.74
			Installation	Quantity 2.00	x	Unit Price 389.46	x	Factor 1.1320	=	Total 881.74			
				demolition of 1 kitchen and installation of 2 new kitchen cabinets per plans									

Contractor's Price Proposal - Detail Continues..

Work Order Number: 116759.00
Work Order Title: Concord Unit 2950 Conversion

Section - 06

56	06 41 13 00 0248	0129		For Solid Wood Drawers, Dovetail Joints And Full Extension Drawer Guides, Add									$926.86
			Installation	Quantity		Unit Price		Factor		Total			
				2.00	x	409.39	x	1.1320	=	926.86			
57	06 41 13 00 0248	0130		For All Plywood Box Construction, Add									$241.55
			Installation	Quantity		Unit Price		Factor		Total			
				2.00	x	106.69	x	1.1320	=	241.55			
58	06 41 13 00 0258		EA	33" Wide, 12" High x 12" Deep, Double Door, Solid Wood Face Frame and Thermofoil Doors, Wall Cabinet									$331.44
			Installation	Quantity		Unit Price		Factor		Total			
				1.00	x	292.79	x	1.1320	=	331.44			
				demolition of 1 kitchen and installation of 2 new kitchen cabinets per plans									
59	06 41 13 00 0258	0131		For All Plywood Box Construction, Add									$64.81
			Installation	Quantity		Unit Price		Factor		Total			
				1.00	x	57.25	x	1.1320	=	64.81			
60	06 41 13 00 0259		EA	36" Wide, 12" High x 12" Deep, Double Door, Solid Wood Face Frame and Thermofoil Doors, Wall Cabinet									$365.34
			Installation	Quantity		Unit Price		Factor		Total			
				1.00	x	322.74	x	1.1320	=	365.34			
				demolition of 1 kitchen and installation of 2 new kitchen cabinets per plans									
61	06 41 13 00 0259	0131		For All Plywood Box Construction, Add									$64.81
			Installation	Quantity		Unit Price		Factor		Total			
				1.00	x	57.25	x	1.1320	=	64.81			
62	06 41 13 00 0278		EA	30" Wide, 18" High x 12" Deep, Double Doors, Solid Wood Face Frame and Thermofoil Doors, Wall Cabinet									$722.69
			Installation	Quantity		Unit Price		Factor		Total			
				2.00	x	319.21	x	1.1320	=	722.69			
				demolition of 1 kitchen and installation of 2 new kitchen cabinets per plans									
63	06 41 13 00 0278	0131		For All Plywood Box Construction, Add									$129.61
			Installation	Quantity		Unit Price		Factor		Total			
				2.00	x	57.25	x	1.1320	=	129.61			
64	06 41 13 00 0282		EA	12" Wide, 30" High x 12" Deep, Single Door, Solid Wood Face Frame and Thermofoil Door, Wall Cabinet									$597.90
			Installation	Quantity		Unit Price		Factor		Total			
				2.00	x	264.09	x	1.1320	=	597.90			
				demolition of 1 kitchen and installation of 2 new kitchen cabinets per plans									
65	06 41 13 00 0282	0131		For All Plywood Box Construction, Add									$129.61
			Installation	Quantity		Unit Price		Factor		Total			
				2.00	x	57.25	x	1.1320	=	129.61			
66	06 41 13 00 0283		EA	15" Wide, 30" High x 12" Deep, Single Door, Solid Wood Face Frame and Thermofoil Door, Wall Cabinet									$325.62
			Installation	Quantity		Unit Price		Factor		Total			
				1.00	x	287.65	x	1.1320	=	325.62			
				demolition of 1 kitchen and installation of 2 new kitchen cabinets per plans									
67	06 41 13 00 0283	0131		For All Plywood Box Construction, Add									$64.81
			Installation	Quantity		Unit Price		Factor		Total			
				1.00	x	57.25	x	1.1320	=	64.81			
68	06 41 13 00 0283		EA	15" Wide, 30" High x 12" Deep, Single Door, Solid Wood Face Frame and Thermofoil Door, Wall Cabinet									$325.62
			Installation	Quantity		Unit Price		Factor		Total			
				1.00	x	287.65	x	1.1320	=	325.62			
				demolition of 1 kitchen and installation of 2 new kitchen cabinets per plans									

Work Order Number: 116759.00
Work Order Title: Concord Unit 2950 Conversion

Section - 06

69	06 41 13 00 0283	0131		For All Plywood Box Construction, Add									$64.81
			Installation	Quantity 1.00	x	Unit Price 57.25	x	Factor 1.1320	=	Total 64.81			
70	06 41 13 00 0284		EA	18" Wide, 30" High x 12" Deep, Single Door, Solid Wood Face Frame and Thermofoil Door, Wall Cabinet									$694.28
			Installation	Quantity 2.00	x	Unit Price 306.66	x	Factor 1.1320	=	Total 694.28			
				demolition of 1 kitchen and installation of 2 new kitchen cabinets per plans									
71	06 41 13 00 0284	0131		For All Plywood Box Construction, Add									$129.61
			Installation	Quantity 2.00	x	Unit Price 57.25	x	Factor 1.1320	=	Total 129.61			
72	06 41 13 00 0289		EA	33" Wide, 30" High x 12" Deep, Double Doors, Solid Wood Face Frame and Thermofoil Doors, Wall Cabinet									$974.72
			Installation	Quantity 2.00	x	Unit Price 430.53	x	Factor 1.1320	=	Total 974.72			
				demolition of 1 kitchen and installation of 2 new kitchen cabinets per plans									
73	06 41 13 00 0289	0131		For All Plywood Box Construction, Add									$129.61
			Installation	Quantity 2.00	x	Unit Price 57.25	x	Factor 1.1320	=	Total 129.61			
74	06 41 13 00 0329		EA	36" Wide, 84" High x 24" Deep, Four Doors, Solid Wood Face Frame and Thermofoil Doors, Pantry Cabinet									$1,462.41
			Installation	Quantity 1.00	x	Unit Price 1,291.88	x	Factor 1.1320	=	Total 1,462.41			
				demolition of 1 kitchen and installation of 2 new kitchen cabinets per plans									
75	06 41 13 00 0329	0132		For All Plywood Box Construction, Add									$239.58
			Installation	Quantity 1.00	x	Unit Price 211.64	x	Factor 1.1320	=	Total 239.58			
76	06 41 93 00 0007		EA	7" To 8-1/2", Flat Cabinet Pull Handle									$2,154.15
			Installation	Quantity 54.00	x	Unit Price 35.24	x	Factor 1.1320	=	Total 2,154.15			
				demolition of 1 kitchen and installation of 2 new kitchen cabinets per plans									

Subtotal for Section - 06 **$30,807.26**

Section - 07

77	07 21 16 00 0006		SF	5-1/2" Thick, Kraft Faced, R-21 Fiberglass Flexible Insulation									$19,505.18
			Installation	Quantity 8,284.00	x	Unit Price 1.72	x	Factor 1.1320	=	Total 16,129.28			
			Demolition	8,284.00	x	0.36	x	1.1320	=	3,375.90			
				removal of existing insulation and installation of new 6684 sqft of walls 1564 sqft of ceilings									
78	07 26 13 00 0010		CSF	Building Wrap (Tyvek)									$5,304.13
			Installation	Quantity 87.50	x	Unit Price 53.55	x	Factor 1.1320	=	Total 5,304.13			
				for new addition									
79	07 31 13 13 0004		SQ	230 LB/SQ, 5" Exposure, Three Tab Fiberglass Reinforced, Asphalt Composition Shingle (CertainTeed XT 30)									$7,409.79
			Installation	Quantity 25.00	x	Unit Price 261.83	x	Factor 1.1320	=	Total 7,409.79			
				new shingle roof for addition									

Work Order Number: 116759.00
Work Order Title: Concord Unit 2950 Conversion

Section - 07

80	07 34 00 00 0003		SQ	30 LB, Asphalt Saturated Organic Felt Roofing Underlayment, Mechanically Fastened								$1,416.70
			Installation	Quantity 25.00	x	Unit Price 50.06	x	Factor 1.1320	=	Total 1,416.70		
			new shingle roof for addition									
81	07 41 13 00 0026		LF	Eave Flashing For Aluminum Exposed Fastener Metal Roofing								$784.25
			Installation	Quantity 40.00	x	Unit Price 17.32	x	Factor 1.1320	=	Total 784.25		
			for new addition									
82	07 41 13 00 0026	0130		For Fluoropolymer (Kynar®) Coating, Add								$42.11
			Installation	Quantity 40.00	x	Unit Price 0.93	x	Factor 1.1320	=	Total 42.11		
83	07 62 13 00 0033		SF	22 Gauge, 0.034" Thick, Galvanized Steel Flashing								$4,149.91
			Installation	Quantity 300.00	x	Unit Price 12.22	x	Factor 1.1320	=	Total 4,149.91		
			flashing per plans for addition and 100 sqft for new windows									
84	07 62 13 00 0033	0080		For Wrap Around Window Panning, Add								$699.58
			Installation	Quantity 100.00	x	Unit Price 6.18	x	Factor 1.1320	=	Total 699.58		
85	07 71 23 00 0016		LF	6", 0.032" Thick, Box Style Aluminum Gutter								$429.88
			Installation	Quantity 25.00	x	Unit Price 15.19	x	Factor 1.1320	=	Total 429.88		
			rain gutter per plans									
86	07 71 23 00 0016	0322		For Up To 100', Add								$70.18
			Installation	Quantity 25.00	x	Unit Price 2.48	x	Factor 1.1320	=	Total 70.18		
87	07 71 23 00 0029		EA	6", Box Style Aluminum Gutter End Cap								$18.34
			Installation	Quantity 2.00	x	Unit Price 8.10	x	Factor 1.1320	=	Total 18.34		
			rain gutter per plans									
88	07 71 23 00 0055		LF	4" x 5", 0.019" Thick, Rectangular Aluminum Downspout								$102.67
			Installation	Quantity 10.00	x	Unit Price 9.07	x	Factor 1.1320	=	Total 102.67		
			rain gutter per plans									
89	07 71 23 00 0055	0325		For Up To 100', Add								$14.04
			Installation	Quantity 10.00	x	Unit Price 1.24	x	Factor 1.1320	=	Total 14.04		

Subtotal for Section - 07 **$39,946.76**

Section - 08

90	08 05 13 00 0041		EA	Factory Prepare Wood Door (Rated Or Non-Rated) For Mortise Lockset Hardware								$470.41
			Installation	Quantity 6.00	x	Unit Price 69.26	x	Factor 1.1320	=	Total 470.41		
			for all new doors. 1 front door, 2 bath, and 3 bedroom									

Work Order Number: 116759.00
Work Order Title: Concord Unit 2950 Conversion

Section - 08

91	08 14 16 00 0134	EA	3'-0" x 6'-8" x 1-3/4" Thick, 5 Ply, Hollow Core (HC), Birch Faced Wood Door									$2,910.85
				Quantity		Unit Price		Factor		Total		
			Installation	7.00	x	288.16	x	1.1320	=	2,283.38		
			Demolition	10.00	x	55.43	x	1.1320	=	627.47		
			Demo of 3 utility closet, 5 bedroom, and 2 bathroom doors. Installation of 2 utility closet, 3 bedroom, 2 bathroom doors.									
92	08 14 73 00 0074	EA	5' Wide, Two 2'-6" x 6'-8" x 1-3/8" Thick, Flush, Hollow Core (HC), Birch Faced Wood Bi-Pass Doors									$1,525.71
				Quantity		Unit Price		Factor		Total		
			Installation	3.00	x	396.94	x	1.1320	=	1,348.01		
			Demolition	2.00	x	78.49	x	1.1320	=	177.70		
			removal of 2 existing closet sliding doors, installation of 3 new closet sliding doors									
93	08 53 13 00 0549	EA	>110" To 120" UI, Horizontal Sliding Premium Vinyl Window (Pella 350)									$4,060.21
				Quantity		Unit Price		Factor		Total		
			Installation	5.00	x	631.42	x	1.1320	=	3,573.84		
			Demolition	6.00	x	71.61	x	1.1320	=	486.38		
			removal of 6 existing windows. Installation of 5 new windows per plans									
94	08 71 11 00 0004	PR	3-1/2" x 3-1/2" Standard Duty, Full Mortise, Plain Bearing, Brass/Bronze, Satin Chrome Finish Hinge									$652.61
				Quantity		Unit Price		Factor		Total		
			Installation	7.00	x	73.13	x	1.1320	=	579.48		
			Demolition	10.00	x	6.46	x	1.1320	=	73.13		
			Demo of 3 utility closet, 5 bedroom, and 2 bathroom doors. Installation of 2 utility closet, 3 bedroom, 2 bathroom doors.									
95	08 71 11 00 0005	PR	4" x 4" Standard Duty, Full Mortise, Plain Bearing, Brass/Bronze, Satin Chrome Finish Hinge									$136.35
				Quantity		Unit Price		Factor		Total		
			Installation	1.50	x	80.30	x	1.1320	=	136.35		
			for new front door per plans									
96	08 71 11 00 0513	EA	3" Projection, Residential Spring Type, Bright Brass Finish, Steel Wall Stop (Ives 63)									$130.43
				Quantity		Unit Price		Factor		Total		
			Installation	7.00	x	9.86	x	1.1320	=	78.13		
			Demolition	10.00	x	4.62	x	1.1320	=	52.30		
			per plans									
97	08 71 11 00 0655	EA	190 Degree Angle Of View, Bright Brass Finish, Brass One-Way Wide Angle Door Viewer (Ives U698)									$47.59
				Quantity		Unit Price		Factor		Total		
			Installation	1.00	x	42.04	x	1.1320	=	47.59		
			for new front door per plans									
98	08 71 11 00 2288	EA	Passage/Closet F01 Mortise LatchsetBoth sides always unlocked.									$1,471.62
				Quantity		Unit Price		Factor		Total		
			Installation	2.00	x	615.36	x	1.1320	=	1,393.18		
			Demolition	3.00	x	23.10	x	1.1320	=	78.45		
			Demo of 3 utility closet. Installation of 2 utility closet doors									
99	08 71 11 00 2289	EA	Bath/Bedroom Privacy F02/F19 Mortise LocksetLocked with thumb knob inside.									$4,323.67
				Quantity		Unit Price		Factor		Total		
			Installation	5.00	x	731.56	x	1.1320	=	4,140.63		
			Demolition	7.00	x	23.10	x	1.1320	=	183.04		
			Demo of 5 bedroom, and 2 bathroom doors. Installation of 3 bedroom, 2 bathroom doors.									

Contractor's Price Proposal - Detail Continues..

Work Order Number: 116759.00
Work Order Title: Concord Unit 2950 Conversion

Section - 08

100	08 71 11 00 2293		EA	Entrance F08 Mortise LocksetLocked with key outside and thumb knob inside.								$960.13
					Quantity		Unit Price		Factor		Total	
				Installation	1.00	x	848.17	x	1.1320	=	960.13	
				for new front door per plans								
101	08 71 11 00 2293	0263		For Satin Brass Clear Coat US4 (BHMA 606) Finish, Add								$42.78
					Quantity		Unit Price		Factor		Total	
				Installation	1.00	x	37.79	x	1.1320	=	42.78	
102	08 72 33 00 0155		LF	3/8" x 3/16", Silicon Compression Bulb, Adhesive Backed Perimeter Gasketing Weather-Strip (Pemko PK33)								$63.89
					Quantity		Unit Price		Factor		Total	
				Installation	17.00	x	3.32	x	1.1320	=	63.89	
				for new front door per plans								
103	08 72 43 00 0011		LF	6" Width, 1/4" Height, Aluminum Saddle Threshold (Pemko 272A)								$125.07
					Quantity		Unit Price		Factor		Total	
				Installation	3.00	x	36.83	x	1.1320	=	125.07	
				for new front door per plans								
104	08 72 43 00 0011	0458		For Color Anodized Finish, Add								$16.33
					Quantity		Unit Price		Factor		Total	
				Installation	3.00	x	4.81	x	1.1320	=	16.33	

Subtotal for Section - 08 **$16,937.65**

Section - 09

105	09 05 71 00 0002		SF	5 Mil Tile And Stone Acoustical Underlayment (EasyMat)								$6,391.32
					Quantity		Unit Price		Factor		Total	
				Installation	1,564.00	x	3.61	x	1.1320	=	6,391.32	
				acousthmat underlayment per plans FSI/A-602								
106	09 05 71 00 0005		SF	2 MM Thick Resilient Plank Floor Acoustical Underlayment (Floormuffler)								$2,637.97
					Quantity		Unit Price		Factor		Total	
				Installation	1,564.00	x	1.49	x	1.1320	=	2,637.97	
				closest LI to gypsum sanded floor underlayment per plans FSI/A-602								
107	09 22 13 23 0008		SF	25 Gauge, 16" On Center, Installed On Walls, Double-Leg Resilient Channel, RC2 Furring Channel								$2,604.73
					Quantity		Unit Price		Factor		Total	
				Installation	650.00	x	3.54	x	1.1320	=	2,604.73	
				Resilient channel per plans A-602								
108	09 22 13 23 0010		SF	25 Gauge, 16" On Center, Installed On Ceilings, Double-Leg Resilient Channel, RC2 Furring Channel								$7,418.18
					Quantity		Unit Price		Factor		Total	
				Installation	1,564.00	x	4.19	x	1.1320	=	7,418.18	
				Resilient channel per plans FSI/A-602								
109	09 22 36 23 0005		SF	3.4 LB/SY, Installed On Studs Or Furred Walls, Flat Diamond, Expanded Metal Lath								$3,022.16
					Quantity		Unit Price		Factor		Total	
				Installation	875.00	x	2.53	x	1.1320	=	2,505.97	
				Demolition	800.00	x	0.57	x	1.1320	=	516.19	
				removal of existing stucco and installation of new for new addition and new front entrance								

Work Order Number: 116759.00
Work Order Title: Concord Unit 2950 Conversion

Section - 09

110	09 24 23 00 0002		SF	Scratch/Brown/Finish, Three Coat Troweled StuccoExcludes lath and felt. Interior or exterior, one side.								$10,885.03
					Quantity		Unit Price		Factor		Total	
				Installation	875.00	x	8.53	x	1.1320	=	8,448.97	
				Demolition	800.00	x	2.69	x	1.1320	=	2,436.06	
				removal of existing stucco and installation of new for new addition and new front entrance								
111	09 24 23 00 0004		SF	Scratch/Finish, Two Coat Troweled StuccoExcludes lath and felt. Interior or exterior, one side.								$6,763.70
					Quantity		Unit Price		Factor		Total	
				Installation	875.00	x	5.64	x	1.1320	=	5,586.42	
				Demolition	800.00	x	1.30	x	1.1320	=	1,177.28	
				removal of existing stucco and installation of new for new addition and new front entrance								
112	09 24 23 00 0005		SF	Finish Coat Troweled StuccoExcludes lath and felt. Interior or exterior, one side.								$4,373.48
					Quantity		Unit Price		Factor		Total	
				Installation	875.00	x	3.62	x	1.1320	=	3,585.61	
				Demolition	800.00	x	0.87	x	1.1320	=	787.87	
				removal of existing stucco and installation of new for new addition and new front entrance								
113	09 29 10 00 0006		SF	5/8" Gypsum Board								$14,191.84
					Quantity		Unit Price		Factor		Total	
				Installation	8,248.00	x	1.52	x	1.1320	=	14,191.84	
				for walls and ceilings per plans								
114	09 29 10 00 0038		SF	Up To 10' High, Walls, Tape, Spackle And Finish Gypsum Board								$4,464.11
					Quantity		Unit Price		Factor		Total	
				Installation	6,684.00	x	0.59	x	1.1320	=	4,464.11	
				for walls								
115	09 29 10 00 0038	0048		For ASTM C840 Level 5 High Quality Finish, Add								$3,329.17
					Quantity		Unit Price		Factor		Total	
				Installation	6,684.00	x	0.44	x	1.1320	=	3,329.17	
116	09 29 10 00 0041		SF	Up To 10' High, Ceilings, Tape, Spackle And Finish Gypsum Board								$1,363.25
					Quantity		Unit Price		Factor		Total	
				Installation	1,564.00	x	0.77	x	1.1320	=	1,363.24	
				for ceilings								
117	09 29 10 00 0041	0048		For ASTM C840 Level 5 High Quality Finish, Add								$10,091.55
					Quantity		Unit Price		Factor		Total	
				Installation	15,640.00	x	0.57	x	1.1320	=	10,091.55	
118	09 29 10 00 0044		LF	Up To 10' High, Vertical Corners, Tape, Spackle And Finish Gypsum Board								$1,651.00
					Quantity		Unit Price		Factor		Total	
				Installation	1,236.00	x	1.18	x	1.1320	=	1,651.00	
				walls: 150 vertical corners @ 8' throughout both floors. windows: 36 LF of vertical corners								
119	09 29 10 00 0044	0048		For ASTM C840 Level 5 High Quality Finish, Add								$1,217.26
					Quantity		Unit Price		Factor		Total	
				Installation	1,236.00	x	0.87	x	1.1320	=	1,217.26	
120	09 29 10 00 0047		LF	Up To 10' High, Horizontal Corners, Tape, Spackle And Finish Gypsum Board								$1,209.66
					Quantity		Unit Price		Factor		Total	
				Installation	780.00	x	1.37	x	1.1320	=	1,209.66	
				750 LF of walls and 30 LF of windows								

Work Order Number: 116759.00
Work Order Title: Concord Unit 2950 Conversion

Section - 09

121	09 29 10 00 0047	0048		For ASTM C840 Level 5 High Quality Finish, Add								$891.79
			Installation	Quantity 780.00	x	Unit Price 1.01	x	Factor 1.1320	=	Total 891.79		
122	09 29 10 00 0051		LF	Corner Bead, Galvanized Steel For Gypsum Board								$7,508.15
			Installation	Quantity 2,016.00	x	Unit Price 3.29	x	Factor 1.1320	=	Total 7,508.15		
			walls: 150 vertical corners @ 8' throughout both floors. 750 LF of horizontal corners Windows: 86 LF									
123	09 65 13 13 0003		LF	4" High, 1/8" Thick, Type TV Thermoplastic Vinyl Wall Base, All Colors								$2,844.15
			Installation	Quantity 750.00	x	Unit Price 3.35	x	Factor 1.1320	=	Total 2,844.15		
			750 LF of walls									
124	09 65 23 00 0004		SF	0.16" Overall Thickness, 0.020" Wear Layer, Vinyl Plank Flooring (Armstrong® Luxe Plank™)								$16,907.78
			Installation	Quantity 1,564.00	x	Unit Price 9.55	x	Factor 1.1320	=	Total 16,907.78		
			new flooring throughout per plans									
125	09 91 13 00 0095		SF	1 Coat Primer, Brush/Roller Work, Paint Exterior Stucco Walls								$1,236.14
			Installation	Quantity 1,400.00	x	Unit Price 0.78	x	Factor 1.1320	=	Total 1,236.14		
			paint front and side of building for affected areas corner to corner									
126	09 91 13 00 0097		SF	2 Coats Paint, Brush/Roller Work, Paint Exterior Stucco Walls								$2,599.07
			Installation	Quantity 1,400.00	x	Unit Price 1.64	x	Factor 1.1320	=	Total 2,599.07		
			paint front and side of building for affected areas corner to corner									
127	09 91 23 00 0067		SF	1 Coat Primer, Brush/Roller Work, Paint Interior Plaster/Drywall Walls								$4,161.46
			Installation	Quantity 6,684.00	x	Unit Price 0.55	x	Factor 1.1320	=	Total 4,161.46		
			for walls									
128	09 91 23 00 0069		SF	2 Coats Paint, Brush/Roller Work, Paint Interior Plaster/Drywall Walls								$8,322.92
			Installation	Quantity 6,684.00	x	Unit Price 1.10	x	Factor 1.1320	=	Total 8,322.92		
			for walls									
129	09 91 23 00 0161		SF	1 Coat Primer, Brush/Roller Work, Paint Interior Drywall/Plaster Ceiling								$1,150.79
			Installation	Quantity 1,564.00	x	Unit Price 0.65	x	Factor 1.1320	=	Total 1,150.79		
			for ceilings									
130	09 91 23 00 0163		SF	2 Coats Paints, Brush/Roller Work, Paint Interior Drywall/Plaster Ceiling								$2,071.42
			Installation	Quantity 1,564.00	x	Unit Price 1.17	x	Factor 1.1320	=	Total 2,071.42		
			for ceilings									
131	09 91 23 00 0252		LF	1 Coat Primer, Brush/Roller Work, Paint Interior Wood Door Frame And Trim								$570.53
			Installation	Quantity 600.00	x	Unit Price 0.84	x	Factor 1.1320	=	Total 570.53		
			15 total doors. 40 LF of trim per door									
132	09 91 23 00 0254		LF	2 Coats Paint, Brush/Roller Work, Paint Interior Wood Door Frame And Trime								$1,249.73
			Installation	Quantity 600.00	x	Unit Price 1.84	x	Factor 1.1320	=	Total 1,249.73		
			15 total doors. 40 LF of trim per door									

Work Order Number: 116759.00
Work Order Title: Concord Unit 2950 Conversion

Section - 09

133	09 91 23 00 0275	EA	1 Coat Primer, Brush/Roller Work, Both Faces, Paint Interior Wood Door								$1,153.96
				Quantity		Unit Price		Factor		Total	
			Installation	15.00	x	67.96	x	1.1320	=	1,153.96	
			8 doors on first floor 7 doors on second floor								
134	09 91 23 00 0277	EA	2 Coats Paint, Brush/Roller Work, Both Faces, Paint Interior Wood Door								$2,072.58
				Quantity		Unit Price		Factor		Total	
			Installation	15.00	x	122.06	x	1.1320	=	2,072.58	
			8 doors on first floor 7 doors on second floor								
135	09 91 23 00 0307	LF	1 Coat Primer, Brush/Roller Work, Paint Interior Wood Window Frame And Trim								$163.73
				Quantity		Unit Price		Factor		Total	
			Installation	128.00	x	1.13	x	1.1320	=	163.73	
			8 windows with 128 LF of trim								
136	09 91 23 00 0309	LF	2 Coats Paint, Brush/Roller Work, Paint Interior Wood Window Frame And Trim								$357.89
				Quantity		Unit Price		Factor		Total	
			Installation	128.00	x	2.47	x	1.1320	=	357.89	
			8 windows with 128 LF of trim								
137	09 91 23 00 0350	LF	1 Coat Primer, Brush Work, Paint Interior Wood Trim To 6" Wide								$492.42
				Quantity		Unit Price		Factor		Total	
			Installation	750.00	x	0.58	x	1.1320	=	492.42	
			750 LF of baseboards								
138	09 91 23 00 0352	LF	2 Coats Paint, Paint Interior Wood Trim to 6" Wide								$1,120.68
				Quantity		Unit Price		Factor		Total	
			Installation	750.00	x	1.32	x	1.1320	=	1,120.68	
			750 LF of baseboards								

Subtotal for Section - 09 **$136,489.60**

Section - 10

139	10 28 13 13 0045	EA	Single Roll, Surface Mounted, Stainless Steel, Satin Finish, Toilet Tissue Dispenser (Bobrick B-6857)								$123.83
				Quantity		Unit Price		Factor		Total	
			Installation	1.00	x	88.61	x	1.1320	=	100.31	
			Demolition	1.00	x	20.78	x	1.1320	=	23.52	
			per plans								
140	10 28 13 13 0170	EA	36" Length, 1-1/2" Diameter, Stainless Steel Grab Bar (Bobrick B-6806x36)								$311.68
				Quantity		Unit Price		Factor		Total	
			Installation	3.00	x	91.78	x	1.1320	=	311.68	
			per plans								
141	10 28 13 13 0171	EA	42" Length, 1-1/2" Diameter, Stainless Steel Grab Bar (Bobrick B-6806x42)								$106.14
				Quantity		Unit Price		Factor		Total	
			Installation	1.00	x	93.76	x	1.1320	=	106.14	
			per plans								
142	10 28 13 13 0217	EA	Telescoping 60" To 72" Length, 20-Gauge, 1" Diameter, Stainless Steel Curved Shower Rod With Concealed Mounting (Kohler Expanse K-9349)								$158.19
				Quantity		Unit Price		Factor		Total	
			Installation	1.00	x	118.96	x	1.1320	=	134.66	
			Demolition	1.00	x	20.78	x	1.1320	=	23.52	
			per plans								

Contractor's Price Proposal - Detail Continues..

Work Order Number: 116759.00
Work Order Title: Concord Unit 2950 Conversion

Section - 10

143	10 28 13 13 0322	EA	24" Length, 3/4" Diameter, Stainless Steel Towel Bar (Bobrick B-674)									$133.36
				Quantity		Unit Price		Factor		Total		
			Installation	1.00	x	97.03	x	1.1320	=	109.84		
			Demolition	1.00	x	20.78	x	1.1320	=	23.52		
			per plans									
144	10 28 13 13 0390	EA	20" x 26", Surface Mounted, Aluminum Medicine Cabinet (Kohler K-CB)									$817.76
				Quantity		Unit Price		Factor		Total		
			Installation	1.00	x	676.23	x	1.1320	=	765.49		
			Demolition	1.00	x	46.17	x	1.1320	=	52.26		
			per plans									

Subtotal for Section - 10 **$1,650.96**

Section - 11

145	11 30 13 13 0010	EA	30" Gas Range With Oven									$2,325.17
				Quantity		Unit Price		Factor		Total		
			Installation	2.00	x	985.73	x	1.1320	=	2,231.69		
			Demolition	1.00	x	82.58	x	1.1320	=	93.48		
			remove and save existing for clients attic stock. Installation of 2 new.									
146	11 30 13 13 0015	EA	30" Venting Range Hood (Broan 40000)									$619.32
				Quantity		Unit Price		Factor		Total		
			Installation	2.00	x	242.58	x	1.1320	=	549.20		
			Demolition	1.00	x	61.94	x	1.1320	=	70.12		
			removal of existing and installation of 2 new									
147	11 30 13 13 0048	EA	>16 To 18 CF Top Freezer Refrigerator									$2,550.65
				Quantity		Unit Price		Factor		Total		
			Installation	2.00	x	1,105.96	x	1.1320	=	2,503.89		
			Demolition	1.00	x	41.30	x	1.1320	=	46.75		
			remove and save existing for clients attic stock. Installation of 2 new.									
148	11 30 13 13 0084	EA	1/3 HP Insulated Garbage Disposal (GE GFC320V)									$636.07
				Quantity		Unit Price		Factor		Total		
			Installation	2.00	x	249.98	x	1.1320	=	565.95		
			Demolition	1.00	x	61.94	x	1.1320	=	70.12		
			removal o existing and installation of new									

Subtotal for Section - 11 **$6,131.21**

Section - 12

149	12 36 61 19 0005	SF	1-1/4" Thick, Quartz Agglomerate Countertop With Backsplash									$6,914.26
				Quantity		Unit Price		Factor		Total		
			Installation	50.00	x	122.16	x	1.1320	=	6,914.26		
			25 LF of kitchen countertops									
150	12 36 61 19 0007	EA	Cutout For Sink And/Or Faucet In Quartz Agglomerate Countertop									$313.61
				Quantity		Unit Price		Factor		Total		
			Installation	2.00	x	138.52	x	1.1320	=	313.61		
			2 kitchen sinks									

Subtotal for Section - 12 **$7,227.87**

Section - 22

Work Order Number: 116759.00
Work Order Title: Concord Unit 2950 Conversion

Section - 22

151	22 01 40 81 0004	EA	Removal And Replacement Of Chrome Supply Lines To Sink/Lavatory, Pair								$297.60
				Quantity		Unit Price		Factor		Total	
			Installation	10.00	x	26.29	x	1.1320	=	297.60	
			replace supply lines in kitchens and bathrooms								
152	22 01 40 81 0006	EA	Removal And Replacement Of Double Bowl Sink/Lavatory Drain Line								$128.73
				Quantity		Unit Price		Factor		Total	
			Installation	2.00	x	56.86	x	1.1320	=	128.73	
			new drain lines								
153	22 11 16 00 0003	LF	3/4" Schedule 40 Threaded Galvanized Steel Pipe With 150 LB Malleable Iron Fitting AssemblyIncludes all hangers and all galvanized malleable iron fittings (couplings, elbows, tees and reducer fittings). All hangers are complete assemblies. Not for use where detail is available.								$7,127.07
				Quantity		Unit Price		Factor		Total	
			Installation	300.00	x	18.30	x	1.1320	=	6,214.68	
			Demolition	200.00	x	4.03	x	1.1320	=	912.39	
			gas line piping								
154	22 11 16 00 0901	LF	3/4" Inside Diameter Copper Pipe/Tubing Type L AssemblyIncludes all hangers and couplings, elbow, tee, reducer fittings. All hangers are complete assemblies. Not for use where detail is available.								$19,234.38
				Quantity		Unit Price		Factor		Total	
			Installation	650.00	x	24.17	x	1.1320	=	17,784.29	
			Demolition	350.00	x	3.66	x	1.1320	=	1,450.09	
			water line copper piping								
155	22 12 23 13 0002	EA	80 Gallon ASME Rated Tank, 150PSI, Jacketed, Insulated, Glass Lined Water Heater Storage Tank (TJ-80A)								$424.28
				Quantity		Unit Price		Factor		Total	
			Installation	0.00	x	2,141.02	x	1.1320	=	0.00	
			Demolition	1.00	x	374.81	x	1.1320	=	424.28	
			removal of existing water heater								
156	22 13 16 00 0509	LF	4" Schedule 40 Polyvinyl Chloride (PVC) DWV Pipe AssemblyIncludes all fittings, couplings and hangers. Fittings are assumed every 10'. Not for use where detail is available.								$20,147.62
				Quantity		Unit Price		Factor		Total	
			Installation	400.00	x	39.47	x	1.1320	=	17,872.02	
			Demolition	275.00	x	7.31	x	1.1320	=	2,275.60	
			Sewer and vent piping								
157	22 34 13 00 0011	EA	7.4 GPM, Outdoor Mount, Instantaneous, Tankless, Gas Domestic Water Heater (Rheem RTG-74XN)								$5,196.24
				Quantity		Unit Price		Factor		Total	
			Installation	2.00	x	2,295.16	x	1.1320	=	5,196.24	
			installation of 2 new water heaters								
158	22 41 16 16 0003	EA	33" x 21" x 6-1/2" Stainless Steel Kitchen Sink, Double Bowl, 20 Gauge (Elkay D233213)								$1,488.27
				Quantity		Unit Price		Factor		Total	
			Installation	2.00	x	607.23	x	1.1320	=	1,374.77	
			Demolition	1.00	x	100.27	x	1.1320	=	113.51	
			removal of existing and installation of new.								
159	22 41 39 00 0006	EA	Chrome Two Handle Kitchen Faucet With Spray, Three Hole Installation, 8" Center (Delta 2402LF-LHP+H215)								$454.33
				Quantity		Unit Price		Factor		Total	
			Installation	2.00	x	177.25	x	1.1320	=	401.29	
			Demolition	1.00	x	46.85	x	1.1320	=	53.03	
			removal of existing and installation of new.								

Contractor's Price Proposal - Detail Continues..

Work Order Number: 116759.00
Work Order Title: Concord Unit 2950 Conversion

Section - 22

160	22 42 13 13 0027	EA	2 Piece Tank Type, Pressure Assisted, Siphon Jet, Floor Mounted, Back Outlet, Handicap Accessible, Elongated Vitreous China Water Closet (American Standard Yorkville™ ADA)								$1,300.36
				Quantity		Unit Price		Factor		Total	
			Installation	1.00	x	1,051.28	x	1.1320	=	1,190.05	
			Demolition	1.00	x	97.45	x	1.1320	=	110.31	
			remove existing and install new ADA toilet								
161	22 42 16 13 0009	EA	27" x 20" Wheelchair Accessible, Vitreous China Wall Hung Lavatory (American Standard Wheel Chair Users)								$776.98
				Quantity		Unit Price		Factor		Total	
			Installation	1.00	x	623.60	x	1.1320	=	705.92	
			Demolition	1.00	x	62.78	x	1.1320	=	71.07	
			remove existing and install new ADA sink, faucet, and drain cover.								
162	22 42 19 00 0027	EA	3 Piece Tub/Shower Surrounds, 32" x 72" Side Walls, 48" x 72" Back, (Swanstone SK-324872)								$3,166.32
				Quantity		Unit Price		Factor		Total	
			Installation	1.00	x	2,797.10	x	1.1320	=	3,166.32	
			new tub/shower for ADA bathroom								
163	22 42 39 00 0042	EA	Single Supply EcoPower® Faucet, Polished Chrome Finish (Toto TEL3LS10#CP)								$709.36
				Quantity		Unit Price		Factor		Total	
			Installation	1.00	x	626.64	x	1.1320	=	709.36	
			ADA sink, faucet, and drain cover.								
164	22 42 39 00 0064	EA	Three Lever Handle, Chrome Shower And Tub Filler (American Standard Colony Soft 3375.502)								$293.63
				Quantity		Unit Price		Factor		Total	
			Installation	1.00	x	218.72	x	1.1320	=	247.59	
			Demolition	1.00	x	40.67	x	1.1320	=	46.04	
			per plans								
165	22 42 39 00 0210	EA	Lavatory Protective Enclosure (IPS Truebro Lav Shield)								$350.49
				Quantity		Unit Price		Factor		Total	
			Installation	2.00	x	154.81	x	1.1320	=	350.49	
			drain cover for ADA kitchen and bathroom sink								
166	22 42 39 00 0217	EA	1/2" NPT x 3/8" Compression Chrome, Quarter Turn Dual Angle Stop (SharkBite 25558)								$555.72
				Quantity		Unit Price		Factor		Total	
			Installation	10.00	x	41.22	x	1.1320	=	466.61	
			Demolition	8.00	x	9.84	x	1.1320	=	89.11	
			new angle stops installed in bathrooms and kitchens								

Subtotal for Section - 22 **$61,651.38**

Section - 23

167	23 05 93 00 0017	EA	Balancing HVAC Duct System, Floor Height Supply, Return, Exhaust, Register And Diffuser								$61.88
				Quantity		Unit Price		Factor		Total	
			Installation	1.00	x	54.66	x	1.1320	=	61.88	
			required setup, balancing, and charging for new system								
168	23 09 23 53 0284	EA	Scheduling Program, HVAC (AHU, RTU, AC Units, Etcetera) Programming Measures								$3,880.60
				Quantity		Unit Price		Factor		Total	
			Installation	1.00	x	3,428.09	x	1.1320	=	3,880.60	
			required setup, balancing, and charging for new system								

Work Order Number: 116759.00
Work Order Title: Concord Unit 2950 Conversion

Section - 23

169	23 31 13 16 0063	EA	4" Diameter, 26 Gauge, 2" WG And Less (Class C), Galvanized Sheet Metal Round And Flat-Oval Connector									$240.41
				Quantity		Unit Price		Factor		Total		
			Installation	14.00	x	15.17	x	1.1320	=	240.41		
			exhaust ducting for dyer per plans									
170	23 33 13 13 0006	EA	12" Diameter Radial Opposed Blade Damper Round, Steel Construction, Manual Operated									$140.78
				Quantity		Unit Price		Factor		Total		
			Installation	1.00	x	113.45	x	1.1320	=	128.43		
			Demolition	1.00	x	10.91	x	1.1320	=	12.35		
			HVAC per plans									
171	23 33 46 00 0008	LF	12" Diameter Flexible Duct, R8.0 Insulated With Polyester Inner Liner And Metallized Outer Jacket									$2,231.74
				Quantity		Unit Price		Factor		Total		
			Installation	100.00	x	15.36	x	1.1320	=	1,738.75		
			Demolition	130.00	x	3.35	x	1.1320	=	492.99		
			HVAC per plans									
172	23 33 46 00 0020	EA	12" Diameter Flexible Duct Collar, Spin In Type, Sheet Metal, With Damper									$100.97
				Quantity		Unit Price		Factor		Total		
			Installation	1.00	x	76.62	x	1.1320	=	86.73		
			Demolition	1.00	x	12.58	x	1.1320	=	14.24		
			HVAC per plans									
173	23 34 16 00 0127	EA	30" Diameter Wheel, 2 HP, 10,192 CFM At 1/4" Static Pressure, Belt Drive, Kitchen Upblast Exhaust Fan115/208-230/60/3. Includes heat baffle, grease baffle and disconnect switch.									$9,622.60
				Quantity		Unit Price		Factor		Total		
			Installation	2.00	x	4,153.39	x	1.1320	=	9,403.27		
			Demolition	1.00	x	193.75	x	1.1320	=	219.33		
			removal of one existing and installation of 2 new									
174	23 34 16 00 0275	EA	109 CFM, Ceiling/Wall Mounted, Metal Intake Grille, Heavy Duty/Continuous Operation Exhaust Fan (Broan® LoSone® Ventilator L100MG)									$897.54
				Quantity		Unit Price		Factor		Total		
			Installation	2.00	x	379.30	x	1.1320	=	858.74		
			Demolition	1.00	x	34.28	x	1.1320	=	38.80		
			exhaust fan per plans EF-1									
175	23 37 13 13 0080	EA	20" x 20" Single Deflection Return/Exhaust Register, Aluminum, Opposed Blade Damper, Wall/Ceiling									$319.70
				Quantity		Unit Price		Factor		Total		
			Installation	1.00	x	265.64	x	1.1320	=	300.70		
			Demolition	1.00	x	16.78	x	1.1320	=	18.99		
			HVAC per plans									
176	23 37 13 13 0225	EA	18" x 8" 4-Way Adjustable Wall Supply Grille, Adjustable Deflection, Aluminum Construction									$2,395.67
				Quantity		Unit Price		Factor		Total		
			Installation	7.00	x	275.90	x	1.1320	=	2,186.23		
			Demolition	11.00	x	16.82	x	1.1320	=	209.44		
			HVAC per plans									
177	23 54 16 13 0007	EA	120 MBH, 2,000 CFM Up/Horizontal Flow Multi-Speed, Two Stage 96% AFUE Gas FurnaceBlower cooling capacity up to 5 tons.									$5,879.99
				Quantity		Unit Price		Factor		Total		
			Installation	2.00	x	2,597.17	x	1.1320	=	5,879.99		
			per plans. SH-1 and SH-2 wall mounted furnaces									

Work Order Number: 116759.00
Work Order Title: Concord Unit 2950 Conversion

Section - 23

178	23 81 49 00 0020	EA	7-1/2 Ton Indoor Section Split Heat Pump Packaged Unit, Horizontal Upflow With 10 KW Electric Heat									$4,932.97
				Quantity		Unit Price		Factor		Total		
			Installation	1.00	x	4,047.74	x	1.1320	=	4,582.04		
			Demolition	1.00	x	310.01	x	1.1320	=	350.93		
			new furnace per clients request									

Subtotal for Section - 23 **$30,704.85**

Section - 26

179	26 01 20 91 0002	EA	Lock Out/Tag Out Local DisconnectExcludes tag or padlock See CSI section 26 01 20 91-0004 for padlock, 26 01 20 91-0005 for tag(s).									$523.83
				Quantity		Unit Price		Factor		Total		
			Installation	15.00	x	30.85	x	1.1320	=	523.83		
			LOTO of existing circuits									
180	26 05 19 16 0402	MLF	#12 AWG, 3 Conductors, 600 Volt, Type NM, Copper, Non-Metallic Sheathed Cable									$12,214.42
				Quantity		Unit Price		Factor		Total		
			Installation	4.00	x	2,697.53	x	1.1320	=	12,214.42		
			for new electrical runs per plans									
181	26 05 19 16 0402	0377	For Installation In Wood Stud Wall (Includes Drilling), Add									$1,272.82
				Quantity		Unit Price		Factor		Total		
			Installation	4.00	x	281.10	x	1.1320	=	1,272.82		
182	26 09 23 00 0109	EA	Wall Switch Replacement Occupancy Sensor, Single GangIncludes integral occupancy sensor and relay.									$1,204.00
				Quantity		Unit Price		Factor		Total		
			Installation	10.00	x	106.36	x	1.1320	=	1,204.00		
			per plans									
183	26 09 23 00 0235	EA	Passive Infrared, Wall Switch Mounted, Wired Occupancy Sensor (Encelium PW-100-24)Excludes GB II cable.									$586.31
				Quantity		Unit Price		Factor		Total		
			Installation	2.00	x	258.97	x	1.1320	=	586.31		
			for bathrooms									
184	26 24 13 00 0213	EA	800 Amperes, 480 Volt, 4 Wire, Switchboard Incoming No Switch Circuit									$5,781.11
				Quantity		Unit Price		Factor		Total		
			Installation	1.00	x	4,332.49	x	1.1320	=	4,904.38		
			Demolition	1.00	x	774.50	x	1.1320	=	876.73		
			for new main panel to new units subpanels									
185	26 24 16 00 0470	EA	200 Ampere Rating, Main Breaker, Indoor, 42 Circuit, 4 Wire, 120/208 Volt, Assembled Panelboard With 20 Ampere, 1 Pole Plug-In Breakers									$7,931.90
				Quantity		Unit Price		Factor		Total		
			Installation	2.00	x	3,075.97	x	1.1320	=	6,964.00		
			Demolition	1.00	x	855.04	x	1.1320	=	967.91		
			1 new sub panel for each unit									
186	26 27 13 00 0125	EA	Single Phase M-90 Meter, Socket, NEMA 3R Enclosure									$6,442.28
				Quantity		Unit Price		Factor		Total		
			Installation	6.00	x	905.76	x	1.1320	=	6,151.92		
			Demolition	5.00	x	51.30	x	1.1320	=	290.36		
			installation of new meters for building									
187	26 27 26 00 0009	EA	20 Amperes, 1 Gang, GFI, Duplex Receptacle Assembly									$3,825.42
				Quantity		Unit Price		Factor		Total		
			Installation	30.00	x	96.40	x	1.1320	=	3,273.74		
			Demolition	15.00	x	32.49	x	1.1320	=	551.68		
			All new GFI outlets throughout per clients request									

Contractor's Price Proposal - Detail Continues..

Work Order Number: 116759.00
Work Order Title: Concord Unit 2950 Conversion

Section - 26

188	26 27 26 00 0125		EA	20 Amperes, 125 Volt Single Specification Grade Tamper Resistant ReceptaclePass & Seymour TR5351.									$1,944.32
					Quantity		Unit Price		Factor		Total		
				Installation	40.00	x	34.39	x	1.1320	=	1,557.18		
				Demolition	40.00	x	8.55	x	1.1320	=	387.14		
				all new outlets throughout per clients request									
189	26 27 26 00 0138		EA	1 Gang, 20 Amperes, 120/277 Volt, SPST, Switch Assembly									$3,327.23
					Quantity		Unit Price		Factor		Total		
				Installation	25.00	x	85.08	x	1.1320	=	2,407.76		
				Demolition	25.00	x	32.49	x	1.1320	=	919.47		
				25 switches total in both units									
190	26 51 19 00 0312		EA	8" Diameter, 1,200 Lumens, Recessed LED Downlight With Open Trim (Lithonia DOM8 LED)									$7,780.09
					Quantity		Unit Price		Factor		Total		
				Installation	19.00	x	324.11	x	1.1320	=	6,970.96		
				Demolition	19.00	x	37.62	x	1.1320	=	809.13		
				19 new slim LED lights per plans and owners request									
191	26 51 19 00 0312	0543	EA	For Dimming Driver And Sensor Switch nLight Dimming Relay, Add									$1,339.77
					Quantity		Unit Price		Factor		Total		
				Installation	17.00	x	69.62	x	1.1320	=	1,339.77		
192	26 51 19 00 0430		EA	5" Shallow, Insulated Ceiling, Air-Tite New Construction (Cooper Halo H25ICAT)									$314.84
					Quantity		Unit Price		Factor		Total		
				Installation	3.00	x	92.71	x	1.1320	=	314.84		
				3 new 5" slim LED lights per plans									
193	26 51 19 00 0470		EA	2-1/2" Diameter x 15-1/2" High, Polished Nickel, LED Wall Sconce (Hudson Valley Lighting SHAW 1200-PN)									$1,017.22
					Quantity		Unit Price		Factor		Total		
				Installation	2.00	x	415.10	x	1.1320	=	939.79		
				Demolition	2.00	x	34.20	x	1.1320	=	77.43		
				2 new wall sconces per plans in bathrooms									
194	26 56 19 00 0031		EA	9,503 Lumens, 77 Watt, 3 LEDs, Wall Mounted Security Fixture (Jarvis Corp WMFT-350)									$1,530.14
					Quantity		Unit Price		Factor		Total		
				Installation	3.00	x	388.10	x	1.1320	=	1,317.99		
				Demolition	3.00	x	62.47	x	1.1320	=	212.15		
				replace 3 existing exterior lights per clients request									

Subtotal for Section - 26 **$57,035.70**

Section - 31

195	31 05 16 00 0002		CY	#2 Stone Aggregate Fill (1-1/2" To 2-1/2" Clean)									$1,295.01
					Quantity		Unit Price		Factor		Total		
				Installation	25.00	x	45.76	x	1.1320	=	1,295.01		
				4" deep, 200 LF, 2' wide base for backfill for trenching. 20 CY for footings, and slabs									
196	31 05 16 00 0002	0053		For Up To 8, Add									$51.79
					Quantity		Unit Price		Factor		Total		
				Installation	5.00	x	9.15	x	1.1320	=	51.79		
197	31 11 00 00 0008		ACR	Clearing By Machine - Light Brush Without Grub									$174.72
					Quantity		Unit Price		Factor		Total		
				Installation	0.50	x	308.69	x	1.1320	=	174.72		
				clear out weeds in back yard									

Contractor's Price Proposal - Detail Continues..

Work Order Number: 116759.00
Work Order Title: Concord Unit 2950 Conversion

Section - 31

198	31 11 00 00 0017	CY	Hand Loading Of Cleared And Grubbed Material									$849.91
				Quantity		Unit Price		Factor		Total		
			Installation	20.00	x	37.54	x	1.1320	=	849.91		
			clear out weeds in back yard									
199	31 23 16 13 0007	CY	Excavation For Trenching By Hand In SoilIncludes stockpiling excess materials and trimming sides and bottom of trench.									$3,505.24
				Quantity		Unit Price		Factor		Total		
			Installation	25.00	x	123.86	x	1.1320	=	3,505.24		
			20" deep, 200 LF, 2' wide									
200	31 23 16 13 0011	CY	Backfilling or Placing Subbase for Trenches with Imported or Stockpiled Materials by Hand									$973.80
				Quantity		Unit Price		Factor		Total		
			Installation	25.00	x	34.41	x	1.1320	=	973.80		
			20" deep, 200 LF, 2' wide									
201	31 23 16 13 0014	CY	Compaction of Fill or Subbase for Trenches by Hand									$1,098.61
				Quantity		Unit Price		Factor		Total		
			Installation	25.00	x	38.82	x	1.1320	=	1,098.61		
			20" deep, 200 LF, 2' wide									
202	31 23 16 36 0009	CY	Excavation For Building Foundations And Other Structures By Hand in Soil									$6,309.43
				Quantity		Unit Price		Factor		Total		
			Installation	45.00	x	123.86	x	1.1320	=	6,309.43		
			for footings and slab									
203	31 23 16 36 0019	CY	Backfilling Around Building Foundations And Other Structures By Hand									$1,335.53
				Quantity		Unit Price		Factor		Total		
			Installation	20.00	x	58.99	x	1.1320	=	1,335.53		
			for footings and slab									
204	31 23 16 36 0022	CY	Compaction Of Fill Or Subbase For Building Foundations and Other Structures by Hand									$1,976.98
				Quantity		Unit Price		Factor		Total		
			Installation	45.00	x	38.81	x	1.1320	=	1,976.98		
			for footings and slab									

Subtotal for Section - 31 **$17,571.02**

Section - 32

205	32 16 13 13 0016	LF	6" x 12" Cast In Place Concrete Gutter With 6" Curb And Face - Straight									$609.07
				Quantity		Unit Price		Factor		Total		
			Installation	15.00	x	24.92	x	1.1320	=	423.14		
			Demolition	15.00	x	10.95	x	1.1320	=	185.93		
			for parking lot ADA modifications									
206	32 16 23 00 0002	SF	4" Cast In Place Concrete Sidewalk									$586.15
				Quantity		Unit Price		Factor		Total		
			Installation	60.00	x	8.63	x	1.1320	=	586.15		
			for parking lot ADA modifications									
207	32 16 23 00 0002	0094	For Up To 100, Add									$248.59
				Quantity		Unit Price		Factor		Total		
			Installation	60.00	x	3.66	x	1.1320	=	248.59		
208	32 16 23 00 0008	EA	Finish Concrete Handicap Drop Section In SidewalkExcludes patterned (tactile) finish.									$145.65
				Quantity		Unit Price		Factor		Total		
			Installation	1.00	x	128.67	x	1.1320	=	145.65		
			for parking lot ADA modifications									

Contractor's Price Proposal - Detail Continues..

Work Order Number: 116759.00
Work Order Title: Concord Unit 2950 Conversion

Section - 32

209	32 17 23 13 0074	SF	Solid Area, Painted Pavement Marking For Parking AreasUse task for lines >12" wide, stop bars, transverse lines, diagonal lines, crossing lanes, etc.									$281.82
				Quantity		Unit Price		Factor		Total		
			Installation	64.00	x	3.89	x	1.1320	=	281.82		
			for parking lot ADA modifications									
210	32 17 23 13 0088	EA	Handicap Symbol For Van Parking Stalls, Painted Pavement Marking For Parking AreasApproximate overall dimensions: 4-1/3' width x 5' height. White or blue symbol. Excludes striping.									$86.15
				Quantity		Unit Price		Factor		Total		
			Installation	2.00	x	38.05	x	1.1320	=	86.15		
			for parking lot ADA modifications									
211	32 17 26 00 0003	SF	Embedded, VPC Truncated Dome Detectable Warning SurfaceAlso raised strips or directional bars. All colors.									$832.25
				Quantity		Unit Price		Factor		Total		
			Installation	16.00	x	45.95	x	1.1320	=	832.25		
			new truncated domes per A-501									
212	32 31 23 00 0006	LF	6' High Privacy Tongue And Groove Vinyl Fence									$3,593.82
				Quantity		Unit Price		Factor		Total		
			Installation	45.00	x	63.16	x	1.1320	=	3,217.37		
			Demolition	45.00	x	7.39	x	1.1320	=	376.45		
			removal of existing vinyl fence and installation of new due to ADA width requirements . includes a 4' wide ADA gate									
213	32 31 23 00 0051	EA	6' High x 4' Wide Vinyl Gate For Privacy Or Semi-Privacy Fence And Hinge Set									$757.38
				Quantity		Unit Price		Factor		Total		
			Installation	1.00	x	611.32	x	1.1320	=	692.01		
			Demolition	1.00	x	57.74	x	1.1320	=	65.36		
			removal of existing vinyl fence and installation of new due to ADA width requirements . includes a 4' wide ADA gate									
214	32 31 23 00 0078	EA	Stainless Steel Latch Set									$124.46
				Quantity		Unit Price		Factor		Total		
			Installation	1.00	x	109.95	x	1.1320	=	124.46		
			removal of existing vinyl fence and installation of new due to ADA width requirements . includes a 4' wide ADA gate									

Subtotal for Section - 32 **$7,265.34**

Proposal Total **$610,749.96**

This total represents the correct total for the proposal. Any discrepancy between line totals, sub-totals and the proposal total is due to rounding.

The Percentage of NPP on this Proposal: **%**

Subcontractor Listing

Date: June 06, 2023

Re:

IQC Master Contract #:	CA-R7-GB06-123021-MDJ
Work Order #:	116759.00
Owner PO #:	
Title:	Concord Unit 2950 Conversion
Contractor:	MDJ Management
Proposal Value:	$610,749.96

Name of Contractor	Duties	Amount	%
Janus Corporation		$100,000.00	16.37
Refined Construction		$450,000.00	73.68

EXHIBIT A

GORDIAN®

Work Order Signature Document

EZIQC Contract No.: CA-R7-GB06-123021-MDJ

[X] **New Work Order** [ ] **Modify an Existing Work Order**

Work Order Number.:	116760.00	Work Order Date:	06/06/2023
Work Order Title:	Concord Unit 2956 Conversion		
Owner Name:	Oxnard Housing Authority	Contractor Name:	MDJ Management
Contact:	Fredi Contreras	Contact:	Matt McMillon
Phone:	805-890-8319	Phone:	310-490-1521

Work to be Performed

Work to be performed as per the Final Detailed Scope of Work Attached and as per the terms and conditions of Sourcewell EZIQC Contract No CA-R7-GB06-123021-MDJ.

Brief Work Order Description:

Time of Performance Estimated Start Date:

Estimated Completion Date:

Liquidated Damages Will apply: [ ] Will not apply: [X]

Work Order Firm Fixed Price: $610,749.96

Owner Purchase Order Number:

Approvals

Oxnard Housing Authority Date

MDJ Management Date

Detailed Scope of Work

To: Matt McMillon
MDJ Management
531 Main St #611
El Segundo, CA 90245
310-490-1521

From: Fredi Contreras
Oxnard Housing Authority
300 N. Marquita Street
Oxnard, CA 93030
805-890-8319

Date Printed: June 06, 2023

Work Order Number: 116760.00

Work Order Title: Concord Unit 2956 Conversion

Brief Scope:

☐ **Preliminary** ☐ **Revised** [X] **Final**

The following items detail the scope of work as discussed at the site. All requirements necessary to accomplish the items set forth below shall be considered part of this scope of work.

See attached

Subject to the terms and conditions of ezIQC Contract **CA-R7-GB06-123021-MDJ**.

MDJ Management _____ Date _____

Oxnard Housing Authority _____ Date _____

MDJ Management, LLC
License # 1044711
DIR # 1000061313
531 Main St. #611 El Segundo CA 90245
310-490-1521

Job Name: 2956 Concord ADA Conversion
Location: 2956 Concord Dr. Oxnard, CA 93036
Customer: Oxnard Housing Authority

Submission Date: 5/31/23

Detailed Scope of Work

Demolition

- Demolition of existing apartment per plans
- Per Asbestos Survey report provided by client all walls, ceilings and floors to be considered ACM
    - Demolition of unit to be performed by certified hazardous material demolition company

Installation/Buildout

- Saw cutting of slab and demolition of concrete for new plumbing
- Excavation for new plumbing and new concrete footings for addition
- All framing throughout including new walls and soffits
- New rough and finish plumbing throughout
- New electrical rough including new panel per plan
- Concrete work:
    - Pour new footings for addition
    - Pour back all open trenches inside the unit
    - Pour slab for addition
    - Our sidewalk as required
- New windows and doors
- New Insulation
- HVAC ductwork, registers, and wall heaters.
    - Includes new forced air unit
- Drywall throughout
- Lath, stucco, and color coat to match existing
- Roofing, fascia, and gutters for new addition
- Interior paint
- New Flooring and base
- New kitchens, countertops, fixtures, sinks and appliances.

- New bathroom fixtures per plan
- Paint exterior of building
- Site work:
    - New sidewalks
    - Handicap ramp with truncated domes
    - Handicap striping
    - New signage at Handicap stall

Installation/Buildout added by Client NOT included on plans

- Remove and replace all outlets and switches throughout, even on all existing walls
- Remove and replace exterior lighting with LED lighting
    - Match existing 3 fixtures
- Install MDF baseboards
    - Instead of called out cove base
- Remove and replace all interior doors. Complete list of doors from plans as well as clients request:
    - Demo of 3 utility closet, 2 sliding closet, 5 bedroom, and 2 bathroom doors
    - Installation of 2 utility closet, 3 sliding closet, 3 bedroom, 2 bathroom doors, and 1 front door
- Clean up existing back yard, the weeds are 5 feet high
    - Includes weed weed whacking and removal of all dead weeds
- Remove and replace one section of vinyl fence because it is not wide enough for ADA width along concrete path to front door
    - 45 feet x 6 feet high
    - (1) One 4' Gate
    - Includes widening the concrete by one foot

Notes:

- All work to be performed per plans provided to MDJ
- Any additional add on items will be at the request of Customer. Any adjustment shall be an additional cost.
- Price includes all labor (**Normal Working Hours - Davis Bacon Wages**), materials, equipment to complete this scope of work.
- Construction Exclusions:
    - New Washer and Dryer not included in contract.

CLARIFICATIONS AND EXCLUSIONS:

- Warranty
    - One year warranty against workmanship
    - Manufacturer's warranty varies
- We exclude plans, permits, permit fees, related fees, testing, inspection, survey, and engineering unless specified above
- We exclude utilities and hazardous or contaminated material.
- Construction water, power, and sanitary facilities available on site for MDJ's use at no cost.
- We exclude premium time.
- We exclude anything not specifically mentioned above.
- MDJ reserves the right to review, change, and/or delete any provisions of any prime contract or subcontract, which results from this quotation.

- All terms to be net 30 days in full upon receipt of invoice. Interest will be charged at the rate of 2% monthly on the unpaid balance.

BID PRICE: See Price Proposal

All work to be completed in a substantial and workmanlike manner according to standard practices for the sum of **See Price Proposal.** Any additional add on items will be at the request of Customer. Any adjustment shall be an additional cost.

Bid price is good for thirty (30) days only.

Any controversy or claim based on, arising out of, or relating to this agreement, or breach thereof, including any claim based on the work performed pursuant to this agreement, shall be submitted to the American Arbitration Association for binding arbitration in accordance with its rules. If any arbitration, legal action is brought to enforce this agreement, or arising out of or relating to the agreement, the prevailing party shall be entitled to recover from the non-prevailing party reasonable attorney fees and costs incurred, in addition to any and all other relief to which that party may be entitled.

Submitted by:

Matthew McMillon
President MDJ
310.490.1521
matt@buildwithmdj.com

Contractor's Price Proposal - Summary

Date: June 06, 2023

Re:

IQC Master Contract #:	CA-R7-GB06-123021-MDJ
Work Order #:	116760.00
Owner PO #:	
Title:	Concord Unit 2956 Conversion
Contractor:	MDJ Management
Proposal Value:	$610,749.96

Section - 01	**$27,922.15**
Section - 02	**$124,779.67**
Section - 03	**$44,628.54**
Section - 06	**$30,807.26**
Section - 07	**$39,946.76**
Section - 08	**$16,937.65**
Section - 09	**$136,489.60**
Section - 10	**$1,650.96**
Section - 11	**$6,131.21**
Section - 12	**$7,227.87**
Section - 22	**$61,651.38**
Section - 23	**$30,704.85**
Section - 26	**$57,035.70**
Section - 31	**$17,571.02**
Section - 32	**$7,265.34**
Proposal Total	**$610,749.96**

Thisl total represents the correct total for the proposal. Any discrepancy between line totals, sub-totals and the proposal total is due to rounding.

The Percentage of NPP on this Proposal: %

Contractor's Price Proposal - Detail

Date: June 06, 2023

Re:

IQC Master Contract #:	CA-R7-GB06-123021-MDJ
Work Order #:	116760.00
Owner PO #:	
Title:	Concord Unit 2956 Conversion
Contractor:	MDJ Management
Proposal Value:	$610,749.96

	Sect.	Item	Mod.	UOM	Description	Line Total
Labor	Equip.	Material	(Excludes)			

Section - 01

1	01 22 16	00 0002		EA	Reimbursable FeesReimbursable Fees will be paid to the contractor for eligible costs as directed by Owner. Insert the appropriate quantity to adjust the base cost to the actual Reimbursable Fee. If there are multiple Reimbursable Fees, list each one separately and add a comment in the "note" block to identify the Reimbursable Fee (e.g. sidewalk closure, road cut, various permits, extended warranty, expedited shipping costs, etc.). A copy of each receipt shall be submitted with the Price Proposal.	$13,147.20

	Quantity		Unit Price		Factor		Total
Installation	11,952.00	x	1.00	x	1.1000	=	13,147.20

Bond = $597,602 x 2%

2	01 74 19	00 0016		EA	40 CY Dumpster (5 Ton) "Construction Debris"Includes delivery of dumpster, rental cost, pick-up cost, hauling, and disposal fee. Non-hazardous material.	$11,002.63

	Quantity		Unit Price		Factor		Total
Installation	12.00	x	809.97	x	1.1320	=	11,002.63

10 dumpsters for abatement debris: cabinets, drywall from entire house, shower, toilet, stucco, insulation, ...
2 dumpsters for construction debris: drywall cuts, lumber cuts, basic trash

3	01 74 19	00 0019		EA	15 CY Low-Boy Dumpster Mixed RecyclableFor mixed dirt, rock, concrete brick or asphalt with no trash or organics. Includes service to deliver and pick-up dumpster, hauling, rental and disposal fee.	$3,772.32

	Quantity		Unit Price		Factor		Total
Installation	4.00	x	833.11	x	1.1320	=	3,772.32

for removal of excavated soil for footings, slab, trenching

Subtotal for Section - 01 **$27,922.15**

Section - 02

4	02 41 19	13 0063		LF	Rod Reinforced Concrete Slab Up To 4" Depth, Saw Cut	$2,499.46

	Quantity		Unit Price		Factor		Total
Installation	400.00	x	5.52	x	1.1320	=	2,499.46

sawcut existing slab to trench for new electrical and plumbing runs as needed per plans

5	02 82 33	00 0067		SF	>2,500 To 10,000 SF, Single Layer Gypsum Wall Board, Asbestos Abatement And Disposal	$62,951.52

	Quantity		Unit Price		Factor		Total
Installation	6,684.00	x	8.32	x	1.1320	=	62,951.52

demolition throughout. All drywall mud is hot. ceilings and walls

6	02 82 33	00 0074		SF	>500 To 2,500 SF, Gypsum Wall Board (Or Backer Board) With Ceramic Tile And Mastic, Asbestos Abatement And Disposal	$12,439.55

	Quantity		Unit Price		Factor		Total
Installation	550.00	x	19.98	x	1.1320	=	12,439.55

demolition of bathrooms tile and backer board walls and floor as well as kitchen tile

7	02 82 33	00 0087		SF	>500 To 2,500 SF, Spray On Acoustical Ceiling, Asbestos Abatement And Disposal	$16,659.92

	Quantity		Unit Price		Factor		Total
Installation	1,564.00	x	9.41	x	1.1320	=	16,659.92

demolition

Work Order Number: 116760.00
Work Order Title: Concord Unit 2956 Conversion

Section - 02

8	02 82 33 00 0101		SF	>500 To 2,500 SF, Single Layer Or First Of Multiple Layers, Floor Tile, Asbestos Abatement And Disposal									$10,959.07
				Installation	Quantity 1,564.00	x	Unit Price 6.19	x	Factor 1.1320	=	Total 10,959.07		
				demolition of 2 layers of floor tile									
9	02 82 33 00 0101	0001		For Each Additional Layer, Add									$2,744.19
				Installation	Quantity 1,564.00	x	Unit Price 1.55	x	Factor 1.1320	=	Total 2,744.19		
10	02 82 33 00 0245		CF	>100 To 250 CF, Asbestos Contaminated Debris, Asbestos Abatement And Disposal									$13,881.15
				Installation	Quantity 250.00	x	Unit Price 49.05	x	Factor 1.1320	=	Total 13,881.15		
				demolition of all cabinets and vanities per plans. They are attached to the walls so removal would disturb drywall material that is hot. This is for kitchen and bathroom									
11	02 82 33 00 0333		SF	High Efficiency Particulate Air (HEPA) Vacuum And Cleaning Of Contaminated Area									$1,186.20
				Installation	Quantity 1,564.00	x	Unit Price 0.67	x	Factor 1.1320	=	Total 1,186.20		
				demolition part of abatement procedures									
12	02 89 00 00 0021		EA	3 Stage Portable Personnel Decontamination Wash FacilityIncludes connection to negative air system.									$907.07
				Installation	Quantity 1.00	x	Unit Price 801.30	x	Factor 1.1320	=	Total 907.07		
				demolition part of abatement procedures									
13	02 89 00 00 0023		EA	Portable Waste Decontamination UnitIncludes connection to negative air system.									$551.54
				Installation	Quantity 1.00	x	Unit Price 487.23	x	Factor 1.1320	=	Total 551.54		
				demolition									

Subtotal for Section - 02 **$124,779.67**

Section - 03

14	03 11 13 00 0003		SF	Continuous Footings Foundation Wood Formwork									$1,882.74
				Installation	Quantity 240.00	x	Unit Price 6.93	x	Factor 1.1320	=	Total 1,882.74		
				footing for new addition									
15	03 11 13 00 0003	0001		For <1,000, Add									$350.47
				Installation	Quantity 240.00	x	Unit Price 1.29	x	Factor 1.1320	=	Total 350.47		
16	03 11 13 00 0009		LF	Up To 6" High Slab Edge and Block-Out Wood Formwork									$699.89
				Installation	Quantity 116.00	x	Unit Price 5.33	x	Factor 1.1320	=	Total 699.89		
				for new addition									
17	03 11 13 00 0009	0004		For Up To 250, Add									$69.28
				Installation	Quantity 60.00	x	Unit Price 1.02	x	Factor 1.1320	=	Total 69.28		
18	03 21 11 00 0251		EA	Dowels Or Hairpin, 1/2" x 30" Length, Drilled And Epoxy In Concrete, 6" Embedment									$5,682.36
				Installation	Quantity 225.00	x	Unit Price 22.31	x	Factor 1.1320	=	Total 5,682.36		
				200 LF of trenching. Epoxy and Dowel every 2'. One on each side. For reinforcement and tying into existing slab adjacent. 25 dowels to attach from porch sidewalk to existing .									

Contractor's Price Proposal - Detail Continues..

Work Order Number: 116760.00
Work Order Title: Concord Unit 2956 Conversion

Section - 03

19	03 21 13 00 0093		LF	#6, Grade 50, Slab On Grade, Galvanized Steel Reinforcement Bar								$2,010.43
					Quantity		Unit Price		Factor		Total	
				Installation	800.00	x	2.22	x	1.1320	=	2,010.43	
				200 LF of trenching and 600 LF for slab, porch, and footings. Installation of rebar every 2'.								
20	03 30 53 00 0007		CF	Hand Mix And Place ConcreteFor use where conventional equipment access is limited or when directed by the owner.								$6,592.77
					Quantity		Unit Price		Factor		Total	
				Installation	200.00	x	29.12	x	1.1320	=	6,592.77	
				patch back trenching in existing slab								
21	03 31 13 00 0003		SF	4" 3,000 PSI Slab On Grade Concrete Slabs Assembly								$1,768.18
					Quantity		Unit Price		Factor		Total	
				Installation	200.00	x	7.81	x	1.1320	=	1,768.18	
				for new addition								
22	03 31 13 00 0003	0156		For Up To 500, Add								$681.46
					Quantity		Unit Price		Factor		Total	
				Installation	200.00	x	3.01	x	1.1320	=	681.46	
23	03 31 13 00 0023		CY	Concrete Pump, Place 3,000 PSI Concrete Spread FootingsExcludes pumping equipment.								$14,833.73
					Quantity		Unit Price		Factor		Total	
				Installation	50.00	x	262.08	x	1.1320	=	14,833.73	
				24 CY footing for new addition. 26 CY for Front porch/sloped walk								
24	03 31 13 00 0023	0040		For >20 To 50, Add								$638.45
					Quantity		Unit Price		Factor		Total	
				Installation	50.00	x	11.28	x	1.1320	=	638.45	
25	03 54 16 00 0005		SF	1/2" Thick Self Leveling Cementitious Underlayment For FloorsIncluding Surface Preparation								$9,418.78
					Quantity		Unit Price		Factor		Total	
				Installation	1,564.00	x	5.32	x	1.1320	=	9,418.78	
				self leveling of floors for prior to installation of new vinyl plank flooring								

Subtotal for Section - 03 **$44,628.54**

Section - 06

26	06 11 16 00 0061		SF	2" x 4" Wood Wall Framing At 16" On Center								$2,351.16
					Quantity		Unit Price		Factor		Total	
				Installation	950.00	x	1.58	x	1.1320	=	1,699.13	
				Demolition	800.00	x	0.72	x	1.1320	=	652.03	
				for new walls, new addition, and soffits. Couple walls require double stacked 2x4 staggered A-602								
27	06 11 16 00 0062		SF	2" x 6" Wood Wall Framing At 16" On Center								$616.94
					Quantity		Unit Price		Factor		Total	
				Installation	250.00	x	2.18	x	1.1320	=	616.94	
				2x6 wall per plans								
28	06 11 16 00 0062	0004		For >200 To 500, Add								$101.88
					Quantity		Unit Price		Factor		Total	
				Installation	250.00	x	0.36	x	1.1320	=	101.88	
29	06 11 16 00 0063		SF	2" x 8" Wood Wall Framing At 16" On Center								$263.53
					Quantity		Unit Price		Factor		Total	
				Installation	80.00	x	2.91	x	1.1320	=	263.53	
				2x8 wall per plans								

Work Order Number: 116760.00
Work Order Title: Concord Unit 2956 Conversion

Section - 06

30	06 11 16 00 0063	0003		For Up To 200, Add									$86.94
			Installation		Quantity 80.00	x	Unit Price 0.96	x	Factor 1.1320	=	Total 86.94		
31	06 11 16 00 0179		LF	2" x 4" Pressure Treated Lumber, For Roofing Nailers									$871.64
			Installation		Quantity 250.00	x	Unit Price 3.08	x	Factor 1.1320	=	Total 871.64		
			for roof framing										
32	06 11 16 00 0183		LF	2" x 4" Pressure Treated Lumber, For Roofing Sleepers									$464.12
			Installation		Quantity 250.00	x	Unit Price 1.64	x	Factor 1.1320	=	Total 464.12		
			for roof framing										
33	06 16 33 00 0006		SF	3/4" Thick CDX Plywood Roof DeckingApplied to wood rafters.									$690.52
			Installation		Quantity 250.00	x	Unit Price 2.44	x	Factor 1.1320	=	Total 690.52		
			for new addition roof										
34	06 16 33 00 0006	0040		For Tongue And Groove, Add									$19.81
			Installation		Quantity 250.00	x	Unit Price 0.07	x	Factor 1.1320	=	Total 19.81		
35	06 16 33 00 0012		SF	1/2" Interior BC Plywood Wall SheathingApplied to wall studs.									$1,036.91
			Installation		Quantity 400.00	x	Unit Price 2.29	x	Factor 1.1320	=	Total 1,036.91		
			for new addition per plans										
36	06 16 33 00 0012	0005		For Shear Wall Construction, Add									$135.84
			Installation		Quantity 400.00	x	Unit Price 0.30	x	Factor 1.1320	=	Total 135.84		
37	06 16 33 00 0012	0006		For Exterior CC Grade Plywood, Add									$54.34
			Installation		Quantity 400.00	x	Unit Price 0.12	x	Factor 1.1320	=	Total 54.34		
38	06 16 33 00 0020		SF	3/4" CD Grade Plywood Floor DeckingApplied to floor or joists.									$5,169.71
			Installation		Quantity 1,564.00	x	Unit Price 2.36	x	Factor 1.1320	=	Total 4,178.26		
			Demolition		1,564.00	x	0.56	x	1.1320	=	991.45		
			for new floor decking per plans FSI/A-602. plans require glue										
39	06 16 33 00 0020	0038		For Exterior Glue, Add									$1,593.40
			Installation		Quantity 15,640.00	x	Unit Price 0.09	x	Factor 1.1320	=	Total 1,593.40		
40	06 41 13 00 0225		EA	15" Wide, 35" High x 23-3/4" Deep, Single Drawer and Single Door, Solid Wood Face Frame, Thermofoil Door and Drawer Front, Base Cabinet									$736.43
			Installation		Quantity 2.00	x	Unit Price 325.28	x	Factor 1.1320	=	Total 736.43		
			demolition of 1 kitchen and installation of 2 new kitchen cabinets per plans										
41	06 41 13 00 0225	0126		For Solid Wood Drawers, Dovetail Joints And Full Extension Drawer Guides, Add									$231.72
			Installation		Quantity 2.00	x	Unit Price 102.35	x	Factor 1.1320	=	Total 231.72		
42	06 41 13 00 0225	0130		For All Plywood Box Construction, Add									$241.55
			Installation		Quantity 2.00	x	Unit Price 106.69	x	Factor 1.1320	=	Total 241.55		

Work Order Number: 116760.00
Work Order Title: Concord Unit 2956 Conversion

Section - 06

43	06 41 13 00 0226		EA	18" Wide, 35" High x 23-3/4" Deep, Single Drawer and Single Door, Solid Wood Face Frame, Thermofoil Door and Drawer Front, Base Cabinet									$770.08
			Installation	Quantity 2.00	x	Unit Price 340.14	x	Factor 1.1320	=	Total 770.08			
				demolition of 1 kitchen and installation of 2 new kitchen cabinets per plans									
44	06 41 13 00 0226	0126		For Solid Wood Drawers, Dovetail Joints And Full Extension Drawer Guides, Add									$231.72
			Installation	Quantity 2.00	x	Unit Price 102.35	x	Factor 1.1320	=	Total 231.72			
45	06 41 13 00 0226	0130		For All Plywood Box Construction, Add									$241.55
			Installation	Quantity 2.00	x	Unit Price 106.69	x	Factor 1.1320	=	Total 241.55			
46	06 41 13 00 0228		EA	24" Wide, 35" High x 23-3/4" Deep, Single Drawer and Single Door, Solid Wood Face Frame, Thermofoil Door and Drawer Front, Base Cabinet									$460.91
			Installation	Quantity 1.00	x	Unit Price 407.16	x	Factor 1.1320	=	Total 460.91			
				demolition of 1 kitchen and installation of 2 new kitchen cabinets per plans									
47	06 41 13 00 0228	0126		For Solid Wood Drawers, Dovetail Joints And Full Extension Drawer Guides, Add									$115.86
			Installation	Quantity 1.00	x	Unit Price 102.35	x	Factor 1.1320	=	Total 115.86			
48	06 41 13 00 0228	0130		For All Plywood Box Construction, Add									$120.77
			Installation	Quantity 1.00	x	Unit Price 106.69	x	Factor 1.1320	=	Total 120.77			
49	06 41 13 00 0231		EA	33" Wide, 35" High x 23-3/4" Deep, Single Drawer and Double Door, Solid Wood Face Frame, Thermofoil Door and Drawer Front, Base Cabinet									$1,098.81
			Installation	Quantity 2.00	x	Unit Price 485.34	x	Factor 1.1320	=	Total 1,098.81			
				demolition of 1 kitchen and installation of 2 new kitchen cabinets per plans									
50	06 41 13 00 0231	0126		For Solid Wood Drawers, Dovetail Joints And Full Extension Drawer Guides, Add									$231.72
			Installation	Quantity 2.00	x	Unit Price 102.35	x	Factor 1.1320	=	Total 231.72			
51	06 41 13 00 0231	0130		For All Plywood Box Construction, Add									$241.55
			Installation	Quantity 2.00	x	Unit Price 106.69	x	Factor 1.1320	=	Total 241.55			
52	06 41 13 00 0232		EA	36" Wide, 35" High x 23-3/4" Deep, Single Drawer and Double Door, Solid Wood Face Frame, Thermofoil Door and Drawer Front, Base Cabinet									$1,133.00
			Installation	Quantity 2.00	x	Unit Price 500.44	x	Factor 1.1320	=	Total 1,133.00			
				demolition of 1 kitchen and installation of 2 new kitchen cabinets per plans									
53	06 41 13 00 0232	0126		For Solid Wood Drawers, Dovetail Joints And Full Extension Drawer Guides, Add									$231.72
			Installation	Quantity 2.00	x	Unit Price 102.35	x	Factor 1.1320	=	Total 231.72			
54	06 41 13 00 0232	0130		For All Plywood Box Construction, Add									$241.55
			Installation	Quantity 2.00	x	Unit Price 106.69	x	Factor 1.1320	=	Total 241.55			
55	06 41 13 00 0248		EA	15" Wide, 35" High x 23-3/4" Deep, Four Drawer Base, Solid Wood Face Frame and Thermofoil Drawer Fronts, Base Cabinet									$881.74
			Installation	Quantity 2.00	x	Unit Price 389.46	x	Factor 1.1320	=	Total 881.74			
				demolition of 1 kitchen and installation of 2 new kitchen cabinets per plans									

Work Order Number: 116760.00
Work Order Title: Concord Unit 2956 Conversion

Section - 06

56	06 41 13 00 0248	0129		For Solid Wood Drawers, Dovetail Joints And Full Extension Drawer Guides, Add									$926.86
			Installation	Quantity		Unit Price		Factor		Total			
				2.00	x	409.39	x	1.1320	=	926.86			
57	06 41 13 00 0248	0130		For All Plywood Box Construction, Add									$241.55
			Installation	Quantity		Unit Price		Factor		Total			
				2.00	x	106.69	x	1.1320	=	241.55			
58	06 41 13 00 0258		EA	33" Wide, 12" High x 12" Deep, Double Door, Solid Wood Face Frame and Thermofoil Doors, Wall Cabinet									$331.44
			Installation	Quantity		Unit Price		Factor		Total			
				1.00	x	292.79	x	1.1320	=	331.44			
				demolition of 1 kitchen and installation of 2 new kitchen cabinets per plans									
59	06 41 13 00 0258	0131		For All Plywood Box Construction, Add									$64.81
			Installation	Quantity		Unit Price		Factor		Total			
				1.00	x	57.25	x	1.1320	=	64.81			
60	06 41 13 00 0259		EA	36" Wide, 12" High x 12" Deep, Double Door, Solid Wood Face Frame and Thermofoil Doors, Wall Cabinet									$365.34
			Installation	Quantity		Unit Price		Factor		Total			
				1.00	x	322.74	x	1.1320	=	365.34			
				demolition of 1 kitchen and installation of 2 new kitchen cabinets per plans									
61	06 41 13 00 0259	0131		For All Plywood Box Construction, Add									$64.81
			Installation	Quantity		Unit Price		Factor		Total			
				1.00	x	57.25	x	1.1320	=	64.81			
62	06 41 13 00 0278		EA	30" Wide, 18" High x 12" Deep, Double Doors, Solid Wood Face Frame and Thermofoil Doors, Wall Cabinet									$722.69
			Installation	Quantity		Unit Price		Factor		Total			
				2.00	x	319.21	x	1.1320	=	722.69			
				demolition of 1 kitchen and installation of 2 new kitchen cabinets per plans									
63	06 41 13 00 0278	0131		For All Plywood Box Construction, Add									$129.61
			Installation	Quantity		Unit Price		Factor		Total			
				2.00	x	57.25	x	1.1320	=	129.61			
64	06 41 13 00 0282		EA	12" Wide, 30" High x 12" Deep, Single Door, Solid Wood Face Frame and Thermofoil Door, Wall Cabinet									$597.90
			Installation	Quantity		Unit Price		Factor		Total			
				2.00	x	264.09	x	1.1320	=	597.90			
				demolition of 1 kitchen and installation of 2 new kitchen cabinets per plans									
65	06 41 13 00 0282	0131		For All Plywood Box Construction, Add									$129.61
			Installation	Quantity		Unit Price		Factor		Total			
				2.00	x	57.25	x	1.1320	=	129.61			
66	06 41 13 00 0283		EA	15" Wide, 30" High x 12" Deep, Single Door, Solid Wood Face Frame and Thermofoil Door, Wall Cabinet									$325.62
			Installation	Quantity		Unit Price		Factor		Total			
				1.00	x	287.65	x	1.1320	=	325.62			
				demolition of 1 kitchen and installation of 2 new kitchen cabinets per plans									
67	06 41 13 00 0283	0131		For All Plywood Box Construction, Add									$64.81
			Installation	Quantity		Unit Price		Factor		Total			
				1.00	x	57.25	x	1.1320	=	64.81			
68	06 41 13 00 0283		EA	15" Wide, 30" High x 12" Deep, Single Door, Solid Wood Face Frame and Thermofoil Door, Wall Cabinet									$325.62
			Installation	Quantity		Unit Price		Factor		Total			
				1.00	x	287.65	x	1.1320	=	325.62			
				demolition of 1 kitchen and installation of 2 new kitchen cabinets per plans									

Contractor's Price Proposal - Detail Continues..

Work Order Number: 116760.00
Work Order Title: Concord Unit 2956 Conversion

Section - 06

69	06 41 13 00 0283	0131		For All Plywood Box Construction, Add								$64.81
			Installation	Quantity 1.00	x	Unit Price 57.25	x	Factor 1.1320	=	Total 64.81		
70	06 41 13 00 0284		EA	18" Wide, 30" High x 12" Deep, Single Door, Solid Wood Face Frame and Thermofoil Door, Wall Cabinet								$694.28
			Installation	Quantity 2.00	x	Unit Price 306.66	x	Factor 1.1320	=	Total 694.28		
				demolition of 1 kitchen and installation of 2 new kitchen cabinets per plans								
71	06 41 13 00 0284	0131		For All Plywood Box Construction, Add								$129.61
			Installation	Quantity 2.00	x	Unit Price 57.25	x	Factor 1.1320	=	Total 129.61		
72	06 41 13 00 0289		EA	33" Wide, 30" High x 12" Deep, Double Doors, Solid Wood Face Frame and Thermofoil Doors, Wall Cabinet								$974.72
			Installation	Quantity 2.00	x	Unit Price 430.53	x	Factor 1.1320	=	Total 974.72		
				demolition of 1 kitchen and installation of 2 new kitchen cabinets per plans								
73	06 41 13 00 0289	0131		For All Plywood Box Construction, Add								$129.61
			Installation	Quantity 2.00	x	Unit Price 57.25	x	Factor 1.1320	=	Total 129.61		
74	06 41 13 00 0329		EA	36" Wide, 84" High x 24" Deep, Four Doors, Solid Wood Face Frame and Thermofoil Doors, Pantry Cabinet								$1,462.41
			Installation	Quantity 1.00	x	Unit Price 1,291.88	x	Factor 1.1320	=	Total 1,462.41		
				demolition of 1 kitchen and installation of 2 new kitchen cabinets per plans								
75	06 41 13 00 0329	0132		For All Plywood Box Construction, Add								$239.58
			Installation	Quantity 1.00	x	Unit Price 211.64	x	Factor 1.1320	=	Total 239.58		
76	06 41 93 00 0007		EA	7" To 8-1/2", Flat Cabinet Pull Handle								$2,154.15
			Installation	Quantity 54.00	x	Unit Price 35.24	x	Factor 1.1320	=	Total 2,154.15		
				demolition of 1 kitchen and installation of 2 new kitchen cabinets per plans								

Subtotal for Section - 06 **$30,807.26**

Section - 07

77	07 21 16 00 0006		SF	5-1/2" Thick, Kraft Faced, R-21 Fiberglass Flexible Insulation								$19,505.18
			Installation	Quantity 8,284.00	x	Unit Price 1.72	x	Factor 1.1320	=	Total 16,129.28		
			Demolition	8,284.00	x	0.36	x	1.1320	=	3,375.90		
				removal of existing insulation and installation of new 6684 sqft of walls 1564 sqft of ceilings								
78	07 26 13 00 0010		CSF	Building Wrap (Tyvek)								$5,304.13
			Installation	Quantity 87.50	x	Unit Price 53.55	x	Factor 1.1320	=	Total 5,304.13		
				for new addition								
79	07 31 13 13 0004		SQ	230 LB/SQ, 5" Exposure, Three Tab Fiberglass Reinforced, Asphalt Composition Shingle (CertainTeed XT 30)								$7,409.79
			Installation	Quantity 25.00	x	Unit Price 261.83	x	Factor 1.1320	=	Total 7,409.79		
				new shingle roof for addition								

Contractor's Price Proposal - Detail Continues..

Work Order Number: 116760.00
Work Order Title: Concord Unit 2956 Conversion

Section - 07

80	07 34 00 00 0003		SQ	30 LB, Asphalt Saturated Organic Felt Roofing Underlayment, Mechanically Fastened								$1,416.70
			Installation		Quantity 25.00	x	Unit Price 50.06	x	Factor 1.1320	=	Total 1,416.70	
			new shingle roof for addition									
81	07 41 13 00 0026		LF	Eave Flashing For Aluminum Exposed Fastener Metal Roofing								$784.25
			Installation		Quantity 40.00	x	Unit Price 17.32	x	Factor 1.1320	=	Total 784.25	
			for new addition									
82	07 41 13 00 0026	0130		For Fluoropolymer (Kynar®) Coating, Add								$42.11
			Installation		Quantity 40.00	x	Unit Price 0.93	x	Factor 1.1320	=	Total 42.11	
83	07 62 13 00 0033		SF	22 Gauge, 0.034" Thick, Galvanized Steel Flashing								$4,149.91
			Installation		Quantity 300.00	x	Unit Price 12.22	x	Factor 1.1320	=	Total 4,149.91	
			flashing per plans for addition and 100 sqft for new windows									
84	07 62 13 00 0033	0080		For Wrap Around Window Panning, Add								$699.58
			Installation		Quantity 100.00	x	Unit Price 6.18	x	Factor 1.1320	=	Total 699.58	
85	07 71 23 00 0016		LF	6", 0.032" Thick, Box Style Aluminum Gutter								$429.88
			Installation		Quantity 25.00	x	Unit Price 15.19	x	Factor 1.1320	=	Total 429.88	
			rain gutter per plans									
86	07 71 23 00 0016	0322		For Up To 100', Add								$70.18
			Installation		Quantity 25.00	x	Unit Price 2.48	x	Factor 1.1320	=	Total 70.18	
87	07 71 23 00 0029		EA	6", Box Style Aluminum Gutter End Cap								$18.34
			Installation		Quantity 2.00	x	Unit Price 8.10	x	Factor 1.1320	=	Total 18.34	
			rain gutter per plans									
88	07 71 23 00 0055		LF	4" x 5", 0.019" Thick, Rectangular Aluminum Downspout								$102.67
			Installation		Quantity 10.00	x	Unit Price 9.07	x	Factor 1.1320	=	Total 102.67	
			rain gutter per plans									
89	07 71 23 00 0055	0325		For Up To 100', Add								$14.04
			Installation		Quantity 10.00	x	Unit Price 1.24	x	Factor 1.1320	=	Total 14.04	

Subtotal for Section - 07 **$39,946.76**

Section - 08

90	08 05 13 00 0041		EA	Factory Prepare Wood Door (Rated Or Non-Rated) For Mortise Lockset Hardware								$470.41
			Installation		Quantity 6.00	x	Unit Price 69.26	x	Factor 1.1320	=	Total 470.41	
			for all new doors. 1 front door, 2 bath, and 3 bedroom									

Work Order Number: 116760.00
Work Order Title: Concord Unit 2956 Conversion

Section - 08

91	08 14 16 00 0134	EA	3'-0" x 6'-8" x 1-3/4" Thick, 5 Ply, Hollow Core (HC), Birch Faced Wood Door									$2,910.85
				Quantity		Unit Price		Factor		Total		
			Installation	7.00	x	288.16	x	1.1320	=	2,283.38		
			Demolition	10.00	x	55.43	x	1.1320	=	627.47		
			Demo of 3 utility closet, 5 bedroom, and 2 bathroom doors. Installation of 2 utility closet, 3 bedroom, 2 bathroom doors.									
92	08 14 73 00 0074	EA	5' Wide, Two 2'-6" x 6'-8" x 1-3/8" Thick, Flush, Hollow Core (HC), Birch Faced Wood Bi-Pass Doors									$1,525.71
				Quantity		Unit Price		Factor		Total		
			Installation	3.00	x	396.94	x	1.1320	=	1,348.01		
			Demolition	2.00	x	78.49	x	1.1320	=	177.70		
			removal of 2 existing closet sliding doors, installation of 3 new closet sliding doors									
93	08 53 13 00 0549	EA	>110" To 120" UI, Horizontal Sliding Premium Vinyl Window (Pella 350)									$4,060.21
				Quantity		Unit Price		Factor		Total		
			Installation	5.00	x	631.42	x	1.1320	=	3,573.84		
			Demolition	6.00	x	71.61	x	1.1320	=	486.38		
			removal of 6 existing windows. Installation of 5 new windows per plans									
94	08 71 11 00 0004	PR	3-1/2" x 3-1/2" Standard Duty, Full Mortise, Plain Bearing, Brass/Bronze, Satin Chrome Finish Hinge									$652.61
				Quantity		Unit Price		Factor		Total		
			Installation	7.00	x	73.13	x	1.1320	=	579.48		
			Demolition	10.00	x	6.46	x	1.1320	=	73.13		
			Demo of 3 utility closet, 5 bedroom, and 2 bathroom doors. Installation of 2 utility closet, 3 bedroom, 2 bathroom doors.									
95	08 71 11 00 0005	PR	4" x 4" Standard Duty, Full Mortise, Plain Bearing, Brass/Bronze, Satin Chrome Finish Hinge									$136.35
				Quantity		Unit Price		Factor		Total		
			Installation	1.50	x	80.30	x	1.1320	=	136.35		
			for new front door per plans									
96	08 71 11 00 0513	EA	3" Projection, Residential Spring Type, Bright Brass Finish, Steel Wall Stop (Ives 63)									$130.43
				Quantity		Unit Price		Factor		Total		
			Installation	7.00	x	9.86	x	1.1320	=	78.13		
			Demolition	10.00	x	4.62	x	1.1320	=	52.30		
			per plans									
97	08 71 11 00 0655	EA	190 Degree Angle Of View, Bright Brass Finish, Brass One-Way Wide Angle Door Viewer (Ives U698)									$47.59
				Quantity		Unit Price		Factor		Total		
			Installation	1.00	x	42.04	x	1.1320	=	47.59		
			for new front door per plans									
98	08 71 11 00 2288	EA	Passage/Closet F01 Mortise LatchsetBoth sides always unlocked.									$1,471.62
				Quantity		Unit Price		Factor		Total		
			Installation	2.00	x	615.36	x	1.1320	=	1,393.18		
			Demolition	3.00	x	23.10	x	1.1320	=	78.45		
			Demo of 3 utility closet. Installation of 2 utility closet doors									
99	08 71 11 00 2289	EA	Bath/Bedroom Privacy F02/F19 Mortise LocksetLocked with thumb knob inside.									$4,323.67
				Quantity		Unit Price		Factor		Total		
			Installation	5.00	x	731.56	x	1.1320	=	4,140.63		
			Demolition	7.00	x	23.10	x	1.1320	=	183.04		
			Demo of 5 bedroom, and 2 bathroom doors. Installation of 3 bedroom, 2 bathroom doors.									

Contractor's Price Proposal - Detail Continues..

Work Order Number: 116760.00
Work Order Title: Concord Unit 2956 Conversion

Section - 08

100	08 71 11 00 2293		EA	Entrance F08 Mortise LocksetLocked with key outside and thumb knob inside.								$960.13
					Quantity		Unit Price		Factor		Total	
				Installation	1.00	x	848.17	x	1.1320	=	960.13	
				for new front door per plans								
101	08 71 11 00 2293	0263		For Satin Brass Clear Coat US4 (BHMA 606) Finish, Add								$42.78
					Quantity		Unit Price		Factor		Total	
				Installation	1.00	x	37.79	x	1.1320	=	42.78	
102	08 72 33 00 0155		LF	3/8" x 3/16", Silicon Compression Bulb, Adhesive Backed Perimeter Gasketing Weather-Strip (Pemko PK33)								$63.89
					Quantity		Unit Price		Factor		Total	
				Installation	17.00	x	3.32	x	1.1320	=	63.89	
				for new front door per plans								
103	08 72 43 00 0011		LF	6" Width, 1/4" Height, Aluminum Saddle Threshold (Pemko 272A)								$125.07
					Quantity		Unit Price		Factor		Total	
				Installation	3.00	x	36.83	x	1.1320	=	125.07	
				for new front door per plans								
104	08 72 43 00 0011	0458		For Color Anodized Finish, Add								$16.33
					Quantity		Unit Price		Factor		Total	
				Installation	3.00	x	4.81	x	1.1320	=	16.33	

Subtotal for Section - 08 **$16,937.65**

Section - 09

105	09 05 71 00 0002		SF	5 Mil Tile And Stone Acoustical Underlayment (EasyMat)								$6,391.32
					Quantity		Unit Price		Factor		Total	
				Installation	1,564.00	x	3.61	x	1.1320	=	6,391.32	
				acousthmat underlayment per plans FSI/A-602								
106	09 05 71 00 0005		SF	2 MM Thick Resilient Plank Floor Acoustical Underlayment (Floormuffler)								$2,637.97
					Quantity		Unit Price		Factor		Total	
				Installation	1,564.00	x	1.49	x	1.1320	=	2,637.97	
				closest LI to gypsum sanded floor underlayment per plans FSI/A-602								
107	09 22 13 23 0008		SF	25 Gauge, 16" On Center, Installed On Walls, Double-Leg Resilient Channel, RC2 Furring Channel								$2,604.73
					Quantity		Unit Price		Factor		Total	
				Installation	650.00	x	3.54	x	1.1320	=	2,604.73	
				Resilient channel per plans A-602								
108	09 22 13 23 0010		SF	25 Gauge, 16" On Center, Installed On Ceilings, Double-Leg Resilient Channel, RC2 Furring Channel								$7,418.18
					Quantity		Unit Price		Factor		Total	
				Installation	1,564.00	x	4.19	x	1.1320	=	7,418.18	
				Resilient channel per plans FSI/A-602								
109	09 22 36 23 0005		SF	3.4 LB/SY, Installed On Studs Or Furred Walls, Flat Diamond, Expanded Metal Lath								$3,022.16
					Quantity		Unit Price		Factor		Total	
				Installation	875.00	x	2.53	x	1.1320	=	2,505.97	
				Demolition	800.00	x	0.57	x	1.1320	=	516.19	
				removal of existing stucco and installation of new for new addition and new front entrance								

Work Order Number: 116760.00
Work Order Title: Concord Unit 2956 Conversion

Section - 09

110	09 24 23 00 0002		SF	Scratch/Brown/Finish, Three Coat Troweled StuccoExcludes lath and felt. Interior or exterior, one side.								$10,885.03
					Quantity		Unit Price		Factor		Total	
				Installation	875.00	x	8.53	x	1.1320	=	8,448.97	
				Demolition	800.00	x	2.69	x	1.1320	=	2,436.06	
				removal of existing stucco and installation of new for new addition and new front entrance								
111	09 24 23 00 0004		SF	Scratch/Finish, Two Coat Troweled StuccoExcludes lath and felt. Interior or exterior, one side.								$6,763.70
					Quantity		Unit Price		Factor		Total	
				Installation	875.00	x	5.64	x	1.1320	=	5,586.42	
				Demolition	800.00	x	1.30	x	1.1320	=	1,177.28	
				removal of existing stucco and installation of new for new addition and new front entrance								
112	09 24 23 00 0005		SF	Finish Coat Troweled StuccoExcludes lath and felt. Interior or exterior, one side.								$4,373.48
					Quantity		Unit Price		Factor		Total	
				Installation	875.00	x	3.62	x	1.1320	=	3,585.61	
				Demolition	800.00	x	0.87	x	1.1320	=	787.87	
				removal of existing stucco and installation of new for new addition and new front entrance								
113	09 29 10 00 0006		SF	5/8" Gypsum Board								$14,191.84
					Quantity		Unit Price		Factor		Total	
				Installation	8,248.00	x	1.52	x	1.1320	=	14,191.84	
				for walls and ceilings per plans								
114	09 29 10 00 0038		SF	Up To 10' High, Walls, Tape, Spackle And Finish Gypsum Board								$4,464.11
					Quantity		Unit Price		Factor		Total	
				Installation	6,684.00	x	0.59	x	1.1320	=	4,464.11	
				for walls								
115	09 29 10 00 0038	0048		For ASTM C840 Level 5 High Quality Finish, Add								$3,329.17
					Quantity		Unit Price		Factor		Total	
				Installation	6,684.00	x	0.44	x	1.1320	=	3,329.17	
116	09 29 10 00 0041		SF	Up To 10' High, Ceilings, Tape, Spackle And Finish Gypsum Board								$1,363.25
					Quantity		Unit Price		Factor		Total	
				Installation	1,564.00	x	0.77	x	1.1320	=	1,363.24	
				for ceilings								
117	09 29 10 00 0041	0048		For ASTM C840 Level 5 High Quality Finish, Add								$10,091.55
					Quantity		Unit Price		Factor		Total	
				Installation	15,640.00	x	0.57	x	1.1320	=	10,091.55	
118	09 29 10 00 0044		LF	Up To 10' High, Vertical Corners, Tape, Spackle And Finish Gypsum Board								$1,651.00
					Quantity		Unit Price		Factor		Total	
				Installation	1,236.00	x	1.18	x	1.1320	=	1,651.00	
				walls: 150 vertical corners @ 8' throughout both floors. windows: 36 LF of vertical corners								
119	09 29 10 00 0044	0048		For ASTM C840 Level 5 High Quality Finish, Add								$1,217.26
					Quantity		Unit Price		Factor		Total	
				Installation	1,236.00	x	0.87	x	1.1320	=	1,217.26	
120	09 29 10 00 0047		LF	Up To 10' High, Horizontal Corners, Tape, Spackle And Finish Gypsum Board								$1,209.66
					Quantity		Unit Price		Factor		Total	
				Installation	780.00	x	1.37	x	1.1320	=	1,209.66	
				750 LF of walls and 30 LF of windows								

Work Order Number: 116760.00
Work Order Title: Concord Unit 2956 Conversion

Section - 09

121	09 29 10 00 0047	0048		For ASTM C840 Level 5 High Quality Finish, Add								$891.79
			Installation	Quantity 780.00	x	Unit Price 1.01	x	Factor 1.1320	=	Total 891.79		
122	09 29 10 00 0051		LF	Corner Bead, Galvanized Steel For Gypsum Board								$7,508.15
			Installation	Quantity 2,016.00	x	Unit Price 3.29	x	Factor 1.1320	=	Total 7,508.15		
			walls: 150 vertical corners @ 8' throughout both floors. 750 LF of horizontal corners Windows: 86 LF									
123	09 65 13 13 0003		LF	4" High, 1/8" Thick, Type TV Thermoplastic Vinyl Wall Base, All Colors								$2,844.15
			Installation	Quantity 750.00	x	Unit Price 3.35	x	Factor 1.1320	=	Total 2,844.15		
			750 LF of walls									
124	09 65 23 00 0004		SF	0.16" Overall Thickness, 0.020" Wear Layer, Vinyl Plank Flooring (Armstrong® Luxe Plank™)								$16,907.78
			Installation	Quantity 1,564.00	x	Unit Price 9.55	x	Factor 1.1320	=	Total 16,907.78		
			new flooring throughout per plans									
125	09 91 13 00 0095		SF	1 Coat Primer, Brush/Roller Work, Paint Exterior Stucco Walls								$1,236.14
			Installation	Quantity 1,400.00	x	Unit Price 0.78	x	Factor 1.1320	=	Total 1,236.14		
			paint front and side of building for affected areas corner to corner									
126	09 91 13 00 0097		SF	2 Coats Paint, Brush/Roller Work, Paint Exterior Stucco Walls								$2,599.07
			Installation	Quantity 1,400.00	x	Unit Price 1.64	x	Factor 1.1320	=	Total 2,599.07		
			paint front and side of building for affected areas corner to corner									
127	09 91 23 00 0067		SF	1 Coat Primer, Brush/Roller Work, Paint Interior Plaster/Drywall Walls								$4,161.46
			Installation	Quantity 6,684.00	x	Unit Price 0.55	x	Factor 1.1320	=	Total 4,161.46		
			for walls									
128	09 91 23 00 0069		SF	2 Coats Paint, Brush/Roller Work, Paint Interior Plaster/Drywall Walls								$8,322.92
			Installation	Quantity 6,684.00	x	Unit Price 1.10	x	Factor 1.1320	=	Total 8,322.92		
			for walls									
129	09 91 23 00 0161		SF	1 Coat Primer, Brush/Roller Work, Paint Interior Drywall/Plaster Ceiling								$1,150.79
			Installation	Quantity 1,564.00	x	Unit Price 0.65	x	Factor 1.1320	=	Total 1,150.79		
			for ceilings									
130	09 91 23 00 0163		SF	2 Coats Paints, Brush/Roller Work, Paint Interior Drywall/Plaster Ceiling								$2,071.42
			Installation	Quantity 1,564.00	x	Unit Price 1.17	x	Factor 1.1320	=	Total 2,071.42		
			for ceilings									
131	09 91 23 00 0252		LF	1 Coat Primer, Brush/Roller Work, Paint Interior Wood Door Frame And Trim								$570.53
			Installation	Quantity 600.00	x	Unit Price 0.84	x	Factor 1.1320	=	Total 570.53		
			15 total doors. 40 LF of trim per door									
132	09 91 23 00 0254		LF	2 Coats Paint, Brush/Roller Work, Paint Interior Wood Door Frame And Trime								$1,249.73
			Installation	Quantity 600.00	x	Unit Price 1.84	x	Factor 1.1320	=	Total 1,249.73		
			15 total doors. 40 LF of trim per door									

Work Order Number: 116760.00
Work Order Title: Concord Unit 2956 Conversion

Section - 09

133	09 91 23 00 0275	EA	1 Coat Primer, Brush/Roller Work, Both Faces, Paint Interior Wood Door								$1,153.96
				Quantity		Unit Price		Factor		Total	
			Installation	15.00	x	67.96	x	1.1320	=	1,153.96	
			8 doors on first floor 7 doors on second floor								
134	09 91 23 00 0277	EA	2 Coats Paint, Brush/Roller Work, Both Faces, Paint Interior Wood Door								$2,072.58
				Quantity		Unit Price		Factor		Total	
			Installation	15.00	x	122.06	x	1.1320	=	2,072.58	
			8 doors on first floor 7 doors on second floor								
135	09 91 23 00 0307	LF	1 Coat Primer, Brush/Roller Work, Paint Interior Wood Window Frame And Trim								$163.73
				Quantity		Unit Price		Factor		Total	
			Installation	128.00	x	1.13	x	1.1320	=	163.73	
			8 windows with 128 LF of trim								
136	09 91 23 00 0309	LF	2 Coats Paint, Brush/Roller Work, Paint Interior Wood Window Frame And Trim								$357.89
				Quantity		Unit Price		Factor		Total	
			Installation	128.00	x	2.47	x	1.1320	=	357.89	
			8 windows with 128 LF of trim								
137	09 91 23 00 0350	LF	1 Coat Primer, Brush Work, Paint Interior Wood Trim To 6" Wide								$492.42
				Quantity		Unit Price		Factor		Total	
			Installation	750.00	x	0.58	x	1.1320	=	492.42	
			750 LF of baseboards								
138	09 91 23 00 0352	LF	2 Coats Paint, Paint Interior Wood Trim to 6" Wide								$1,120.68
				Quantity		Unit Price		Factor		Total	
			Installation	750.00	x	1.32	x	1.1320	=	1,120.68	
			750 LF of baseboards								

Subtotal for Section - 09 **$136,489.60**

Section - 10

139	10 28 13 13 0045	EA	Single Roll, Surface Mounted, Stainless Steel, Satin Finish, Toilet Tissue Dispenser (Bobrick B-6857)								$123.83
				Quantity		Unit Price		Factor		Total	
			Installation	1.00	x	88.61	x	1.1320	=	100.31	
			Demolition	1.00	x	20.78	x	1.1320	=	23.52	
			per plans								
140	10 28 13 13 0170	EA	36" Length, 1-1/2" Diameter, Stainless Steel Grab Bar (Bobrick B-6806x36)								$311.68
				Quantity		Unit Price		Factor		Total	
			Installation	3.00	x	91.78	x	1.1320	=	311.68	
			per plans								
141	10 28 13 13 0171	EA	42" Length, 1-1/2" Diameter, Stainless Steel Grab Bar (Bobrick B-6806x42)								$106.14
				Quantity		Unit Price		Factor		Total	
			Installation	1.00	x	93.76	x	1.1320	=	106.14	
			per plans								
142	10 28 13 13 0217	EA	Telescoping 60" To 72" Length, 20-Gauge, 1" Diameter, Stainless Steel Curved Shower Rod With Concealed Mounting (Kohler Expanse K-9349)								$158.19
				Quantity		Unit Price		Factor		Total	
			Installation	1.00	x	118.96	x	1.1320	=	134.66	
			Demolition	1.00	x	20.78	x	1.1320	=	23.52	
			per plans								

Contractor's Price Proposal - Detail Continues..

Work Order Number: 116760.00
Work Order Title: Concord Unit 2956 Conversion

Section - 10

143	10 28 13 13 0322	EA	24" Length, 3/4" Diameter, Stainless Steel Towel Bar (Bobrick B-674)									$133.36
				Quantity		Unit Price		Factor		Total		
			Installation	1.00	x	97.03	x	1.1320	=	109.84		
			Demolition	1.00	x	20.78	x	1.1320	=	23.52		
			per plans									
144	10 28 13 13 0390	EA	20" x 26", Surface Mounted, Aluminum Medicine Cabinet (Kohler K-CB)									$817.76
				Quantity		Unit Price		Factor		Total		
			Installation	1.00	x	676.23	x	1.1320	=	765.49		
			Demolition	1.00	x	46.17	x	1.1320	=	52.26		
			per plans									

Subtotal for Section - 10 **$1,650.96**

Section - 11

145	11 30 13 13 0010	EA	30" Gas Range With Oven									$2,325.17
				Quantity		Unit Price		Factor		Total		
			Installation	2.00	x	985.73	x	1.1320	=	2,231.69		
			Demolition	1.00	x	82.58	x	1.1320	=	93.48		
			remove and save existing for clients attic stock. Installation of 2 new.									
146	11 30 13 13 0015	EA	30" Venting Range Hood (Broan 40000)									$619.32
				Quantity		Unit Price		Factor		Total		
			Installation	2.00	x	242.58	x	1.1320	=	549.20		
			Demolition	1.00	x	61.94	x	1.1320	=	70.12		
			removal of existing and installation of 2 new									
147	11 30 13 13 0048	EA	>16 To 18 CF Top Freezer Refrigerator									$2,550.65
				Quantity		Unit Price		Factor		Total		
			Installation	2.00	x	1,105.96	x	1.1320	=	2,503.89		
			Demolition	1.00	x	41.30	x	1.1320	=	46.75		
			remove and save existing for clients attic stock. Installation of 2 new.									
148	11 30 13 13 0084	EA	1/3 HP Insulated Garbage Disposal (GE GFC320V)									$636.07
				Quantity		Unit Price		Factor		Total		
			Installation	2.00	x	249.98	x	1.1320	=	565.95		
			Demolition	1.00	x	61.94	x	1.1320	=	70.12		
			removal o existing and installation of new									

Subtotal for Section - 11 **$6,131.21**

Section - 12

149	12 36 61 19 0005	SF	1-1/4" Thick, Quartz Agglomerate Countertop With Backsplash									$6,914.26
				Quantity		Unit Price		Factor		Total		
			Installation	50.00	x	122.16	x	1.1320	=	6,914.26		
			25 LF of kitchen countertops									
150	12 36 61 19 0007	EA	Cutout For Sink And/Or Faucet In Quartz Agglomerate Countertop									$313.61
				Quantity		Unit Price		Factor		Total		
			Installation	2.00	x	138.52	x	1.1320	=	313.61		
			2 kitchen sinks									

Subtotal for Section - 12 **$7,227.87**

Section - 22

Work Order Number: 116760.00
Work Order Title: Concord Unit 2956 Conversion

Section - 22

151	22 01 40 81 0004	EA	Removal And Replacement Of Chrome Supply Lines To Sink/Lavatory, Pair								$297.60
				Quantity		Unit Price		Factor		Total	
			Installation	10.00	x	26.29	x	1.1320	=	297.60	
			replace supply lines in kitchens and bathrooms								
152	22 01 40 81 0006	EA	Removal And Replacement Of Double Bowl Sink/Lavatory Drain Line								$128.73
				Quantity		Unit Price		Factor		Total	
			Installation	2.00	x	56.86	x	1.1320	=	128.73	
			new drain lines								
153	22 11 16 00 0003	LF	3/4" Schedule 40 Threaded Galvanized Steel Pipe With 150 LB Malleable Iron Fitting AssemblyIncludes all hangers and all galvanized malleable iron fittings (couplings, elbows, tees and reducer fittings). All hangers are complete assemblies. Not for use where detail is available.								$7,127.07
				Quantity		Unit Price		Factor		Total	
			Installation	300.00	x	18.30	x	1.1320	=	6,214.68	
			Demolition	200.00	x	4.03	x	1.1320	=	912.39	
			gas line piping								
154	22 11 16 00 0901	LF	3/4" Inside Diameter Copper Pipe/Tubing Type L AssemblyIncludes all hangers and couplings, elbow, tee, reducer fittings. All hangers are complete assemblies. Not for use where detail is available.								$19,234.38
				Quantity		Unit Price		Factor		Total	
			Installation	650.00	x	24.17	x	1.1320	=	17,784.29	
			Demolition	350.00	x	3.66	x	1.1320	=	1,450.09	
			water line copper piping								
155	22 12 23 13 0002	EA	80 Gallon ASME Rated Tank, 150PSI, Jacketed, Insulated, Glass Lined Water Heater Storage Tank (TJ-80A)								$424.28
				Quantity		Unit Price		Factor		Total	
			Installation	0.00	x	2,141.02	x	1.1320	=	0.00	
			Demolition	1.00	x	374.81	x	1.1320	=	424.28	
			removal of existing water heater								
156	22 13 16 00 0509	LF	4" Schedule 40 Polyvinyl Chloride (PVC) DWV Pipe AssemblyIncludes all fittings, couplings and hangers. Fittings are assumed every 10'. Not for use where detail is available.								$20,147.62
				Quantity		Unit Price		Factor		Total	
			Installation	400.00	x	39.47	x	1.1320	=	17,872.02	
			Demolition	275.00	x	7.31	x	1.1320	=	2,275.60	
			Sewer and vent piping								
157	22 34 13 00 0011	EA	7.4 GPM, Outdoor Mount, Instantaneous, Tankless, Gas Domestic Water Heater (Rheem RTG-74XN)								$5,196.24
				Quantity		Unit Price		Factor		Total	
			Installation	2.00	x	2,295.16	x	1.1320	=	5,196.24	
			installation of 2 new water heaters								
158	22 41 16 16 0003	EA	33" x 21" x 6-1/2" Stainless Steel Kitchen Sink, Double Bowl, 20 Gauge (Elkay D233213)								$1,488.27
				Quantity		Unit Price		Factor		Total	
			Installation	2.00	x	607.23	x	1.1320	=	1,374.77	
			Demolition	1.00	x	100.27	x	1.1320	=	113.51	
			removal of existing and installation of new.								
159	22 41 39 00 0006	EA	Chrome Two Handle Kitchen Faucet With Spray, Three Hole Installation, 8" Center (Delta 2402LF-LHP+H215)								$454.33
				Quantity		Unit Price		Factor		Total	
			Installation	2.00	x	177.25	x	1.1320	=	401.29	
			Demolition	1.00	x	46.85	x	1.1320	=	53.03	
			removal of existing and installation of new.								

Work Order Number: 116760.00
Work Order Title: Concord Unit 2956 Conversion

Section - 22

160	22 42 13 13 0027	EA	2 Piece Tank Type, Pressure Assisted, Siphon Jet, Floor Mounted, Back Outlet, Handicap Accessible, Elongated Vitreous China Water Closet (American Standard Yorkville™ ADA)								$1,300.36
				Quantity		Unit Price		Factor		Total	
			Installation	1.00	x	1,051.28	x	1.1320	=	1,190.05	
			Demolition	1.00	x	97.45	x	1.1320	=	110.31	
			remove existing and install new ADA toilet								
161	22 42 16 13 0009	EA	27" x 20" Wheelchair Accessible, Vitreous China Wall Hung Lavatory (American Standard Wheel Chair Users)								$776.98
				Quantity		Unit Price		Factor		Total	
			Installation	1.00	x	623.60	x	1.1320	=	705.92	
			Demolition	1.00	x	62.78	x	1.1320	=	71.07	
			remove existing and install new ADA sink, faucet, and drain cover.								
162	22 42 19 00 0027	EA	3 Piece Tub/Shower Surrounds, 32" x 72" Side Walls, 48" x 72" Back, (Swanstone SK-324872)								$3,166.32
				Quantity		Unit Price		Factor		Total	
			Installation	1.00	x	2,797.10	x	1.1320	=	3,166.32	
			new tub/shower for ADA bathroom								
163	22 42 39 00 0042	EA	Single Supply EcoPower® Faucet, Polished Chrome Finish (Toto TEL3LS10#CP)								$709.36
				Quantity		Unit Price		Factor		Total	
			Installation	1.00	x	626.64	x	1.1320	=	709.36	
			ADA sink, faucet, and drain cover.								
164	22 42 39 00 0064	EA	Three Lever Handle, Chrome Shower And Tub Filler (American Standard Colony Soft 3375.502)								$293.63
				Quantity		Unit Price		Factor		Total	
			Installation	1.00	x	218.72	x	1.1320	=	247.59	
			Demolition	1.00	x	40.67	x	1.1320	=	46.04	
			per plans								
165	22 42 39 00 0210	EA	Lavatory Protective Enclosure (IPS Truebro Lav Shield)								$350.49
				Quantity		Unit Price		Factor		Total	
			Installation	2.00	x	154.81	x	1.1320	=	350.49	
			drain cover for ADA kitchen and bathroom sink								
166	22 42 39 00 0217	EA	1/2" NPT x 3/8" Compression Chrome, Quarter Turn Dual Angle Stop (SharkBite 25558)								$555.72
				Quantity		Unit Price		Factor		Total	
			Installation	10.00	x	41.22	x	1.1320	=	466.61	
			Demolition	8.00	x	9.84	x	1.1320	=	89.11	
			new angle stops installed in bathrooms and kitchens								

Subtotal for Section - 22 **$61,651.38**

Section - 23

167	23 05 93 00 0017	EA	Balancing HVAC Duct System, Floor Height Supply, Return, Exhaust, Register And Diffuser								$61.88
				Quantity		Unit Price		Factor		Total	
			Installation	1.00	x	54.66	x	1.1320	=	61.88	
			required setup, balancing, and charging for new system								
168	23 09 23 53 0284	EA	Scheduling Program, HVAC (AHU, RTU, AC Units, Etcetera) Programming Measures								$3,880.60
				Quantity		Unit Price		Factor		Total	
			Installation	1.00	x	3,428.09	x	1.1320	=	3,880.60	
			required setup, balancing, and charging for new system								

Work Order Number: 116760.00
Work Order Title: Concord Unit 2956 Conversion

Section - 23

169	23 31 13 16 0063	EA	4" Diameter, 26 Gauge, 2" WG And Less (Class C), Galvanized Sheet Metal Round And Flat-Oval Connector									$240.41
				Quantity		Unit Price		Factor		Total		
			Installation	14.00	x	15.17	x	1.1320	=	240.41		
			exhaust ducting for dyer per plans									
170	23 33 13 13 0006	EA	12" Diameter Radial Opposed Blade Damper Round, Steel Construction, Manual Operated									$140.78
				Quantity		Unit Price		Factor		Total		
			Installation	1.00	x	113.45	x	1.1320	=	128.43		
			Demolition	1.00	x	10.91	x	1.1320	=	12.35		
			HVAC per plans									
171	23 33 46 00 0008	LF	12" Diameter Flexible Duct, R8.0 Insulated With Polyester Inner Liner And Metallized Outer Jacket									$2,231.74
				Quantity		Unit Price		Factor		Total		
			Installation	100.00	x	15.36	x	1.1320	=	1,738.75		
			Demolition	130.00	x	3.35	x	1.1320	=	492.99		
			HVAC per plans									
172	23 33 46 00 0020	EA	12" Diameter Flexible Duct Collar, Spin In Type, Sheet Metal, With Damper									$100.97
				Quantity		Unit Price		Factor		Total		
			Installation	1.00	x	76.62	x	1.1320	=	86.73		
			Demolition	1.00	x	12.58	x	1.1320	=	14.24		
			HVAC per plans									
173	23 34 16 00 0127	EA	30" Diameter Wheel, 2 HP, 10,192 CFM At 1/4" Static Pressure, Belt Drive, Kitchen Upblast Exhaust Fan115/208-230/60/3. Includes heat baffle, grease baffle and disconnect switch.									$9,622.60
				Quantity		Unit Price		Factor		Total		
			Installation	2.00	x	4,153.39	x	1.1320	=	9,403.27		
			Demolition	1.00	x	193.75	x	1.1320	=	219.33		
			removal of one existing and installation of 2 new									
174	23 34 16 00 0275	EA	109 CFM, Ceiling/Wall Mounted, Metal Intake Grille, Heavy Duty/Continuous Operation Exhaust Fan (Broan® LoSone® Ventilator L100MG)									$897.54
				Quantity		Unit Price		Factor		Total		
			Installation	2.00	x	379.30	x	1.1320	=	858.74		
			Demolition	1.00	x	34.28	x	1.1320	=	38.80		
			exhaust fan per plans EF-1									
175	23 37 13 13 0080	EA	20" x 20" Single Deflection Return/Exhaust Register, Aluminum, Opposed Blade Damper, Wall/Ceiling									$319.70
				Quantity		Unit Price		Factor		Total		
			Installation	1.00	x	265.64	x	1.1320	=	300.70		
			Demolition	1.00	x	16.78	x	1.1320	=	18.99		
			HVAC per plans									
176	23 37 13 13 0225	EA	18" x 8" 4-Way Adjustable Wall Supply Grille, Adjustable Deflection, Aluminum Construction									$2,395.67
				Quantity		Unit Price		Factor		Total		
			Installation	7.00	x	275.90	x	1.1320	=	2,186.23		
			Demolition	11.00	x	16.82	x	1.1320	=	209.44		
			HVAC per plans									
177	23 54 16 13 0007	EA	120 MBH, 2,000 CFM Up/Horizontal Flow Multi-Speed, Two Stage 96% AFUE Gas FurnaceBlower cooling capacity up to 5 tons.									$5,879.99
				Quantity		Unit Price		Factor		Total		
			Installation	2.00	x	2,597.17	x	1.1320	=	5,879.99		
			per plans. SH-1 and SH-2 wall mounted furnaces									

Work Order Number: 116760.00
Work Order Title: Concord Unit 2956 Conversion

Section - 23

178	23 81 49 00 0020	EA	7-1/2 Ton Indoor Section Split Heat Pump Packaged Unit, Horizontal Upflow With 10 KW Electric Heat									$4,932.97
				Quantity		Unit Price		Factor		Total		
			Installation	1.00	x	4,047.74	x	1.1320	=	4,582.04		
			Demolition	1.00	x	310.01	x	1.1320	=	350.93		
			new furnace per clients request									

Subtotal for Section - 23 **$30,704.85**

Section - 26

179	26 01 20 91 0002	EA	Lock Out/Tag Out Local DisconnectExcludes tag or padlock See CSI section 26 01 20 91-0004 for padlock, 26 01 20 91-0005 for tag(s).									$523.83
				Quantity		Unit Price		Factor		Total		
			Installation	15.00	x	30.85	x	1.1320	=	523.83		
			LOTO of existing circuits									
180	26 05 19 16 0402	MLF	#12 AWG, 3 Conductors, 600 Volt, Type NM, Copper, Non-Metallic Sheathed Cable									$12,214.42
				Quantity		Unit Price		Factor		Total		
			Installation	4.00	x	2,697.53	x	1.1320	=	12,214.42		
			for new electrical runs per plans									
181	26 05 19 16 0402	0377	For Installation In Wood Stud Wall (Includes Drilling), Add									$1,272.82
				Quantity		Unit Price		Factor		Total		
			Installation	4.00	x	281.10	x	1.1320	=	1,272.82		
182	26 09 23 00 0109	EA	Wall Switch Replacement Occupancy Sensor, Single GangIncludes integral occupancy sensor and relay.									$1,204.00
				Quantity		Unit Price		Factor		Total		
			Installation	10.00	x	106.36	x	1.1320	=	1,204.00		
			per plans									
183	26 09 23 00 0235	EA	Passive Infrared, Wall Switch Mounted, Wired Occupancy Sensor (Encelium PW-100-24)Excludes GB II cable.									$586.31
				Quantity		Unit Price		Factor		Total		
			Installation	2.00	x	258.97	x	1.1320	=	586.31		
			for bathrooms									
184	26 24 13 00 0213	EA	800 Amperes, 480 Volt, 4 Wire, Switchboard Incoming No Switch Circuit									$5,781.11
				Quantity		Unit Price		Factor		Total		
			Installation	1.00	x	4,332.49	x	1.1320	=	4,904.38		
			Demolition	1.00	x	774.50	x	1.1320	=	876.73		
			for new main panel to new units subpanels									
185	26 24 16 00 0470	EA	200 Ampere Rating, Main Breaker, Indoor, 42 Circuit, 4 Wire, 120/208 Volt, Assembled Panelboard With 20 Ampere, 1 Pole Plug-In Breakers									$7,931.90
				Quantity		Unit Price		Factor		Total		
			Installation	2.00	x	3,075.97	x	1.1320	=	6,964.00		
			Demolition	1.00	x	855.04	x	1.1320	=	967.91		
			1 new sub panel for each unit									
186	26 27 13 00 0125	EA	Single Phase M-90 Meter, Socket, NEMA 3R Enclosure									$6,442.28
				Quantity		Unit Price		Factor		Total		
			Installation	6.00	x	905.76	x	1.1320	=	6,151.92		
			Demolition	5.00	x	51.30	x	1.1320	=	290.36		
			installation of new meters for building									
187	26 27 26 00 0009	EA	20 Amperes, 1 Gang, GFI, Duplex Receptacle Assembly									$3,825.42
				Quantity		Unit Price		Factor		Total		
			Installation	30.00	x	96.40	x	1.1320	=	3,273.74		
			Demolition	15.00	x	32.49	x	1.1320	=	551.68		
			All new GFI outlets throughout per clients request									

Contractor's Price Proposal - Detail Continues..

Work Order Number: 116760.00
Work Order Title: Concord Unit 2956 Conversion

Section - 26

188	26 27 26 00 0125		EA	20 Amperes, 125 Volt Single Specification Grade Tamper Resistant ReceptaclePass & Seymour TR5351.									$1,944.32
					Quantity		Unit Price		Factor		Total		
				Installation	40.00	x	34.39	x	1.1320	=	1,557.18		
				Demolition	40.00	x	8.55	x	1.1320	=	387.14		
				all new outlets throughout per clients request									
189	26 27 26 00 0138		EA	1 Gang, 20 Amperes, 120/277 Volt, SPST, Switch Assembly									$3,327.23
					Quantity		Unit Price		Factor		Total		
				Installation	25.00	x	85.08	x	1.1320	=	2,407.76		
				Demolition	25.00	x	32.49	x	1.1320	=	919.47		
				25 switches total in both units									
190	26 51 19 00 0312		EA	8" Diameter, 1,200 Lumens, Recessed LED Downlight With Open Trim (Lithonia DOM8 LED)									$7,780.09
					Quantity		Unit Price		Factor		Total		
				Installation	19.00	x	324.11	x	1.1320	=	6,970.96		
				Demolition	19.00	x	37.62	x	1.1320	=	809.13		
				19 new slim LED lights per plans and owners request									
191	26 51 19 00 0312	0543	EA	For Dimming Driver And Sensor Switch nLight Dimming Relay, Add									$1,339.77
					Quantity		Unit Price		Factor		Total		
				Installation	17.00	x	69.62	x	1.1320	=	1,339.77		
192	26 51 19 00 0430		EA	5” Shallow, Insulated Ceiling, Air-Tite New Construction (Cooper Halo H25ICAT)									$314.84
					Quantity		Unit Price		Factor		Total		
				Installation	3.00	x	92.71	x	1.1320	=	314.84		
				3 new 5" slim LED lights per plans									
193	26 51 19 00 0470		EA	2-1/2" Diameter x 15-1/2" High, Polished Nickel, LED Wall Sconce (Hudson Valley Lighting SHAW 1200-PN)									$1,017.22
					Quantity		Unit Price		Factor		Total		
				Installation	2.00	x	415.10	x	1.1320	=	939.79		
				Demolition	2.00	x	34.20	x	1.1320	=	77.43		
				2 new wall sconces per plans in bathrooms									
194	26 56 19 00 0031		EA	9,503 Lumens, 77 Watt, 3 LEDs, Wall Mounted Security Fixture (Jarvis Corp WMFT-350)									$1,530.14
					Quantity		Unit Price		Factor		Total		
				Installation	3.00	x	388.10	x	1.1320	=	1,317.99		
				Demolition	3.00	x	62.47	x	1.1320	=	212.15		
				replace 3 existing exterior lights per clients request									

Subtotal for Section - 26 **$57,035.70**

Section - 31

195	31 05 16 00 0002		CY	#2 Stone Aggregate Fill (1-1/2" To 2-1/2" Clean)									$1,295.01
					Quantity		Unit Price		Factor		Total		
				Installation	25.00	x	45.76	x	1.1320	=	1,295.01		
				4" deep, 200 LF, 2' wide base for backfill for trenching. 20 CY for footings, and slabs									
196	31 05 16 00 0002	0053		For Up To 8, Add									$51.79
					Quantity		Unit Price		Factor		Total		
				Installation	5.00	x	9.15	x	1.1320	=	51.79		
197	31 11 00 00 0008		ACR	Clearing By Machine - Light Brush Without Grub									$174.72
					Quantity		Unit Price		Factor		Total		
				Installation	0.50	x	308.69	x	1.1320	=	174.72		
				clear out weeds in back yard									

Contractor's Price Proposal - Detail Continues..

Work Order Number: 116760.00
Work Order Title: Concord Unit 2956 Conversion

Section - 31

198	31 11 00 00 0017	CY	Hand Loading Of Cleared And Grubbed Material									$849.91
				Quantity		Unit Price		Factor		Total		
			Installation	20.00	x	37.54	x	1.1320	=	849.91		
			clear out weeds in back yard									
199	31 23 16 13 0007	CY	Excavation For Trenching By Hand In SoilIncludes stockpiling excess materials and trimming sides and bottom of trench.									$3,505.24
				Quantity		Unit Price		Factor		Total		
			Installation	25.00	x	123.86	x	1.1320	=	3,505.24		
			20" deep, 200 LF, 2' wide									
200	31 23 16 13 0011	CY	Backfilling or Placing Subbase for Trenches with Imported or Stockpiled Materials by Hand									$973.80
				Quantity		Unit Price		Factor		Total		
			Installation	25.00	x	34.41	x	1.1320	=	973.80		
			20" deep, 200 LF, 2' wide									
201	31 23 16 13 0014	CY	Compaction of Fill or Subbase for Trenches by Hand									$1,098.61
				Quantity		Unit Price		Factor		Total		
			Installation	25.00	x	38.82	x	1.1320	=	1,098.61		
			20" deep, 200 LF, 2' wide									
202	31 23 16 36 0009	CY	Excavation For Building Foundations And Other Structures By Hand in Soil									$6,309.43
				Quantity		Unit Price		Factor		Total		
			Installation	45.00	x	123.86	x	1.1320	=	6,309.43		
			for footings and slab									
203	31 23 16 36 0019	CY	Backfilling Around Building Foundations And Other Structures By Hand									$1,335.53
				Quantity		Unit Price		Factor		Total		
			Installation	20.00	x	58.99	x	1.1320	=	1,335.53		
			for footings and slab									
204	31 23 16 36 0022	CY	Compaction Of Fill Or Subbase For Building Foundations and Other Structures by Hand									$1,976.98
				Quantity		Unit Price		Factor		Total		
			Installation	45.00	x	38.81	x	1.1320	=	1,976.98		
			for footings and slab									

Subtotal for Section - 31 **$17,571.02**

Section - 32

205	32 16 13 13 0016	LF	6" x 12" Cast In Place Concrete Gutter With 6" Curb And Face - Straight									$609.07
				Quantity		Unit Price		Factor		Total		
			Installation	15.00	x	24.92	x	1.1320	=	423.14		
			Demolition	15.00	x	10.95	x	1.1320	=	185.93		
			for parking lot ADA modifications									
206	32 16 23 00 0002	SF	4" Cast In Place Concrete Sidewalk									$586.15
				Quantity		Unit Price		Factor		Total		
			Installation	60.00	x	8.63	x	1.1320	=	586.15		
			for parking lot ADA modifications									
207	32 16 23 00 0002 0094		For Up To 100, Add									$248.59
				Quantity		Unit Price		Factor		Total		
			Installation	60.00	x	3.66	x	1.1320	=	248.59		
208	32 16 23 00 0008	EA	Finish Concrete Handicap Drop Section In SidewalkExcludes patterned (tactile) finish.									$145.65
				Quantity		Unit Price		Factor		Total		
			Installation	1.00	x	128.67	x	1.1320	=	145.65		
			for parking lot ADA modifications									

Contractor's Price Proposal - Detail Continues..

Work Order Number: 116760.00
Work Order Title: Concord Unit 2956 Conversion

Section - 32

209	32 17 23 13 0074	SF	Solid Area, Painted Pavement Marking For Parking AreasUse task for lines >12" wide, stop bars, transverse lines, diagonal lines, crossing lanes, etc.									$281.82
				Quantity		Unit Price		Factor		Total		
			Installation	64.00	x	3.89	x	1.1320	=	281.82		
			for parking lot ADA modifications									
210	32 17 23 13 0088	EA	Handicap Symbol For Van Parking Stalls, Painted Pavement Marking For Parking AreasApproximate overall dimensions: 4-1/3' width x 5' height. White or blue symbol. Excludes striping.									$86.15
				Quantity		Unit Price		Factor		Total		
			Installation	2.00	x	38.05	x	1.1320	=	86.15		
			for parking lot ADA modifications									
211	32 17 26 00 0003	SF	Embedded, VPC Truncated Dome Detectable Warning SurfaceAlso raised strips or directional bars. All colors.									$832.25
				Quantity		Unit Price		Factor		Total		
			Installation	16.00	x	45.95	x	1.1320	=	832.25		
			new truncated domes per A-501									
212	32 31 23 00 0006	LF	6' High Privacy Tongue And Groove Vinyl Fence									$3,593.82
				Quantity		Unit Price		Factor		Total		
			Installation	45.00	x	63.16	x	1.1320	=	3,217.37		
			Demolition	45.00	x	7.39	x	1.1320	=	376.45		
			removal of existing vinyl fence and installation of new due to ADA width requirements . includes a 4' wide ADA gate									
213	32 31 23 00 0051	EA	6' High x 4' Wide Vinyl Gate For Privacy Or Semi-Privacy Fence And Hinge Set									$757.38
				Quantity		Unit Price		Factor		Total		
			Installation	1.00	x	611.32	x	1.1320	=	692.01		
			Demolition	1.00	x	57.74	x	1.1320	=	65.36		
			removal of existing vinyl fence and installation of new due to ADA width requirements . includes a 4' wide ADA gate									
214	32 31 23 00 0078	EA	Stainless Steel Latch Set									$124.46
				Quantity		Unit Price		Factor		Total		
			Installation	1.00	x	109.95	x	1.1320	=	124.46		
			removal of existing vinyl fence and installation of new due to ADA width requirements . includes a 4' wide ADA gate									

Subtotal for Section - 32 **$7,265.34**

Proposal Total **$610,749.96**

This total represents the correct total for the proposal. Any discrepancy between line totals, sub-totals and the proposal total is due to rounding.

The Percentage of NPP on this Proposal: **%**

GORDIAN®

Subcontractor Listing

Date: June 06, 2023

Re:

IQC Master Contract #:	CA-R7-GB06-123021-MDJ
Work Order #:	116760.00
Owner PO #:	
Title:	Concord Unit 2956 Conversion
Contractor:	MDJ Management
Proposal Value:	$610,749.96

Name of Contractor	Duties	Amount	%
Janus Corporation		$100,000.00	16.37
Refined Construction		$450,000.00	73.68

General Conditions for Construction Contracts - Public Housing Programs

U.S. Department of Housing and Urban Development
Office of Public and Indian Housing
OMB Approval No. 2577-0157 (exp. 11/30/2023)

Applicability. This form is applicable to any construction/development contract greater than $250,000.

Public reporting burden for this collection of information is estimated to average 1 hour. This includes the time for collecting, reviewing, and reporting the data. The information requested is required to obtain a benefit. This form includes those clauses required by OMB's common rule on grantee procurement, implemented at HUD in 2 CFR 200, and those requirements set forth in Section 3 of the Housing and Urban Development Act of 1968 and its amendment by the Housing and Community Development Act of 1992, implemented by HUD at 24 CFR Part 75. The form is required for construction contracts awarded by Public Housing Agencies (PHAs). The form is used by Housing Authorities in solicitations to provide necessary contract clauses. If the form were not used, PHAs would be unable to enforce their contracts. There are no assurances of confidentiality. HUD may not conduct or sponsor, and an applicant is not required to respond to a collection of information unless it displays a currently valid OMB control number.

	Clause	Page		Clause	Page
1.	Definitions	2		**Administrative Requirements**	
2.	Contractor's Responsibility for Work	2	25.	Contract Period	9
3.	Architect's Duties, Responsibilities and Authority	2	26.	Order of Precedence	9
4.	Other Contracts	3	27.	Payments	9
	Construction Requirements		28.	Contract Modifications	10
5.	Preconstruction Conference and Notice to Proceed	3	29.	Changes	10
6.	Construction Progress Schedule	3	30.	Suspension of Work	11
7.	Site Investigation and Conditions Affecting the Work	3	31.	Disputes	11
8.	Differing Site Conditions	4	32.	Default	11
9.	Specifications and Drawings for Construction	4	33.	Liquidated	12
10.	As-Built Drawings	5	34.	Termination of Convenience	12
11.	Material and Workmanship	5	35.	Assignment of Contract	12
12.	Permits and Codes	5	36.	Insurance	12
13.	Health, Safety, and Accident Prevention	6	37.	Subcontracts	13
14.	Temporary Buildings and Transportation Materials	6	38.	Subcontracting with Small and Minority Firms, Women's Business Enterprise, and Labor Surplus Area Firms	13
15.	Availability and Use of Utility Services	6	39.	Equal Employment Opportunity	13
16.	Protection of Existing Vegetation, Structures, Equipment, Utilities, and Improvements	6	40.	Employment, Training, and Contracting Opportunities for Low-Income Persons, Section 3 of the Housing and Urban Development Act of 1968	14
17.	Temporary Buildings and Transportation Materials	7	41.	Interest of Members of Congress	15
18.	Clean Air and Water	7	42.	Interest of Members, Officers, or Employees and Former Members, Officers, or Employees	15
19.	Energy Efficiency	7	43.	Limitations on Payments Made to Influence	15
20.	Inspection and Acceptance of Construction	7	44.	Royalties and Patents	15
21.	Use and Possession Prior to	8	45.	Examination and Retention of Contractor's Records	15
22.	Warranty of Title	8	46.	Labor Standards-Davis-Bacon and Related Acts	15
23.	Warranty of	8	47.	Non-Federal Prevailing Wage Rates	19
24.	Prohibition Against Liens	9	48.	Procurement of Recovered Materials	19

1. Definitions

(a) "Architect" means the person or other entity engaged by the PHA to perform architectural, engineering, design, and other services related to the work as provided for in the contract. When a PHA uses an engineer to act in this capacity, the terms "architect" and "engineer" shall be synonymous. The Architect shall serve as a technical representative of the Contracting Officer. The Architect's authority is as set forth elsewhere in this contract.

(b) "Contract" means the contract entered into between the PHA and the Contractor. It includes the forms of Bid, the Bid Bond, the Performance and Payment Bond or Bonds or other assurance of completion, the Certifications, Representations, and Other Statements of Bidders (form HUD-5370), these General Conditions of the Contract for Construction (form HUD-5370), the applicable wage rate determinations from the U.S. Department of Labor, any special conditions included elsewhere in the contract, the specifications, and drawings. It includes all formal changes to any of those documents by addendum, change order, or other modification.

(c) "Contracting Officer" means the person delegated the authority by the PHA to enter into, administer, and/or terminate this contract and designated as such in writing to the Contractor. The term includes any successor Contracting Officer and any duly authorized representative of the Contracting Officer also designated in writing. The Contracting Officer shall be deemed the authorized agent of the PHA in all dealings with the Contractor.

(d) "Contractor" means the person or other entity entering into the contract with the PHA to perform all of the work required under the contract.

(e) "Drawings" means the drawings enumerated in the schedule of drawings contained in the Specifications and as described in the contract clause entitled Specifications and Drawings for Construction herein.

(f) "HUD" means the United States of America acting through the Department of Housing and Urban Development including the Secretary, or any other person designated to act on its behalf. HUD has agreed, subject to the provisions of an Annual Contributions Terms and Conditions (ACC), to provide financial assistance to the PHA, which includes assistance in financing the work to be performed under this contract. As defined elsewhere in these General Conditions or the contract documents, the determination of HUD may be required to authorize changes in the work or for release of funds to the PHA for payment to the Contractor. Notwithstanding HUD's role, nothing in this contract shall be construed to create any contractual relationship between the Contractor and HUD.

(g) "Project" means the entire project, whether construction or rehabilitation, the work for which is provided for in whole or in part under this contract.

(h) "PHA" means the Public Housing Agency organized under applicable state laws which is a party to this contract.

(j) "Specifications" means the written description of the technical requirements for construction and includes the criteria and tests for determining whether the requirements are met.

(l) "Work" means materials, workmanship, and manufacture and fabrication of components.

2. Contractor's Responsibility for Work

(a) The Contractor shall furnish all necessary labor, materials, tools, equipment, and transportation necessary for performance of the work. The Contractor shall also furnish all necessary water, heat, light, and power not made available to the Contractor by the PHA pursuant to the clause entitled Availability and Use of Utility Services herein.

(b) The Contractor shall perform on the site, and with its own organization, work equivalent to at least [ ] (12 percent unless otherwise indicated) of the total amount of work to be performed under the order. This percentage may be reduced by a supplemental agreement to this order if, during performing the work, the Contractor requests a reduction and the Contracting Officer determines that the reduction would be to the advantage of the PHA.

(c) At all times during performance of this contract and until the work is completed and accepted, the Contractor shall directly superintend the work or assign and have on the work site a competent superintendent who is satisfactory to the Contracting Officer and has authority to act for the Contractor.

(d) The Contractor shall be responsible for all damages to persons or property that occur as a result of the Contractor's fault or negligence, and shall take proper safety and health precautions to protect the work, the workers, the public, and the property of others. The Contractor shall hold and save the PHA, its officers and agents, free and harmless from liability of any nature occasioned by the Contractor's performance. The Contractor shall also be responsible for all materials delivered and work performed until completion and acceptance of the entire work, except for any completed unit of work which may have been accepted under the contract.

(e) The Contractor shall lay out the work from base lines and bench marks indicated on the drawings and be responsible for all lines, levels, and measurements of all work executed under the contract. The Contractor shall verify the figures before laying out the work and will be held responsible for any error resulting from its failure to do so.

(f) The Contractor shall confine all operations (including storage of materials) on PHA premises to areas authorized or approved by the Contracting Officer.

(g) The Contractor shall at all times keep the work area, including storage areas, free from accumulations of waste materials. After completing the work and before final inspection, the Contractor shall (1) remove from the premises all scaffolding, equipment, tools, and materials (including rejected materials) that are not the property of the PHA and all rubbish caused by its work; (2) leave the work area in a clean, neat, and orderly condition satisfactory to the Contracting Officer; (3) perform all specified tests; and, (4) deliver the installation in complete and operating condition.

(h) The Contractor's responsibility will terminate when all work has been completed, the final inspection made, and the work accepted by the Contracting Officer. The Contractor will then be released from further obligation except as required by the warranties specified elsewhere in the contract.

3. Architect's Duties, Responsibilities, and Authority

(a) The Architect for this contract, and any successor, shall be designated in writing by the Contracting Officer.

(b) The Architect shall serve as the Contracting Officer's technical representative with respect to architectural, Schedule engineering, and design matters related to the work performed under the contract. The Architect may provide direction on contract performance. Such direction shall be within the scope of the contract and may not be of a nature which: (1) institutes additional work outside the scope of the contract; (2) constitutes a change as defined in the Changes clause herein; (3) causes an increase or decrease in the cost of the contract; (4) alters the Construction Progress Schedule; or (5) changes any of the other express terms or conditions of the contract.

(c) The Architect's duties and responsibilities may include but shall not be limited to:

(1) Making periodic visits to the work site, and on the basis of his/her on-site inspections, issuing written reports to the PHA which shall include all observed deficiencies. The Architect shall file a copy of the report with the Contractor's designated representative at the site;

(2) Making modifications in drawings and technical specifications and assisting the Contracting Officer in the preparation of change orders and other contract modifications for issuance by the Contracting Officer;

(3) Reviewing and making recommendations with respect to - (i) the Contractor's construction progress schedules; (ii) the Contractor's shop and detailed drawings; (iii) the machinery, mechanical and other equipment and materials or other articles proposed for use by the Contractor; and, (iv) the Contractor's price breakdown and progress payment estimates; and,

(4) Assisting in inspections, signing Certificates of Completion, and making recommendations with respect to acceptance of work completed under the contract.

4. Other Contracts

The PHA may undertake or award other contracts for additional work at or near the site of the work under this contract. The Contractor shall fully cooperate with the other contractors and with PHA employees and shall carefully adapt scheduling and performing the work under this contract to accommodate the additional work, heeding any direction that may be provided by the Contracting Officer. The Contractor shall not commit or permit any act that will interfere with the performance of work by any other contractor or by PHA employees

Construction Requirements

5. Pre-construction Conference and Notice to Proceed

(a) Within ten calendar days of contract execution, and prior to the commencement of work, the Contractor shall attend a preconstruction conference with representatives of the PHA, its Architect, and other interested parties convened by the PHA. The conference will serve to acquaint the participants with the general plan of the construction operation and all other requirements of the contract. The PHA will provide the Contractor with the date, time, and place of the conference.

(b) The contractor shall begin work upon receipt of a written Notice to Proceed from the Contracting Officer or designee. The Contractor shall not begin work prior to receiving such notice.

6. Construction Progress

(a) The Contractor shall, within five days after the work commences on the contract or another period of time determined by the Contracting Officer, prepare and submit to the Contracting Officer for approval three copies of a practicable schedule showing the order in which the Contractor proposes to perform the work, and the dates on which the Contractor contemplates starting and completing the several salient features of the work (including acquiring labor, materials, and equipment). The schedule shall be in the form of a progress chart of suitable scale to indicate appropriately the percentage of work scheduled for completion by any given date during the period. If the Contractor fails to submit a schedule within the time prescribed, the Contracting Officer may withhold approval of progress payments or take other remedies under the contract until the Contractor submits the required schedule.

(b) The Contractor shall enter the actual progress on the chart as required by the Contracting Officer, and immediately deliver three copies of the annotated schedule to the Contracting Officer. If the Contracting Officer determines, upon the basis of inspection conducted pursuant to the clause entitled Inspection and Acceptance of Construction, herein that the Contractor is not meeting the approved schedule, the Contractor shall take steps necessary to improve its progress, including those that may be required by the Contracting Officer, without additional cost to the PHA. In this circumstance, the Contracting Officer may require the Contractor to increase the number of shifts, overtime operations, days of work, and/or the amount of construction plant, and to submit for approval any supplementary schedule or schedules in chart form as the Contracting Officer deems necessary to demonstrate how the approved rate of progress will be regained.

(c) Failure of the Contractor to comply with the requirements of the Contracting Officer under this clause shall be grounds for a determination by the Contracting Officer that the Contractor is not prosecuting the work with sufficient diligence to ensure completion within the time specified in the Contract. Upon making this determination, the Contracting Officer may terminate the Contractor's right to proceed with the work, or any separable part of it, in accordance with the Default clause of this contract.

7. Site Investigation and Conditions Affecting the Work

(a) The Contractor acknowledges that it has taken steps reasonably necessary to ascertain the nature and location of the work, and that it has investigated and satisfied itself as to the general and local conditions which can affect the work or its cost, including but not limited to, (1) conditions bearing upon transportation, disposal, handling, and storage of materials; (2) the availability of labor, water, electric power, and roads;(3) uncertainties of weather, river stages, tides, or similar physical conditions at the site; (4) the conformation and conditions of the ground; and (5) the character of equipment and facilities needed preliminary to and during work performance. The Contractor also acknowledges that it has satisfied itself as to the character, quality, and quantity of surface and subsurface materials or obstacles to be encountered insofar as this information is

reasonably ascertainable from an inspection of the site, including all exploratory work done by the PHA, as well as from the drawings and specifications made a part of this contract. Any failure of the Contractor to take the actions described and acknowledged in this paragraph will not relieve the Contractor from responsibility for estimating properly the difficulty and cost of successfully performing the work, or for proceeding to successfully perform the work without additional expense to the PHA.

(b) The PHA assumes no responsibility for any conclusions or interpretations made by the Contractor based on the information made available by the PHA. Nor does the PHA assume responsibility for any understanding reached or representation made concerning conditions which can affect the work by any of its officers or agents before the execution of this contract, unless that understanding or representation is expressly stated in this contract.

8. Differing Site Conditions

(a) The Contractor shall promptly, and before the conditions are disturbed, give a written notice to the Contracting Officer of (1) subsurface or latent physical conditions at the site which differ materially from those indicated in this contract, or (2) unknown physical conditions at the site(s), of an unusual nature, which differ materially from those ordinarily encountered and generally recognized as inhering in work of the character provided for in the contract.

(b) The Contracting Officer shall investigate the site conditions promptly after receiving the notice. Work shall not proceed at the affected site, except at the Contractor's risk, until the Contracting Officer has provided written instructions to the Contractor. If the conditions do materially so differ and cause an increase or decrease in the Contractor's cost of, or the time required for, performing any part of the work under this contract, whether or not changed as a result of the conditions, the Contractor shall file a claim in writing to the PHA within ten days after receipt of such instructions and, in any event, before proceeding with the work. An equitable adjustment in the contract price, the delivery schedule, or both shall be made under this clause and the contract modified in writing accordingly.

(c) No request by the Contractor for an equitable adjustment to the contract under this clause shall be allowed, unless the Contractor has given the written notice required; provided, that the time prescribed in (a) above for giving written notice may be extended by the Contracting Officer.

(d) No request by the Contractor for an equitable adjustment to the contract for differing site conditions shall be allowed if made after final payment under this contract.

9. Specifications and Drawings for Construction

(a) The Contractor shall keep on the work site a copy of the drawings and specifications and shall at all times give the Contracting Officer access thereto. Anything mentioned in the specifications and not shown on the drawings, or shown on the drawings and not mentioned in the specifications, shall be of like effect as if shown or mentioned in both. In case of difference between drawings and specifications, the specifications shall govern. In case of discrepancy in the figures, in the drawings, or in the specifications, the matter shall be promptly submitted to the Contracting Officer, who shall promptly make a determination in writing. Any adjustment by the Contractor without such a determination shall be at its own risk and expense. The Contracting Officer shall furnish from time to time such detailed drawings and other information as considered necessary, unless otherwise provided.

(b) Wherever in the specifications or upon the drawings the words "directed", "required", "ordered", "designated", "prescribed", or words of like import are used, it shall be understood that the "direction", "requirement", "order", "designation", or "prescription", of the Contracting Officer is intended and similarly the words "approved", "acceptable", "satisfactory", or words of like import shall mean "approved by", or "acceptable to", or "satisfactory to" the Contracting Officer, unless otherwise expressly stated.

(c) Where "as shown" "as indicated", "as detailed", or words of similar import are used, it shall be understood that the reference is made to the drawings accompanying this contract unless stated otherwise. The word "provided" as used herein shall be understood to mean "provide complete in place" that is "furnished and installed".

(d) "Shop drawings" means drawings, submitted to the PHA by the Contractor, subcontractor, or any lower tier subcontractor, showing in detail (1) the proposed fabrication and assembly of structural elements and (2) the installation (i.e., form, fit, and attachment details) of materials of equipment. It includes drawings, diagrams, layouts, schematics, descriptive literature, illustrations, schedules, performance and test data, and similar materials furnished by the Contractor to explain in detail specific portions of the work required by the contract. The PHA may duplicate, use, and disclose in any manner and for any purpose shop drawings delivered under this contract.

(e) If this contract requires shop drawings, the Contractor shall coordinate all such drawings, and review them for accuracy, completeness, and compliance with other contract requirements and shall indicate its approval thereon as evidence of such coordination and review. Shop drawings submitted to the Contracting Officer without evidence of the Contractor's approval may be returned for resubmission. The Contracting Officer will indicate an approval or disapproval of the shop drawings and if not approved as submitted shall indicate the PHA's reasons therefore. Any work done before such approval shall be at the Contractor's risk. Approval by the Contracting Officer shall not relieve the Contractor from responsibility for any errors or omissions in such drawings, nor from responsibility for complying with the requirements of this contract, except with respect to variations described and approved in accordance with (f) below.

(f) If shop drawings show variations from the contract requirements, the Contractor shall describe such variations in writing, separate from the drawings, at the time of submission. If the Architect approves any such variation and the Contracting Officer concurs, the Contracting Officer shall issue an appropriate modification to the contract, except that, if the variation is minor or does not involve a change in price or in time of performance, a modification need not be issued.

(g) It shall be the responsibility of the Contractor to make timely requests of the PHA for such large scale and full size drawings, color schemes, and other additional information, not already in his possession, which shall be

required in the planning and production of the work. Such requests may be submitted as the need arises, but each such request shall be filed in ample time to permit appropriate action to be taken by all parties involved so as to avoid delay.

(h) The Contractor shall submit to the Contracting Officer for approval four copies (unless otherwise indicated) of all shop drawings as called for under the various headings of these specifications. Three sets (unless otherwise indicated) of all shop drawings, will be retained by the PHA and one set will be returned to the Contractor. As required by the Contracting Officer, the Contractor, upon completing the work under this contract, shall furnish a complete set of all shop drawings as finally approved. These drawings shall show all changes and revisions made up to the time the work is completed and accepted.

(i) This clause shall be included in all subcontracts at any tier. It shall be the responsibility of the Contractor to ensure that all shop drawings prepared by subcontractors are submitted to the Contracting Officer.

10. As-Built Drawings

(a) "As-built drawings," as used in this clause, means drawings submitted by the Contractor or subcontractor at any tier to show the construction of a particular structure or work as actually completed under the contract. "As-built drawings" shall be synonymous with "Record drawings."

(b) As required by the Contracting Officer, the Contractor shall provide the Contracting Officer accurate information to be used in the preparation of permanent as-built drawings. For this purpose, the Contractor shall record on one set of contract drawings all changes from the installations originally indicated, and record final locations of underground lines by depth from finish grade and by accurate horizontal offset distances to permanent surface improvements such as buildings, curbs, or edges of walks.

(c) This clause shall be included in all subcontracts at any tier. It shall be the responsibility of the Contractor to ensure that all as-built drawings prepared by subcontractors are submitted to the Contracting Officer.

11. Material and Workmanship

(a) All equipment, material, and articles furnished under this contract shall be new and of the most suitable grade for the purpose intended, unless otherwise specifically provided in this contract. References in the contract to equipment, material, articles, or patented processes by trade name, make, or catalog number, shall be regarded as establishing a standard of quality and shall not be construed as limiting competition. The Contractor may, at its option, use any equipment, material, article, or process that, in the judgment of, and as approved by the Contracting Officer, is equal to that named in the specifications, unless otherwise specifically provided in this contract.

(b) Approval of equipment and materials.

(1) The Contractor shall obtain the Contracting Officer's approval of the machinery and mechanical and other equipment to be incorporated into the work. When requesting approval, the Contractor shall furnish to the Contracting Officer the name of the manufacturer, the model number, and other information concerning the performance, capacity, nature, and rating of the machinery and mechanical and other equipment. When required by this contract or by the Contracting Officer, the Contractor shall also obtain the Contracting Officer's approval of the material or articles which the Contractor contemplates incorporating into the work. When requesting approval, the Contractor shall provide full information concerning the material or articles. Machinery, equipment, material, and articles that do not have the required approval shall be installed or used at the risk of subsequent rejection.

(2) When required by the specifications or the Contracting Officer, the Contractor shall submit appropriately marked samples (and certificates related to them) for approval at the Contractor's expense, with all shipping charges prepaid. The Contractor shall label, or otherwise properly mark on the container, the material or product represented, its place of origin, the name of the producer, the Contractor's name, and the identification of the construction project for which the material or product is intended to be used.

(3) Certificates shall be submitted in triplicate, describing each sample submitted for approval and certifying that the material, equipment or accessory complies with contract requirements. The certificates shall include the name and brand of the product, name of manufacturer, and the location where produced.

(4) Approval of a sample shall not constitute a waiver of the PHA right to demand full compliance with contract requirements. Materials, equipment and accessories may be rejected for cause even though samples have been approved.

(5) Wherever materials are required to comply with recognized standards or specifications, such specifications shall be accepted as establishing the technical qualities and testing methods, but shall not govern the number of tests required to be made nor modify other contract requirements. The Contracting Officer may require laboratory test reports on items submitted for approval or may approve materials on the basis of data submitted in certificates with samples. Check tests will be made on materials delivered for use only as frequently as the Contracting Officer determines necessary to insure compliance of materials with the specifications. The Contractor will assume all costs of retesting materials which fail to meet contract requirements and/or testing materials offered in substitution for those found deficient.

(6) After approval, samples will be kept in the Project office until completion of work. They may be built into the work after a substantial quantity of the materials they represent has been built in and accepted.

(c) Requirements concerning lead-based paint. The Contractor shall comply with the requirements concerning lead-based paint contained in the Lead-Based Paint Poisoning Prevention Act (42 U.S.C. 4821-4846) as implemented by 24 CFR Part 35.

12. Permits and Codes

(a) The Contractor shall give all notices and comply with all applicable laws, ordinances, codes, rules and regulations. Notwithstanding the requirement of the Contractor to comply with the drawings and specifications in the contract, all work installed shall comply with all applicable codes and regulations as amended by any

waivers. Before installing the work, the Contractor shall examine the drawings and the specifications for compliance with applicable codes and regulations bearing on the work and shall immediately report any discrepancy it may discover to the Contracting Officer. Where the requirements of the drawings and specifications fail to comply with the applicable code or regulation, the Contracting Officer shall modify the contract by change order pursuant to the clause entitled Changes herein to conform to the code or regulation.

(b) The Contractor shall secure and pay for all permits, fees, and licenses necessary for the proper execution and completion of the work. Where the PHA can arrange for the issuance of all or part of these permits, fees and licenses, without cost to the Contractor, the contract amount shall be reduced accordingly.

13. Health, Safety, and Accident Prevention

(a) In performing this contract, the Contractor shall:

(1) Ensure that no laborer or mechanic shall be required to work in surroundings or under working conditions which are unsanitary, hazardous, or dangerous to his/her health and/or safety as determined under construction safety and health standards promulgated by the Secretary of Labor by regulation;

(2) Protect the lives, health, and safety of other persons;

(3) Prevent damage to property, materials, supplies, and equipment; and,

(4) Avoid work interruptions.

(b) For these purposes, the Contractor shall:

(1) Comply with regulations and standards issued by the Secretary of Labor at 29 CFR Part 1926. Failure to comply may result in imposition of sanctions pursuant to the Contract Work Hours and Safety Standards Act (Public Law 91-54, 83 Stat. 96), 40 U.S.C. 3701 et seq.; and

(2) Include the terms of this clause in every subcontract so that such terms will be binding on each subcontractor.

(c) The Contractor shall maintain an accurate record of exposure data on all accidents incident to work performed under this contract resulting in death, traumatic injury, occupational disease, or damage to property, materials, supplies, or equipment, and shall report this data in the manner prescribed by 29 CFR Part 1904.

(d) The Contracting Officer shall notify the Contractor of any noncompliance with these requirements and of the corrective action required. This notice, when delivered to the Contractor or the Contractor's representative at the site of the work, shall be deemed sufficient notice of the noncompliance and corrective action required. After receiving the notice, the Contractor shall immediately take corrective action. If the Contractor fails or refuses to take corrective action promptly, the Contracting Officer may issue an order stopping all or part of the work until satisfactory corrective action has been taken. The Contractor shall not base any claim or request for equitable adjustment for additional time or money on any stop order issued under these circumstances.

(e) The Contractor shall be responsible for its subcontractors' compliance with the provisions of this clause. The Contractor shall take such action with respect to any subcontract as the PHA, the Secretary of Housing and Urban Development, or the Secretary of Labor shall direct as a means of enforcing such provisions.

14. Temporary Heating

The Contractor shall provide and pay for temporary heating, covering, and enclosures necessary to properly protect all work and materials against damage by dampness and cold, to dry out the work, and to facilitate the completion of the work. Any permanent heating equipment used shall be turned over to the PHA in the condition and at the time required by the specifications.

15. Availability and Use of Utility Services

(a) The PHA shall make all reasonably required amounts of utilities available to the Contractor from existing outlets and supplies, as specified in the contract. Unless otherwise provided in the contract, the amount of each utility service consumed shall be charged to or paid for by the Contractor at prevailing rates charged to the PHA or, where the utility is produced by the PHA, at reasonable rates determined by the Contracting Officer. The Contractor shall carefully conserve any utilities furnished without charge.

(b) The Contractor, at its expense and in a manner satisfactory to the Contracting Officer, shall install and maintain all necessary temporary connections and distribution lines, and all meters required to measure the amount of each utility used for the purpose of determining charges. Before final acceptance of the work by the PHA, the Contractor shall remove all the temporary connections, distribution lines, meters, and associated paraphernalia.

16. Protection of Existing Vegetation, Structures, Equipment, Utilities, and Improvements

(a) The Contractor shall preserve and protect all structures, equipment, and vegetation (such as trees, shrubs, and grass) on or adjacent to the work site, which are not to be removed under this contract, and which do not unreasonably interfere with the work required under this contract.

(b) The Contractor shall only remove trees when specifically authorized to do so, and shall avoid damaging vegetation that will remain in place. If any limbs or branches of trees are broken during performance of this contract, or by the careless operation of equipment, or by workmen, the Contractor shall trim those limbs or branches with a clean cut and paint the cut with a tree-pruning compound as directed by the Contracting Officer.

(c) The Contractor shall protect from damage all existing improvements and utilities (1) at or near the work site and (2) on adjacent property of a third party, the locations of which are made known to or should be known by the Contractor. Prior to disturbing the ground at the construction site, the Contractor shall ensure that all underground utility lines are clearly marked.

(d) The Contractor shall shore up, brace, underpin, secure, and protect as necessary all foundations and other parts of existing structures adjacent to, adjoining, and in the vicinity of the site, which may be affected by the excavations or other operations connected with the construction of the project.

(e) Any equipment temporarily removed as a result of work under this contract shall be protected, cleaned, and replaced in the same condition as at the time of award of this contract.

(f) New work which connects to existing work shall correspond in all respects with that to which it connects and/or be similar to existing work unless otherwise required by the specifications.

(g) No structural members shall be altered or in any way weakened without the written authorization of the Contracting Officer, unless such work is clearly specified in the plans or specifications.

(h) If the removal of the existing work exposes discolored or unfinished surfaces, or work out of alignment, such surfaces shall be refinished, or the material replaced as necessary to make the continuous work uniform and harmonious. This, however, shall not be construed to require the refinishing or reconstruction of dissimilar finishes previously exposed, or finished surfaces in good condition, but in different planes or on different levels **Construction** when brought together by the removal of intervening work, unless such refinishing or reconstruction is specified in the plans or specifications.

(i) The Contractor shall give all required notices to any adjoining or adjacent property owner or other party before the commencement of any work.

(j) The Contractor shall indemnify and save harmless the PHA from any damages on account of settlement or the loss of lateral support of adjoining property, any damages from changes in topography affecting drainage, and from all loss or expense and all damages for which the PHA may become liable in consequence of such injury or damage to adjoining and adjacent structures and their premises.

(k) The Contractor shall repair any damage to vegetation, structures, equipment, utilities, or improvements, including those that are the property of a third party, resulting from failure to comply with the requirements of this contract or failure to exercise reasonable care in performing the work. If the Contractor fails or refuses to repair the damage promptly, the Contracting Officer may have the necessary work performed and charge the cost to the Contractor.

17. Temporary Buildings and Transportation of Materials

(a) Temporary buildings (e.g., storage sheds, shops, offices, sanitary facilities) and utilities may be erected by the Contractor only with the approval of the Contracting Officer and shall be built with labor and materials furnished by the Contractor without expense to the PHA. The temporary buildings and utilities shall remain the property of the Contractor and shall be removed by the Contractor at its expense upon completion of the work. With the written consent of the Contracting Officer, the buildings and utilities may be abandoned and need not be removed.

(b) The Contractor shall, as directed by the Contracting Officer, use only established roadways, or use temporary roadways constructed by the Contractor when and as authorized by the Contracting Officer. When materials are transported in prosecuting the work, vehicles shall not be loaded beyond the loading capacity recommended by the manufacturer of the vehicle or prescribed by any federal, state, or local law or regulation. When it is necessary to cross curbs or sidewalks, the Contractor shall protect them from damage. The Contractor shall repair or pay for the repair of any damaged curbs, sidewalks, or roads.

18. Clean Air and Water

The contactor shall comply with the Clean Air Act, as amended, 42 USC 7401 et seq., the Federal Water Pollution Control Water Act, as amended, 33 U.S.C. 1251 et seq., and standards issued pursuant thereto in the facilities in which this contract is to be performed.

19. Energy Efficiency

The Contractor shall comply with mandatory standards and policies relating to energy efficiency which are contained in the energy conservation plan issued in compliance with the Energy Policy and Conservation Act (Pub.L. 94-163) for the State in which the work under the contract is performed.

20. Inspection and Acceptance of

(a) Definitions. As used in this clause -

(1) “Acceptance” means the act of an authorized representative of the PHA by which the PHA approves and assumes ownership of the work performed under this contract. Acceptance may be partial or complete.

(2) “Inspection” means examining and testing the work performed under the contract (including, when appropriate, raw materials, equipment, components, and intermediate assemblies) to determine whether it conforms to contract requirements.

(3) “Testing” means that element of inspection that determines the properties or elements, including functional operation of materials, equipment, or their components, by the application of established scientific principles and procedures.

(b) The Contractor shall maintain an adequate inspection system and perform such inspections as will ensure that the work performed under the contract conforms to contract requirements. All work is subject to PHA inspection and test at all places and at all reasonable times before acceptance to ensure strict compliance with the terms of the contract.

(c) PHA inspections and tests are for the sole benefit of the PHA and do not: (1) relieve the Contractor of responsibility for providing adequate quality control measures; (2) relieve the Contractor of responsibility for loss or damage of the material before acceptance; (3) constitute or imply acceptance; or, (4) affect the continuing rights of the PHA after acceptance of the completed work under paragraph (j) below.

(d) The presence or absence of the PHA inspector does not relieve the Contractor from any contract requirement, nor is the inspector authorized to change any term or condition of the specifications without the Contracting Officer’s written authorization. All instructions and approvals with respect to the work shall be given to the Contractor by the Contracting Officer.

(e) The Contractor shall promptly furnish, without additional charge, all facilities, labor, and material reasonably needed for performing such safe and convenient inspections and tests as may be required by the Contracting Officer. The PHA may charge to the Contractor any additional cost of inspection or test when work is not ready at the time specified by the Contractor for inspection or test, or when prior rejection makes reinspection or retest necessary. The PHA shall perform all inspections and tests in a manner that will not unnecessarily delay the work. Special, full size, and performance tests shall be performed as described in the contract.

(f) The PHA may conduct routine inspections of the construction site on a daily basis.

(g) The Contractor shall, without charge, replace or correct work found by the PHA not to conform to contract requirements, unless the PHA decides that it is in its interest to accept the work with an appropriate adjustment in contract price. The Contractor shall promptly segregate and remove rejected material from the premises.

(h) If the Contractor does not promptly replace or correct rejected work, the PHA may (1) by contract or otherwise, replace or correct the work and charge the cost to the Contractor, or (2) terminate for default the Contractor's right to proceed.

(i) If any work requiring inspection is covered up without approval of the PHA, it must, if requested by the Contracting Officer, be uncovered at the expense of the Contractor. If at any time before final acceptance of the entire work, the **Construction** PHA considers it necessary or advisable, to examine work already completed by removing or tearing it out, the Contractor, shall on request, promptly furnish all necessary facilities, labor, and material. If such work is found to be defective or nonconforming in any material respect due to the fault of the Contractor or its subcontractors, the Contractor shall defray all the expenses of the examination and of satisfactory reconstruction. If, however, such work is found to meet the requirements of the contract, the Contracting Officer shall make an equitable adjustment to cover the cost of the examination and reconstruction, including, if completion of the work was thereby delayed, an extension of time.

(j) The Contractor shall notify the Contracting Officer, in writing, as to the date when in its opinion all or a designated portion of the work will be substantially completed and ready for inspection. If the Architect determines that the state of preparedness is as represented, the PHA will promptly arrange for the inspection. Unless otherwise specified in the contract, the PHA shall accept, as soon as practicable after completion and inspection, all work required by the contract or that portion of the work the Contracting Officer determines and designates can be accepted separately. Acceptance shall be final and conclusive except for latent defects, fraud, gross mistakes amounting to fraud, or the PHA's right under any warranty or guarantee.

21. Use and Possession Prior to Completion

(a) The PHA shall have the right to take possession of or use any completed or partially completed part of the work. Before taking possession of or using any work, the Contracting Officer shall furnish the Contractor a list of items of work remaining to be performed or corrected on those portions of the work that the PHA intends to take possession of or use. However, failure of the Contracting Officer to list any item of work shall not relieve the Contractor of responsibility for complying with the terms of the contract. The PHA's possession or use shall not be deemed an acceptance of any work under the contract.

(b) While the PHA has such possession or use, the Contractor shall be relieved of the responsibility for (1) the loss of or damage to the work resulting from the PHA's possession or use, notwithstanding the terms of the clause entitled Permits and Codes herein; (2) all maintenance costs on the areas occupied; and, (3) furnishing heat, light, power, and water used in the areas occupied without proper remuneration therefore. If prior possession or use by the PHA delays the progress of the work or causes additional expense to the Contractor, an equitable adjustment shall be made in the contract price or the time of completion, and the contract shall be modified in writing accordingly.

22. Warranty of Title

The Contractor warrants good title to all materials, supplies, and equipment incorporated in the work and agrees to deliver the premises together with all improvements thereon free from any claims, liens or charges, and agrees further that neither it nor any other person, firm or corporation shall have any right to a lien upon the premises or anything appurtenant thereto.

23. Warranty of

(a) In addition to any other warranties in this contract, the Contractor warrants, except as provided in paragraph (j) of this clause, that work performed under this contract conforms to the contract requirements and is free of any defect in equipment, material, or workmanship performed by the Contractor or any subcontractor or supplier at any tier. This warranty shall continue for a period of _____ (one year unless otherwise indicated) from the date of final acceptance of the work. If the PHA takes possession of any part of the work before final acceptance, this warranty shall continue for a period of (one year unless otherwise indicated) from the date that the PHA takes possession.

(b) The Contractor shall remedy, at the Contractor's expense, any failure to conform, or any defect. In addition, the Contractor shall remedy, at the Contractor's expense, any damage to PHA-owned or controlled real or personal property when the damage is the result of—

(1) The Contractor's failure to conform to contract requirements; or

(2) Any defects of equipment, material, workmanship or design furnished by the Contractor.

(c) The Contractor shall restore any work damaged in fulfilling the terms and conditions of this clause. The Contractor's warranty with respect to work repaired or replaced will run for (one year unless otherwise indicated) from the date of repair or replacement.

(d) The Contracting Officer shall notify the Contractor, in writing, within a reasonable time after the discovery of any failure, defect or damage.

(e) If the Contractor fails to remedy any failure, defect, or damage within a reasonable time after receipt of notice, the PHA shall have the right to replace, repair or otherwise remedy the failure, defect, or damage at the Contractor's expense.

(f) With respect to all warranties, express or implied, from subcontractors, manufacturers, or suppliers for work performed and materials furnished under this contract, the Contractor shall:

(1) Obtain all warranties that would be given in normal commercial practice;

(2) Require all warranties to be executed in writing, for the benefit of the PHA; and,

(3) Enforce all warranties for the benefit of the PHA.

(g) In the event the Contractor's warranty under paragraph (a) of this clause has expired, the PHA may bring suit at its own expense to enforce a subcontractor's, manufacturer's or supplier's warranty.

(h) Unless a defect is caused by the negligence of the Contractor or subcontractor or supplier at any tier, the Contractor shall not be liable for the repair of any defect of material or design furnished by the PHA nor for the repair of any damage that results from any defect in PHA furnished material or design.

(i) Notwithstanding any provisions herein to the contrary, the establishment of the time periods in paragraphs (a) and (c) above relate only to the specific obligation of the Contractor to correct the work, and have no relationship to the time within which its obligation to comply with the contract may be sought to be enforced, nor to the time within which proceedings may be commenced to establish the Contractor's liability with respect to its obligation other than specifically to correct the work.

(j) This warranty shall not limit the PHA's rights under the Inspection and Acceptance of Construction clause of this contract with respect to latent defects, gross mistakes or fraud.

24. Prohibition Against Liens

The Contractor is prohibited from placing a lien on the PHA's property. This prohibition shall apply to all subcontractors at any tier and all materials suppliers.

Administrative Requirements

25. Contract Period

this contract within calendar days of the effective date of the contract, or within the time schedule established in the notice to proceed issued by the Contracting Officer.

26. Order of Provisions

accordance with the terms and conditions of the

In the event of a conflict between these General Conditions and the Specifications, the General Conditions shall prevail. In the event of a conflict between the contract and any applicable state or local law or regulation, the state or local law or regulation shall prevail; provided that such state or local law or regulation does not conflict with, or is less restrictive than applicable federal law, regulation, or Executive Order. In the event of such a conflict, applicable federal law, regulation, and Executive Order shall prevail.

27. Payments

retain ten (10) percent of the amount of progress

(a) The PHA shall pay the Contractor the price as provided in this contract.

(b) The PHA shall make progress payments approximately every 30 days as the work proceeds, on estimates of work accomplished which meets the standards of quality established under the contract, as approved by the Contracting Officer. The PHA may, subject to written determination and approval of the Contracting Officer, make more frequent payments to contractors which are qualified small businesses.

(c) Before the first progress payment under this contract, the Contractor shall furnish, in such detail as requested by the Contracting Officer, a breakdown of the total contract price showing the amount included therein for each principal category of the work, which shall substantiate the payment amount requested in order to provide a basis for determining progress payments. The breakdown shall be approved by the Contracting Officer and must be acceptable to HUD. If the contract covers more than one project, the Contractor shall furnish a separate breakdown for each. The values and quantities employed in making up this breakdown are for determining the amount of progress payments and shall not be construed as a basis for additions to or deductions from the contract price. The Contractor shall prorate its overhead and profit over the construction period of the contract.

(d) The Contractor shall submit, on forms provided by the PHA, periodic estimates showing the value of the work performed during each period based upon the approved

submitted not later than _____ days in advance of the date set for payment and are subject to correction and revision as required. The estimates must be approved by the Contracting Officer with the concurrence of the Architect prior to payment. If the contract covers more than one project, the Contractor shall furnish a separate progress payment estimate for each.

(e) Along with each request for progress payments and the required estimates, the Contractor shall furnish the following certification, or payment shall not be made: I hereby certify, to the best of my knowledge and belief, that:

(1) The amounts requested are only for performance in accordance with the specifications, terms, and conditions of the contract;

(2) Payments to subcontractors and suppliers have been made from previous payments received under the contract, and timely payments will be made from the proceeds of the payment covered by this certification, in accordance with subcontract agreements; and,

(3) This request for progress payments does not include any amounts which the prime contractor intends to withhold or retain from a subcontractor or supplier in

subcontract.

Name:

Title:

Date:

(f) Except as otherwise provided in State law, the PHA shall

payments until completion and acceptance of all work under the contract; except, that if upon completion of 50 percent of the work, the Contracting Officer, after consulting with the Architect, determines that the Contractor's performance and progress are satisfactory, the PHA may make the remaining payments in full for the work subsequently completed. If the Contracting Officer subsequently determines that the Contractor's performance and progress are unsatisfactory, the PHA shall reinstate the ten (10) percent (or other percentage as provided in State law) retainage until such time as the Contracting Officer determines that performance and progress are satisfactory.

(g) The Contracting Officer may authorize material delivered on the site and preparatory work done to be taken into consideration when computing progress payments.

Material delivered to the Contractor at locations other than the site may also be taken into consideration if the Contractor furnishes satisfactory evidence that (1) it has acquired title to such material; (2) the material is properly stored in a bonded warehouse, storage yard, or similar suitable place as may be approved by the Contracting Officer; (3) the material is insured to cover its full value; and (4) the material will be used to perform this contract. Before any progress payment which includes delivered material is made, the Contractor shall furnish such documentation as the Contracting Officer may require to assure the protection of the PHA's interest in such materials. The Contractor shall remain responsible for such stored material notwithstanding the transfer of title to the PHA.

(h) All material and work covered by progress payments made shall, at the time of payment become the sole property of the PHA, but this shall not be construed as (1) relieving the Contractor from the sole responsibility for all material and work upon which payments have been made or the restoration of any damaged work; or, (2) waiving the right of the PHA to require the fulfillment of all of the terms of the contract. In the event the work of the Contractor has been damaged by other contractors or persons other than employees of the PHA in the course of their employment, the Contractor shall restore such damaged work without cost to the PHA and to seek redress for its damage only from those who directly caused it.

(i) The PHA shall make the final payment due the Contractor under this contract after (1) completion and final acceptance of all work; and (2) presentation of release of all claims against the PHA arising by virtue of this contract, other than claims, in stated amounts, that the Contractor has specifically excepted from the operation of the release. Each such exception shall embrace no more than one claim, the basis and scope of which shall be clearly defined. The amounts for such excepted claims shall not be included in the request for final payment. A release may also be required of the assignee if the Contractor's claim to amounts payable under this contract has been assigned.

(j) Prior to making any payment, the Contracting Officer may require the Contractor to furnish receipts or other evidence of payment from all persons performing work and supplying material to the Contractor, if the Contracting Officer determines such evidence is necessary to substantiate claimed costs.

(k) The PHA shall not; (1) determine or adjust any claims for payment or disputes arising there under between the Contractor and its subcontractors or material suppliers; or, (2) withhold any moneys for the protection of the subcontractors or material suppliers. The failure or refusal of the PHA to withhold moneys from the Contractor shall in nowise impair the obligations of any surety or sureties under any bonds furnished under this contract.

28. Contract Modifications

(a) Only the Contracting Officer has authority to modify any term or condition of this contract. Any contract modification shall be authorized in writing.

(b) The Contracting Officer may modify the contract unilaterally (1) pursuant to a specific authorization stated in a contract clause (e.g., Changes); or (2) for administrative matters which do not change the rights or responsibilities of the parties (e.g., change in the PHA address). All other contract modifications shall be in the form of supplemental agreements signed by the Contractor and the Contracting Officer.

(c) When a proposed modification requires the approval of HUD prior to its issuance (e.g., a change order that exceeds the PHA's approved threshold), such modification shall not be effective until the required approval is received by the PHA.

29. Changes

(a) The Contracting Officer may, at any time, without notice to the sureties, by written order designated or indicated to be a change order, make changes in the work within the general scope of the contract including changes:
(1) In the specifications (including drawings and designs);
(2) In the method or manner of performance of the work;
(3) PHA-furnished facilities, equipment, materials, services, or site; or,
(4) Directing the acceleration in the performance of the work.

(b) Any other written order or oral order (which, as used in this paragraph (b), includes direction, instruction, interpretation, or determination) from the Contracting Officer that causes a change shall be treated as a change order under this clause; provided, that the Contractor gives the Contracting Officer written notice stating (1) the date, circumstances and source of the order and (2) that the Contractor regards the order as a change order.

(c) Except as provided in this clause, no order, statement or conduct of the Contracting Officer shall be treated as a change under this clause or entitle the Contractor to an equitable adjustment.

(d) If any change under this clause causes an increase or decrease in the Contractor's cost of, or the time required for the performance of any part of the work under this contract, whether or not changed by any such order, the Contracting Officer shall make an equitable adjustment and modify the contract in writing. However, except for a adjustment based on defective specifications, no proposal for any change under paragraph (b) above shall be allowed for any costs incurred more than 20 days (5 days for oral orders) before the Contractor gives written notice as required. In the case of defective specifications for which the PHA is responsible, the equitable adjustment shall include any increased cost reasonably incurred by the Contractor in attempting to comply with the defective specifications.

(e) The Contractor must assert its right to an adjustment under this clause within 30 days after (1) receipt of a written change order under paragraph (a) of this clause, or (2) the furnishing of a written notice under paragraph (b) of this clause, by submitting a written statement describing the general nature and the amount of the proposal. If the facts justify it, the Contracting Officer may extend the period for submission. The proposal may be included in the notice required under paragraph (b) above. No proposal by the Contractor for an equitable adjustment shall be allowed if asserted after final payment under this contract.

(f) The Contractor's written proposal for equitable adjustment shall be submitted in the form of a lump sum proposal supported with an itemized breakdown of all increases and decreases in the contract in at least the following details:

(1) Direct Costs. Materials (list individual items, the quantity and unit cost of each, and the aggregate cost); Transportation and delivery costs associated with materials; Labor breakdowns by hours or unit costs (identified with specific work to be performed); Construction equipment exclusively necessary for the change; Costs of preparation and/ or revision to shop drawings resulting from the change; Worker's Compensation and Public Liability Insurance; Employment taxes under FICA and FUTA; and, Bond Costs when size of change warrants revision.

(2) Indirect Costs. Indirect costs may include overhead, general and administrative expenses, and fringe benefits not normally treated as direct costs.

(3) Profit. The amount of profit shall be negotiated and may vary according to the nature, extent, and complexity of the work required by the change. The allowability of the direct and indirect costs shall be determined in accordance with the Contract Cost Principles and Procedures for Commercial Firms in Part 31 of the Federal Acquisition Regulation (48 CFR 1-31), as implemented by HUD Handbook 2210.18, in effect on the date of this contract. The Contractor shall not be allowed a profit on the profit received by any subcontractor. Equitable adjustments for deleted work shall include a credit for profit and may include a credit for indirect costs. On proposals covering both increases and decreases in the amount of the contract, the application of indirect costs and profit shall be on the net-change in direct costs for the Contractor or subcontractor performing the work.

(g) The Contractor shall include in the proposal its request for time extension (if any), and shall include sufficient information and dates to demonstrate whether and to what extent the change will delay the completion of the contract in its entirety.

(h) The Contracting Officer shall act on proposals within 30 days after their receipt, or notify the Contractor of the date when such action will be taken.

(i) Failure to reach an agreement on any proposal shall be a dispute under the clause entitled Disputes herein. Nothing in this clause, however, shall excuse the Contractor from proceeding with the contract as changed.

(j) Except in an emergency endangering life or property, no change shall be made by the Contractor without a prior order from the Contracting Officer.

30. Suspension of Work

(a) The Contracting Officer may order the Contractor in writing to suspend, delay, or interrupt all or any part of the work of this contract for the period of time that the Contracting Officer determines appropriate for the convenience of the PHA.

(b) If the performance of all or any part of the work is, for an unreasonable period of time, suspended, delayed, or interrupted (1) by an act of the Contracting Officer in the administration of this contract, or (2) by the Contracting Officer's failure to act within the time specified (or within a reasonable time if not specified) in this contract an adjustment shall be made for any increase in the cost of performance of the contract (excluding profit) necessarily caused by such unreasonable suspension, delay, or interruption and the contract modified in writing accordingly. However, no adjustment shall be made under this clause for any suspension, delay, or interruption to the extent that performance would have been so suspended, delayed, or interrupted by any other cause, including the fault or negligence of the Contractor or for which any equitable adjustment is provided for or excluded under any other provision of this contract.

(c) A claim under this clause shall not be allowed (1) for any costs incurred more than 20 days before the Contractor shall have notified the Contracting Officer in writing of the act or failure to act involved (but this requirement shall not apply as to a claim resulting from a suspension order); and, (2) unless the claim, in an amount stated, is asserted in writing as soon as practicable after the termination of the suspension, delay, or interruption, but not later than the date of final payment under the contract.

31. Disputes

(a) "Claim," as used in this clause, means a written demand or written assertion by one of the contracting parties seeking, as a matter of right, the payment of money in a sum certain, the adjustment or interpretation of contract terms, or other relief arising under or relating to the contract. A claim arising under the contract, unlike a claim relating to the contract, is a claim that can be resolved under a contract clause that provides for the relief sought by the claimant. A voucher, invoice, or other routine request for payment that is not in dispute when submitted is not a claim. The submission may be converted to a claim by complying with the requirements of this clause, if it is disputed either as to liability or amount or is not acted upon in a reasonable time.

(b) Except for disputes arising under the clauses entitled Labor Standards - Davis Bacon and Related Acts, herein, all disputes arising under or relating to this contract, including any claims for damages for the alleged breach thereof which are not disposed of by agreement, shall be resolved under this clause.

(c) All claims by the Contractor shall be made in writing and submitted to the Contracting Officer for a written decision. A claim by the PHA against the Contractor shall be subject to a written decision by the Contracting Officer.

(d) The Contracting Officer shall, within 60 (unless otherwise indicated) days after receipt of the request, decide the claim or notify the Contractor of the date by which the decision will be made.

(e) The Contracting Officer's decision shall be final unless the Contractor (1) appeals in writing to a higher level in the PHA in accordance with the PHA's policy and procedures, (2) refers the appeal to an independent mediator or arbitrator, or (3) files suit in a court of competent jurisdiction. Such appeal must be made within (30 unless otherwise indicated) days after receipt of the Contracting Officer's decision.

(f) The Contractor shall proceed diligently with performance of this contract, pending final resolution of any request for relief, claim, appeal, or action arising under or relating to the contract, and comply with any decision of the Contracting Officer.

32. Default

(a) If the Contractor refuses or fails to prosecute the work, or any separable part thereof, with the diligence that will insure its completion within the time specified in this contract, or any extension thereof, or fails to complete said work within this time, the Contracting Officer may, by written notice to the Contractor, terminate the right to

proceed with the work (or separable part of the work) that has been delayed. In this event, the PHA may take over the work and complete it, by contract or otherwise, and may take possession of and use any materials, equipment, and plant on the work site necessary for completing the work. The Contractor and its sureties shall be liable for any damage to the PHA resulting from the Contractor's refusal or failure to complete the work within the specified time, whether or not the Contractor's right to proceed with the work is terminated. This liability includes any increased costs incurred by the PHA in completing the work.

(b) The Contractor's right to proceed shall not be terminated or the Contractor charged with damages under this clause if—

(1) The delay in completing the work arises from unforeseeable causes beyond the control and without the fault or negligence of the Contractor. Examples of such causes include (i) acts of God, or of the public enemy, (ii) acts of the PHA or other governmental entity in either its sovereign or contractual capacity, (iii) acts of another contractor in the performance of a contract with the PHA, (iv) fires, (v) floods, (vi) epidemics, (vii) quarantine restrictions, (viii) strikes, (ix) freight embargoes, (x) unusually severe weather, or (xi) delays of subcontractors or suppliers at any tier arising from unforeseeable causes beyond the control and without the fault or negligence of both the Contractor and the subcontractors or suppliers; and

(2) The Contractor, within days (10 days unless otherwise indicated) from the beginning of such delay (unless extended by the Contracting Officer) notifies the Contracting Officer in writing of the causes of delay. The Contracting Officer shall ascertain the facts and the extent of the delay. If, in the judgment of the Contracting Officer, the findings of fact warrant such action, time for completing the work shall be extended by written modification to the contract. The findings of the Contracting Officer shall be reduced to a written decision which shall be subject to the provisions of the Disputes clause of this contract.

(c) If, after termination of the Contractor's right to proceed, it is determined that the Contractor was not in default, or that the delay was excusable, the rights and obligations of the parties will be the same as if the termination had been for convenience of the PHA.

33. Liquidated Damages

(a) If the Contractor fails to complete the work within the time specified in the contract, or any extension, as specified in the clause entitled Default of this contract, the Contractor shall pay to the PHA as liquidated damages, the sum of $ _____ Contracting Officer insert amount] for each day of delay. If different completion dates are specified in the contract for separate parts or stages of the work, the amount of liquidated damages shall be assessed on those parts or stages which are delayed. To the extent that the Contractor's delay or nonperformance is excused under another clause in this contract, liquidated damages shall not be due the PHA. The Contractor remains liable for damages caused other than by delay.

(b) If the PHA terminates the Contractor's right to proceed, the resulting damage will consist of liquidated damages until such reasonable time as may be required for final completion of the work together with any increased costs occasioned the PHA in completing the work.

(c) If the PHA does not terminate the Contractor's right to proceed, the resulting damage will consist of liquidated damages until the work is completed or accepted.

34. Termination for Convenience

(a) The Contracting Officer may terminate this contract in whole, or in part, whenever the Contracting Officer determines that such termination is in the best interest of the PHA. Any such termination shall be effected by delivery to the Contractor of a Notice of Termination specifying the extent to which the performance of the work under the contract is terminated, and the date upon which such termination becomes effective.

(b) If the performance of the work is terminated, either in whole or in part, the PHA shall be liable to the Contractor for reasonable and proper costs resulting from such termination upon the receipt by the PHA of a properly presented claim setting out in detail: (1) the total cost of the work performed to date of termination less the total amount of contract payments made to the Contractor; (2) the cost (including reasonable profit) of settling and paying claims under subcontracts and material orders for work performed and materials and supplies delivered to the site, payment for which has not been made by the PHA to the Contractor or by the Contractor to the subcontractor or supplier; (3) the cost of preserving and protecting the work already performed until the PHA or assignee takes possession thereof or assumes responsibility therefore; (4) the actual or estimated cost of legal and accounting services reasonably necessary to prepare and present the termination claim to the PHA; and (5) an amount constituting a reasonable profit on the value of the work performed by the Contractor.

(c) The Contracting Officer will act on the Contractor's claim within days (60 days unless otherwise indicated) of receipt of the Contractor's claim.

(d) Any disputes with regard to this clause are expressly made subject to the provisions of the Disputes clause of this contract.

35. Assignment of Contract

The Contractor shall not assign or transfer any interest in this contract; except that claims for monies due or to become due from the PHA under the contract may be assigned to a bank, trust company, or other financial institution. Such assignments of claims shall only be made with the written concurrence of the Contracting Officer. If the Contractor is a partnership, this contract shall inure to the benefit of the surviving or remaining member(s) of such partnership as approved by the Contracting Officer.

36. Insurance

(a) Before commencing work, the Contractor and each subcontractor shall furnish the PHA with certificates of insurance showing the following insurance is in force and will insure all operations under the Contract:

(1) Workers' Compensation, in accordance with state or Territorial Workers' Compensation laws.

(2) Commercial General Liability with a combined single limit for bodily injury and property damage of not less than $ _____ [Contracting Officer insert amount]

per occurrence to protect the Contractor and each subcontractor against claims for bodily injury or death and damage to the property of others. This shall cover the use of all equipment, hoists, and vehicles on the site(s) not covered by Automobile Liability under (3) below. If the Contractor has a "claims made" policy, then the following additional requirements apply: the policy must provide a "retroactive date" which must be on or before the execution date of the Contract; and the extended reporting period may not be less than five years following the completion date of the Contract.

(3) Automobile Liability on owned and non -owned motor vehicles used on the site(s) or in connection therewith for a combined single limit for bodily injury and property damage of not less than $ _____ [Contracting Officer insert amount] per occurrence.

(b) Before commencing work, the Contractor shall furnish the PHA with a certificate of insurance evidencing that Builder's Risk (fire and extended coverage) Insurance on all work in place and/or materials stored at the building site(s), including foundations and building equipment, is in force. The Builder's Risk Insurance shall be for the benefit of the Contractor and the PHA as their interests may appear and each shall be named in the policy or policies as an insured. The Contractor in installing equipment supplied by the PHA shall carry insurance on such equipment from the time the Contractor takes possession thereof until the Contract work is accepted by the PHA. The Builder's Risk Insurance need not be carried on excavations, piers, footings, or foundations until such time as work on the superstructure is started. It need not be carried on landscape work. Policies shall furnish coverage at all times for the full cash value of all completed construction, as well as materials in place and/or stored at the site(s), whether or not partial payment has been made by the PHA. The Contractor may terminate this insurance on buildings as of the date taken over for occupancy by the PHA. The Contractor is not required to carry Builder's Risk Insurance for modernization work which does not involve structural alterations or additions and where the PHA's existing fire and extended coverage policy can be endorsed to include such work.

(c) All insurance shall be carried with companies which are financially responsible and admitted to do business in the State in which the project is located. If any such insurance is due to expire during the construction period, the Contractor (including subcontractors, as applicable) shall not permit the coverage to lapse and shall furnish evidence of coverage to the Contracting Officer. All certificates of insurance, as evidence of coverage, shall provide that no coverage may be canceled or non-renewed by the insurance company until at least 30 days prior written notice has been given to the Contracting Officer.

37. Subcontracts

(a) Definitions. As used in this contract -

(1) "Subcontract" means any contract, purchase order, or other purchase agreement, including modifications and change orders to the foregoing, entered into by a subcontractor to furnish supplies, materials, equipment, and services for the performance of the prime contract or a subcontract.

(2) "Subcontractor" means any supplier, vendor, or firm that furnishes supplies, materials, equipment, or services to or for the Contractor or another subcontractor.

(b) The Contractor shall not enter into any subcontract with any subcontractor who has been temporarily denied participation in a HUD program or who has been suspended or debarred from participating in contracting programs by any agency of the United States Government or of the state in which the work under this contract is to be performed.

(c) The Contractor shall be as fully responsible for the acts or omissions of its subcontractors, and of persons either directly or indirectly employed by them as for the acts or omissions of persons directly employed by the Contractor.

(d) The Contractor shall insert appropriate clauses in all subcontracts to bind subcontractors to the terms and conditions of this contract insofar as they are applicable to the work of subcontractors.

(e) Nothing contained in this contract shall create any contractual relationship between any subcontractor and the PHA or between the subcontractor and HUD.

38. Subcontracting with Small and Minority Firms, Women's Business Enterprise, and Labor Surplus Area Firms

The Contractor shall take the following steps to ensure that, whenever possible, subcontracts are awarded to small business firms, minority firms, women's business enterprises, and labor surplus area firms:

(a) Placing qualified small and minority businesses and women's business enterprises on solicitation lists;

(b) Ensuring that small and minority businesses and women's business enterprises are solicited whenever they are potential sources;

(c) Dividing total requirements, when economically feasible, into smaller tasks or quantities to permit maximum participation by small and minority businesses and women's business enterprises;

(d) Establishing delivery schedules, where the requirements of the contract permit, which encourage participation by small and minority businesses and women's business enterprises; and

(e) Using the services and assistance of the U.S. Small Business Administration, the Minority Business Development Agency of the U.S. Department of Commerce, and State and local governmental small business agencies.

39. Equal Employment Opportunity

During the performance of this contract, the Contractor/Seller agrees as follows:

(a) The Contractor/Seller shall not discriminate against any employee or applicant for employment because of of race color, religion, sex, sexual orientation, gender identity, disability, or national origin.

(b) The Contractor/Seller shall take affirmative action to ensure that applicants are employed, and that employees are treated during employment without regard to their race, color, religion, sex, sexual orientation, gender identity, disability, or national origin. Such action shall include, but not be limited to, (1) employment, (2) upgrading demotion, (4) transfer, (5) recruitment or recruitment advertising, (6) layoff or termination, (7) rates of pay or other forms of compensation, and (8) selection for training,including apprenticeship

(c) The Contractor/Seller agrees to post in conspicuous places available to employees and applicants for employment the notices to be provided by the Contracting Officer setting forth the provisions of this nondiscrimination clause.
(d) The Contractor/Seller shall, in all solicitations or advertisements for employees placed by or on behalf of the Contractor/Seller, state that all qualified applicants will receive consideration for employment without regard to race, color, religion, sex, or national origin.
(e) The Contractor/Seller shall send, to each labor union or representative of workers with which it has a collective bargaining agreement or other contract or understanding, the notice to be provided by the Contracting Officer advising the labor union or workers' representative of the Contractor's commitments under this clause, and post copies of the notice in conspicuous places available to employees and applicants for employment.
(f) The Contractor/Seller shall comply with Executive Order 11246, as amended, and the rules, regulations, and orders of the Secretary of Labor.
(g) The Contractor/Seller shall furnish all information and reports required by Executive Order 11246, as amended, Section 503 of the Rehabilitation Act of 1973, as amended, and by rules, regulations, and orders of the Secretary of Labor, or pursuant thereto. The Contractor/Seller shall permit

access to its books, records, and accounts by the Secretary of Labor for purposes of investigation to ascertain compliance with such rules, regulations, and orders.

(h) In the event of a that the Contractor/Seller is in noncompliance with the nondiscrimination clauses of this contract or with any of such rules, regulations, or orders, this contract may be canceled, terminated or suspended in whole or in part and the contractor/seller may be declared ineligible for further Government contracts in accordance with procedures authorized in Executive Order 11246 of September 24, 1965, and such other sanctions may be imposed and remedies invoked as provided in Executive Order 11246 of September 24, 1965, or by rule, regulation, or order of the Secretary of Labor, or as otherwise provided by law.

(i)The contractor/seller will include the provisions of paragraphs (a) through (h) in every subcontract or purchase order unless exempted by rules, regulations, or orders of the Secretary of Labor issued pursuant to section 204 of Executive Order 11246 of September 24, 1965, so that such provisions will be binding upon each sub[contractor/seller] or vendor. The [contractor/seller] will take such action with respect to any subcontract or purchase order as may be directed by the Secretary of Labor as a means of enforcing such provisions in cluding sanctions for noncompliance: Provided, however, that in the event the [contractor/seller] becomes involved in, or is threatened with, litigation with a subcontractor or vendor as a result of such direction, the [contractor/seller] may request the United States to enter into such litigation to protect the interests of the United States.

(j) Compliance with the requirements of this clause shall be to the maximum extent consistent with, but not in derogation of, compliance with section 7(b) of the Indian Self-Determination and Education Assistance Act and the Indian Preference clause of this contract.

40. Employment, Training, and Contracting Opportunities for Low-Income Persons, Section 3 of the Housing and Urban Development Act of 1968.

(a) The work to be performed under this contract is subject to the requirements of Section 3 of the Housing and Urban Development Act of 1968, as amended, 12 U.S.C. 1701u (section 3). The purpose of section 3 is to ensure that employment and other economic opportunities generated by HUD assistance or HUD-assisted projects covered by Section 3, shall, to the greatest extent feasible, be directed to low- and very low-income persons, particularly persons who are recipients of HUD assistance for housing.
(b) The parties to this contract agree to comply with HUD's regulations in 24 CFR Part 75, which implement Section 3. As evidenced by their execution of this contract, the parties to this contract certify that they are under no contractual or other impediment that would prevent them from complying with the Part 75 regulations.
(c) The contractor agrees to send to each labor organization or representative of workers with which the contractor has a collective bargaining agreement or other understanding, if any, a notice advising the labor organization or workers' representative of the contractor's commitments under this section 3 clause and will post copies of the notice in conspicuous places at the work site where both employees and applicants for training and employment positions can see the notice. The notice shall describe the Section 3 prioritization requirements and shall state the minimum percentages of labor hour requirements established in the Benchmark Notice (FR-6085-N-04).
(d) The contractor agrees to include this section 3 clause in every subcontract subject to compliance with regulations in 24 CFR Part 75, and agrees to take appropriate action, as provided in an applicable provision of the subcontract or in this section 3 clause, upon a finding that the subcontractor is in violation of the regulations in 24 CFR Part 75. The contractor will not subcontract with any subcontractor where the contractor has notice or knowledge that the subcontractor has been found in violation of the regulations in 24 CFR Part 75.
(e) Noncompliance with HUD's regulations in 24 CFR Part 75 may result in sanctions, termination of this contract for default, and debarment or suspension from future HUD assisted contracts.
(f) Contracts, subcontracts, grants, or subgrants subject to Section 7(b) of the Indian Self-Determination and Education Assistance Act (25 U.S.C. 5307(b)) or subject to tribal preference requirements as authorized under 101(k) of the Native American Housing Assistance and Self-Determination Act (25 U.S.C. 4111(k)) must provide preferences in employment, training, and business opportunities to Indians and Indian organizations, and are therefore not subject to the requirements of 24 CFR Part 75.

41. Interest of Members of Congress

No member of or delegate to the Congress of the United States of America shall be admitted to any share or part of this contract or to any benefit that may arise therefrom.

42. Interest of Members, Officers, or Employees and Former Members, Officers, or Employees

No member, officer, or employee of the PHA, no member of the governing body of the locality in which the project is situated, no member of the governing body of the locality in which the PHA was activated, and no other public official of such locality or localities who exercises any functions or responsibilities with respect to the project, shall, during his or her tenure, or for one year thereafter, have any interest, direct or indirect, in this contract or the proceeds thereof.

43. Limitations on Payments made to Influence Certain Federal Financial Transactions

(a) The Contractor agrees to comply with Section 1352 of Title 31, United States Code which prohibits the use of Acts Federal appropriated funds to pay any person for influencing or attempting to influence an officer or employee of any agency, a Member of Congress, and officer or employee of Congress, or an employee of a Member of Congress in connection with any of the following covered Federal actions: the awarding of any Federal contract; the making of any Federal grant; the making of any Federal loan; the entering into of any cooperative agreement; or the modification of any Federal contract, grant, loan, or cooperative agreement.

(b) The Contractor further agrees to comply with the requirement of the Act to furnish a disclosure (OMB Standard Form LLL, Disclosure of Lobbying Activities) if any funds other than Federal appropriated funds (including profit or fee received under a covered Federal transaction) have been paid, or will be paid, to any person for influencing or attempting to influence an officer or employee of any agency, a Member of Congress, an officer or employee of Congress, or an employee of a Member of Congress in connection with a Federal contract, grant, loan, or cooperative agreement.

44. Royalties and Patents

The Contractor shall pay all royalties and license fees. It shall defend all suits or claims for infringement of any patent rights and shall save the PHA harmless from loss on account thereof; except that the PHA shall be responsible for all such loss when a particular design, process or the product of a particular manufacturer or manufacturers is specified and the Contractor has no reason to believe that the specified design, process, or product is an infringement. If, however, the Contractor has reason to believe that any design, process or product specified is an infringement of a patent, the Contractor shall promptly notify the Contracting Officer. Failure to give such notice shall make the Contractor responsible for resultant loss.

45. Examination and Retention of Contractor's Records

(a) The PHA, HUD, or Comptroller General of the United States, or any of their duly authorized representatives shall, until 3 years after final payment under this contract, have access to and the right to examine any of the Contractor's directly pertinent books, documents, papers, or other records involving transactions related to this contract for the purpose of making audit, examination, excerpts, and transcriptions.

(b) The Contractor agrees to include in first-tier subcontracts under this contract a clause substantially the same as paragraph (a) above. "Subcontract," as used in this clause, excludes purchase orders not exceeding $10,000.

(c) The periods of access and examination in paragraphs (a) and (b) above for records relating to (1) appeals under the Disputes clause of this contract, (2) litigation or settlement of claims arising from the performance of this contract, or (3) costs and expenses of this contract to which the PHA, HUD, or Comptroller General or any of their duly authorized representatives has taken exception shall continue until disposition of such appeals, litigation, claims, or exceptions.

46. Labor Standards - Davis-Bacon and Related

If the total amount of this contract exceeds $2,000, the Federal labor standards set forth in the clause below shall apply to the development or construction work to be performed under the contract.

(a) Minimum Wages.

(1) All laborers and mechanics employed under this contract in the development or construction of the project(s) involved will be paid unconditionally and not less often than once a week, and without subsequent deduction or rebate on any account (except such payroll deductions as are permitted by regulations issued by the Secretary of Labor under the Copeland Act (29 CFR Part 3)), the full amount of wages and bona fide fringe benefits (or cash equivalents thereof) due at time of payment computed at rates not less than those contained in the wage determination of the Secretary of Labor which is attached hereto and made a part hereof, regardless of any contractual relationship which may be alleged to exist between the Contractor and such laborers and mechanics. Contributions made or costs reasonably anticipated for bona fide fringe benefits under Section 1(b)(2) of the Davis-Bacon Act on behalf of laborers or mechanics are considered wages paid to such laborers or mechanics, subject to the provisions of 29 CFR 5.5(a)(1)(iv); also, regular contributions made or costs incurred for more than a weekly period (but not less often than quarterly) under plans, funds, or programs which cover the regular weekly period, are deemed to be constructively made or incurred during such weekly period. Such laborers and mechanics shall be paid the appropriate wage rate and fringe benefits in the wage determination for the classification of work actually performed, without regard to skill, except as provided in 29 CFR 5.5(a)(4). Laborers or mechanics performing work in more than one classification may be compensated at the rate specified for each classification for the time actually worked therein; provided, that the employer's payroll records accurately set forth the time spent in each classification in which work is performed. The wage determination (including any additional classification and wage rates conformed under 29 CFR 5.5(a)(1)(ii) and the Davis-Bacon poster (WH-1321) shall

be posted at all times by the Contractor and its subcontractors at the site of the work in a prominent and accessible place where it can be easily seen by the workers.

(2) (i) Any class of laborers or mechanics, including helpers, which is not listed in the wage determination and which is to be employed under the contract shall be classified in conformance with the wage determination. HUD shall approve an additional classification and wage rate and fringe benefits therefor only when all the following criteria have been met: (A) The work to be performed by the classification requested is not performed by a classification in the wage determination; and (B) The classification is utilized in the area by the construction industry; and (C) The proposed wage rate, including any bona fide fringe benefits, bears a reasonable relationship to the wage rates contained in the wage determination.

(ii) If the Contractor and the laborers and mechanics to be employed in the classification (if known), or their representatives, and HUD or its designee agree on the classification and wage rate (including the amount designated for fringe benefits where appropriate), a report of the action taken shall be sent by HUD or its designee to the Administrator of the Wage and Hour Division, Employee Standards Administration, U.S. Department of Labor, Washington, DC 20210. The Administrator, or an authorized representative, will approve, modify, or disapprove every additional classification action within 30 days of receipt and so advise HUD or its designee or will notify HUD or its designee within the 30-day period that additional time is necessary.

(iii) In the event the Contractor, the laborers or mechanics to be employed in the classification or their representatives, and HUD or its designee do not agree on the proposed classification and wage rate (including the amount designated for fringe benefits, where appropriate), HUD or its designee shall refer the questions, including the views of all interested parties and the recommendation of HUD or its designee, to the Administrator of the Wage and Hour Division for determination. The Administrator, or an authorized representative, will issue a determination within 30 days of receipt and so advise HUD or its designee or will notify HUD or its designee within the 30-day period that additional time is necessary.

(iv) The wage rate (including fringe benefits where appropriate) determined pursuant to subparagraphs (a)(2)(ii) or (iii) of this clause shall be paid to all workers performing work in the classification under this contract from the first day on which work is performed in classification.

(3) Whenever the minimum wage rate prescribed in the contract for a class of laborers or mechanics includes a fringe benefit which is not expressed as an hourly rate, the Contractor shall either pay the benefit as stated in the wage determination or shall pay another bona fide fringe benefit or an hourly cash equivalent thereof.

(4) If the Contractor does not make payments to a trustee or other third person, the Contractor may consider as part of the wages of any laborer or mechanic the amount of any costs reasonably anticipated in providing bona fide fringe benefits under a plan or program; provided, that the Secretary of Labor has found, upon the written request of the Contractor, that the applicable standards of the Davis-Bacon Act have been met. The Secretary of Labor may require the Contractor to set aside in a separate account assets for the meeting of obligations under the plan or program.

(b) Withholding of funds. HUD or its designee shall, upon its own action or upon written request of an authorized representative of the Department of Labor, withhold or cause to be withheld from the Contractor under this contract or any other Federal contract with the same prime Contractor, or any other Federally-assisted contract subject to Davis-Bacon prevailing wage requirements, which is held by the same prime Contractor, so much of the accrued payments or advances as may be considered necessary to pay laborers and mechanics, including apprentices, trainees, and helpers, employed by the Contractor or any subcontractor the full amount of wages required by the contract. In the event of failure to pay any laborer or mechanic, including any apprentice, trainee, or helper, employed or working in the construction or development of the project, all or part of the wages required by the contract, HUD or its designee may, after written notice to the Contractor, take such action as may be necessary to cause the suspension of any further payment, advance, or guarantee of funds until such violations have ceased. HUD or its designee may, after written notice to the Contractor, disburse such amounts withheld for and on account of the Contractor or subcontractor to the respective employees to whom they are due.

(c) Payrolls and basic records.

(1) Payrolls and basic records relating thereto shall be maintained by the Contractor during the course of the work and preserved for a period of three years thereafter for all laborers and mechanics working in the construction or development of the project. Such records shall contain the name, address, and social security number of each such worker, his or her correct classification, hourly rates of wages paid (including rates of contributions or costs anticipated for bona fide fringe benefits or cash equivalents thereof of the types described in section 1(b)(2)(B) of the Davis-Bacon Act), daily and weekly number of hours worked, deductions made, and actual wages paid. Whenever the Secretary of Labor has found, under 29 CFR 5.5(a)(1)(iv), that the wages of any laborer or mechanic include the amount of costs reasonably anticipated in providing benefits under a plan or program described in section 1(b)(2)(B) of the Davis-Bacon Act, the Contractor shall maintain records which show that the commitment to provide such benefits is enforceable, that the plan or program is financially responsible, and that the plan or program has been communicated in writing to the laborers or mechanics affected, and records which show the costs anticipated or the actual cost incurred in providing such benefits. Contractors employing apprentices or trainees under approved programs shall maintain written evidence of the registration of apprenticeship programs and certification of trainee programs, the registration of the apprentices and trainees, and the ratios and wage rates prescribed in the applicable programs.

(2) (i) The Contractor shall submit weekly for each week in which any contract work is performed a copy of all payrolls to the Contracting Officer for transmission to HUD or its designee. The payrolls submitted shall set out accurately and completely all of the information required to be maintained under subparagraph (c)(1) of this clause. This information may be submitted in any form desired. Optional Form WH-347 (Federal Stock Number 029-005-00014-1) is available for this purpose and may be purchased from the Superintendent of Documents, U.S. Government Printing Office, Washington, D.C. 20402. The Contractor is responsible for the submission of copies of payrolls by all subcontractors. (Approved by the Office of Management and Budget under OMB Control Number 1214-0149.)

(ii) Each payroll submitted shall be accompanied by a "Statement of Compliance," signed by the Contractor or subcontractor or his or her agent who pays or supervises the payment of the persons employed under the contract and shall certify the following:

(A) That the payroll for the payroll period contains the information required to be maintained under paragraph (c) (1) of this clause and that such information is correct and complete;

(B) That each laborer or mechanic (including each helper, apprentice, and trainee) employed on the contract during the payroll period has been paid the full weekly wages earned, without rebate, either directly or indirectly, and that no deductions have been made either directly or indirectly from the full wages earned, other than permissible deductions as set forth in 29 CFR Part 3; and

(C) That each laborer or mechanic has been paid not less than the applicable wage rates and fringe benefits or cash equivalents for the classification of work performed, as specified in the applicable wage determination incorporated into the contract.

(iii) The weekly submission of a properly executed certification set forth on the reverse side of Optional Form WH-347 shall satisfy the requirements for submission of the "Statement of Compliance" required by subparagraph (c)(2)(ii) of this clause.

(iv) The falsification of any of the above certifications may subject the Contractor or subcontractor to civil or criminal prosecution under Section 1001 of Title 18 and Section 3729 of Title 31 of the United States Code.

(3) The Contractor or subcontractor shall make the records required under subparagraph (c)(1) available for inspection, copying, or transcription by authorized representatives of HUD or its designee, the Contracting Officer, or the Department of Labor and shall permit such representatives to interview employees during working hours on the job. If the Contractor or subcontractor fails to submit the required records or to make them available, HUD or its designee may, after written notice to the Contractor, take such action as may be necessary to cause the suspension of any further payment, advance, or guarantee of funds. Furthermore, failure to submit the required records upon request or to make such records available may be grounds for debarment action pursuant to 29 CFR 5.12.

(d) (1) Apprentices. Apprentices will be permitted to work at less than the predetermined rate for the work they performed when they are employed pursuant to and individually registered in a bona fide apprenticeship program registered with the U.S. Department of Labor, Employment and Training Administration, Office of Apprenticeship and Training, Employer and Labor Services (OATELS), or with a State Apprenticeship Agency recognized by OATELS, or if a person is employed in his or her first 90 days of probationary employment as an apprentice in such an apprenticeship program, who is not individually registered in the program, but who has been certified by OATELS or a State Apprenticeship Agency (where appropriate) to be eligible for probationary employment as an apprentice. The allowable ratio of apprentices to journeymen on the job site in any craft classification shall not be greater than the ratio permitted to the Contractor as to the entire work force under the registered program. Any worker listed on a payroll at an apprentice wage rate, who is not registered or otherwise employed as stated in this paragraph, shall be paid not less than the applicable wage rate on the wage determination for the classification of work actually performed. In addition, any apprentice performing work on the job site in excess of the ratio permitted under the registered program shall be paid not less than the applicable wage rate on the wage determination for the work actually performed. Where a contractor is performing construction on a project in a locality other than that in which its program is registered, the ratios and wage rates (expressed in percentages of the journeyman's hourly rate) specified in the Contractor's or subcontractor's registered program shall be observed. Every apprentice must be paid at not less than the rate specified in the registered program for the apprentice's level of progress, expressed as a percentage of the journeyman hourly rate specified in the applicable wage determination. Apprentices shall be paid fringe benefits in accordance with the provisions of the apprenticeship program. If the apprenticeship program does not specify fringe benefits, apprentices must be paid the full amount of fringe benefits listed on the wage determination for the applicable classification. If the Administrator of the Wage and Hour Division determines that a different practice prevails for the applicable apprentice classification, fringes shall be paid in accordance with that determination. In the event OATELS, or a State Apprenticeship Agency recognized by OATELS, withdraws approval of an apprenticeship program, the Contractor will no longer be permitted to utilize apprentices at less than the applicable predetermined rate for the work performed until an acceptable program is approved.

(2) Trainees. Except as provided in 29 CFR 5.16, trainees will not be permitted to work at less than the predetermined rate for the work performed unless they are employed pursuant to and individually registered in a program which has received prior approval, evidenced by formal certification by the U.S. Department of Labor, Employment and Training Administration. The ratio of trainees to journeymen on the job site shall not be greater than permitted under

the plan approved by the Employment and Training Administration. Every trainee must be paid at not less than the rate specified in the approved program for the trainee's level of progress, expressed as a percentage of the journeyman hourly rate specified in the applicable wage determination. Trainees shall be paid fringe benefits in accordance with the provisions of the trainee program. If the trainee program does not mention fringe benefits, trainees shall be paid the full amount of fringe benefits listed in the wage determination unless the Administrator of the Wage and Hour Division determines that there is an apprenticeship program associated with the corresponding journeyman wage rate in the wage determination which provides for less than full fringe benefits for apprentices. Any employee listed on the payroll at a trainee rate who is not registered and participating in a training plan approved by the Employment and Training Administration shall be paid not less than the applicable wage rate in the wage determination for the classification of work actually performed. In addition, any trainee performing work on the job site in excess of the ratio permitted under the registered program shall be paid not less than the applicable wage rate in the wage determination for the work actually performed. In the event the Employment and Training Administration withdraws approval of a training program, the Contractor will no longer be permitted to utilize trainees at less than the applicable predetermined rate for the work performed until an acceptable program is approved.

(3) Equal employment opportunity. The utilization of apprentices, trainees, and journeymen under this clause shall be in conformity with the equal employment opportunity requirements of Executive Order 11246, as amended, and 29 CFR Part 30.

(e) Compliance with Copeland Act requirements. The Contractor shall comply with the requirements of 29 CFR Part 3, which are hereby incorporated by reference in this contract.

(f) Contract termination; debarment. A breach of this contract clause may be grounds for termination of the contract and for debarment as a Contractor and a subcontractor as provided in 29 CFR 5.12.

(g) Compliance with Davis-Bacon and related Act requirements. All rulings and interpretations of the Davis-Bacon and related Acts contained in 29 CFR Parts 1, 3, and 5 are herein incorporated by reference in this contract.

(h) Disputes concerning labor standards. Disputes arising out of the labor standards provisions of this clause shall not be subject to the general disputes clause of this contract. Such disputes shall be resolved in accordance with the procedures of the Department of Labor set forth in 29 CFR Parts 5, 6, and 7. Disputes within the meaning of this clause include disputes between the Contractor (or any of its subcontractors) and the PHA, HUD, the U.S. Department of Labor, or the employees or their representatives.

(i) Certification of eligibility.

(1) By entering into this contract, the Contractor certifies that neither it (nor he or she) nor any person or firm who has an interest in the Contractor's firm is a person or firm ineligible to be awarded contracts by the United States Government by virtue of section 3(a) of the Davis-Bacon Act or 29 CFR 5.12(a)(1).

(2) No part of this contract shall be subcontracted to any person or firm ineligible for award of a United States Government contract by virtue of section 3(a) of the Davis-Bacon Act or 29 CFR 5.12(a)(1).

(3) The penalty for making false statements is prescribed in the U. S. Criminal Code, 18 U.S.C. 1001.

(j) Contract Work Hours and Safety Standards Act. As used in this paragraph, the terms "laborers" and "mechanics" include watchmen and guards.

(1) Overtime requirements. No contractor or subcontractor contracting for any part of the contract work which may require or involve the employment of laborers or mechanics, including watchmen and guards, shall require or permit any such laborer or mechanic in any workweek in which the individual is employed on such work to work in excess of 40 hours in such workweek unless such laborer or mechanic receives compensation at a rate not less than one and one-half times the basic rate of pay for all hours worked in excess of 40 hours in such workweek.

(2) Violation; liability for unpaid wages; liquidated damages. In the event of any violation of the provisions set forth in subparagraph (j)(1) of this clause, the Contractor and any subcontractor responsible therefor shall be liable for the unpaid wages. In addition, such Contractor and subcontractor shall be liable to the United States (in the case of work done under contract for the District of Columbia or a territory, to such District or to such territory), for liquidated damages. Such liquidated damages shall be computed with respect to each individual laborer or mechanic (including watchmen and guards) employed in violation of the provisions set forth in subparagraph (j)(1) of this clause, in the sum of $27 for each calendar day on which such individual was required or permitted to work in excess of the standard workweek of 40 hours without payment of the overtime wages required by provisions set forth in subparagraph (j)(1) of this clause. DOL posts current fines at: https://www.dol.gov/whd/govcontracts/cwhssa.htm#cmp

(3) Withholding for unpaid wages and liquidated damages. HUD or its designee shall upon its own action or upon written request of an authorized representative of the Department of Labor withhold or cause to be withheld, from any moneys payable on account of work performed by the Contractor or subcontractor under any such contract or any Federal contract with the same prime Contractor, or any other Federally-assisted contract subject to the Contract Work Hours and Safety Standards Act, which is held by the same prime Contractor, such sums as may be determined to be necessary to satisfy any liabilities of such Contractor or subcontractor for unpaid wages and liquidated damages as provided in the provisions set forth in subparagraph (j)(2) of this clause.

(k) Subcontracts. The Contractor or subcontractor shall insert in any subcontracts all the provisions contained in this clause, and such other clauses as HUD or its designee may by appropriate instructions require, and also a clause requiring the subcontractors to include these provisions in any lower tier subcontracts. The prime Contractor shall be responsible for the compliance by any subcontractor or lower tier subcontractor with all these provisions.

47. Non-Federal Prevailing Wage Rates

(a) Any prevailing wage rate (including basic hourly rate and any fringe benefits), determined under State or tribal law to be prevailing, with respect to any employee in any trade or position employed under the contract, is inapplicable to the contract and shall not be enforced against the Contractor or any subcontractor, with respect to employees engaged under the contract whenever such non-Federal prevailing wage rate exceeds:

(1) The applicable wage rate determined by the Secretary of Labor pursuant to the Davis-Bacon Act (40 U.S.C. 3141 et seq.) to be prevailing in the locality with respect to such trade;

(b) An applicable apprentice wage rate based thereon specified in an apprenticeship program registered with the U.S. Department of Labor (DOL) or a DOL-recognized State Apprenticeship Agency; or

(c) An applicable trainee wage rate based thereon specified in a DOL-certified trainee program.

48. Procurement of Recovered Materials.

(a) In accordance with Section 6002 of the Solid Waste Disposal Act, as amended by the Resource Conservation and Recovery Act, the Contractor shall procure items designated in guidelines of the Environmental Protection Agency (EPA) at 40 CFR Part 247 that contain the highest percentage of recovered materials practicable, consistent with maintaining a satisfactory level of competition. The Contractor shall procure items designated in the EPA guidelines that contain the highest percentage of recovered materials practicable unless the Contractor determines that such items: (1) are not reasonably available in a reasonable period of time; (2) fail to meet reasonable performance standards, which shall be determined on the basis of the guidelines of the National Institute of Standards and Technology, if applicable to the item; or (3) are only available at an unreasonable price.

( ) Paragraph (a) of this clause shall apply to items purchased under this contract where: (1) the Contractor purchases in excess of $10,000 of the item under this contract; or (2) during the preceding Federal fiscal year, the Contractor: (i) purchased any amount of the items for use under a contract that was funded with Federal appropriations and was with a Federal agency or a State agency or agency of a political subdivision of a State; and (ii) purchased a total of in excess of $10,000 of the item both under and outside that contract.

CONCORD DRIVE APARTMENTS

2950 & 2956 CONCORD DRIVE, OXNARD, CA 93036

CITY OF OXNARD HOUSING AUTHORITY
435 SOUTH D STREET - OXNARD, CA 93030

CONSTRUCTION NOTES

1. PROVIDE WORK AND MATERIALS IN ACCORDANCE WITH THE LATEST RULES AND REGULATIONS OF APPLICABLE STATE AND LOCAL CODES, LAWS, AND STATUES. NOTHING IN THE CONTRACT DOCUMENTS IS TO BE CONSTRUED AS REQUIRING OR PERMITTING WORK CONTRARY TO THESE CODES, LAWS AND STATUES.
2. CONTRACTOR IS RESPONSIBLE FOR MAINTAINING A PERMIT SET OF CONSTRUCTION DOCUMENTS, SPECIFICATIONS, AND ADDENDA ON SITE DURING ALL PHASES OF CONSTRUCTION FOR USE BY ALL TRADES AND SHALL PROVIDE ALL SUBCONTRACTORS WITH CURRENT CONSTRUCTION DOCUMENTS AS REQUESTED. ADDITIONALLY CONTRACTOR SHALL MAINTAIN ON SITE COPIES OF APPLICABLE CODES AND REFERENCE DOCUMENTS, OR HAVE DIRECT ACCESS VIA REMOTE COMPUTER AND/OR INTERNET ACCESS.
3. CONTRACTOR SHALL REVIEW ALL THE CONTRACT DOCUMENTS, THE PROJECT SITE AND BECOME FAMILIAR WITH THE SCOPE OF WORK AND INTENT OF THE CONTRACT DOCUMENTS. IT IS INCUMBENT UPON THE CONTRACTOR TO NOTIFY THE ARCHITECT IMMEDIATELY UPON DISCOVERING DISCREPANCIES OR CONFLICTS IN THE CONTRACT DOCUMENTS. DURING BIDDING, OBTAIN PROPER, WRITTEN CLARIFICATION OF THE DISCREPANCY, CONFLICT, OR UNCLEAR ITEM PRIOR TO SUBMISSION OF BIDS. DURING CONSTRUCTION, DO NOT PROCEED WITH DEMOLITION UNTIL THE DISCREPANCY OR CONFLICT IS RESOLVED.
4. EXAMINATION OF THE SITE AND PORTIONS THEREOF WHICH WILL AFFECT THIS WORK SHALL BE MADE IMMEDIATELY BY THE CONTRACTOR(S), WHO SHALL COMPARE IT WITH THE CONTRACT DOCUMENTS AND SATISFY THEMSELVES AS TO THE CONDITIONS UNDER WHICH WORK IS TO BE PERFORMED. CONTRACTOR(S) SHALL, AT SUCH TIME, CHECK LOCATIONS OF THE EXISTING STRUCTURES AND EQUIPMENT WHICH MAY AFFECT THE WORK. NO ALLOWANCE SHALL BE MADE FOR EXTRA EXPENSE TO WHICH MAY BE MAY BE INCURRED DUE TO FAILURE O NEGLECT ON THEIR PART TO MAKE SUCH EXAMINATION.
5. EACH CONTRACTOR SHALL BE RESPONSIBLE FOR REVIEWING ALL OF THE CONTRACT DOCUMENTS AS THEY RELATE TO THE CONTRACTOR'S WORK. IN ADDITION, EACH CONTRACTOR IS RESPONSIBLE TO COORDINATE THEIR OWNER WORK WITH HE WORK OF OTHER TRADES.
6. THE CONSTRUCTION DOCUMENTS ARE PROVIDED TO ILLUSTRATE THE DESIGN AND GENERAL TYPE OF CONSTRUCTION, MATERIALS, AND WORKMANSHIP THROUGHOUT. THE DOCUMENTS DO NOT ILLUSTRATE EVERY CONDITION. THE CONTRACTOR, IN ASSUMING RESPONSIBILITY FOR THE WORK INDICATED, SHALL COMPLY WITH THE DESIGN INTENT AS WELL AS THE LETTER IN WHICH THEY ARE PREPARED.
7. CONSTRUCTION DOCUMENTS ARE COMPLEMENTARY, AND WHAT IS CALLED FOR BY ANY WILL BE AS BINDING AS IF CALLED FOR BY ALL. ALL WORK SHOWN OR REFERRED TO ON ANY CONSTRUCTION DOCUMENT SHALL BE PROVIDED AS THOUGH ON ALL RELATED DOCUMENTS.
8. WORK LISTED, SHOWN, OR REASONABLY INFERRED ON ANY CONSTRUCTION DOCUMENT SHALL BE PROVIDED BY THE CONTRACTOR, EXCEPT WHERE NOTED OTHERWISE. THE GENERAL CONTRACTOR SHALL CLOSELY COORDINATE HIS WORK WITH THAT OF OTHER CONTRACTORS OR VENDORS AND OWNER TO ASSURE THAT SCHEDULES ARE MET AND THAT WORK IS DONE IN CONFORMANCE TO MANUFACTURER'S REQUIREMENTS.
9. UNLESS OTHERWISE NOTED, WORK SCOPE IS ASSUMED NEW UNLESS NOTED AS EXISTING.
10. THE USE OF THE WORD "PROVIDE" IN CONNECTION WITH ANY SCOPE DEFINED IN THE CONSTRUCTION DOCUMENTS IS INTENDED TO MEAN THAT SUCH SHALL BE FURNISHED, INSTALLED, AND CONNECTED, UNLESS OTHERWISE NOTED.
11. IT IS REQUIRED THAT ALL CONTRACTORS AND THEIR PERSONNEL ARE PROPERLY TRAINED AND COMPETENT TO CONSTRUCT AND OTHERWISE CARRY OUT THE INTENT OF THE WORK INCORPORATED INTO THE CONTRACT DOCUMENTS.
12. THE CONTRACT DOCUMENTS CONSIST OF THE COMPLETE DRAWINGS, PROJECT MANUAL, SPECIFICATIONS, REPORTS, BIDDING INFORMATION AND OTHER INFORMATION PREPARED BY THE ARCHITECT, IT'S CONSULTANTS OR THE CONSULTANTS HIRED BY THE OWNER. IN THE EVENT OF DISCREPANCIES OR CONFLICTS IN THE DOCUMENTS, INFORMATION IN THE SPECIFICATIONS SHALL TAKE PRECEDENCE OVER THE DRAWINGS, AND LARGE SCALE DRAWINGS SHALL TAKE PRECEDENCE OVER THE DRAWINGS, AND LARGE SCALE DRAWINGS SHALL TAKE PRECEDENCE OVER SMALLER SCALE DRAWINGS.
13. THE CONTRACTOR SHALL BE RESPONSIBLE FOR THE DEVELOPMENT, COORDINATION AND SAFE EXECUTION OF CONSTRICTION MEANS, METHODS, SHORING, AND PROCEDURES.
14. AT NO ADDITIONAL COST TO THE OWNER, CONTRACTOR SHALL CORRECT WORK INSTALLED IN CONFLICT WITH THE CONTRACT DOCUMENTS.
15. THE CONTRACTOR SHALL BE RESPONSIBLE FOR INITIATING, MAINTAINING AND SUPERVISING SAFETY PRECAUTIONS AND PROGRAMS IN CONNECTION WITH HIS WORK.
16. CONTRACTOR SHALL PROTECT AREA OF WORK AND NEW OR EXISTING MATERIALS AND FINISHES FROM DAMAGE WHICH MAY OCCUR FROM CONSTRUCTION, DEMOLITION, DUST, WATER, ETC…, AND SHALL PROVIDE AND MAINTAIN TEMPORARY BARRICADES OR ENCLOSURES AS REQUIRED TO PROTECT THE PUBLIC DURING THE PERIOD OF CONSTRUCTION. AT NO ADDITIONAL EXPENSE TO THE OWNER, THE CONTRACTOR SHALL REPAIR OR REPLACE DAMAGE TO NEW AND EXITING MATERIALS, FINISHES, STRUCTURES, AND EQUIPMENT TO THE SATISFACTION OF THE OWNER.
17. CONTRACTORS SHALL EXERCISE CONTROL OVER JOB CLEANING TO PREVENT ANY DIRT, DEBRIS, OR DUST FROM AFFECTING, IN ANY WAY, FINISHED WORK OR EXISTING TO REMAIN WORK OR CREATING A SAFETY HAZARD IN OR OUTSIDE JOBSITE.
18. ONLY APPROVED WORKING DRAWINGS, WITH THE STATEMENT "ISSUED FOR CONSTRUCTION" ON THE COVER SHEET, SHALL BE USED FOR CONSTRUCTION OF THIS PROJECT.
19. DIMENSIONS ON CONSTRUCTION DRAWINGS ARE TO FACE OF STUD WALL OR FACE OF CONCRETE, UNLESS OTHERWISE NOTED. CONTRACTOR SHALL NOT SCALE DRAWINGS. DIMENSIONS NOTED "(E)" MEANING EXISTING ARE TO BE FIELD VERIFIED PRIOR TO LAYING OUT WORK.
20. IN THE CASE OF DIMENSIONS NOTED AS "CLEAR" CONTRACTOR IS RESPONSIBLE FOR REVIEWING PLANS TO DETERMINE ACTUAL THICKNESS OF FINISHES AND MEASURE FROM OUTSIDE FACE OF WALL TO ADJACENT SURFACE.
21. CONTRACTOR SHALL LEAVE JOB SITE AND AFFECTED AREAS CLEAN AND IN AN ORDERLY MANNER READY FOR MOVE IN. THIS IS TO INCLUDE CLEANING OF THE INTERIOR AND EXTERIOR FACES OF NEW AND EXISTING GLASS.

SHEET INDEX

GENERAL	
G-000	COVER SHEET
1 G-001	CONDITIONS OF APPROVAL
STRUCTURAL	
S-1.0	GENERAL NOTES
S-1.1	GENERAL NOTES (CONT.)
S-2.0	FOUNDATION PLAN
S-2.1	FLOOR FRAMING
S-2.2	ROOF FRAMING PLAN
S-3.0	STRUCTURAL DETAILS
S-3.1	STRUCTURAL DETAILS
ARCHITECTURAL	
A-001	SITE PLAN
A-100	DEMO FLOOR PLANS - 1ST & 2ND
A-101	FLOOR PLANS - 1ST & 2ND
A-201	ELEVATIONS
A-301	BUILDING SECTIONS
A-401	LSV - KITCHENS
A-402	LSV - BATHROOM
A-501	SITE DETAILS
A-502	ACCESSIBLE DETAILS
A-503	ROOF, DOOR & WINDOW DETAILS
A-601	SCHEDULES
A-602	WALL LEGEND
1 A-701	MECHANICAL PRODUCT INFORMATION
MECHANICAL	
M-0	HVAC NOTES/DETAILS
M-1	HVAC PLAN
N-1	TITLE 24 CALCS
N-2	TITLE 24 CALCS
PLUMBING	
P-0	PLUMBING NOTES & DETAILS
P-1	PLUMBING PLAN
ELECTRICAL	
EC-001	GENERAL NOTES, SYMBOLS & DETAILS
EC-002	RESIDENTIAL LIGHTING COMPLIANCE FORMS
EC-003	ELECTRICAL SITE PLAN
EC-100	DEMO FLOOR PLANS - 1ST & 2ND
EC-101	ELECTRICAL FLOOR PLANS - 1ST & 2ND

SCOPE OF WORK

SECTION 504 DISABILITY COMPLIANT DESIGN AND MODIFICATION OF EXISTING 2 STORY 5-BEDROOM UNIT, CONVERT UNIT INTO A FIRST FLOOR ONE-BEDROOM ACCESSIBLE UNIT WITH ADDED AREA TO PROVIDE ADEQUATE BEDROOM SIZE; AND A 2-STORY TWO-BEDROOM UNIT NOT ACCESSIBLE BUT MODERNIZED. PROVIDE ONE-HOUR AND SOUND SEPARATION BETWEEN THE TWO UNITS.

PROPERTY & PROJECT INFORMATION

ZONE:
EXISTING: R-4-PD (HIGH RISE RESIDENTIAL - PLANNED DEVELOPMENT)
PROPOSED: R-4-PD (HIGH RISE RESIDENTIAL - PLANNED DEVELOPMENT)

ADDRESS:
2950 & 2956 CONCORD DRIVE, OXNARD, CALIFORNIA 93036

ASSESSOR'S PARCEL NUMBER:
221-0-064-185

APPROVALS REQUIRED:
B&S PERMITS

PROJECT DESCRIPTION

EXISTING BUILDING: Type V-B Not Sprinklered. No change for proposed T.I.
EXISTING OCCUPANCY GROUP: Group R-2 No change for proposed T.I.

CODE ENFORCEMENT JURISDICTION: CITY OF OXNARD - BUILDING AND SAFETY
ZONING JURISDICTION: CITY OF OXNARD - PLANNING DEPARTMENT

CODE	TITLE	EDITION	LOCAL	AMENDMENTS
Administrative	Bldg. Stnds. Admin Code	2019		
Building	California Bldg. Code	2019		
Access Compliance	California Bldg. Code	2019		
Mechanical	California Mech. Code	2019		
Electrical	California Electrical Code	2019		
Plumbing	California Plumbing Code	2019		
Fire Prevention	California Fire Code	2019	YES	
	State Fire Marshall Regs.	2017		
	NFPA 99	2018		
Zoning Code	CITY OF OXNARD			

PROJECT DIRECTORY

OWNER
City of Oxnard Housing Authority
435 South D Street
Oxnard, California, 93030
Housing Director: Emilio Ramirez
Phone: 805-385-8096
Fax: 805-385-7969
E-mail : housingdirector@oxnard.org
Project Manager: Fredi Contreras
Phone: 805-385-7887
Fax: 805-385-7969
E-mail: fredi.contreras@oxnard.org

ARCHITECT
Lauterbach & Associates Architects
Ilona S. Scott, Architect
License Number: C11881
300 Montgomery Avenue
Oxnard, California, 93036
Phone: 805-988-0912
Fax: 805-981-4510
E-Mail: Ilona.scott@la-arch.com

STRUCTURAL/ MECHANICAL/ PLUMBING ENGINEER
All Trade Engineering & Design
Shane Judd
License Numbers: C70991, M3463
17 E. High Street, Suite A
Moorpark, California 93021
Phone: 805-552-4000
E-mail: juddsalltrade@yahoo.com

ELECTRICAL ENGINEER
JMPE Electrical Engineering
John Maloney
License Number: E016083
627 Olive Street
Santa Barbara, California 93101
Phone: 805-569-9216
E-Mail: maloney@jmpe.net

VICINITY MAP

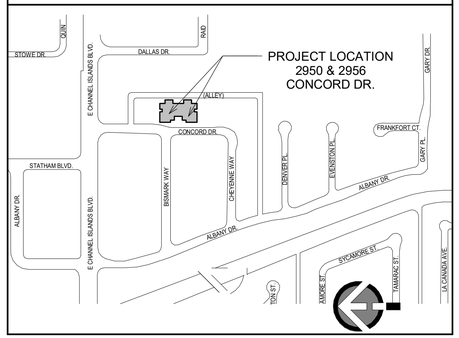

SITE ANALYSIS

SITE AREA: 1.07 AC :	46,609.20 SF	100.00%
BUILDING COVERAGE	13,962.22 SF	29.96%
PAVING AREA:	9,348.76 SF	20.06%
LANDSCAPE AREA:	23,289.22 SF	49.99%
INTERIOR YARD AREA:	14,222.10 SF	30.51%

EXISTING UNITS (RESIDENTIAL)
2-BDRM 1ST FL. 589.00 SF + 2ND FL 385.00 SF = 974.00 SF
3-BDRM 1ST FL. 717.39 SF + 2ND FL 437.40 SF = 1,154.79 SF
4-BDRM 1ST FL. 695.39 SF + 2ND FL 631.77 SF = 1,327.15 SF
5-BDRM 1ST FL. 945.81 SF + 2ND FL 687.77 SF = 1,633.58 SF

MODIFIED 5-BDRM UNITS
SPLIT AND ADDED TO 1ST FL 158.35 SF TO EACH:
1-BDRM 1ST FL (INCLUDING ADDED SF) 552.92 SF
2-BDRM 1ST FL 551.25 SF + 2ND FL 687.75 SF = 1,239.00 SF
EXISTING BEDROOMS: 72
BEDROOMS REMOVED: 4
REVISED TOTAL BEDROOMS: 68

PARKING ANALYSIS

PARKING EXISTING: 36 SPACES (PER 1970 COUNT)
PARKING PROVIDED: 31 SPACES (INCULDS 2 ACCESSIBLE)
EXISTING UNITS: 20 + ADDED 2 UNITS (FROM SPLIT)

TOTAL UNITS: 22

UNIT TYPE	NO. OF UNITS	SPACE REQUIRED
1-BDRM	2	2
2-BDRM	10	20
3-BDRM	4	8
4-BDRM	6	12
5-BDRM	0	0

TOTAL PARKING REQUIRED: 42 SPACES
CONSESSION REQUEST APPLICATION FOR MISSING PARKING SPACES

LAUTERBACH & ASSOCIATES
A R C H I T E C T S • I N C.
David C. Kesterson, Architect • Ilona Scott, Architect • Mark S. Pettit, Architect
300 MONTGOMERY AVENUE, OXNARD, CALIFORNIA 93036 | 805-988-0912 | FAX 805-981-4510 | www.la-arch.com

LICENSED ARCHITECT ILONA SCOTT No. C11881 Ren. 06/21 STATE OF CALIFORNIA

CONCORD DRIVE APARTMENTS
2950 & 2956 CONCORD DRIVE
OXNARD, CA, 93036

CITY OF OXNARD HOUSING AUTHORITY
435 S. D STREET
OXNARD, CALIFORNIA 93030

NO	DESCRIPTION	DATE
1	PLAN CHECK SUBMITTAL	08/05/2020

ISSUE

JOB NO. 20-190708

DRAWN BY: TJL
CHECKED BY: ISS
PROJECT MANAGER: ISS
PRINT DATE: 3/28/2023 1:14:01 PM

COVER SHEET

G-000

THESE DRAWINGS AND SPECIFICATIONS ARE THE PROPERTY AND COPYRIGHT OF LAUTERBACH & ASSOCIATES. ALL RIGHTS RESERVED, AND SHALL NOT BE USED ON ANY OTHER WORK OR PROJECT EXCEPT BY WRITTEN AGREEMENT WITH LAUTERBACH & ASSOCIATES. WRITTEN DIMENSIONS SHALL TAKE PRECEDENCE OVER SCALED DIMENSIONS AND SHALL BE VERIFIED ON THE JOB SITE. ANY DISCREPANCY SHALL BE BROUGHT TO THE NOTICE OF LAUTERBACH & ASSOCIATES PRIOR TO COMMENCEMENT OF ANY WORK.

G:\2019 Projects\20-190708 City of Oxnard-Set 4-Concord\Drawings\Architectural\2950 & 2956 Concord Drive - CD (Site and Elevs).rvt

Community Development Department
Planning Division
214 South C Street
Oxnard, California 93030
(805) 385-7858
Fax (805) 385-7417

CITY OF OXNARD CALIFORNIA

March 27, 2023

Anne Randall, Project Manager
Lauterbach & Associates Architects, Inc.
300 Montgomery Avenue, Unit C
Oxnard, CA 93036

Subject: Project Name: Concord Unit Improvements; Planning and Zoning Permit Nos. 23-140-06 (Minor Modification to Planned Development Permit No. 132) and 23-535-01 (Density Bonus); Concord Drive Apartments at 2950, 2956 Concord Drive *(APN: 221-0-064-185)*

The City of Oxnard has reviewed your request to modify the above-referenced permit and ministerial approval of a Density Bonus. The request includes the conversion of two existing 5-bedroom units into a pair of 1-bedroom units & 2-bedroom units to increase the total unit count from 20 to 22, a 158-square foot addition for two units, ADA parking upgrades resulting in the loss of 2 parking spaces, and a Density Bonus concession (PZ No. 23-535-01) to reduce the required parking in the site to 31.

Existing Land Use: The existing development currently contains five 4,257 square foot apartment buildings with 20 residential townhome units, 33 parking spaces, and 14,222 square-feet of open space on a 1.07-acre project site.

General Plan & Zoning Conformity: The 2030 General Plan land use designation on the subject property is Residential Medium High (RMH) and the Zoning designation is High Rise Residential Zone (R-4 PD). The General Plan and Zoning Designation both allow for the existing multi-family residential development.

Background: The project was originally built in the 1970's by a private developer as market-rated townhomes in accordance with the R-4 development standards. The Planned Development Permit No. 132 allowed the construction of 20 multi-family dwelling units with 36 parking spots. Changes to the site over time led to changes to the parking configuration and number. These include the installation of a second trash enclosure and a ramp to comply with the requirements of the Americans with Disability Act. The changes resulted in a net loss of 3 parking spots thus leaving 33 spaces onsite.

Environmental Determination: In accordance with Section 15301 of the California Environmental Quality Act (CEQA) Guidelines, projects involving "existing facilities where negligible or no expansion of use" may be found to be exempt from the requirements of CEQA. The project consists of improvements to an existing apartment development. The improvement will occur within the existing developed area of the complex. The additional units will be within the existing building footprint with the exception of the small 158 square foot additions.

Furthermore, the site has no habitat value for endangered, rare, or threatened species; is adequately served by public utilities and services, and will have no significant impacts on traffic, noise, air quality, or water. Therefore, Staff has determined that there is no substantial evidence that the project may have a significant effect on the environment.

Analysis: The project consists of minor changes to the existing residential development. Subject to the approval of a Density Bonus Permit the project will continue to comply with the requirements of the R-4 zoning district, as shown in the table below.

DEVELOPMENT STANDARD	REQUIREMENT	PROPOSED	COMPLIES?
Max. building height 16-73	4 stories not to exceed 45 feet from top of curb; SUP may allow upto11 stories or 100'	2 stories (Approximately 25 feet) - No Change	Existing
Density 16-74	1 unit per 1,500 square feet lot area. 46,609/1,500 = 31 unit maximum Any lot with an average width between 50 and 65' shall comply with the R3 zone standards. No more than 2 du on any lot with an average width between 40'-50' or with an area between 4,000 and 5,000 sqft; No more than 1 du on any lot with an average width less than 40' or an area less than 4,000 sqft.	22 units	Yes
Front yard 16-75	20 feet; 15 feet if access is provided from the alley; 30 feet when abutting designated scenic corridors, per CD-9.4 of the 2030 General Plan.	16 feet (Access provided from the alley)	Yes
Side yard 16-76	5 feet for 1 & 2 stories; shall be increased 2.5' for each story over 2.	5 feet minimum (No Change)	Existing
Street side yard 16-76	Need not exceed 10'	N/A	N/A
Rear yard 16-77 (A)	5 feet for 1 and 2 story buildings and be increase 2.5' for each story over two. Street rear yards shall not exceed 10'	15 feet (No Change)	Existing

Accessory Building 16-67 (B)	May be located in RY setback if the bldg is 6' from the nearest part of the main bldg, is one story in height.	N/A	N/A
Interior yard space 16-78	30% of the lot area, with min. dimension of 15' x 15'. 25% of required IYS may be provided by deck space if minimum 10' x 10' and 200 square feet and directly accessible from the units served. Areas must be open from ground to sky (see exceptions 16-304-16-307).May not include vehicle parking or circulation areas. .	13,936 sq. ft. (30.51%)	Yes
Parking spaces Resident 16-622	1 space in a garage for each 1-bedroom unit, and 2 spaces in a garage for each unit with 2 -5 bedrooms. 3 garage spaces for 6 bedrooms; 4 garage spaces for 7 bedrooms, 5 garage spaces for 8+ bedrooms.	31 spaces	Yes, subject to density bonus concession
Parking spaces Visitor 16-622	For 1st 30 units, 1 visitor space for each unit, and 0.5 visitor spaces per unit thereafter.	None	Yes, subject to density bonus concession
Fences/hedges - front yard 16-308	Must be at least 50% open, and may not exceed 42 inches. Or if a solid wall, then may not exceed 18 inches.	No Fence	Yes
Fences/hedges - side & rear yards 16-309	Not to exceed 7 feet in height.	No Fence	Yes
Parking landscaping 16-641	10-foot wide strip along any street or alley. 5% of parking area. For every 10 spaces, 9 foot finger w/2 trees	No parking landscaping provided parking spaces accessed directly from the alley. No change.	Existing
ATTACHED DWELLING UNIT STANDARDS APPLIES TO PROJECTS OF 6 OR MORE UNITS			
Min. Dwelling Size 16-362(A)	One bedroom: 450 sq.ft Two bedroom: 800 sq.ft	Minimum 1-bedroom Size - 552 Sq. Ft. Minimum 2-bedroom Size - 974 Sq.Ft.	Yes

Building Separation 16-362 (B)	Equal to the height of the taller structured	10-feet (No Change)	Existing
Recreation Facilities (12 units or more only) 16-362 (C)	Include at least one of the following: Swimming pool, spa, tennis, basketball, or volleyball courts, BBQ/picnic area, recreation building, exercise course, children's play equipment, or other's as approved by PC	None (No Change)	Existing
Open Area (12 units or more) 16-362 (D)	One landscape area of not less than 2,500 sq.ft. with minimum dimension of not less than 35'	One at 4,511 Sq. Ft	Yes
Distance to garage from DU 16-362 (E)	75'	N/A	N/A
Balconies & Patios 16-362 (F)	All 2nd story dwelling units shall have at least one patio or balcony having a minimum dimension of 10'	All units have private open space.	Yes
Balcony Enclosure 16-362 (G)	All balconies and patios shave have railings or walls which provide at least 50% enclosure	Private space is fenced	Yes
Storage Areas 16-362(H)	Each unit shall have a storage area of at least 225 cubic feet. Can't intrude into the minimum garage dimensions	No Change	Yes
Garages 16-362(I)	Automatic garage door openers and architectural treatment or detail	N/A	N/A
Utility Meters 16-362 (J)	Wall mounted meters shall be screened or integrated into the building design	No Change	Existing
Refuse Enclosures 16-362 (K)	Designed to reflect the major design elements or details of the residential units & provide ped access.	No Change	Existing

The Planned Development Permit entitled the project site to consist of 20 units and 36 parking spaces. As noted in the background section above, as the result of various improvements made over the subsequent years, the site currently contains 33 parking spaces. By dividing the two 5-bedroom units into 2 pairs of 1-bedroom units and 2-bedroom units, the parking requirements for the site increase by 4 spaces (2 spaces for the 1-bedroom units and 2 visitor spaces). Additionally, as required under the California Building Code the site is required to provide ADA spaces due to the site upgrades. These ADA parking spaces necessitate the removal of 2 parking spaces to allow for the ADA loading spaces, thereby reducing the existing parking count from 33 spaces to 31 spaces. The applicant has requested a density bonus (PZ 23-535-01) concession to allow for the reduction of City Parking requirements to 31 spaces.

As noted above, the Project includes an administrative request for a concession pursuant Section 65915(d) of the Government Code and Oxnard City Code (OCC) Section 16-410-L (No. 23-535-01). Under the Government Code and OCC, if a development provides at least 1(of the total units for low income households, at least 5% for very-low income households, or least 10% for persons and families of moderate income households in a common inter development, then the developer is eligible for up to one concession or incentive. As propos the residential units will be designated as 100% affordable housing, which pursuant Government Code Section 65915(d)(2)((D), would make the project eligible for up to four concessions or incentives.

The one concession requested is as follows:

1. Reduction of the required residential parking from 64 spaces to 31 residential spaces.

The site is currently legal non-conforming with regard to the required parking for the site, wh in its current configuration requires 58 parking spaces pursuant to the OCC but only provides parking spaces. As the site is currently fully developed, it is not feasible to provide the additio required parking onsite, without a significant site redesign or the use of vehicle lifts. Both these would result in significant cost, due to the required reconstruction and/or infrastructu improvements required. Therefore, the requested concession allows for the additional afforda units and would result in identifiable and actual cost reductions. Pursuant to changes in Secti 16-410F, the Density Bonus is discretionary and falls under the authority of the decision ma on the underlying permit. As conditioned, and in compliance with state law the project sh provide 5 percent of the units for very-low income households and shall be granted one concession or incentive.

The Project is also proposing two 158 sq. ft. additions to accommodate the entrance to the n units. The resulting development will be a 23,957 sq. ft. townhome project, containing residential townhome units, 31 parking spaces, and 13,936 square-feet of open space. identified in the table above, the proposed addition would not alter the site compliance with standards of the R-4 zone.

The Planning Division approves the requested minor modifications, based upon the follow findings and subject to compliance with the following conditions:

FINDINGS

1. The minor modification is consistent with the 2030 General Plan, the land use and zon designations on the property, and City of Oxnard Planned Development Permit No. 13
2. The minor modification is categorically exempt from the provisions of the Califor Environmental Quality Act (CEQA), under Section 15301.

3. The proposed improvements do not significantly intensify the use of the parcel or have any additional adverse effect on abutting parcels or the general health, safety, or welfare of the public.

CONDITIONS

1. Applicant shall obtain a building permit for any new construction or modifications to structures, including interior modifications, authorized by this permit.
2. This permit is granted for the plans dated March 27, 2023 on file with the Planning Division. The project plans shall conform to the plans, except as otherwise specified in these conditions.
3. Before the City issues building permits, Developer shall include a copy of this approval letter with all sets of construction documents and specifications for the project.
4. Prior to issuance of building permits, Developer shall correct all violations of the City Code existing on the project property for which the Code Compliance Division has open cases.
5. Prior to issuance of building permits, Applicant shall pay a document imaging fee for the Planning files in an amount calculated by Planning staff at the time of building permit review based on fees then in effect.
6. Developer shall complete the "Notice of Land Use Restrictions and Conditions" form, using the form provided by the City, for recording with the Ventura County Recorder. Before the City issues building permits, Developer shall submit the original completed, signed and notarized document, together with the required fees to the Planning Manager. (PL, G-8)
7. Prior to issuance of building permits, Developer shall enter into an agreement in a form approved by the City Attorney or provide evidence of existing agreement ensuring the continued availability of ten (10) percent of the units (2) must be rented at a level affordable to persons of families of low income, which qualified the applicant for a Density Bonus. The agreement shall be recorded in the Office of the Ventura County Recorder. The agreement shall establish specific compliance standards and specific remedies available to the City of such compliance standards are not met. The agreement shall, among other things, specify the number of low income affordable units by number of bedrooms, standards for qualifying household incomes or other qualifying criteria, a required annual report, and monitoring fees. Developer hereby agrees to deposit funds for any staff time expended for preparation of the agreement and subsequent compliance with said agreement. The term of the agreement shall be for a minimum of 55 years.
8. Prior to offering the affordable units for rent, the Owner/Developer must submit to the Housing Director the proposed rental amounts for the affordable units for review and approval.

9. Developer agrees, as a condition of adoption of this resolution, at Developer's own expense, to indemnify, defend and hold harmless the City and its agents, officers and employees from and against any claim, action or proceeding to attack, review, set aside, void or annul the approval of the resolution or any condition attached thereto or any proceedings, acts or determinations taken, done or made prior to the approval of such resolution that were part of the approval process. (CA, G-6)
10. This minor modification shall automatically become null and void 24 months from the date of this approval, unless Applicant has diligently developed the proposed project, as shown by the issuance of a grading, foundation, or building permit and the construction of substantial improvements.
11. Except as modified by this request, all permit conditions of Planned Development Permit No. 132 shall remain in full force and effect.

This letter serves as official approval of your minor modification and density bonus requests, and pertains only to those modifications described herein. Enclosed is a set of the approved plans, for your use and/or your records. If you have any questions about this approval, please call Alex Tellez, Assistant Planner, at (805) 385-3923 or alex.tellez@oxnard.org.

Sincerely,

Joe Pearson II, — Date: 3/27/2023
Planning & Environmental Services Manager

Attachments:
1) Approved Project Plans
2) Notice of Land Use Restrictions

Cc:
David Kesterson, Architect, via email (david.kesterson@la-arch.com)
Fredi Contreras, Project Manager, via email (fredi.contreras@oxnard.org)

LAUTERBACH & ASSOCIATES
A R C H I T E C T S • I N C.
David C. Kesterson, Architect • Ilona Scott, Architect • Mark S. Pettit, Architect
300 MONTGOMERY AVENUE, OXNARD, CALIFORNIA 93036 | 805-988-0912 | FAX 805-981-4510 | www.la-arch.com

LICENSED ARCHITECT ILONA SCOTT No. C11881 Ren. 06/21 STATE OF CALIFORNIA

CONCORD DRIVE APARTMENTS
2950 & 2956 CONCORD DRIVE
OXNARD, CA, 93036

CITY OF OXNARD HOUSING AUTHORITY
435 S. D STREET
OXNARD, CALIFORNIA 93030

NO	DESCRIPTION	DATE
	ISSUE	

JOB NO. 20-190708

DRAWN BY: Author
CHECKED BY: Checker
PROJECT MANAGER: Approver
PRINT DATE: 3/28/2023 1:12:14 PM

CONDITIONS OF APPROVAL

G-001

THESE DRAWINGS AND SPECIFICATIONS ARE THE PROPERTY AND COPYRIGHT OF LAUTERBACH & ASSOCIATES, ALL RIGHTS RESERVED, AND SHALL NOT BE USED ON ANY OTHER WORK OR PROJECT EXCEPT BY WRITTEN AGREEMENT WITH LAUTERBACH & ASSOCIATES. WRITTEN DIMENSIONS SHALL TAKE PRECEDENCE OVER SCALED DIMENSIONS AND SHALL BE VERIFIED ON THE JOB SITE. ANY DISCREPANCY SHALL BE BROUGHT TO THE NOTICE OF LAUTERBACH & ASSOCIATES PRIOR TO COMMENCEMENT OF ANY WORK

G:\2019 Projects\20-190708 City of Oxnard-Set 4-Concord\Drawings\Architectural\2950 & 2956 Concord Drive - CD (Site and Elevs).rvt

STRUCTURAL GENERAL NOTES

GENERAL NOTES

1. EACH CONTRACTOR SHALL CHECK AND VERIFY ALL DIMENSIONS AND CONDITIONS AT THE PROJECT SITE BEFORE EXECUTING ANY WORK. HE SHALL NOTIFY THE OWNER, ARCHITECT AND STRUCTURAL ENGINEER OF ANY AND ALL DISCREPANCIES BEFORE PROCEEDING. FOR CLARIFICATION OF DIMENSIONS, DO NOT SCALE FROM DRAWINGS. NUMERICAL DIMENSIONS SHALL TAKE PRIORITY OVER SCALING THE DRAWING.
2. THE LATEST EDITION OF THE GENERAL CONDITIONS AS ACCEPTED BY THE A.I.A. SHALL BE CONSIDERED AS PART OF THESE SPECIFICATIONS.
3. ALL WORK SHALL COMPLY WITH THE 2019 CBC REQUIREMENTS, AND BE APPLICABLE WITH LOCAL CITY ORDINANCES.
4. THE CONTRACTOR SHALL REVIEW THE PLANS AND SPECIFICATIONS WITH THE STRUCTURAL ENGINEER BEFORE BEGINNING CONSTRUCTION.
5. EACH CONTRACTOR SHALL OBTAIN & PAY FOR ALL PERMITS REQUIRED BY LOCAL AUTHORITIES BEFORE PROCEEDING WITH HIS RESPECTIVE INSTALLATION. HE SHALL ALSO ARRANGE & PAY FOR ALL INSPECTIONS AND EXAMINATIONS REQUIRED BY THOSE AUTHORITIES.
6. ALL EXISTING EQUIPMENT REMOVED BY DEMOLITION OR REHABILITATION SHALL BE DISPOSED OF AS DIRECTED BY THE OWNER.
7. REPAIR AND REPLACE ALL PROPERTY DAMAGE BY WORK UNDER THIS PROJECT TO THE SATISFACTION OF THE OWNER AND THE ARCHITECT. ALL PIPING, CONDUIT, ETC. WHICH IS ENCOUNTERED SHALL BE CALLED TO THE ATTENTION OF THE OWNER AND THE ARCHITECT AND SHALL BE ADEQUATELY SUPPORTED UNTIL PERMANENT SUPPORT IS PROVIDED OR REMOVAL IS AUTHORIZED.
8. WHEREVER IN THESE DRAWINGS ANY MATERIAL OR PROCESS IS INDICATED, IT IS FOR THE PURPOSE OF FACILITATING THE DESCRIPTION OF THE MATERIAL OR PROCESS DESIRED. THE CONTRACTOR MAY OFFER ANY MATERIAL OR PROCESS DEEMED EQUIVALENT BY THE OWNER, ARCHITECT AND STRUCTURAL ENGINEER TO THAT MATERIAL OR PROCESS INDICATED OR SPECIFIED.
9. EACH CONTRACTOR SHALL GUARANTEE, BE RESPONSIBLE FOR, & MAKE GOOD ANY AND ALL DEFECTS DUE TO FAULTS OF HIS TRADE FOR LABOR, LEAKS, OR MATERIALS FOR A PERIOD OF ONE YEAR MINIMUM FOLLOWING THE ACCEPTANCE OF THE WORK BY THE OWNER AND ARCHITECT.
10. THE CONTRACTOR SHALL SUPERVISE & DIRECT THE PROJECT DESCRIBED HEREIN. THE CONTRACTOR SHALL BE SOLELY RESPONSIBLE FOR ALL CONSTRUCTION MEANS, METHODS, TECHNIQUES, SEQUENCES & PROCEDURES AND FOR COORDINATING ALL PORTIONS OF THE WORK UNDER CONTRACT. CONTRACTOR HAS SOLE RESPONSIBILITY FOR THE SAFETY & PERFORMANCE OF THE WORK. SAFETY COMPLIANCE SHALL BE IN ACCORDANCE WITH OSHA, U.S. DEPT. OF LABOR, STATE AND LOCAL REQUIREMENTS.
11. THE CONTRACTOR SHALL FURNISH AND BE RESPONSIBLE FOR ADEQUATE SHORING, BRACING, AND PROTECTIVE MEASURES TO SAFELY EXECUTE THE WORK.

GREEN BUILDING NOTES

1. PROVIDE FLASHING FOR ALL NEW ROOF VALLEYS, AROUND NEW WINDOWS, DOORS & AT NEW CHIMNEYS TO ROOF INTERSECTIONS.
2. ALL MATERIALS DELIVERED TO THE CONSTRUCTION SITE SHALL BE PROTECTED FROM RAIN OR OTHER SOURCES MOISTURE.
3. NEW HARDWOOD, PLYWOOD, PARTICLE BOARD, AND MEDIUM DENSITY FIBERBOARD COMPOSITE WOOD PRODUCTS USED IN THE INTERIOR OR EXTERIOR OF THE BUILDING SHALL MEET THE FORMALDEHYDE LIMITS LISTED IN TABLE 4.504.5
4. THE FORMALDEHYDE EMISSIONS FORM, FORM GRN 3 SHALL BE COMPLETED PRIOR TO FINAL INSPECTION APPOVAL. THE MFR'S SPECIFICATIONS SHOWING FORMALDEHYDE CONTENT FOR ALL APPLICABLE WOOD PRODUCTS SHALL BE READILY AVAILABLE AT THE JOB SITE & BE PROVIDED TO THE FIELD INSPECTOR FOR VERIFICATION.
5. A 4" THK. BASE OF 1/2" OR LARGER CLEAN AGGREGATE SHALL BE PROVIDED FOR THE PROPOSED SLAB ON GRADE CONSTRUCTION.
6. A VAPOR BARRIER SHALL BE PROVIDED IN DIRECT CONTACT WITH CONCRETE FOR THE PROPOSED SLAB ON GRADE CONSTRUCTION.
7. BUILDING MATERIALS WITH VISIBLE SIGNS OF WATER DAMAGE SHALL NOT BE INSTALLED. WALL AND FLOOR FRAMING SHALL NOT BE ENCLOSED UNTIL IT IS INSPECTED AND FOUND TO BE SATISFACTORY BY THE BUILDING INSPECTOR.
8. NEW RESIDENTIAL GRADE EQUIPMENT & APPLIANCES PROVIDED AND INSTALLED SHALL BE ENERGY STAR LABELED IF ENERGY STAR IS APPLICABLE TO THAT EQUIPMENT OR APPLIANCE.
9. ALL DUCT AND OTHER RELATED AIR DISTRIBUTION COMPONENT OPENINGS SHALL BE COVERED WITH TAPE, PLASTIC, OR SHEET METAL UNTIL THE FINAL STARTUP OF THE HEATING & COOLING EQUIPMENT.
10. ARCHITECTURAL PAINTS & COATINGS, ADHESIVES, CAULK & SEALANTS SHALL COMPLY WITH THE VOLATILE ORGANIC COMPOUND (VOC) LIMITS LISTED IN TABLE 4.504.3
11. CONSTRUCTION WASTE SHALL BE REDUCED BY 50% AND SHALL BE HANDLED BY A CITY CERTIFIED HAULER.
12. THE HVAC, REFRIGERATION & FIRE SUPPRESSION EQUIPMENT SHALL NOT CONTAIN CFC OR HALONS.
13. AN AIR FILTER WITH A MINIMUM EFFICIENCY REPORTING VALUE (MERV) OF 8 OR HIGHER SHALL BE INSTALLED IN THE MECHANICAL SYSTEM FOR OUTSIDE AND RETURN AIR PRIOR TO OCCUPANCY.
14. THE VOC CONTENT VERIFICATION CHECKLIST, FORM GRN 2, SHALL BE COMPLETED AND VERIFIED PRIOR TO FINAL INSPECTION APPROVAL. THE MANUFACTURER'S SPECIFICATIONS SHOWING VOC CONTENT FOR ALL APPLICABLE PRODUCTS SHALL BE READILY AVAILABLE AT THE JOB SITE & BE PROVIDED TO THE FIELD INSPECTOR FOR VERIFICATION.
15. INSTALLED AUTOMATIC IRRIGATION SYSTEM CONTROLLERS SHALL BE WEATHER OR SOIL MOISTURE BASED CONTROLLERS (CGBSC 4.304.1)
16. RETENTION BASINS OF SUFFICIENT SIZE SHALL BE UTILIZED TO RETAIN STORM WATER ON THE SITE.
17. WHERE STORM WATER IS CONVEYED TO A PUBLIC DRAINAGE SYSTEM, COLLECTION POINT, GUTTER OR SIM. DISPOSAL METHOD, WATER SHALL BE FILTERED BY USE OF A BARRIER SYSTEM, WATTLE OR OTHER METHOD APPROVED BY THE ENFORCING AGENCY.
18. COMPLIANCE WITH A LAWFULLY ENACTED STORM WATER MANAGEMENT ORDINANCE

FRAMING NOTES

1. ALL FRAMING AND CARPENTRY SHALL BE DONE IN ACCORDANCE WITH THOSE APPLICABLE SECTIONS OF CHAPTER 23 OF THE LATEST ADOPTED EDITION OF THE CBC AND DETAILS INDICATED ON THE DRAWINGS.
2. ALL STRUCTURAL LUMBER SHALL BE DOUG FIR-LARCH GRADE IN ACCORDANCE WITH THE LATEST EDITION OF "GRADING AND DRESSING RULES #16 OF THE WEST COAST LUMBER INSPECTION BUREAU" AND SHALL HAVE A MOISTURE CONTENT OF 19% MAX OF THE FOLLOWING GRADES:

   RAFTERS AND JOISTS – #2 AND BETTER
   BEAMS – #1
   POSTS – SELECT STRUCTURAL
   STUDS, PLATES, ALL OTHERS – STUD GRADE
   } UNLESS NOTED OTHERWISE

   NOTIFY ENGINEER IF OTHER SPECIES OF WOOD ARE DELIVERED TO THE SITE OR ARE PART OF THE EXISTING BUILDING.
3. WOOD FRAMING MEMBERS (INCLUDING WOOD SHEATHING) THAT REST ON CONCRETE AND ARE LESS THAN 8 INCHES FROM EXPOSED EARTH SHALL BE OF NATURALLY DURABLE OR PRESERVATIVE-TREATED WOOD.
4. STRUCTURAL MEMBER CUTS, NOTCHES, AND BORES SHALL BE PER 1/S-3.0
5. 2x SOLID BLOCK SHALL BE PLACED BETWEEN JOISTS OR RAFTERS AND AT ALL SUPPORTS.
6. ALL BOLTS TO HAVE FLAT WASHERS UNDER HEAD AND NUT AND AT ALL HOLDOWN BOLTS AND ANCHOR BOLTS. ALL BOLT HOLES SHALL BE 1/32" (MIN), 1/16" (MAX) OVER-SIZED (INSPECTOR TO VERIFY). PROVIDE LEAD HOLE 40-70% OF THREADED SHANK DIA. & FULL DIA. FOR SMOOTH SHANK PORTION.
7. ALL PLYWOOD EXPOSED TO WEATHER SHALL BE EXTERIOR GRADE. WOOD STRUCT. PANELS SHALL COMPLY WITH PS1-09 DOUG FIR-LARCH AND/OR PS2-10 OSB.
8. FRAMING SURROUNDING ALL METAL FIREPLACE VENTS SHALL BE CONTINUOUS 2X4 STUDS @ 16" O.C. SHEATHED WITH 1/2" STRUCT 1 PLYWOOD AND WITH DRAFT STOPS @ 10'-0" o.c. MAX. (FOR PLYWOOD NAILING, SEE ROOF NAILING SCHEDULE.)
9. GLU-LAMINATED MEMBERS SHOULD BE FABRICATED IN ACCORDANCE WITH BUILDING DEPARTMENT STANDARDS AND A.I.T.C. 117-79. A CERTIFICATE OF INSPECTION TO BE SUBMITTED TO THE BUILDING DEPARTMENT PRIOR TO ERECTION. SIMPLE SPAN GLU-LAMS ARE TO BE COMBINATION 24F-V4 CANTILEVER GLU-LAMS TO BE COMBINATION 24F-V8.
10. COMPOSITE FRAMING MEMBERS SHALL BE BY TRUSS JOIST WEYERHAEUSER / BOISE CASCADE U.N.O. FOLLOW MANUFACTURER'S RECOMMENDATIONS FOR STORAGE & INSTALLATION.

    MICROLLAM: 1.8E WS MICROLLAM LVL
    PARALLAM / VERSA LAM: 2.0E WS PARALLAM PSL / Fb = 3100psi
    TIMBERSTRAND: TIMBERSTRAND LSL RIMBOARD 1 1/2" WIDE
    1.5E TIMBERSTRAND LSL HEADER 3 1/2" WIDE
11. PROVIDE 2X6 STUDS IN PLUMBING WALLS TO PREVENT EXCESSIVE NOTCHING AND BORING OF STUDS
12. PROVIDE TWO LAYERS OF GRADE D PAPER BETWEEN SHEAR PANEL AND LATH
13. FIRE BLOCKING SHALL BE INSTALLED AT 20 FT. MAX. INTERVALS AND SHALL BE INSTALLED SO THAT THERE WILL NOT BE OPEN SPACES EXCEEDING 100 SQ. FT. WITHIN CONCEALED SPACES OF EXTERIOR WALL FINISH AND OTHER EXTERIOR ARCHITECTURAL ELEMENTS ERECTED OF COMBUSTIBLE CONSTRUCTION.
14. FIRE BLOCK STUD WALLS AND PARTITIONS (HORIZONTALLY AT 10 FT INTERVALS AND VERTICALLY AT THE CEILING AND FLOOR LEVELS), ENCLOSED AND CONCEALED SPACES, AND AT OPENINGS AROUND VENTS, PIPES, DUCTS, CHIMNEYS, BETWEEN ATTIC AND CHIMNEY CHASE, AT STAIR STRINGERS, AND SIMILAR PLACES AT CEILING AND FLOOR LEVELS.
15. FLOOR JOISTS, CEILING JOISTS, AND RAFTERS 12" OR MORE IN DEPTH SHALL BE SUPPORTED LATERALLY BY BRIDGING AT INTERVALS NOT EXCEEDING 8 FT., UNLESS BOTH EDGES ARE HELD IN LINE.

SOILS ENGINEERING

1. THE SOILS REPORT, NUMBER N/A PREPARED BY N/A DATED N/A IS PART OF THESE PLANS AND ALL RECOMMENDATIONS THEREIN SHALL BE COMPLIED WITH.
2. SPREAD FOOTINGS – ALLOWABLE BEARING = 1500 PSF
   CONTINUOUS FOOTINGS – ALLOWABLE = 1500 PSF
   COEFFICIENT OF FRICTION – ALLOWABLE = 0.25
   PASSIVE EARTH PRESSURE – ALLOWABLE = 250 PCF
   EXPANSIVE INDEX = ________
3. CANTILEVER RETAINING WALLS:
   EQUIVALENT FLUID PRESSURE – 35 PCF & 43 PCF
4. RESTRAINED RETAINING WALLS:
   EQUIVALENT FLUID PRESSURE – 35 PCF & 43 PCF
5. THE ABOVE VALUES MAY BE INCREASED BY 1/3 FOR WIND AND SEISMIC LOADS
6. THE ENGINEER HAS INSPECTED THE SUPPORTING SOILS ON THE SITE AND IS KNOWLEDGEABLE OF THE SOILS IN THE AREA. FINDINGS ARE AS FOLLOWS:
   (1) THE EXISTING FOUNDATION APPEARS TO BE IN A SUFFICIENT STRUCTURAL CONDITION TO BE ADEQUATE TO SUPPORT THE PROPOSED STRUCTURE
7. ALL GRADING, SLAB, FOOTING, AND PAD PREPARATION WORK SHALL COMPLY WITH THE RECOMMENDATIONS AS STATED IN THE REFERENCED REPORT ABOVE
8. PRIOR TO THE CONTRACTOR REQUESTING A BUILDING DEPARTMENT FOUNDATION INSPECTION, THE SOILS ENGR SHALL ADVISE THE BUILDING OFFICIAL IN WRITING THAT:
   (1) THE BUILDING PAD WAS PREPARED IN ACCORDANCE WITH THE SOILS REPORT
   (2) THE UTILITY TRENCHES HAVE BEEN PROPERLY BACKFILLED AND COMPACTED
   (3) THE FOUNDATION EXCAVATIONS COMPLY WITH THE INTENT OF THE SOILS REPORT

CONTACT INFORMATION

ALL-TRADE ENGINEERING
SHANE JUDD, P.E.
(805) 552-4000
17 EAST HIGH STREET
MOORPARK, CA 93021

NAILING SCHEDULE TABLE (2304.10.1)

	ELEMENT/CONNECTION	FASTENER	LOCATION
	ROOF		
1.	Blocking between ceiling joists, rafters or trusses to top plate or other framing below	3 - 8d common (21/2″ × 0.131″) 3-10d box (3"x0.128") 3 - 3″ × 0.131″ nails 3 - 3″ 14 gage staples, 7/16" crown	Toenail each end
	Blocking between rafters or truss not at the wall top plate, to rafter or truss	2 - 8d common (21/2″ × 0.131″) 2 - 3″ × 0.131″ nails 2 - 3″ 14 gage staples	toenail each end
		2-16d common (3 ½"x0.162") 3-3"x0.131" nails 3-3" 14 gage staples	end nail
	Flat blocking to truss and web filler	16d common (3 ½"x0.162") @6" o.c. 3-3"x0.131" nails @ 6" o.c. 3-3" 14 gage staples @ 6" o.c.	Face nail
2.	Ceiling joists to top plate	3-8d common 3-10d box 3-3"x0.131" nails 3-3" 14 gage staples, 7/16" crown	Toenail each joist
3.	Ceiling joist not attached to parallel rafter, laps over partitions (no thrust) (Table and Section2308.7.3.1)	3-16d common 4-10d box 4-3"x0.131" nails 4-3" 14 gage staples, 7/16" crown	Face nail
4.	Ceiling joists attached to parallel rafter (heel joint) (Table and Section2308.7.3.1)	Table 2308.7.3.1	Face nail
5.	Collar tie to rafter	3-10d common 4-10d box 4-3"x0.131" nails 4-3" 14 gage staples, 7/16" crown	Face nail
6.	Rafter or roof truss to top plate (Table and section 2308.7.5)	3-10 common 3-16d box 4-10d box 4-3"x0.131" nails 4-3" 14 gage staples, 7/16" crown	Toenail (c)
7.	Roof rafters to ridge valley or hip rafters; or roof rafter to 2" ridge beam	2-16d common 3-10d box 3-3"x0.131" nails 3-3" 14 gage staples, 7/16" crown	End nail
		3-10d common 3-16d box 4-10d box 4-3"x0.131" nails 4- 3" 14 gage staples, 7/16" crown	Toenail
	WALL		
8.	Stud to Stud (not at braced wall panels)	16d common	24" o.c. face nail
		10d box 3"x0.131" nails 3" 14 gage staples, 7/16" crown	16" o.c. face nail
9.	Stud to stud and abutting studs at intersecting wall **corners (at braced wall panels)**	16d common	16" o.c. face nail
		16d box	12" o.c. face nail
		3"x0.131" nails 3" 14 gage staples, 7/16" crown	12" o.c. face nail
10.	Built-up header	16d common	16" o.c. each edge, face nail
		16d box	12" o.c. each edge, face nail
11.	Continuous header to stud	4-8d common 4-10d box	Toenail
12.	Top plate to top plate	16d common	16" o.c. face nail
		10d box 3"x0.131" nails 3" 14 gage staples, 7/16" crown	12" o.c. face nail

CONCRETE NOTES

1. ALL CONCRETE SHALL HAVE 2500 psi MINIMUM COMPRESSIVE STRENGTH AT 28 DAYS. ALL GRADE BEAMS SHALL HAVE 3000 psi MINIMUM COMPRESSIVE STRENGTH AT 28 DAYS. ALL PILES SHALL HAVE 4000 psi MINIMUM COMPRESSIVE STRENGTH AT 28 DAYS. CONCRETE SHALL BE MECHANICALLY VIBRATED DURING PLACEMENT. DEPUTY INSPECTION REQUIRED FOR ALL CONCRETE GREATER THAN 3000 psi.
2. THE MINIMUM CEMENT CONTENT SHALL BE 6 SACKS MINIMUM PER CUBIC YARD.
3. THE MAXIMUM CONCRETE SLUMP SHALL BE 4 INCHES, PLUS OR MINUS 1 INCH.
4. CEMENT FOR CONCRETE SHALL BE STANDARD BRAND TYPE II, LOW ALKALI, PER ASTM C-150.
5. AGGREGATE SHALL CONFORM TO ASTM C-33, 1 INCH MAXIMUM SIZE, SIZE NUMBER 67 AGGREGATE. A MINIMUM 3"DIA. HOSE FOR PLACING CONCRETE IS REQUIRED. PEA GRAVEL MIXES ARE NOT ALLOWED.
6. WATER REDUCING AGENTS SHALL BE USED TO REDUCE WATER/CEMENT RATIO.
7. FASTENERS FOR PRESERVATIVE TREATED AND FIRE-RETARDANT-TREATED WOOD SHALL BE OF HOT DIPPED ZINC-COATED GALVANIZED STEEL, STAINLESS STEEL, SILICON BRONZE OR COPPER. THE COATING WEIGHTS FOR ZINC-COATED FASTENERS SHALL BE IN ACCORDANCE WITH ASTM A153. FASTENERS OTHER THAN NAILS, TIMBER RIVETS, WOOD SCREWS, AND LAG SCREWS SHALL BE PERMITTED TO BE OF MECHANICALLY DEPOSITED ZINC-COATED STEEL WITH COATING WEIGHTS IN ACCORDANCE WITH ASTM B695, CLASS 55 MIN.
8. ALL EPOXY USED SHALL BE SIMPSON SET-XP EPOXY LARR #25744. DEPUTY INSP REQ'D
9. ALL HOLDOWN ANCHORS AT SHEARWALLS SHALL BE HELD FIRMLY IN PLACE BY A TEMPLATE PRIOR TO FOUNDATION INSPECTION AND POURING CONCRETE. EXACT HOLDOWN LOCATION MUST BE COORDINATED BETWEEN CONCRETE CONTRACTOR AND FRAMING CONTRACTOR.
10. SOIL COMPACTION REPORT SHALL BE PROVIDED TO THE BUILDING INSPECTOR AT THE JOBSITE PRIOR TO PLACEMENT OF CONCRETE FOR THE FOUNDATION.
12. THE CONTRACTOR AND SUB-CONTRACTOR SHALL VERIFY ALL CONDITIONS SHOWN ON PLANS AT THE SITE PRIOR TO COMMENCING WORK.
13. THE REINFORCING STEEL SHALL BE INTERMEDIATE GRADE, DEFORMED BARS CONFORMING TO A.S.T.M. A-615 GRADE 60. THE PLACING OF REINFORCING STEEL SHALL BE IN ACCORDANCE WITH CHAPTER 19 OF THE 2019 CBC.
14. CRACK CONTROL JOINTS, ONE-QUARTER OF THE SLAB DEPTH, TO BE SAWCUT 10' TO 15' O.C. EACH WAY WITHIN 24 HOURS OF POUR.
15. STEEL PLATE WASHERS SHALL BE A MINIMUM OF 3"X3"X.229" AND SHALL BE PLACED BETWEEN THE FOUNDATION SILL PLATE AND THE NUT
16. HOLD-DOWN ANCHORS MUST BE RE-TIGHTENED JUST PRIOR TO COVERING THE WALL FRAMING
17. A CORROSION-RESISTANT WEEP SCREED IS REQUIRED BELOW STUCCO A MINIMUM OF 4"/2" ABOVE GRADE/SLAB.
18. PROVIDE 5/8" DIAMETER X 10" MINIMUM ANCHOR BOLTS WITH 7" EMBEDMENT SPACED NOT MORE THAN 4 FT. APART AND NOT MORE THAN 12" OR LESS THAN 4" FROM EACH END PIECE
19. MINIMUM CONCRETE STEMWALL THICKNESS IS 7.5"
20. ALL HDU HOLD-DOWNS TO HAVE SDS2.5 SCREWS PER MANUFACTURER'S CATALOG.

NAILING SCHEDULE (CONT'D)

	ELEMENT/CONNECTION	FASTENER	LOCATION
13.	Top plate to top plate, at end joints	8-16d common 12-10d box 12-3"x0.131" nails 12-3" 14 gage staples, 7/16" crown	Each side of end joint, face nail (min 24" lap splice length each side of end joint)
14.	Bottom plate to joist, rim joist, band joist or blocking (not at braced wall panels)	16d common	16" o.c. face nail
		16d box 3"x0.131" nails 3" 14 gage staples, 7/16" crown	12" o.c. face nail
15.	Bottom plate to joist, rim joist, band joist or blocking **at braced wall panels**	2-16d common 3-16d box 4-3"x0.131" nails 4-3" 14 gage staples, 7/16" crown	16" o.c. face nail
16.	Stud to top or bottom plate	4-8d common 4-10d box 4-3"x0.131" nails 4-3" 14 gage staples, 7/16" crown	Toenail
		2-16d common 3-10d box 3-3"x0.131" nails 3-3" 14 gage staples, 7/16" crown	End nail
17.	Top or bottom plate to stud	2-16d common 3-10d box 3-3"x0.131" nails 3-3" 14 gage staples, 7/16" crown	End nail
18.	Top plates, laps at corners and intersections	2-16d common 3-10d box 3- 3"x0.131" nails 3-3" 14 gage staples, 7/16" crown	Face nail
19.	1" brace to each stud and plate	2-8d common 2-10d box 2- 3"x0.131" nails 2- 3" 14 gage staples, 7/16" crown	Face nail
20.	1"x6" sheathing to each bearing	2-8d common 2-10d box	Face nail
21.	1"8" and wider sheathing to each bearing	3-8d common 3-10d box	Face nail
	FLOOR		
22.	Joist to sill, top plate, or girder	3-8d common 3-10d box 3-3"x0.131" nails 3-3" 14 gage staples, 7/16" crown	Toenail
23.	Rim joist, band joist, or blocking to top plate, sill or other framing below	8d common 10d box 3"x0.131" nails 3" 14 gage staples, 7/16" crown	6" o.c., toenail
24.	1"x6" subfloor or less to each joist	2-8d common 2-10d box	Face nail
25.	2" subfloor to joist or girder	2-16d common	Face nail
26.	2" plank	2-16d common	Each bearing, face nail
27.	Built up girders and beams, 2" lumber layers	20d common	32" o.c. face nail at top and bottom staggered on opposite sides
		10d box 3"x0.131" nails 3" 14 gage staples, 7/16" crown	24" o.c. face nail at top and bottom staggered on opposite sides
		And 2-20d common 3-10dbox 3- 3"x0.131" nails 3- 3" 14 gage staples, 7/16" crown	Ends and at each splice, face nail
28.	Ledger strip supporting joists or rafters	3-16d common 4-10d box 4-3"x0.131" nails 4-3" 14 gage staples, 7/16" crown	Each joist or rafter, face nail
29.	Joist to band joist or rim joist	3-16d common 4-10d box 4-3"x0.131" nails 4-3" 14 gage staples, 7/16" crown	End nail
30.	Bridging or blocking to joist, rafter or truss	2-8d common	Each end, toenail
		2-10d box 2-3"x0.131" nails 2-3" 14 gage staples, 7/16" crown	
	WOOD STRUCTURAL PANS, SUB FLOOR, ROOF AND INTERIOR WALL SHEATHING TO FRAMING AND PARTICLEBOARD WALL SHEATHING TO FRAMING (a)		
31.	3/8"-1/2"	6d common or deformed (2"x0.113") (subfloor and wall) 8d box or deformed (roof) 2 3/8"x0.113" nail (subfloor and wall)	6" edge 12" intermediate supports
		1 ¾" 16 gage staple, 7/16" crown 2 3/8" x0.113" nail (roof)	4" edge 8" intermediate supports
		1 ¾"16 gage staple, 7/16" crown (roof)	3" edge 6" intermediate supports
32.	19/32" –3/4"	8d common 6d deformed	6" edge 12" intermediate supports
		2 3/8"x0.113 nail 2" 16" gage staple, 7/16" crown	4" edge 8" intermediate supports
33.	7/8" – 1/4"	10d common 8d deformed	6" edge 12" intermediate supports
	OTHER EXTERIOR WALL SHEATHING		
34.	1/2" fiberboard sheathing(b)	1 ½" galvanized roof nail 1 ¼" 16 gage staple with 7/16" or 1" crown	3" edge 6" intermediate supports
35.	25/32" fiberboard sheathing (b)	1 ¾" galvanized roof nail 1 ½" 16 gage staple with 7/16" or 1" crown	3" edge 6" intermediate supports
	WOOD STRUCTURAL PANELS, COMBINATION SUBFLOOR UNDERLAYMENT TO FRAMING		
36.	¾" and less	8d common 6d deformed	6" edge 12" intermediate supports
37.	7/8"-1"	8d common 8d deformed	6" edge 12" intermediate supports
38.	1 1/8"-1 ¼"	10d common 8d deformed	6" edge 12" intermediate supports
	PANEL SIDING TO FRAMING		
39.	½" or less	6d corrosion-resistant siding 6d corrosion-resistant casing	6" edge 12" intermediate supports
40.	5/8"	8d corrosion-resistant siding 8d corrosion-resistant casing	6" edge 12" intermediate supports
	INTERIOR PANELING		
41.	¼"	4d casing 4d finish	6" edge 12" intermediate supports
42.	3/8"	6d casing 6d finish	6" edge 12" intermediate supports

For SI: 1 inch = 25.4 mm.
a. Nails spaced at 6 inches at intermediate supports where spans are 48" or more. For nailing of wood structural panel and particleboard diaphragms and shear walls, refer to Section 2305. Nails for wall sheathing are permitted to be common, box or casing.
b. Spacing shall be 6 inches on center on the edges and 12 inches on center at intermediate supports for nonstructural applications. Panel supports at 16 inches (20 inches if strength axis in the long direction of the panel, unless otherwise marked).

THESE DRAWINGS AND SPECIFICATIONS ARE THE PROPERTY AND COPYRIGHT OF LAUTERBACH & ASSOCIATES, ALL RIGHTS RESERVED, AND SHALL NOT BE USED ON ANY OTHER WORK OR PROJECT EXCEPT BY WRITTEN AGREEMENT WITH LAUTERBACH & ASSOCIATES. WRITTEN DIMENSIONS SHALL TAKE PRECEDENCE OVER SCALED DIMENSIONS AND SHALL BE VERIFIED ON THE JOB SITE, ANY DISCREPANCY SHALL BE BROUGHT TO THE NOTICE OF LAUTERBACH & ASSOCIATES PRIOR TO COMMENCEMENT OF ANY WORK.

LAUTERBACH & ASSOCIATES
ARCHITECTS, INC.
David C. Kesterson, Architect • Ilona Scott, Architect • Mark S. Pettit, Architect
300 MONTGOMERY AVENUE, OXNARD, CALIFORNIA 93036 | 805-988-0912 | FAX 805-981-4510 | www.la-arch.com

REGISTERED PROFESSIONAL ENGINEER SHANE DENNIS JUDD No. M34632 MECHANICAL STATE OF CALIFORNIA

REGISTERED PROFESSIONAL ENGINEER SHANE DENNIS JUDD No. C70891 CIVIL STATE OF CALIFORNIA

CONCORD DRIVE APARTMENTS
2950 & 2956 CONCORD DRIVE
OXNARD, CA, 93036

CITY OF OXNARD HOUSING AUTHORITY
435 S. D STREET
OXNARD, CALIFORNIA 93030

NO	DESCRIPTION	DATE
1	SUBMIT	02-26-2020

ISSUE

JOB NO. 20-190209

DRAWN BY:
CHECKED BY:
PROJECT MANAGER:
PRINT DATE: 2/15/19 8:36:51 AM

GENERAL NOTES

S-1.0

STRUCTURAL GENERAL NOTES (CONTINUED)

2019 CRC DESIGN LOADS

1. (R301 CRC) FLOOR LIVE LOADS:
   UNIFORM FLOOR LOAD: 40 psf
   UNIFORM DECK LOAD: 60 psf
   CONCENTRATED LOAD: 300 lb
   NO LIVE LOAD REDUCTIONS TAKEN

2. (R301 CRC) CEILING LIVE LOADS:
   UNINHABITABLE ATTICS WITHOUT STORAGE: 10 psf
   UNINHABITABLE ATTICS WITH LIMITED STORAGE: 20 psf
   HABITABLE ATTICS: 30 psf

3. (R301 CRC) ROOF LIVE LOAD: 20 psf
   NO LIVE LOAD REDUCTIONS TAKEN

4. (CBC 1609 & ASCE 7-10) WIND DESIGN DATA:
   ULTIMATE WIND SPEED (3-MILE GUST): 110
   NOMINAL WIND SPEED (3-MILE GUST): 38
   WIND EXPOSURE: C
   INTERNAL PRESSURE COEFFICIENT: 0.18

5. (CBC 1613 & ASCE 7-10) EARTHQUAKE DESIGN DATA:
   SEISMIC IMPORTANCE FACTOR I: 1.0
   RISK CATEGORY: II
   SPECTRAL RESPONSE ACCELERATIONS: Ss=1.947 S1=0.686
   SITE CLASS: D
   SPECTRAL RESPONSE COEFFICIENTS: Sds=1.298 Sd1=0.686
   SEISMIC DESIGN CATEGORY: D
   SEISMIC-FORCE RESISTING SYSTEM: WOOD SHEAR WALLS, ORDINARY REINFORCED CONCRETE S.W., CANTILEVER COLUMNS
   DESIGN BASE SHEAR: V=0.185W, V=0.301W, V=0.964W
   SEISMIC RESPONSE COEFFICIENT: Cs=0.200, Cs=0.325, Cs=1.038
   RESPONSE MODIFICATIONS FACTOR: R=6.5, R=4.0, R=1.25
   REDUNDANCY FACTOR: p=1.3 (12.3.4.2 ASCE)
   ANALYSIS PROCEDURE USED: EQUIVALENT LATERAL FORCE

CONTRACTOR RESPONSIBILITY

1. EACH CONTRACTOR RESPONSIBLE FOR THE CONSTRUCTION OF A MAIN WIND OR SEISMIC FORCE RESISTING SYSTEM, DESIGNATED SEISMIC SYSTEM OR A WIND OR SEISMIC RESISTING COMPONENT LISTED IN THE STATEMENT OF SPECIAL INSPECTIONS SHALL SUBMIT A WRITTEN STATEMENT OF RESPONSIBILITY TO THE BUILDING OFFICIAL AND THE OWNER PRIOR TO THE COMMENCEMENT OF WORK ON THE SYSTEM OR COMPONENT. THE CONTRACTOR'S STATEMENT OF RESPONSIBILITY SHALL CONTAIN THE FOLLOWING:
   (1) ACKNOWLEDGEMENT OF AWARENESS OF THE SPECIAL REQUIREMENTS CONTAINED IN THE STATEMENT OF SPECIAL INSPECTIONS
   (2) ACKNOWLEDGEMENT THAT CONTROL WILL BE EXERCISED TO OBTAIN CONFORMANCE WITH THE CONSTRUCTION DOCUMENTS APPROVED BY THE BUILDING OFFICIAL
   (3) PROCEDURES FOR EXERCISING CONTROL WITHIN THE CONTRACTOR'S ORGANIZATION, THE METHOD OF FREQUENCY OF REPORTING AND THE DISTRIBUTION OF THE REPORTS
   (4) IDENTIFICATION AND QUALIFICATION OF THE PERSON(S) EXERCISING SUCH CONTROL AND THEIR POSITION(S) IN THE ORGANIZATION

2. BY BEGINNING CONSTRUCTION ON THIS BUILDING, THE CONTRACTOR AGREES HE HAS THOROUGHLY REVIEWED THESE PLANS AND BELIEVES HE CAN BUILD THIS STRUCTURE AS THE PLANS ARE DRAWN AND DETAILED

ABBREVIATIONS

ABBR.	CORRECT SPELLING
A.B.	ANCHOR BOLT
B., BOT.	BOTTOM
B.O.B.	BOTTOM OF BEAM
B.N.	BOUNDARY NAILING
BLK'G	BLOCKING
C.J.	CEILING JOIST
CMU	CONCRETE MASONRY UNIT
CONC.	CONCRETE
CONT.	CONTINUOUS
D.	DEEP
D.F.	DOUGLAS FIR
DBL.	DOUBLE
DIA.	DIAMETER
EA.	EACH
E.N.	EDGE NAILING
E.W.	EACH WAY
F.J.	FLOOR JOIST
FT.	FEET
GLB	GLU-LAM BEAM
HOR., HORIZ.	HORIZONTAL
IN.	INCH
K.P.	KING POST
LT. WT.	LIGHT WEIGHT
M.B.	MACHINE BOLT
M.L.	MICROLLAM
MAX.	MAXIMUM
MIN.	MINIMUM
O.C.	ON CENTER
O/	OVER
P.C.	PIPE COLUMN
P.L.	PARALLAM
P.T.	POST-TENSION
PSR	PLYWOOD SPAN RATING
R.R.	ROOF RAFTER
SD.	SIDE
S.N.	SILL NAILING
SEL. STR.	SELECT STRUCTURAL
SIM.	SIMILAR
STAG.	STAGGERED
STD.	STANDARD
STL.	STEEL
T.	TOP
THK.	THICK
TJI	TRUS JOIST OR EQUIVALENT
TPL.	TRIPLE
TRIM	TRIMMER
TYP.	TYPICAL
U.N.O.	UNLESS NOTED OTHERWISE
U.W.A.	UNDER WALL ABOVE
VERT.	VERTICAL
W.	WIDE
W/	WITH

STRUCTURAL OBSERVATIONS

1. THE OWNER SHALL EMPLOY THE ENGINEER REGISTERED IN THE STATE OF CALIFORNIA WHO IS RESPONSIBLE FOR THE STRUCTURAL DESIGN TO DO STRUCTURAL OBSERVATION. 72 HOURS NOTICE IS REQUIRED FOR MEETINGS AND OBSERVATIONS.

2. NAME AND NUMBER OF ENGINEER RESPONSIBLE FOR THE STRUCTURAL DESIGN: SHANE JUDD #C70991

3. NAME AND NUMBER OF THE ENGINEERS THAT MAY BE DESIGNATED TO DO THE STRUCTURAL OBSERVATION: SHANE JUDD #C70991

4. THE ENGINEER RESPONSIBLE FOR THE STRUCTURAL OBSERVATION, THE CONTRACTOR, AND APPROPRIATE SUBCONTRACTORS SHALL HOLD A PRE-CONSTRUCTION MEETING TO REVIEW THE DETAILS OF THE STRUCTURAL SYSTEM TO BE STRUCTURALLY OBSERVED.

5. AT THE CONCLUSION OF THE WORK INCLUDED IN THE PERMIT, THE STRUCTURAL OBSERVER SHALL SUBMIT TO THE BUILDING OFFICIAL A WRITTEN STATEMENT THAT THE SITE VISITS HAVE BEEN MADE AND IDENTIFY ANY REPORTED DEFICIENCIES THAT, TO THE BEST OF THE STRUCTURAL OBSERVER'S KNOWLEDGE, HAVE NOT BEEN RESOLVED.

6. THE FOLLOWING ITEMS ARE TO BE OBSERVED BY THE ENGINEER DURING STRUCTURAL OBSERVATION:

   FOUNDATION:
   a) FOOTING REINFORCEMENT PLACEMENT
   b) SLAB REINFORCEMENT LAYOUT AND SPACING
   c) SHRINKAGE REINFORCEMENT

   ROOF NAILING:
   a) RAFTER AND PLYWOOD INSTALLATION
   b) ROOF DIAPHRAGM NAILING
   c) SHEAR TRANSFER FROM ROOF TO WALLS
   d) FRAMING SUPPORTING ROOF

   EXTERIOR FRAMING PRIOR TO PREWRAP:
   a) UPPER FLOOR SHEAR WALL NAILING AND HOLDOWNS
   b) LOWER FLOOR SHEAR WALL NAILING, AND HOLDOWNS AND ANCHOR BOLTS
   c) FLOOR TO FLOOR SHEAR TRANSFER

   SEISMIC/WIND FORCE RESISTING SYSTEM:
   WOOD:
   a) DIAPHRAGMS AND SHEAR WALLS WHERE THE NAILING IS 4"O.C. OR LESS
   b) DRAG CONNECTIONS, DIAPHRAGM CHORDS
   c) BEAMS & PLATES SUPPORTING HOLD-DOWNS & UPLIFT CONNECTORS

   FINAL OBSERVATION:
   a) FLOOR DRAG NAILING
   b) ALL STRUCTURAL DETAILS

7. ENGINEER OF RECORD OR THE DESIGNATED ENGINEER SHALL SUBMIT REPORTS ON THE PRESCRIBED FORM BY THE COUNTY

CONCRETE MASONRY NOTES

MATERIALS:
1. CONCRETE BLOCKS: CONFORMS TO ASTM C90.44 NORMAL WEIGHT
2. REINFORCEMENT: CONFORMS TO ASTM A615, MINIMUM 60 GRADE
3. CONCRETE: MIN. COMPRESSIVE STRENGTH SHALL BE 2500 PSI AT 28 DAYS FOR FOOTINGS AND 3000 PSI AT 28 DAYS FOR STEM WALLS

GENERAL SPECIFICATIONS:
1. CONTRACTOR SHALL VERIFY ALL DIMENSIONS AND CONDITIONS ON THE JOB. THE CONTRACTOR SHALL BE RESPONSIBLE FOR THE TEMPORARY SUPPORT OF ANY VERTICAL EARTH CUTS OVER 4'-0" IN HEIGHT.
2. ALL CELLS BELOW BACKFILL AND ALL OTHER CELLS WHICH CONTAIN REINFORCEMENT TO BE FILLED WITH GROUT AND CONSOLIDATED. U.N.O.
3. MORTAR SHALL BE TYPE S CONSISTING OF PORTLAND CEMENT, HYDRATED LIME, SAND AND POTABLE WATER WITH NO SUBSTITUTIONS. 2000 PSI MIN. SEE BELOW FOR MIN. MIX
4. REINFORCEMENT TO BE SPLICED 48 DIAMETERS MIN AND NO LESS THAN 24".
5. REINFORCEMENT SHALL BE ACCURATELY PLACED AND SECURED SO THAT IT WILL NOT BE DISPLACED. ALL CONCRETE SHALL BE PROPERLY CONSOLIDATED DURING PLACEMENT. ALL REINFORCING STEEL AND EMBEDDED ITEMS SHALL BE SECURELY TIED IN PLACE TO PREVENT DISPLACEMENT DURING GROUT PLACEMENT.
6. GROUT SHALL BE CONSOLIDATED TO INSURE A GOOD CONTACT WITH REINFORCEMENT AND TO ELIMINATE ROCK POCKETS AND VOIDS. THE CONTRACTOR SHALL TAKE ADEQUATE PRECAUTIONS FOR MIXING, PLACING, FINISHING, CURING AND PROTECTING CONCRETE DURING UNFAVORABLE WEATHER CONDITIONS.
7. POURING LIFTS SHALL BE 6'-0" MAX WITH CLEANOUTS PROVIDED FOR POURS OVER 5'-0".
8. POUR ALL FOOTINGS AGAINST SOLID NATURAL UNDISTURBED EARTH OR COMPACTED FILL COMPACTED TO 90% RELATIVE DENSITY.
9. USE 4" DIAMETER PERFORATED PVC DRAIN. PVC PIPE MUST DRAIN TO DOWN SLOPE AND BE NO LONGER THAN 40' WITHOUT SPECIAL DESIGN.
10. BACKFILL WITH 6" WIDTH OF SAND OR CLEAN COARSE GRAVEL AND COVER WITH A 12" THICK COMPACTED FILL BLANKET AT THE SURFACE. BACKFILL SHALL NOT BE PLACED UNTIL 14 DAYS AFTER GROUTING.
11. ALL WALLS SHALL BE WATERPROOFED ON THE SOIL SIDE BELOW FINISH GR.
12. CONCRETE BLOCK UNITS TO BE STAGGERED (RUNNING BOND).
13. CONCRETE BLOCK UNITS TO BE STANDARD 8"X8"X16" UNITS CONFORMING TO ASTM C90, GRADE N, TYPE II MIN. AND UBC STANDARD 21-4 UNO.
14. ALL FOOTINGS TO BE 12" MIN. INTO NATURAL GROUND.
15. IF 2500 PSI CONCRETE MIX IS SITE MIXED, USE 1 PART PORTLAND CEMENT, 2 PARTS SAND, 3 PARTS 1" ROCK W/A MAXIMUM OF 7 GALLONS OF WATER PER SACK OF CEMENT.
16. GROUT MIX FOR CONCRETE BLOCK WALL TO BE 2000 PSI, 1 PART PORTLAND CEMENT TO 3 PARTS SAND TO WHICH MAY BE ADDED NOT MORE THAN 1/10 PART LIME. SUFFICIENT WATER TO BE ADDED TO PRODUCE CONSISTENCY FOR POURING WITHOUT SEGREGATION OF THE CONSTITUENTS. GROUT MAY CONTAIN PEA GRAVEL TO A MAX. SIZE OF 3/8".
17. MORTAR MIX FOR CONCRETE BLOCKS TO BE 1 PART CEMENT TO 1/4 HYDRATED LIME TO 3 1/2 PARTS DAMP LOOSE SAND.

SPECIAL INSPECTIONS

1. THE OWNER OR REGISTERED DESIGN PROFESSIONAL IN RESPONSIBLE CHARGE ACTING AS THE OWNERS AGENT SHALL EMPLOY ONE OR MORE SPECIAL INSPECTORS DURING CONSTRUCTION ON THE TYPES OF WORK LISTED UNDER SECTION 1705 OF THE 2019 CBC. THE SPECIAL INSPECTOR SHALL BE A QUALIFIED PERSON WHO SHALL DEMONSTRATE COMPETENCE, TO THE SATISFACTION OF THE BUILDING OFFICIAL, FOR INSPECTION OF THE PARTICULAR TYPE OF CONSTRUCTION OR OPERATION REQUIRING SPECIAL INSPECTION.

2. SPECIAL INSPECTORS SHALL KEEP RECORDS OF INSPECTIONS. THE SPECIAL INSPECTOR SHALL FURNISH INSPECTION REPORTS TO THE BUILDING OFFICIAL, AND TO THE REGISTERED DESIGN PROFESSIONAL IN RESPONSIBLE CHARGE. REPORTS SHALL INDICATE THAT THE WORK INSPECTED WAS DONE IN CONFORMANCE TO APPROVED CONSTRUCTION DOCUMENTS. DISCREPANCIES SHALL BE BROUGH TO THE IMMEDIATE ATTENTION OF THE CONTRACTOR FOR CORRECTION. IF THE DISCREPANCIES ARE NOT CORRECTED, THE DISCREPANCIES SHALL BE BROUGHT TO THE ATTENTION OF THE BUILDING OFFICIAL AND TO THE REGISTERED DESIGN PROFESSIONAL IN RESPONSIBLE CHARGE PRIOR TO THE COMPLETION OF THAT PHASE OF WORK. A FINAL REPORT DOCUMENTING REQUIRED SPECIAL INSPECTION AND CORRECTION OF ANY DISCREPANCIES NOTED IN THE INSPECTIONS SHALL BE SUBMITTED AT A POINT IN TIME AGREED UPON BY THE PERMIT APPLICANT AND THE BUILDING OFFICIAL PRIOR TO START OF WORK.

3. THE FOLLOWING ITEMS REQUIRE SPECIAL INSPECTION:

   THE WIND AND SEISMIC FORCE RESISTING SYSTEMS ARE TO BE INSPECTED/OBSERVED BY THE ENGINEER OF RECORD (SEE STRUCT OBSERVATIONS)

   STEEL CONSTRUCTION AND FIELD WELDING (SEE TABLE 1705.21 & 1705.12.1)
   PIER FOUNDATIONS (SEE TABLE 1705.8)
   PILE FOUNDATIONS (SEE TABLE 1705.8)
   EPOXY USED FOR ANCHOR BOLTS, HOLDOWNS, AND STRUCTURAL RETROFITS
   CONCRETE CONSTRUCTION (SEE TABLE 1705.3)
   SOILS (SEE TABLE 1705.4)
   ANCHORAGE OF ELECTRICAL EQUIPMENT IN SDC E AND F
   MASONRY CONSTRUCTION (SEE TABLE 1705.4)
   CONCRETE WHERE Fc' EXCEEDS 2500 psi
   POST-INTALLED ANCHORS (SEE TABLE 1705.1.1)
   DIAPHRAGMS AND SHEAR WALLS WHERE THE NAILING IS 4"O.C. OR LESS
   EXTERIOR WALL PANELS AND THEIR ANCHORAGE
   SUSPENDED CEILINGS AND THEIR ANCHORAGE
   ACCESS FLOORS AND THEIR ANCHORAGE
   STEEL STORAGE RACKS 8 ft OR GREATER AND THEIR ANCHORAGE

   SPECIAL CASES (WHEN ORDERED BY THE BUILDING OFFICIALS)

4. SEE THE ADJACENT STATEMENTS OF SPECIAL INSPECTIONS FOR SPECIFIC REQUIREMENTS OF EACH TYPE OF SPECIAL INSPECTION

STATEMENT OF SPECIAL INSPECTIONS

TABLE 1705.3
REQUIRED VERIFICATION AND INSPECTION OF CONCRETE CONSTRUCTION

VERIFICATION AND INSPECTION	CONTINUOUS	PERIODIC	REFERENCED STANDARDa	IBC REFERENCE
1. Inspection of reinforcing steel, including prestressing tendons, and placement.	—	X	ACI 318: 3.5, 7.1-7.7	1910.4
2. Inspection of reinforcing steel welding in accordance with Table 1705.2.2, Item 2b.	—	—	AWS D1.4 ACI 318: 3.5.2	—
3. Inspection of anchors cast in concrete where allowable loads have been increased or where strength design is used.	—	X	ACI 318: D.9.2	1908.5
4. Inspection of anchors post-installed in hardened concrete membersb a. Adhesive anchors installed in horizontally or upwardly inclined orientations to resist sustained tension loads.	X		ACI 318:D.9.2.4	—
b. Mechanical anchors and adhesive anchors not defined in 4.a.		X	ACI 318: D.9.2	—
5. Verifying use of required design mix.	—	X	ACI 318: Ch. 4, 5.2-5.4	1904.2, 1910.2, 1910.3
6. At the time fresh concrete is sampled to fabricate specimens for strength tests, perform slump and air content tests, and determine the temperature of the concrete.	X		ASTM C 172 ASTM C 31 ACI 318: 5.6, 5.8	1910.10
7. Inspection of concrete and shotcrete placement for proper application techniques.	X	—	ACI 318: 5.9, 5.10	1910.6, 1910.7, 1910.8
8. Inspection for maintenance of specified curing temperature and techniques.	—	X	ACI 318: 5.11-5.13	1910.9
9. Inspection of prestressed concrete: a. Application of prestressing forces. b. Grouting of bonded prestressing tendons in the seismic force-resisting system.	X X	—	ACI 318: 18.20 ACI 318: 18.18.4	—
10. Erection of precast concrete members.	—	X	ACI 318: Ch. 16	—
11. Verification of in-situ concrete strength, prior to stressing of tendons in post-tensioned concrete and prior to removal of shores and forms from beams and structural slabs.	—	X	ACI 318: 6.2	—
12. Inspect formwork for shape, location and dimensions of the concrete member being formed.	—	X	ACI 318: 6.1.1	—

For SI: 1 inch = 25.4 mm.
a. Where applicable, see also Section 1705.11, Special inspections for seismic resistance.
b. Specific requirements for special inspection shall be included in the research report for the anchor issued by an approved source in accordance with ACI 355.2, D.9.2 in ACI 318, or other qualification procedures. Where specific requirements are not provided, special inspection requirements shall be specified by the registered design professional and shall be approved by the building official prior to the commencement of the work.

TABLE 1705.2.2
REQUIRED VERIFICATION AND INSPECTION OF STEEL CONSTRUCTION OTHER THAN STRUCTURAL STEEL

VERIFICATION AND INSPECTION	CONTINUOUS	PERIODIC	REFERENCED STANDARDa
1. Material verification of cold-formed steel deck:			
a. Identification markings to conform to ASTM standards specified in the approved construction documents.	—	X	Applicable ASTM material standards
b. Manufacturer's certified test reports.	—	X	
2. Inspection of welding:			
a. Cold-formed steel deck:			
1) Floor and roof deck welds.	—	X	AWS D1.3
b. Reinforcing steel:			
1) Verification of weldability of reinforcing steel other than ASTM A 706.	—		AWS D1.4 ACI 318: Section 3.5.2
2) Reinforcing steel resisting flexural and axial forces in intermediate and special moment frames, and boundary elements of special structural walls of concrete and shear reinforcement.	X	—	
3) Shear reinforcement.	X	—	
4) Other reinforcing steel.	—		

For SI: 1 inch = 25.4 mm.

STATEMENT OF SPECIAL INSPECTIONS (CONTINUED)

Table 8-a Location and Frequencies of bolting inspections

Inspection Tasks Prior to Bolting	QC Task	QC Doc.	QA Task	QA Doc.
Proper bolt selected for the joint detail	O	-	O	-
Proper bolting procedure selected for joint detail	O	-	O	-
Connecting elements are fabricated properly, including the appropriate faying surface condition and hole preparation, if specified, meets appliable requirements	O	-	O	-
Pre-installation verification testing conducted for fastener assemblies and method used.	P	D	O	D
Proper storage provided for bolts, nuts, washers, and other fastener components.	O	-	O	-
Inspection Tasks During Bolting	**QC Task**	**QC Doc.**	**QA Task**	**QA Doc.**
Fastener assemblies placed in all holes and washers (if required) are properly positioned	O	-	O	-
Joint bought to a snug tight condition prior to pretensioning operation	O	-	O	-
Fastener component not turned by the wrench prevented from rotating	O	-	O	-
Bolts are pretensioned progressing systematically from most rigid point toward free edges	O	-	O	-
Inspection Tasks After Bolting	**QC Task**	**QC Doc.**	**QA Task**	**QA Doc.**
Document accepted and rejected connections	P	D	P	D

Table 8-b Location and Frequencies of welding inspections

Visual Inspection Tasks Before Welding	QC Task	QC Doc.	QA Task	QA Doc.
Material Identification (Type/Grade)	O	-	O	-
Welder identification system	O	-	O	-
Fit-up of Grove Welds (including joint geometry) - Joint preparation - Dimensions (alignment, root opening, root face, bevel) - Cleanliness (condition of steel surface) - Tacking (tack weld quality and location) - Backing type and fit (if applicable)	P/O**	-	O	-
Configuration and finish of access holes	O	-	O	-
Fit-up of fillet welds - Dimensions (alignment, gaps at root) - Cleanliness (condition of steel surfaces) - Tacking (tack weld quality and location)	P/O**		O	

** Following performance of this inspection task for ten welds to be made by a given welder, with the welder demonstrating adequate understanding of the requirements and possession of skills and tools to verify these items, the Perform designation of this task shall be reduced to Oberve, and the welder shall perform this task. Should the inspector determine that the welder has discontinued adequate performance of this task, the task shall be returned Perform until such time as the inspector has reestablished adequate assurance that the welder will perform the inspection tasks listed.

Visual Inspection Tasks During Welding	QC Task	QC Doc.	QA Task	QA Doc.
WPS followed - Settings on welding equipment - Travel Speed - Selected welding materials - Shielding gas type/flow rate - Preheat applied - Interpass temperature manitained (min./max.) - Proper position (F,V,H,OH) - Intermix of filler metals avoided unless approved	O	-	O	-
Use of qualified welders	O	-	O	-
Control and handling of welding consumables - Packaging - Exposure control	O	-	O	-
Envirnoment conditions - Wind speed within limits - Precipitation and temperature	O	-	O	-
Welding techniques - Interpass and final cleaning - Each pass within profile limitations - Each pass meets quality requirements	O		O	
No welding over cracked tacks	O	-	O	-
Visual Inspection Tasks After Welding	**QC Task**	**QC Doc.**	**QA Task**	**QA Doc.**
Welds cleaned	O	-	O	-
Verify size, length, and location of welds	P	-	P	-
Visually inspect welds to acceptance criteria - Crack prohibition - Weld/base-metal fusion - Crater cross-section - Weld profiles - Weld size - Undercut - Porosity	P	D	P	D
Placement of reinforcing or contouring fillet welds (if required)	P	D	P	D
Backing removed, weld tabs removed and finished, and fillet welds added (if required)	P	D	P	D
Repair activities	P	-	P	D

Table 8-c Location and Frequencies of other inspections

Other Inspection Task	QC Task	QC Doc.	QA Task	QA Doc.
Reduced beam section (RBS) requirements, if appliable - contour and finish - dimensional tolerances	P	D	P	D
Protected zone - no holes and unapproved attachments made by fabricator or erector, as applicable	P	D	P	D

The following entries are used in the tables:
- Observe (O) - The inspector shall observe these functions on a random, daily basis. Welding operations need not be delayed pending observations.
- Perform (P) - These inspections shall be performed prior to the final acceptance of the item. Where a task is noted to be performed by both OC and OA, it shall be permitted to coordinate the inspection function between QC and QA so that the inspection functions need be performed by only one party. Where QA is to rely upon inspection functions performed by QC, the approval of the engineer of record and the authority having jurisdiction is required.
- Document (D) - The inspector shall prepare reports indicating that the work has been performed in accordance with the contract documents. The report need not provide detailed measurements for joint fit-up, WPS settings, completed welds, or other individual items listed in the Tables of 8-a, 8-b, 8-c. For shop fabrication, the report shall indicate the piece mark of the piece inspected. For field work, the report shall indicate the reference gride lines and floor or elevation inspected. Work not in compliance with the contract documents and wether the noncompliance has been satisfactorilly repaired shall be noted in the inspection report.

TABLE 1705.6
REQUIRED VERIFICATION AND INSPECTION OF SOILS

VERIFICATION AND INSPECTION	CONT.	PER.
1. Verify materials below shallow foundations are adequate to achieve the design bearing capacity.		X
2. Verify excavations are extended to proper depth and have reached proper material.		X
3. Perform classification and testing of compacted fill materials.		X
4. Verify use of proper materials, densities and lift thicknesses during placement and compaction of controlled fill.	X	
5. Prior to placement of controlled fill, inspect subgrade and verify that site has been prepared properly.		X

STRUCTURAL TESTING FOR SEISMIC RESISTANCE

1. (1708.4 CBC) BASE METAL THICKER THAN 1.5 INCHES, WHERE SUBJECT TO THROUGH-THICKNESS WELD SHRINKAGE STRAINS, SHALL BE ULTRASONICALLY TESTED FOR DISCONTINUITIES BEHIND AND ADJACENT TO SUCH WELDS AFTER JOINT COMPLETION

STEEL NOTES

1. THE LABOR, MATERIALS & EXECUTION REQUIRED FOR ALL STEEL WORK AS INDICATED ON DRAWINGS SHALL BE IN ACCORDANCE WITH THOSE APPLICABLE SECTIONS OF CHAPTER 22 OF THE 2019 C.B.C.
2. STRUCTURAL STEEL & MISCELLANEOUS STEEL SHALL CONFORM TO A.S.T.M. A-36. PIPE COLUMNS SHALL CONFORM TO A.S.T.M. A-53 GRADE "B". BOLTS SHALL CONFORM TO A.S.T.M. SPECIFICATION A-307 FOR WOOD & A-325x FOR CONCRETE AND STEEL.
3. ALL WELDS SHALL BE DONE IN AN APPROVED SHOP IN ACCORDANCE WITH AWS D1.1-94. ALL FIELD WELDING SHALL BE PERFORMED BY A CERTIFIED WELDER & BE CONTINUOUSLY INSPECTED BY AN APPROVED DEPUTY INSPECTOR.
4. WELDING SHALL BE DONE BY ELECTRIC SHIELDED ARC PROCESS USING E-70XX ELECTRODES.
5. STRUCTURAL STEEL NOT ENCASED IN CONCRETE SHALL BE PAINTED WITH ONE COAT OF RED OXIDE PRIMER.
6. Wx SECTIONS OF STRUCTURAL STEEL FOR MOMENT FRAMES SHALL CONFORM WITH ASTM A-992.

STRUCTURAL OBSERVATION PROGRAM
AND DESIGNATION OF THE
STRUCTURAL OBSERVER

PROJECT ADDRESS: 2228 CAREFUL AVE. AGOURA HILLS PERMIT APPL. NO.:
Description of Work: RESIDENCE
Owner: MR.GENCHI & MS.ARMIJO Architect: CLEARLIGHT ARCH. Engineer: SHANE JUDD

STRUCTURAL OBSERVATION
(only checked items are required)
Firm or Individual to be responsible for the Structural Observation:
Name: ALL-TRADE Phone: 805-552-4000 Calif. Registration: C70991

FOUNDATION	WALL	FRAME	DIAPHRAGM
☐ Footing, Stem Walls, Piers	☐ Concrete	☐ Steel Moment Frame	☐ Concrete
☐ Mat Foundation	☐ Masonry	☐ Steel Braced Frame	☐ Masonry
☐ Caisson, Piles, Grade Beams	☐ Wood	☐ Concrete Moment Frame	☐ Wood
☐ Stepping/Retaining Foundation, Hillside Special Anchors	☐ Others:	☐ Masonry Wall Frame	☐ Others:
☐ Concrete Slab		☐ Others: CANT. COL.	

DECLARATION BY OWNER
I, the Owner of the project, declare that the above listed form or individual is hired BY ME to be the Structural Observer.

Signature Date

DECLARATION BY ARCHITECT OR ENGINEER OF RECORD (required if the Structural Observer is different from the Architect or Engineer of Record)

I, the Architect or Engineer of record for the project, declare that the above listed firm or individual is designated by me to be responsible for the Structural Observation.

Signature C70991 License No. 4/7/2020 Date

IN/Form.08 (Part 2) (Rev. 6/1/2005) www.ladbs.org

LAUTERBACH & ASSOCIATES
A R C H I T E C T S • I N C.
David C. Kesterson, Architect • Ilona Scott, Architect • Mark S. Pettit, Architect
300 MONTGOMERY AVENUE, OXNARD, CALIFORNIA 93036 | 805-988-0912 | FAX 805-981-4510 | www.la-arch.com

THESE DRAWINGS AND SPECIFICATIONS ARE THE PROPERTY AND COPYRIGHT OF LAUTERBACH & ASSOCIATES, ALL RIGHTS RESERVED, AND SHALL NOT BE USED ON ANY OTHER WORK OR PROJECT EXCEPT BY WRITTEN AGREEMENT WITH LAUTERBACH & ASSOCIATES. WRITTEN DIMENSIONS SHALL TAKE PRECEDENCE OVER SCALED DIMENSIONS AND SHALL BE VERIFIED ON THE JOB SITE, ANY DISCREPANCY SHALL BE BROUGHT TO THE NOTICE OF LAUTERBACH & ASSOCIATES PRIOR TO COMMENCEMENT OF ANY WORK.

CONCORD DRIVE APARTMENTS
2950 & 2956 CONCORD DRIVE
OXNARD, CA, 93036

CITY OF OXNARD HOUSING AUTHORITY
435 S. D STREET
OXNARD, CALIFORNIA 93030

NO	DESCRIPTION	DATE
1	SUBMIT	02-26-2020

ISSUE

JOB NO. 20-190209

DRAWN BY:
CHECKED BY:
PROJECT MANAGER:
PRINT DATE: 2/15/19 8:36:51 AM

GENERAL NOTES (CONT'D)

S-1.1

12"W X 12"D TIE FOOTING W/ (2)-#4 BARS T&B

(E) 12" X 24" FOOTING TO REMAIN V.I.F.

(N) 12" X 24" FOOTING W/ (2)-#4 BARS T&B

4X6 POST UNO

6X6 POST UNO

POST ABOVE

BEAM # IN CALCULATIONS

BEARING WALLS

NON-BEARING WALLS

BEARING WALLS ABOVE

8 / S-3.0 CALIFORNIA FRAMING

1. FOR TYPICAL CUTTING, NOTCHING, AND BORING SEE 1/S-3.0
2. FOR TYPICAL OPENING IN SHEAR PANELS SEE 9/S-3.0
3. FOR TYPICAL HOLD-DOWN STRAP AT UPPER FLOOR SEE 7/S-3.0
4. FOR TYPICAL TOP PLATE SPLICE SEE 2 THRU 6/S-3.0,
5. PROVIDE DBL 2x TRIMMER AT EACH END OF EACH HDR/BEAM UNO
6. SHEATHE ENTIRE EXTERIOR WITH 'B' SHEAR WALL MIN. UNO
7. ALL EXT. BEARING WALLS 2X6 @ 16" O.C. & INT. BEARING WALLS 2X6 @ 16" O.C. UNO
8. PROVIDE MIN. 1/4" GAP BETWEEN TOP PL AND BEAMS @ ALL NON-BEARING WALLS U.N.O
9. ALL STRAPS (MST W/ (2)-2X MIN., MSTI W/ TJI, ETC) BY SIMPSON STRONG-TIE MEET LARR #25713 AND ICC ESR #2105
10. ALL ANGLES (A35, LTP4, ETC) BY SIMPSON STRONG-TIE MEET LARR #25716 AND ICC ESR #3096
11. ALIGN RR OR FJ WITH DRAG STRAPS WHERE SPECIFIED. PROVIDE EDGE NAILING ALONG ENTIRE RR OR FJ
12. ALL 'Q' FASTENERS IMPLY SDS2.5 SCREWS TO BE USED
14. EPOXY USING SIMPSON SET-XP (ICC ESR #2508 AND LARR#25744)
15. A COPY OF THE LOS ANGELES REPORT AND/OR CONDITIONS OF LISTING SHALL BE MADE AVAILABLE AT THE JOB SITE

Diaphragm and Shear Wall Notes

1. Roof diaphragm nailing to be inspected before covering. Face grain of plywood shall be perpendicular to supports. Floor shall have tongue and groove or blocked panel edges. Plywood spans shall conform with Table 2304.8(1)
2. All diaphragm and shear wall nailing shall utilize common nails or galvanized box.

SHEAR WALL SCHEDULE [6]

(DOUBLE LETTER INDICATES TWO SIDED APPLICATION W/ 3/4" dia. A.B. @ 12" O.C. & A35 OR LTP4 @ 6" O.C.)

MARK	W.S.P [3]	EDGE NAILING [4]	ANCHOR BOLTS [5]	SILL NAILING @ UPPER FLOORS	ALLOWABLE SHEAR (plf) [6]	A35 OR LTP4 SPACING (MIN.)
A	15/32"	8d @ 6" o.c.	5/8" dia. @ 32" o.c.	16d @ 6" o.c.	200	32" O.C.
B	15/32"	10d @ 6" o.c.	5/8" dia. @ 24" o.c.	16d @ 4" o.c.	255	24" O.C.
C [1]	15/32"	10d @ 4" o.c.	5/8" dia. @ 16" o.c.	SDS 1/4"x6"@6"o.c. [2]	383	16" O.C.
D [1]	15/32"	10d @ 3" o.c.	5/8" dia. @ 16" o.c.	SDS 1/4"x6"@6"o.c. [2]	499	12" O.C.
E [1]	15/32"	10d @ 2" o.c.	5/8" dia. @ 16" o.c.	SDS 1/4"x6"@4"o.c. [2]	653	8" O.C.
#	EXISTING SHEAR WALL SHEATHING, NAILING AND HOLD DOWNS TO REMAIN U.N.O.					

1. 3x boundary & edge studs required. 3x pressure treated sill plate required against concrete. (For walls CC, DD, & EE, 3x sill plate required at upper floors.)
2. Simpson SDS 1/4"X6" screws staggered into 4x minimum.
3. Wood Structural Panel applied over studs spaced at 16" o.c. Use 5-ply STRUCT I plywood, PS1-09 or STRUCT I OSB, PS2-10.
4. Nailing at intermediate members to be spaced @ 12" O.C. Only common nails shall be used. (10d-0.148" dia., 8d-0.131" dia.) Nail guns using "clipped head" or "sinker" nails are not acceptable. Stagger nailing in top plates, boundary members, and edge members. Edge distance for nailing at 3x boundary and panel edges shall be 1/2" minimum.
5. Use 12" min. long anchor bolts extending 4-1/2" out of concrete min.
6. Based on 2016 chapter 23 of the CBC (reduced 25%)

HOLDOWN NOTES

1. All bolt holes shall be 1/8" (maximum) over-size at the connection of holdowns to posts. Inspectors to verify.
2. Holdown connection bolts/nuts shall be torqued 1/2 turn beyond finger tight or as required by manufacturer. Inspector shall verify by random inspection prior to covering walls.
3. Approved plate washers in lieu of cut washers to be used for plywood shear wall sill plate anchor bolts and for holdown connector bolts at shear walls.

MINIMUM SIZE FOR SQUARE PLATE WASHERS

BOLT SIZE	PLATE SIZE
5/8"	3"X3"X.229"
3/4"	3"X3"X.229"

FOUNDATION PAD SCHEDULE

PAD	SIZE	THK.	REBAR
A	2'-6"x2'-6"	x12"	4-#4 E.W.
B	3'-6"x3'-6"	x15"	4-#5 E.W.
C	4'-6"x4'-6"	x18"	6-#5 E.W.
D	5'-6"x5'-6"	x21"	6-#6 E.W.

(E) F.J. TO REMAIN U.N.O.

2X8 R.R. @ 16" O.C. U.N.O.

2X6 C.J. @ 16" O.C. U.N.O.

FLOOR SHEATHING

23/32" T&G STURD-1-FLOOR @ TILE PSR. 48/24

Nailing:

BOUNDARY	10 d @ 6 in. o.c.
EDGE	10 d @ 6 in. o.c.
FIELD	10 d @ 12 in. o.c.

1-1/8" T&G STURD-1-FLOOR U.N.O. PSR. 60/48

Nailing:

BOUNDARY	12 d @ 6 in. o.c.
EDGE	12 d @ 6 in. o.c.
FIELD	12 d @ 12 in. o.c.

ROOF SHEATHING

19/32" CDX PLYWOOD OR OSB PSR. 40/20

Nailing:

BOUNDARY	10 d @ 6 in. o.c.
EDGE	10 d @ 6 in. o.c.
FIELD	10 d @ 12 in. o.c.

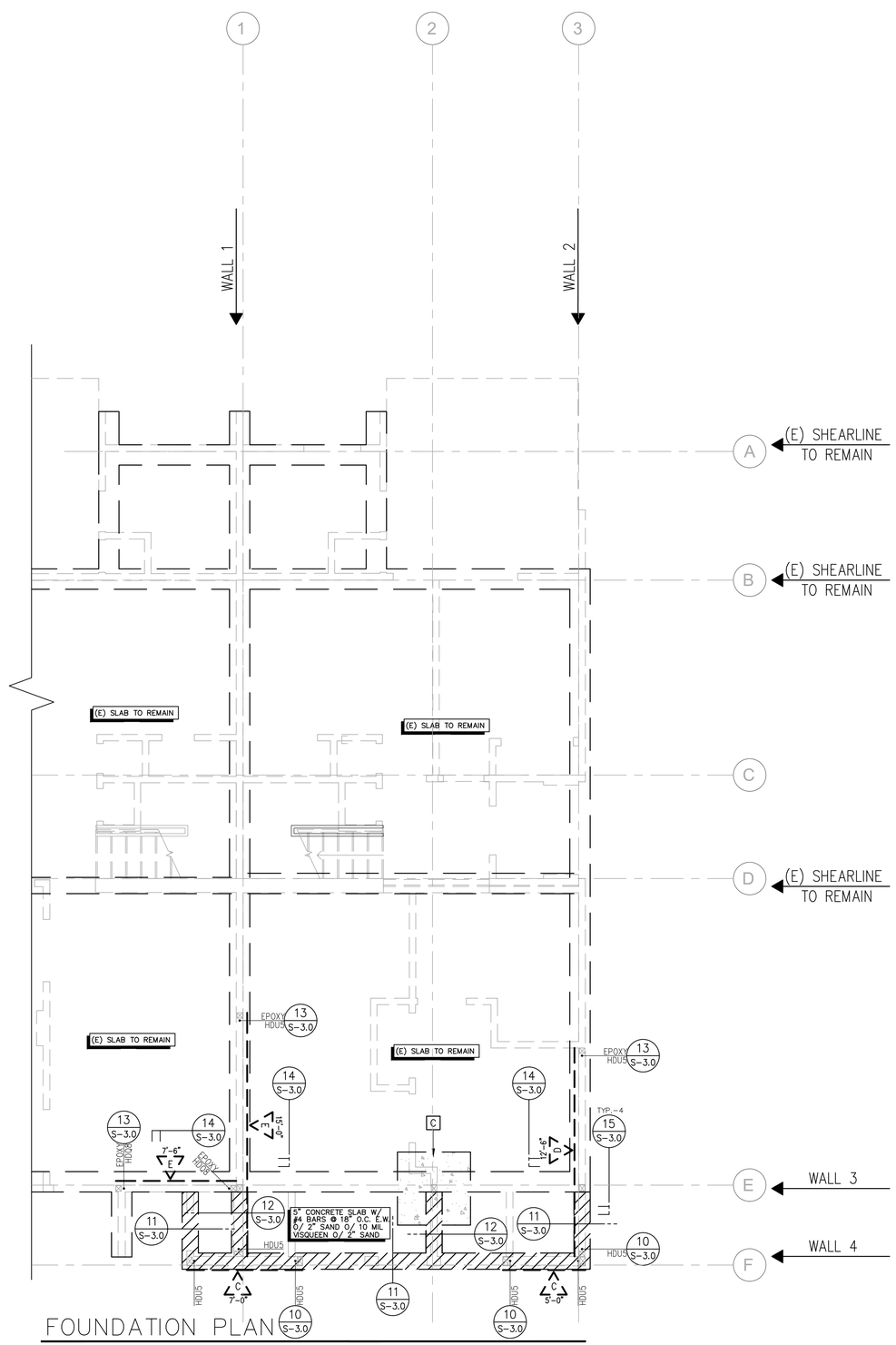

FOUNDATION PLAN

SCALE: 1/4"=1'-0"

LAUTERBACH & ASSOCIATES
ARCHITECTS INC.
David C. Kesterson, Architect • Ilona Scott, Architect • Mark S. Pettit, Architect
300 MONTGOMERY AVENUE, OXNARD, CALIFORNIA 93036 | 805-988-0912 | FAX 805-981-4510 | www.la-arch.com

REGISTERED PROFESSIONAL ENGINEER SHANE DENNIS MILLER No. M34632 STATE MECHANICAL OF CALIFORNIA

REGISTERED PROFESSIONAL ENGINEER SHANE DENNIS MILLER No. C70891 CIVIL STATE OF CALIFORNIA

CONCORD DRIVE APARTMENTS

2950 & 2956 CONCORD DRIVE
OXNARD, CA. 93036

CITY OF OXNARD HOUSING AUTHORITY

435 S. D STREET
OXNARD, CALIFORNIA 93030

NO	DESCRIPTION	DATE
1	SUBMIT	02-26-2020

ISSUE

JOB NO. 20-190209

DRAWN BY:
CHECKED BY:
PROJECT MANAGER:
PRINT DATE: 2/15/19 8:36:51 AM

FOUNDATION PLAN

S-2.0

THESE DRAWINGS AND SPECIFICATIONS ARE THE PROPERTY AND COPYRIGHT OF LAUTERBACH & ASSOCIATES. ALL RIGHTS RESERVED, AND SHALL NOT BE USED ON ANY OTHER WORK OR PROJECT EXCEPT BY WRITTEN AGREEMENT WITH LAUTERBACH & ASSOCIATES. WRITTEN DIMENSIONS SHALL TAKE PRECEDENCE OVER SCALED DIMENSIONS AND SHALL BE VERIFIED ON THE JOB SITE. ANY DISCREPANCY SHALL BE BROUGHT TO THE NOTICE OF LAUTERBACH & ASSOCIATES PRIOR TO COMMENCEMENT OF ANY WORK.

- 4X6 POST UNO
- 6X6 POST UNO
- POST ABOVE
- BEAM # IN CALCULATIONS
- BEARING WALLS
- NON-BEARING WALLS
- BEARING WALLS ABOVE

8 / S-3.0 CALIFORNIA FRAMING

1. FOR TYPICAL CUTTING, NOTCHING, AND BORING SEE 1/S-3.0
2. FOR TYPICAL OPENING IN SHEAR PANELS SEE 9/S-3.0
3. FOR TYPICAL HOLD-DOWN STRAP AT UPPER FLOOR SEE 7/S-3.0
4. FOR TYPICAL TOP PLATE SPLICE SEE 2 THRU 6/S-3.0,
5. PROVIDE DBL 2x TRIMMER AT EACH END OF EACH HDR/BEAM UNO
6. SHEATHE ENTIRE EXTERIOR WITH 'B' SHEAR WALL MIN. UNO
7. ALL EXT. BEARING WALLS 2X6 @ 16" O.C. & INT. BEARING WALLS 2X6 @ 16" O.C. UNO
8. PROVIDE MIN. 1/4" GAP BETWEEN TOP PL AND BEAMS @ ALL NON-BEARING WALLS U.N.O
9. ALL STRAPS (MST W/ (2)-2X MIN., MSTI W/ TJI, ETC) BY SIMPSON STRONG-TIE MEET LARR #25713 AND ICC ESR #2105
10. ALL ANGLES (A35, LTP4, ETC) BY SIMPSON STRONG-TIE MEET LARR #25716 AND ICC ESR #3096
11. ALIGN RR OR FJ WITH DRAG STRAPS WHERE SPECIFIED. PROVIDE EDGE NAILING ALONG ENTIRE RR OR FJ
12. ALL 'Q' FASTENERS IMPLY SDS2.5 SCREWS TO BE USED
14. EPOXY USING SIMPSON SET-XP (ICC ESR #2508 AND LARR#25744)
15. A COPY OF THE LOS ANGELES REPORT AND/OR CONDITIONS OF LISTING SHALL BE MADE AVAILABLE AT THE JOB SITE

Diaphragm and Shear Wall Notes

1. Roof diaphragm nailing to be inspected before covering. Face grain of plywood shall be perpendicular to supports. Floor shall have tongue and groove or blocked panel edges. Plywood spans shall conform with Table 2304.8(1)
2. All diaphragm and shear wall nailing shall utilize common nails or galvanized box.

SHEAR WALL SCHEDULE 6

(DOUBLE LETTER INDICATES TWO SIDED APPLICATION W/ 3/4" dia. A.B. @ 12" O.C. & A35 OR LTP4 @ 6" O.C.)

MARK	W.S.P 3	EDGE NAILING 4	ANCHOR BOLTS 5	SILL NAILING @ UPPER FLOORS	ALLOWABLE SHEAR (plf) 6	A35 OR LTP4 SPACING (MIN.)
A	15/32"	8d @ 6" o.c.	5/8" dia. @ 32" o.c.	16d @ 6" o.c.	200	32" O.C.
B	15/32"	10d @ 6" o.c.	5/8" dia. @ 24" o.c.	16d @ 4" o.c.	255	24" O.C.
C 1	15/32"	10d @ 4" o.c.	5/8" dia. @ 16" o.c.	SDS 1/4"x6"@6"o.c. 2	383	16" O.C.
D 1	15/32"	10d @ 3" o.c.	5/8" dia. @ 16" o.c.	SDS 1/4"x6"@6"o.c. 2	499	12" O.C.
E 1	15/32"	10d @ 2" o.c.	5/8" dia. @ 16" o.c.	SDS 1/4"x6"@4"o.c. 2	653	8" O.C.
#	EXISTING SHEAR WALL SHEATHING, NAILING AND HOLD DOWNS TO REMAIN U.N.O.					

1. 3x boundary & edge studs required. 3x pressure treated sill plate required against concrete. (For walls CC, DD, & EE, 3x sill plate required at upper floors.)
2. Simpson SDS 1/4"X6" screws staggered into 4x minimum.
3. Wood Structural Panel applied over studs spaced at 16" o.c. Use 5-ply STRUCT I plywood, PS1-09 or STRUCT I OSB, PS2-10.
4. Nailing at intermediate members to be spaced @ 12" O.C. Only common nails shall be used. (10d-0.148" dia., 8d-0.131" dia.) Nail guns using "clipped head" or "sinker" nails are not acceptable. Stagger nailing in top plates, boundary members, and edge members. Edge distance for nailing at 3x boundary and panel edges shall be 1/2" minimum.
5. Use 12" min. long anchor bolts extending 4-1/2" out of concrete min.
6. Based on 2016 chapter 23 of the CBC (reduced 25%)

HOLDOWN NOTES

1. All bolt holes shall be 1/8" (maximum) over-size at the connection of holdowns to posts. Inspectors to verify.
2. Holdown connection bolts/nuts shall be torqued 1/2 turn beyond finger tight or as required by manufacturer. Inspector shall verify by random inspection prior to covering walls.
3. Approved plate washers in lieu of cut washers to be used for plywood shear wall sill plate anchor bolts and for holdown connector bolts at shear walls.

MINIMUM SIZE FOR SQUARE PLATE WASHERS

BOLT SIZE	PLATE SIZE
5/8"	3"X3"X.229"
3/4"	3"X3"X.229"

(E) F.J. TO REMAIN U.N.O.

2X8 R.R. @ 16" O.C. U.N.O.

2X6 C.J. @ 16" O.C. U.N.O.

FLOOR SHEATHING

23/32" T&G STURD-1-FLOOR @ TILE PSR. 48/24

Nailing:

BOUNDARY	10 d @ 6 in. o.c.
EDGE	10 d @ 6 in. o.c.
FIELD	10 d @ 12 in. o.c.

1-1/8" T&G STURD-1-FLOOR U.N.O. PSR. 60/48

Nailing:

BOUNDARY	12 d @ 6 in. o.c.
EDGE	12 d @ 6 in. o.c.
FIELD	12 d @ 12 in. o.c.

ROOF SHEATHING

19/32" CDX PLYWOOD OR OSB PSR. 40/20

Nailing:

BOUNDARY	10 d @ 6 in. o.c.
EDGE	10 d @ 6 in. o.c.
FIELD	10 d @ 12 in. o.c.

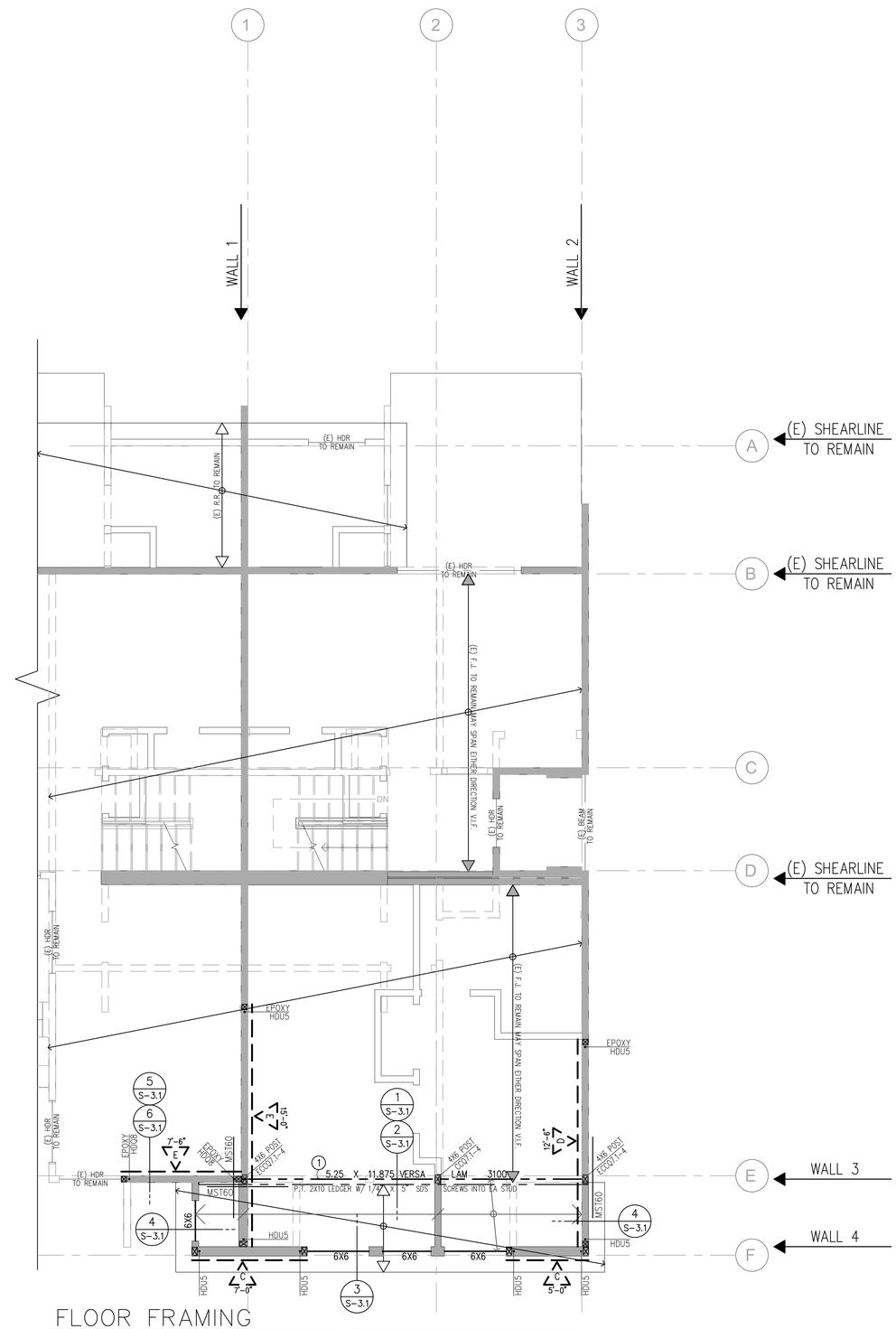

FLOOR FRAMING

SCALE: 1/4"=1'-0"

THESE DRAWINGS AND SPECIFICATIONS ARE THE PROPERTY AND COPYRIGHT OF LAUTERBACH & ASSOCIATES, ALL RIGHTS RESERVED, AND SHALL NOT BE USED ON ANY OTHER WORK OR PROJECT EXCEPT BY WRITTEN AGREEMENT WITH LAUTERBACH & ASSOCIATES. WRITTEN DIMENSIONS SHALL TAKE PRECEDENCE OVER SCALED DIMENSIONS AND SHALL BE VERIFIED ON THE JOB SITE. ANY DISCREPANCY SHALL BE BROUGHT TO THE NOTICE OF LAUTERBACH & ASSOCIATES PRIOR TO COMMENCEMENT OF ANY WORK.

LAUTERBACH & ASSOCIATES
ARCHITECTS INC.
David C. Kesterson, Architect • Ilona Scott, Architect • Mark S. Pettit, Architect
300 MONTGOMERY AVENUE, OXNARD, CALIFORNIA 93036 | 805-988-0912 | FAX 805-981-4510 | www.la-arch.com

REGISTERED PROFESSIONAL ENGINEER SHANE DENNIS No. M34632 MECHANICAL STATE OF CALIFORNIA

REGISTERED PROFESSIONAL ENGINEER SHANE DENNIS No. C70891 CIVIL STATE OF CALIFORNIA

CONCORD DRIVE APARTMENTS
2950 & 2956 CONCORD DRIVE
OXNARD, CA, 93036

CITY OF OXNARD HOUSING AUTHORITY
435 S. D STREET
OXNARD, CALIFORNIA 93030

NO	DESCRIPTION	DATE
1	SUBMIT	02-26-2020

ISSUE

JOB NO. 20-190209

DRAWN BY:
CHECKED BY:
PROJECT MANAGER:
PRINT DATE: 2/15/19 8:36:51 AM

FLOOR FRAMING PLAN

S-2.1

- 4X6 POST UNO
- 6X6 POST UNO
- POST ABOVE
- BEAM # IN CALCULATIONS
- BEARING WALLS
- NON–BEARING WALLS
- BEARING WALLS ABOVE

8 / S-3.0 — CALIFORNIA FRAMING

1. FOR TYPICAL CUTTING, NOTCHING, AND BORING SEE 1/S–3.0
2. FOR TYPICAL OPENING IN SHEAR PANELS SEE 9/S–3.0
3. FOR TYPICAL HOLD–DOWN STRAP AT UPPER FLOOR SEE 7/S–3.0
4. FOR TYPICAL TOP PLATE SPLICE SEE 2 THRU 6/S–3.0,
5. PROVIDE DBL 2x TRIMMER AT EACH END OF EACH HDR/BEAM UNO
6. SHEATHE ENTIRE EXTERIOR WITH 'B' SHEAR WALL MIN. UNO
7. ALL EXT. BEARING WALLS 2X6 @ 16" O.C. & INT. BEARING WALLS 2X6 @ 16" O.C. UNO
8. PROVIDE MIN. 1/4" GAP BETWEEN TOP PL AND BEAMS @ ALL NON–BEARING WALLS U.N.O
9. ALL STRAPS (MST W/ (2)–2X MIN., MSTI W/ TJI, ETC) BY SIMPSON STRONG–TIE MEET LARR #25713 AND ICC ESR #2105
10. ALL ANGLES (A35, LTP4, ETC) BY SIMPSON STRONG–TIE MEET LARR #25716 AND ICC ESR #3096
11. ALIGN RR OR FJ WITH DRAG STRAPS WHERE SPECIFIED. PROVIDE EDGE NAILING ALONG ENTIRE RR OR FJ
12. ALL 'Q' FASTENERS IMPLY SDS2.5 SCREWS TO BE USED
14. EPOXY USING SIMPSON SET–XP (ICC ESR #2508 AND LARR#25744)
15. A COPY OF THE LOS ANGELES REPORT AND/OR CONDITIONS OF LISTING SHALL BE MADE AVAILABLE AT THE JOB SITE

Diaphragm and Shear Wall Notes

1. Roof diaphragm nailing to be inspected before covering. Face grain of plywood shall be perpendicular to supports. Floor shall have tongue and groove or blocked panel edges. Plywood spans shall conform with Table 2304.8(1)
2. All diaphragm and shear wall nailing shall utilize common nails or galvanized box.

(E) F.J. TO REMAIN U.N.O.

2X8 R.R. @ 16" O.C. U.N.O.

2X6 C.J. @ 16" O.C. U.N.O.

FLOOR SHEATHING

23/32" T&G STURD–1–FLOOR @ TILE PSR. 48/24

Nailing:

BOUNDARY	10 d @ 6 in. o.c.
EDGE	10 d @ 6 in. o.c.
FIELD	10 d @ 12 in. o.c.

1–1/8" T&G STURD–1–FLOOR U.N.O. PSR. 60/48

Nailing:

BOUNDARY	12 d @ 6 in. o.c.
EDGE	12 d @ 6 in. o.c.
FIELD	12 d @ 12 in. o.c.

ROOF SHEATHING

19/32" CDX PLYWOOD OR OSB PSR. 40/20

Nailing:

BOUNDARY	10 d @ 6 in. o.c.
EDGE	10 d @ 6 in. o.c.
FIELD	10 d @ 12 in. o.c.

SHEAR WALL SCHEDULE [6]

(DOUBLE LETTER INDICATES TWO SIDED APPLICATION W/ 3/4" dia. A.B. @ 12" O.C. & A35 OR LTP4 @ 6" O.C.)

MARK	W.S.P [3]	EDGE NAILING [4]	ANCHOR BOLTS [5]	SILL NAILING @ UPPER FLOORS	ALLOWABLE SHEAR (plf) [6]	A35 OR LTP4 SPACING (MIN.)
A	15/32"	8d @ 6" o.c.	5/8" dia. @ 32" o.c.	16d @ 6" o.c.	200	32" O.C.
B	15/32"	10d @ 6" o.c.	5/8" dia. @ 24" o.c.	16d @ 4" o.c.	255	24" O.C.
C [1]	15/32"	10d @ 4" o.c.	5/8" dia. @ 16" o.c.	SDS 1/4"x6"@6"o.c. [2]	383	16" O.C.
D [1]	15/32"	10d @ 3" o.c.	5/8" dia. @ 16" o.c.	SDS 1/4"x6"@6"o.c. [2]	499	12" O.C.
E [1]	15/32"	10d @ 2" o.c.	5/8" dia. @ 16" o.c.	SDS 1/4"x6"@4"o.c. [2]	653	8" O.C.
#	EXISTING SHEAR WALL SHEATHING, NAILING AND HOLD DOWNS TO REMAIN U.N.O.					

1. 3x boundary & edge studs required. 3x pressure treated sill plate required against concrete. (For walls CC, DD, & EE, 3x sill plate required at upper floors.)
2. Simpson SDS 1/4"X6" screws staggered into 4x minimum.
3. Wood Structural Panel applied over studs spaced at 16" o.c. Use 5–ply STRUCT I plywood, PS1–09 or STRUCT I OSB, PS2–10.
4. Nailing at intermediate members to be spaced @ 12" O.C. Only common nails shall be used. (10d–0.148" dia., 8d–0.131" dia.) Nail guns using "clipped head" or "sinker" nails are not acceptable. Stagger nailing in top plates, boundary members, and edge members. Edge distance for nailing at 3x boundary and panel edges shall be 1/2" minimum.
5. Use 12" min. long anchor bolts extending 4–1/2" out of concrete min.
6. Based on 2016 chapter 23 of the CBC (reduced 25%)

HOLDOWN NOTES

1. All bolt holes shall be 1/8" (maximum) over–size at the connection of holdowns to posts. Inspectors to verify.
2. Holdown connection bolts/nuts shall be torqued 1/2 turn beyond finger tight or as required by manufacturer. Inspector shall verify by random inspection prior to covering walls.
3. Approved plate washers in lieu of cut washers to be used for plywood shear wall sill plate anchor bolts and for holdown connector bolts at shear walls.

MINIMUM SIZE FOR SQUARE PLATE WASHERS

BOLT SIZE	PLATE SIZE
5/8"	3"X3"X.229"
3/4"	3"X3"X.229"

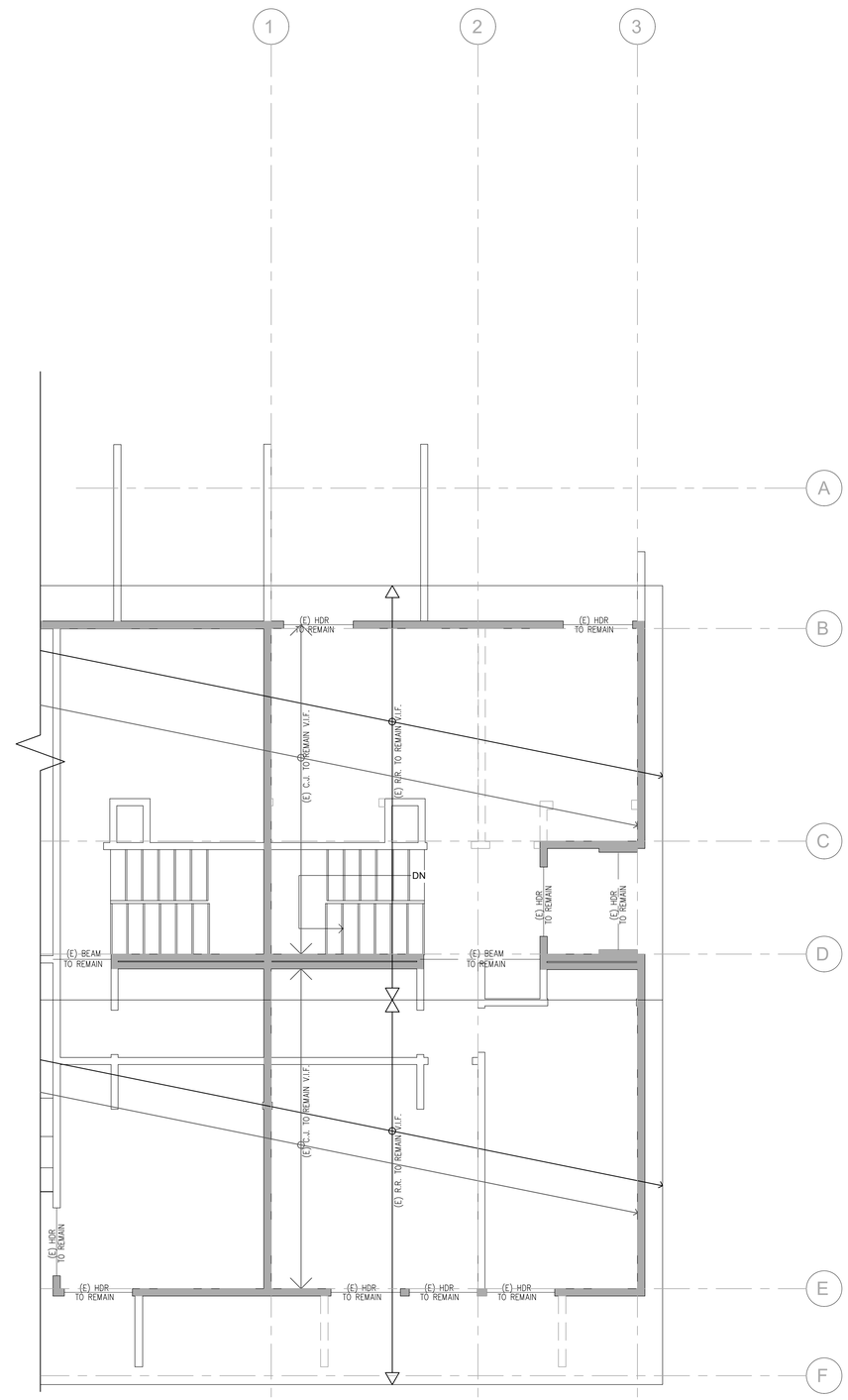

ROOF FRAMING PLAN

SCALE: 1/4"=1'–0"

LAUTERBACH & ASSOCIATES
ARCHITECTS INC.
David C. Kesterson, Architect • Ilona Scott, Architect • Mark S. Pettit, Architect
300 MONTGOMERY AVENUE, OXNARD, CALIFORNIA 93036 | 805-988-0912 | FAX 805-981-4510 | www.la-arch.com

REGISTERED PROFESSIONAL ENGINEER SHANE DENNIS STRUCTURAL No. M34632 STATE OF CALIFORNIA

REGISTERED PROFESSIONAL ENGINEER SHANE DENNIS No. C70591 CIVIL STATE OF CALIFORNIA

CONCORD DRIVE APARTMENTS
2950 & 2956 CONCORD DRIVE
OXNARD, CA, 93036

CITY OF OXNARD HOUSING AUTHORITY
435 S. D STREET
OXNARD, CALIFORNIA 93030

NO.	DESCRIPTION	DATE
1	SUBMIT	02-26-2020

ISSUE

JOB NO. 20-190209

DRAWN BY:
CHECKED BY:
PROJECT MANAGER:
PRINT DATE: 2/15/19 8:36:51 AM

ROOF FRAMING PLAN

S-2.2

THESE DRAWINGS AND SPECIFICATIONS ARE THE PROPERTY AND COPYRIGHT OF LAUTERBACH & ASSOCIATES. ALL RIGHTS RESERVED, AND SHALL NOT BE USED ON ANY OTHER WORK OR PROJECT EXCEPT BY WRITTEN AGREEMENT WITH LAUTERBACH & ASSOCIATES. WRITTEN DIMENSIONS SHALL TAKE PRECEDENCE OVER SCALED DIMENSIONS AND SHALL BE VERIFIED ON THE JOB SITE. ANY DISCREPANCY SHALL BE BROUGHT TO THE NOTICE OF LAUTERBACH & ASSOCIATES PRIOR TO COMMENCEMENT OF ANY WORK.

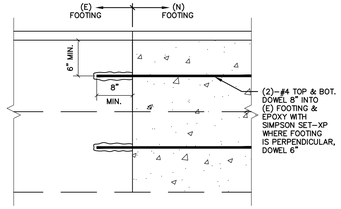

DEPUTY INSPECTION REQ'D FOR EPOXY WORK

15 SCALE: NTS

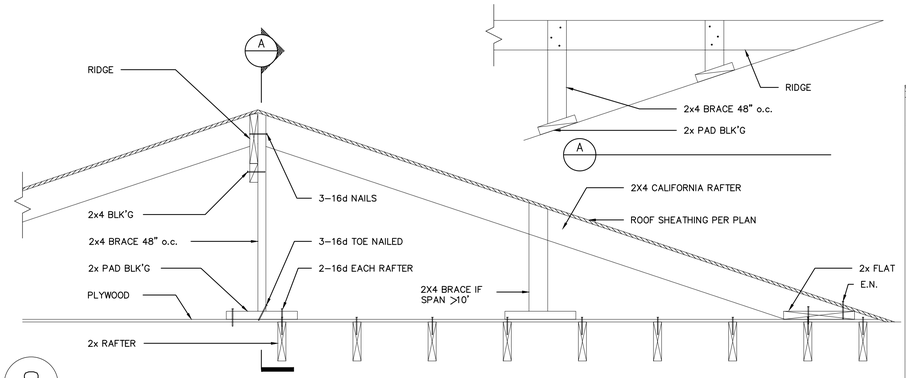

8 SCALE: NTS

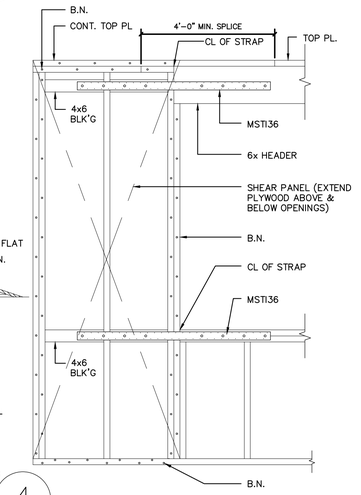

4 SCALE: NTS

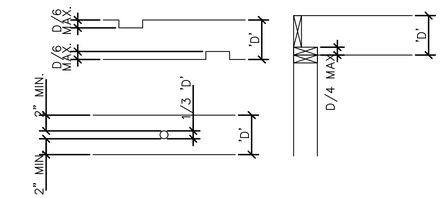

NOTCHING & BORING FLOOR JOISTS (CBC 2308.4.2.4)
(NOTCHING NOT PERMITTED IN MIDDLE 1/3 OF JOIST SPAN)

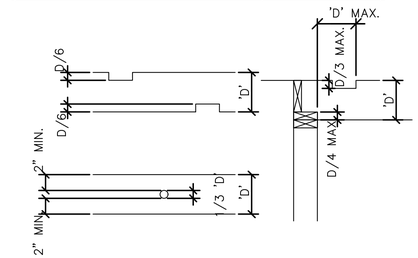

NOTCHING & BORING RAFTERS & CEILING JOISTS (CBC 2308.7.4)
(NOTCHING NOT PERMITTED IN MIDDLE 1/3 OF RAFTER OR JOIST SPAN)

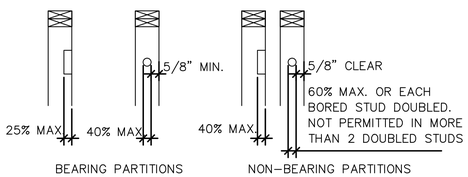

NOTCHING AND BORING WALL STUDS (CBC 2308.5.9/2308.5.10)

1 SCALE: NTS

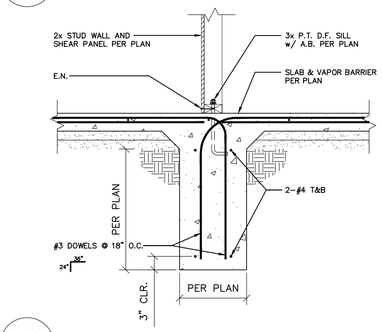

12 SCALE: NTS

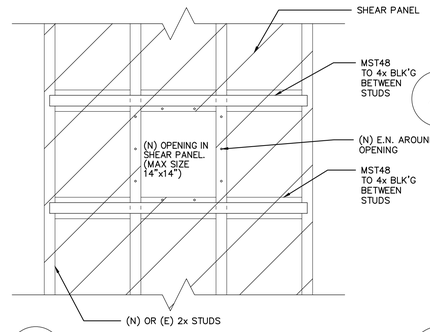

9 SCALE: NTS

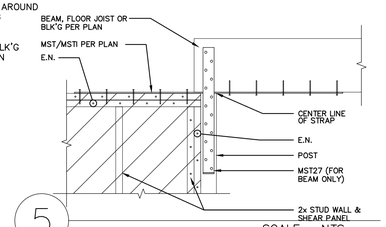

5 SCALE: NTS

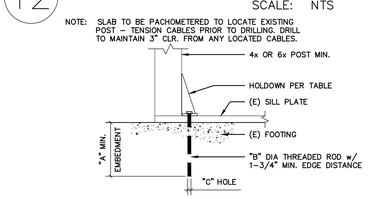

NOTE: SLAB TO BE PACHOMETERED TO LOCATE EXISTING POST – TENSION CABLES PRIOR TO DRILLING. DRILL TO MAINTAIN 3" CLR. FROM ANY LOCATED CABLES.

HOLDOWN	"A"	"B"	"C"	"D"
HDU2/ HDU5	12"	5/8"	3/4"	4685#
HDQ8	15"	7/8"	1"	8325#
HHDQ11	18"	1"	1–1/8"	11445#
HHDQ14	18"	1"	1–1/8"	14700#

USE "SIMPSON" SET–XP ADHESIVE SYSTEM w/ 2000 p.s.i. EXISTING CONCRETE. ALLOWABLE TENSILE LOADS = "D". (I.C.C. REPORT #2508)

DEPUTY INSPECTION REQ'D FOR ALL EPOXY WORK

13 SCALE: NTS

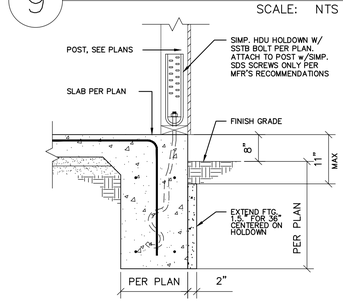

10 SCALE: NTS

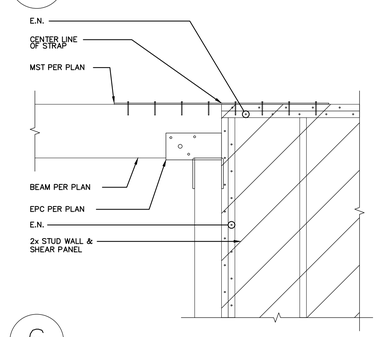

6 SCALE: NTS

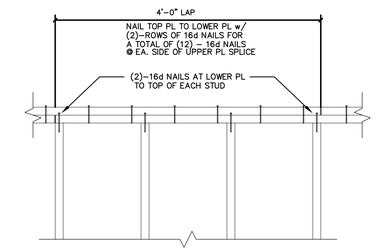

2 SCALE: NTS

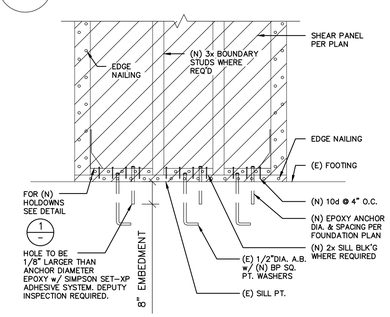

USE "SIMPSON" SET–XP ADHESIVE SYSTEM w/ 2000 p.s.i.
LARR #25744 (DEPUTY INSPECTION REQUIRED FOR EPOXY WORK)

14 SCALE: NTS

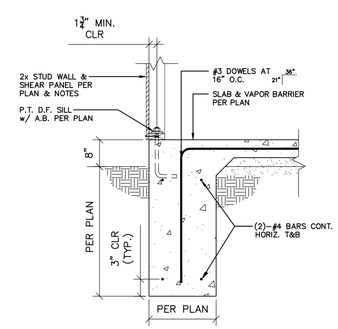

11 SCALE: NTS

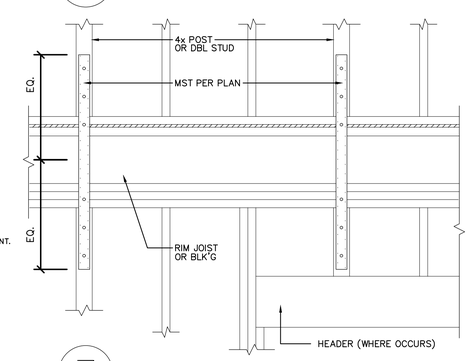

7 SCALE: NTS

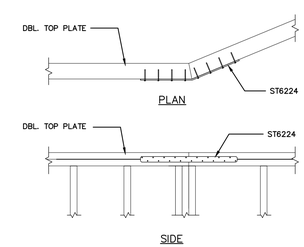

3 SCALE: NTS

THESE DRAWINGS AND SPECIFICATIONS ARE THE PROPERTY AND COPYRIGHT OF LAUTERBACH & ASSOCIATES. ALL RIGHTS RESERVED, AND SHALL NOT BE USED ON ANY OTHER WORK OR PROJECT EXCEPT BY WRITTEN AGREEMENT WITH LAUTERBACH & ASSOCIATES. WRITTEN DIMENSIONS SHALL TAKE PRECEDENCE OVER SCALED DIMENSIONS AND SHALL BE VERIFIED ON THE JOB SITE. ANY DISCREPANCY SHALL BE BROUGHT TO THE NOTICE OF LAUTERBACH & ASSOCIATES PRIOR TO COMMENCEMENT OF ANY WORK.

LAUTERBACH & ASSOCIATES
ARCHITECTS INC.
David C. Kesterson, Architect • Ilona Scott, Architect • Mark S. Pettit, Architect
300 MONTGOMERY AVENUE, OXNARD, CALIFORNIA 93036 | 805-988-0912 | FAX 805-981-4510 | www.la-arch.com

REGISTERED PROFESSIONAL ENGINEER SHANE DENNIS No. M34632 MECHANICAL STATE OF CALIFORNIA

REGISTERED PROFESSIONAL ENGINEER SHANE DENNIS No. C70891 CIVIL STATE OF CALIFORNIA

CONCORD DRIVE APARTMENTS
2950 & 2956 CONCORD DRIVE
OXNARD, CA, 93036

CITY OF OXNARD HOUSING AUTHORITY
435 S. D STREET
OXNARD, CALIFORNIA 93030

NO	DESCRIPTION	DATE
1	SUBMIT	02-26-2020

ISSUE

JOB NO. 20-190209

DRAWN BY:
CHECKED BY:
PROJECT MANAGER:
PRINT DATE: 2/15/19 8:36:51 AM

STRUCTURAL DETAILS

S-3.0

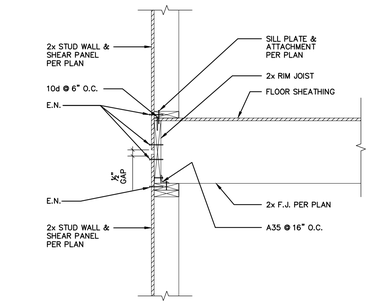

5 SCALE: NTS

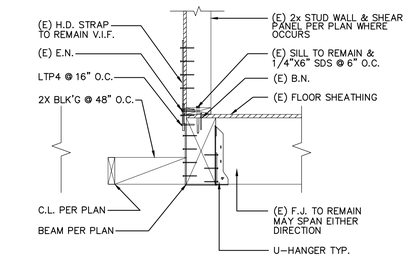

1 SCALE: NTS

13 SCALE: NTS

9 SCALE: NTS

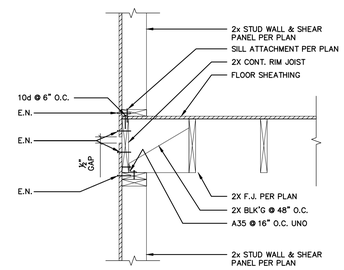

6 SCALE: NTS

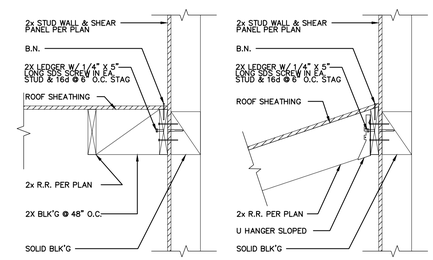

2 SCALE: NTS

14 SCALE: NTS

10 SCALE: NTS

6 SCALE: NTS

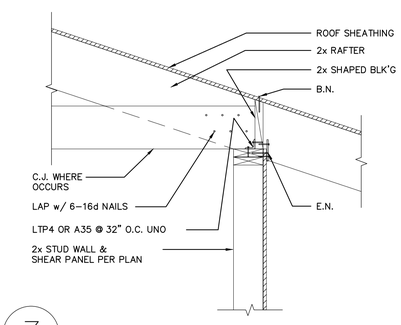

3 SCALE: NTS

15 SCALE: NTS

11 SCALE: NTS

7 SCALE: NTS

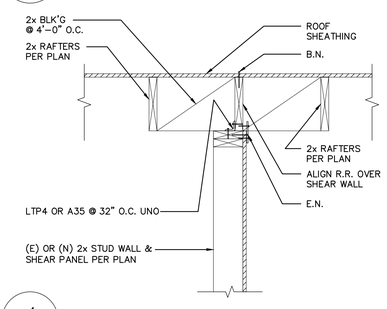

4 SCALE: NTS

16 SCALE: NTS

12 SCALE: NTS

8 SCALE: NTS

THESE DRAWINGS AND SPECIFICATIONS ARE THE PROPERTY AND COPYRIGHT OF LAUTERBACH & ASSOCIATES, ALL RIGHTS RESERVED, AND SHALL NOT BE USED ON ANY OTHER WORK OR PROJECT EXCEPT BY WRITTEN AGREEMENT WITH LAUTERBACH & ASSOCIATES. WRITTEN DIMENSIONS SHALL TAKE PRECEDENCE OVER SCALED DIMENSIONS AND SHALL BE VERIFIED ON THE JOB SITE. ANY DISCREPANCY SHALL BE BROUGHT TO THE NOTICE OF LAUTERBACH & ASSOCIATES PRIOR TO COMMENCEMENT OF ANY WORK.

LAUTERBACH & ASSOCIATES
ARCHITECTS INC.
David C. Kesterson, Architect • Ilona Scott, Architect • Mark S. Pettit, Architect
300 MONTGOMERY AVENUE, OXNARD, CALIFORNIA 93036 | 805-988-0912 | FAX 805-981-4510 | www.la-arch.com

REGISTERED PROFESSIONAL ENGINEER SHANE DENNIS No. M34632 MECHANICAL STATE OF CALIFORNIA

REGISTERED PROFESSIONAL ENGINEER SHANE DENNIS No. C78991 CIVIL STATE OF CALIFORNIA

CONCORD DRIVE APARTMENTS
2950 & 2956 CONCORD DRIVE
OXNARD, CA. 93036

CITY OF OXNARD HOUSING AUTHORITY
435 S. D STREET
OXNARD, CALIFORNIA 93030

NO	DESCRIPTION	DATE
1	SUBMIT	02-26-2020

ISSUE

JOB NO. 20-190209

DRAWN BY:
CHECKED BY:
PROJECT MANAGER:
PRINT DATE: 2/15/19 8:36:51 AM

STRUCTURAL DETAILS (CONT'D)

S-3.1

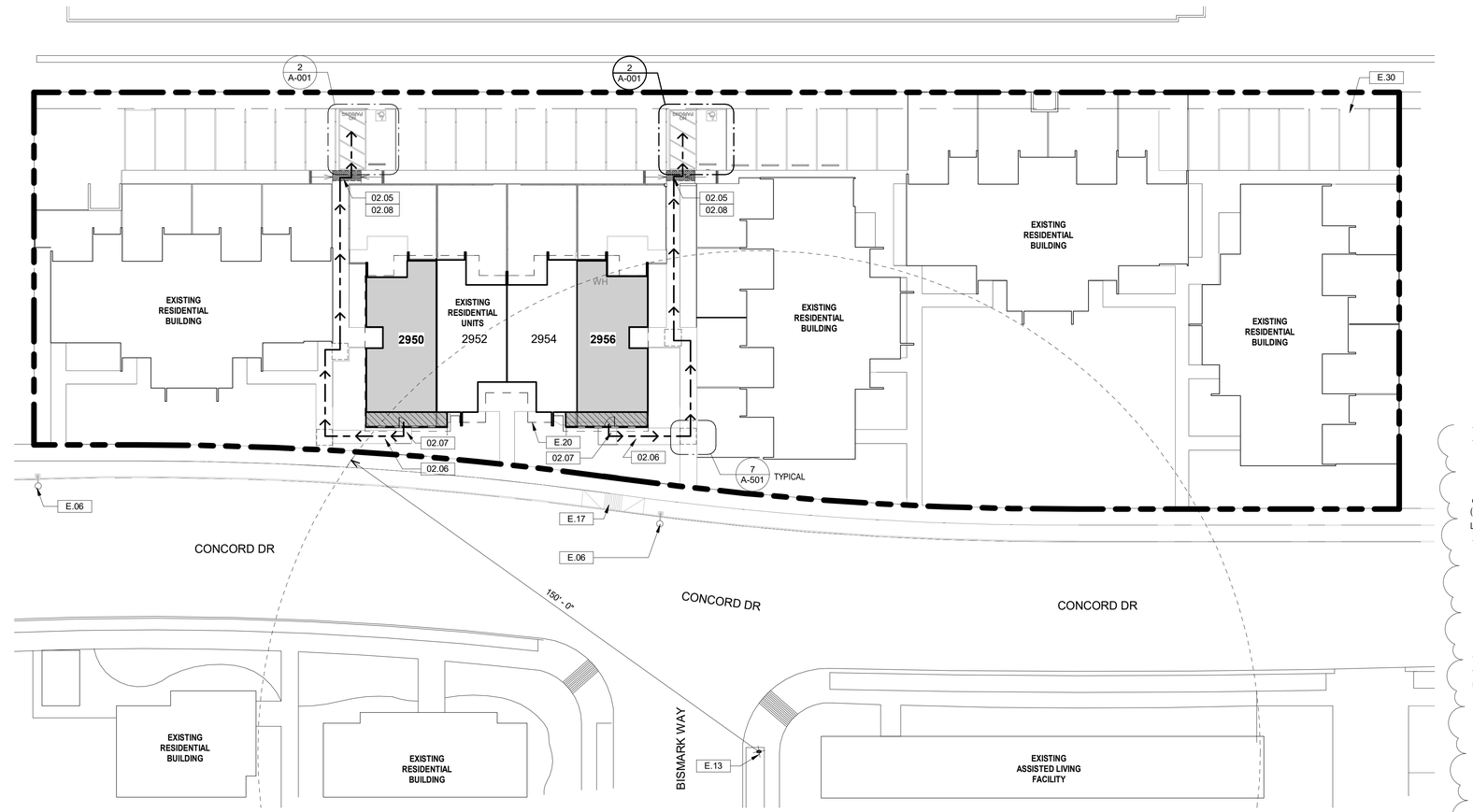

1 CD - Site Plan
1" = 20'-0"

0 10' 20' 40'

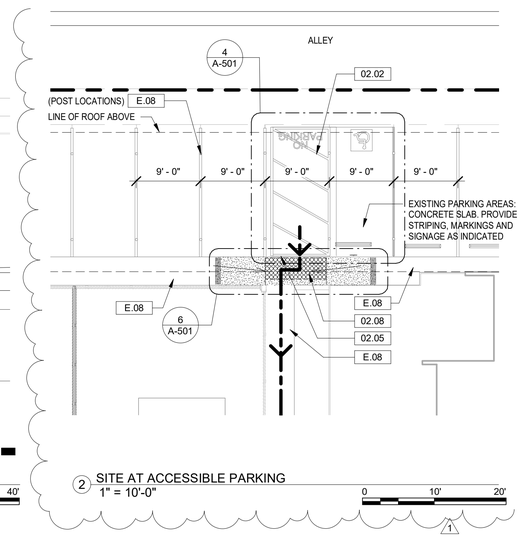

2 SITE AT ACCESSIBLE PARKING
1" = 10'-0"

0 10' 20'

KEYNOTES - EXISTING TO REMAIN

E.06	EXISTING STREET LIGHT
E.08	EXISTING SIDEWALK
E.13	EXISTING FIRE HYDRANT AND 150' RADIUS
E.17	EXISTING CURB RAMP
E.20	EXISTING ROOF
E.30	EXISTING CARPORT WITH 3" METAL POST 9'- 0" O.C.

KEYNOTES

02.02	PARKING SPACE AND VAN ACCESSIBLE RAMP: ACCESS COMPLIANT, SEE 4 & 5/A-501
02.05	ACCESSIBLE CURB RAMP
02.06	SLOPED WALK NOT TO EXCEED 5% SLOPE
02.07	LANDING LESS THAN 2% SLOPE IN ALL DIRECTIONS
02.08	TRUNCATED DOMES (SEE DETAIL 6/A-501)

SYMBOL LEGEND

PATH OF TRAVEL

NEW ADDITION AREA

UNIT TO BE MODIFIED

GENERAL NOTES

1. EXISTING CONCRETE SLAB AT CARPORT TO BE REPAIRED AS REQUIRED TO PROVIDE ADEQUATE SURFACE FOR ACCESSIBLE PARKING AND LOADING AREA.
2. ACCESSIBLE SPACE AND LOADING AREA TO BE STRIPED AND PAINTED AS REQUIRED (DETAIL 4/A-501)
3. EXISTING PATH OF TRAVEL AS INDICATED FROM RESIDENTIAL UNIT ENTRY TO DESIGNATED PARKING AND PUBLIC WAY DOES NOT EXCEED 5% SLOPE IN DIRECTION OF TRAVEL, DOES NOT EXCEED 2% CROSS SLOPE. VERIFY
4. MODIFICATIONS TO EXISTING BACKFLOW PREVENTER TO BE DESIGN-BUILD BY CONTRACTOR, INCLUDING NEW OR RELOCATION OF BFP, DETERMINATION OF NEW LOCATION , AND CONNECTIONS TO EXISTING SYSTEM.

LAUTERBACH & ASSOCIATES
ARCHITECTS INC.
David C. Kesterson, Architect • Ilona Scott, Architect • Mark S. Pettit, Architect
300 MONTGOMERY AVENUE, OXNARD, CALIFORNIA 93036 | 805-988-0912 | FAX 805-981-4510 | www.la-arch.com

LICENSED ARCHITECT
ILONA SCOTT
No. C11881
Ren. 06/21
STATE OF CALIFORNIA

CONCORD DRIVE APARTMENTS

2950 & 2956 CONCORD DRIVE
OXNARD, CA, 93036

CITY OF OXNARD HOUSING AUTHORITY

435 S. D STREET
OXNARD, CALIFORNIA 93030

NO	DESCRIPTION	DATE
1	PLAN CHECK SUBMITTAL	08/05/2020

ISSUE

JOB NO.	20-190708
DRAWN BY:	TJL
CHECKED BY:	ISS
PROJECT MANAGER:	ISS
PRINT DATE:	8/11/2020 1:53:19 PM

SITE PLAN

A-001

THESE DRAWINGS AND SPECIFICATIONS ARE THE PROPERTY AND COPYRIGHT OF LAUTERBACH & ASSOCIATES. ALL RIGHTS RESERVED, AND SHALL NOT BE USED ON ANY OTHER WORK OR PROJECT EXCEPT BY WRITTEN AGREEMENT WITH LAUTERBACH & ASSOCIATES. WRITTEN DIMENSIONS SHALL TAKE PRECEDENCE OVER SCALED DIMENSIONS AND SHALL BE VERIFIED ON THE JOB SITE. ANY DISCREPANCY SHALL BE BROUGHT TO THE NOTICE OF LAUTERBACH & ASSOCIATES PRIOR TO COMMENCEMENT OF ANY WORK.

G:\2019 Projects\20-190708 City of Oxnard\Set 4-Concord\Drawings\Architectural\2950 & 2956 Concord Drive - CD (Site and Elevs).rvt

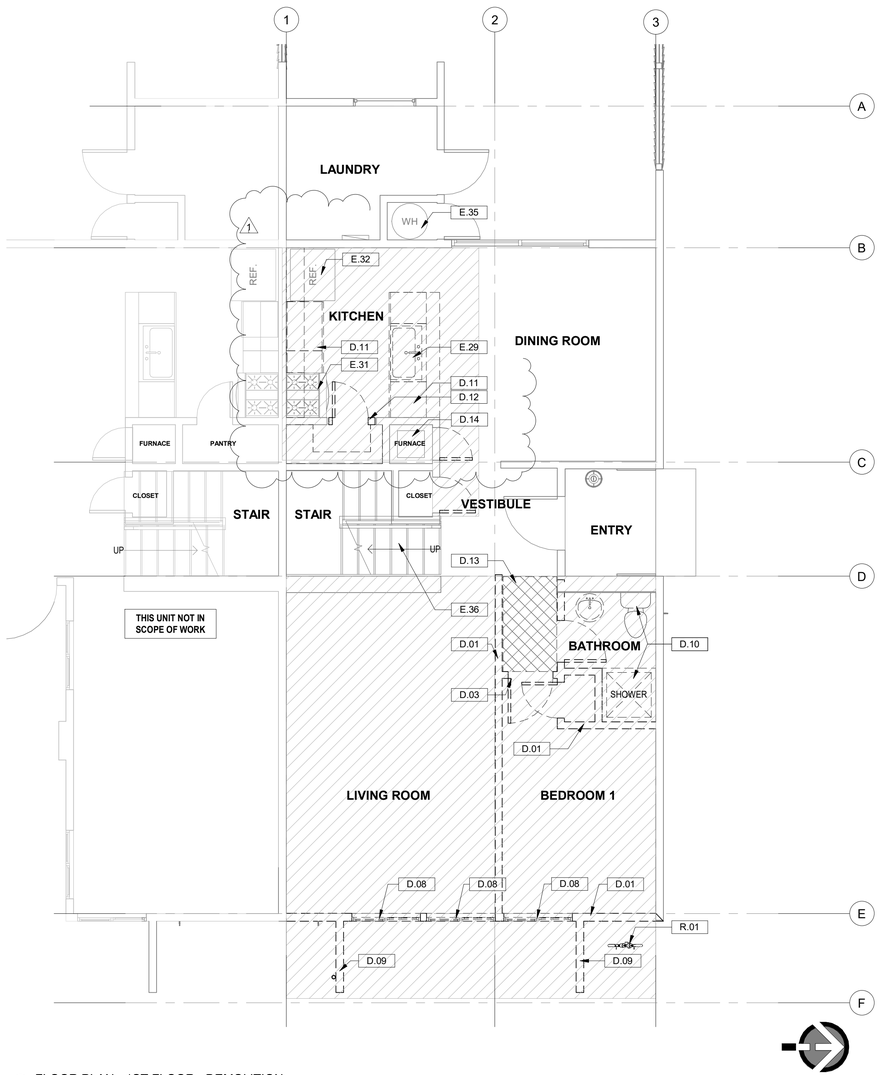

1 FLOOR PLAN - 1ST FLOOR - DEMOLITION
1/4" = 1'-0"

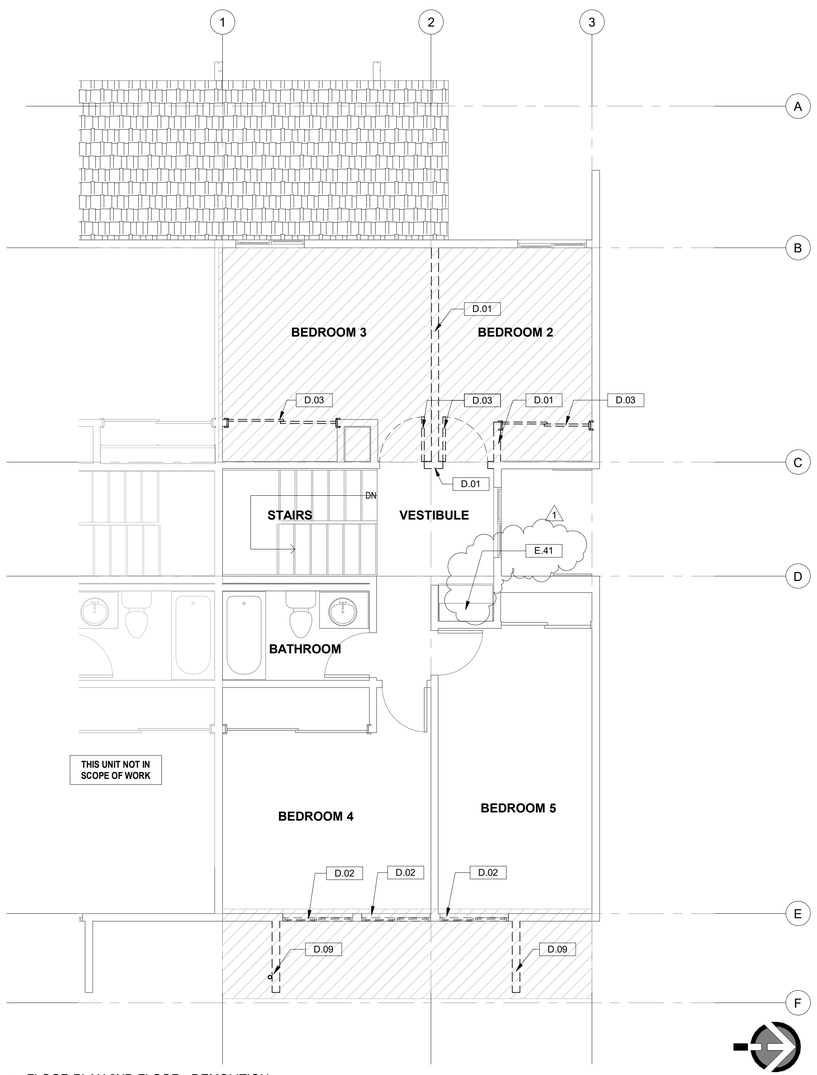

2 FLOOR PLAN 2ND FLOOR - DEMOLITION
1/4" = 1'-0"

KEYNOTES - EXISTING TO REMAIN

E.29	EXISTING KITCHEN SINK (PROTECT AND STORE FOR CLIENT'S RE-USE)
E.31	EXISTING STOVE: (PROTECT AND STORE FOR CLIENT'S RE-USE)
E.32	EXISTING REFRIGERATOR: (PROTECT AND STORE FOR CLIENT'S RE-USE)
E.35	EXISTING WATER HEATER
E.36	EXISTING STAIRS AND RAILING
E.41	EXISTING BUILT-IN UPPER AND LOWER CABINETS

KEYNOTES - RELOCATE EXISTING

R.01	RELOCATE EXISTING BACKFLOW DEVICE

KEYNOTES - DEMOLITION

D.01	DEMOLISH EXISTING WALL, TYP.
D.02	DEMOLISH EXISTING WINDOW
D.03	DEMOLISH EXISTING DOOR AND FRAME
D.08	DEMOLISH EXISTING WINDOW AND PORTION OF WALL TO ALLOW FOR EXPANSION
D.09	DEMOLISH EXISTING WING WALL
D.10	DEMOLISH EXISTING SHOWER, TOILET AND VANITY
D.11	DEMOLISH EXISTING UPPER AND LOWER CABINETS AND COUNTER
D.12	DEMOLISH PORTION OF EXISTING WALL
D.13	DEMOLISH PORTION OF EXISTING SOFFIT AT NEW ACCESSIBLE UNIT
D.14	DEMOLISH EXISTING FORCED AIR FURNACE TO ALLOW FOR INSTALLATION OF NEW FORCED AIR FURNACE

GENERAL DEMOLITION NOTES

1. IT IS THE RESPONSIBILITY OF THE CONTRACTOR TO VERIFY ALL CLEARANCES AND INSTALLATION REQUIREMENTS OF CONSTRUCTION ITEMS AGAINST EXISTING CONDITIONS AND DISPOSE OF REMOVED MATERIALS PER THE ORDINANCE.
2. THE CITY OF OXNARD HOUSING AUTHORITY SHALL HAVE THE FIRST RIGHT OF SALVAGE OF ITEMS SHOWN FOR DEMOLITION.
3. SEE MECH., ELEC., AND PLUMB. DWG'S FOR ADDITIONAL DEMOLITION NOTES AND CORRECT LAYOUT FOR SAWCUTS.
4. VERIFY ALL EXISTING DOORS TO BE REMOVED WITH PROPOSED REPLACEMENT DOOR ASSEMBLIES FOR SUFFICIENT CLEARANCE AND FRAMING REQUIREMENTS. DEMOLISH PORTIONS OF EXISTING WALL FRAMING AS REQ'D AND PROVIDE NEW FRAMING PER DETAILS WHERE REQUIRED. SEE DOOR SCHEDULE.
5. REMOVE EXISTING FLOOR FINISHES, MASTICS, ETC. DOWN TO EXISTING SLAB OR PLYWOOD FLOOR WHERE NEW FINISHES ARE INDICATED. PROVIDE PATCHING AND REFINISHING OF THE SURFACES PER MANUFACTURER'S SPECIFICATIONS FOR THE NEW FINISHES SELECTED TO INSURE PROPER INSTALLATION OF NEW FINISHES.
6. FOR EXISTING WALLS TO REMAIN, INSPECT FOR DAMAGE OF ANY KIND; REPLACE DAMAGED MATERIALS WITH NEW BEFORE NEW GYPSUM WALL BOARD IS APPLIED.
7. WHERE EXISTING PLUMBING AND OTHER UTILITIES ARE TO BE REMOVED, CAP ALL ABANDONED PIPING BELOW FINISH FLOOR AND WITHIN WALL, TYP. PRESERVE EXISTING ROUGH PLUMBING WHERE NECESSARY FOR RECONNECTION. SEE PLUMBING DRAWINGS.
8. EXISTING ITEMS TO REMAIN SHALL BE PROTECTED DURING DEMOLITION, OR TEMPORARILY REMOVED AND REPLACED AT CONTRACTOR'S OPTION.
9. PROTECT DURING DEMOLITION ANY STRUCTURAL ELEMENT TO REMAIN.
10. REMOVE EXISTING EXTERIOR PLASTER FINISHES AS REQUIRED. PROTECT EXISTING STRUCTURE FROM WEATHER OTHER DAMAGE DURING CONSTRUCTION, AND RESTORE MOISTURE PROTECTION SYSTEMS PRIOR TO INSTALLATION OF NEW PLASTER FINISHES.

NOTES:

1. DEMOLITION INCLUDES:
   A. REMOVAL OF GYP. BOARD CEILING AT FIRST FLOOR (ABOVE ACCESS COMPLIANT UNIT ONLY)
   B. REMOVAL OF DRYWALL ON THE WALLS, INSULATION INSTALLATION.
   C. REMOVAL OF FLOOR FINISHES TO SLAB AND PLYWOOD.
   D. ALERT ARCHITECT IF DAMAGE OR ROT IS FOUND.
2. FOR INTERIOR AND EXTERIOR TRENCHING LOCATIONS TO INSTALL UTILITIES, COORDINATE ARCHITECTURAL, STRUCTURAL, ELECTRICAL AND PLUMBING INFORMATION. VERIFY EXISTING UNDERGROUND CONDITIONS CURRENTLY UNKNOWN AND NOTIFY ARCHITECTS IF CONFLICTS ARE FOUND.
3. REFER TO SHEET A-201 FOR DEMOLITION ELEVATIONS

LEGEND

	DEMOLISH WALL
	DEMOLISH SOFFIT
	AREA OF WORK

LAUTERBACH & ASSOCIATES
ARCHITECTS INC.
David C. Kesterson, Architect • Ilona Scott, Architect • Mark S. Pettit, Architect
300 MONTGOMERY AVENUE, OXNARD, CALIFORNIA 93036 | 805-988-0912 | FAX 805-981-4510 | www.la-arch.com

LICENSED ARCHITECT ILONA SCOTT No. C11881 Ren. 06/21 STATE OF CALIFORNIA

CONCORD DRIVE APARTMENTS

2950 & 2956 CONCORD DRIVE
OXNARD, CA, 93036

CITY OF OXNARD HOUSING AUTHORITY

435 S. D STREET
OXNARD, CALIFORNIA 93030

NO	DESCRIPTION	DATE
1	PLAN CHECK SUBMITTAL	07/31/2020

ISSUE

JOB NO. 20-190209

DRAWN BY: TJL
CHECKED BY: ISS
PROJECT MANAGER: ISS
PRINT DATE: 8/10/2020 8:54:30 AM

DEMO FLOOR PLANS - 1ST & 2ND

A-100

THESE DRAWINGS AND SPECIFICATIONS ARE THE PROPERTY AND COPYRIGHT OF LAUTERBACH & ASSOCIATES. ALL RIGHTS RESERVED, AND SHALL NOT BE USED ON ANY OTHER WORK OR PROJECT EXCEPT BY WRITTEN AGREEMENT WITH LAUTERBACH & ASSOCIATES. WRITTEN DIMENSIONS SHALL TAKE PRECEDENCE OVER SCALED DIMENSIONS AND SHALL BE VERIFIED ON THE JOB SITE. ANY DISCREPANCY SHALL BE BROUGHT TO THE NOTICE OF LAUTERBACH & ASSOCIATES PRIOR TO COMMENCEMENT OF ANY WORK.

G:\2019 Projects\20-190708 City of Oxnard Set 4-Concord\Drawings\Architectural\2950 & 2956 Concord Drive - CD (Floor Plans).rvt

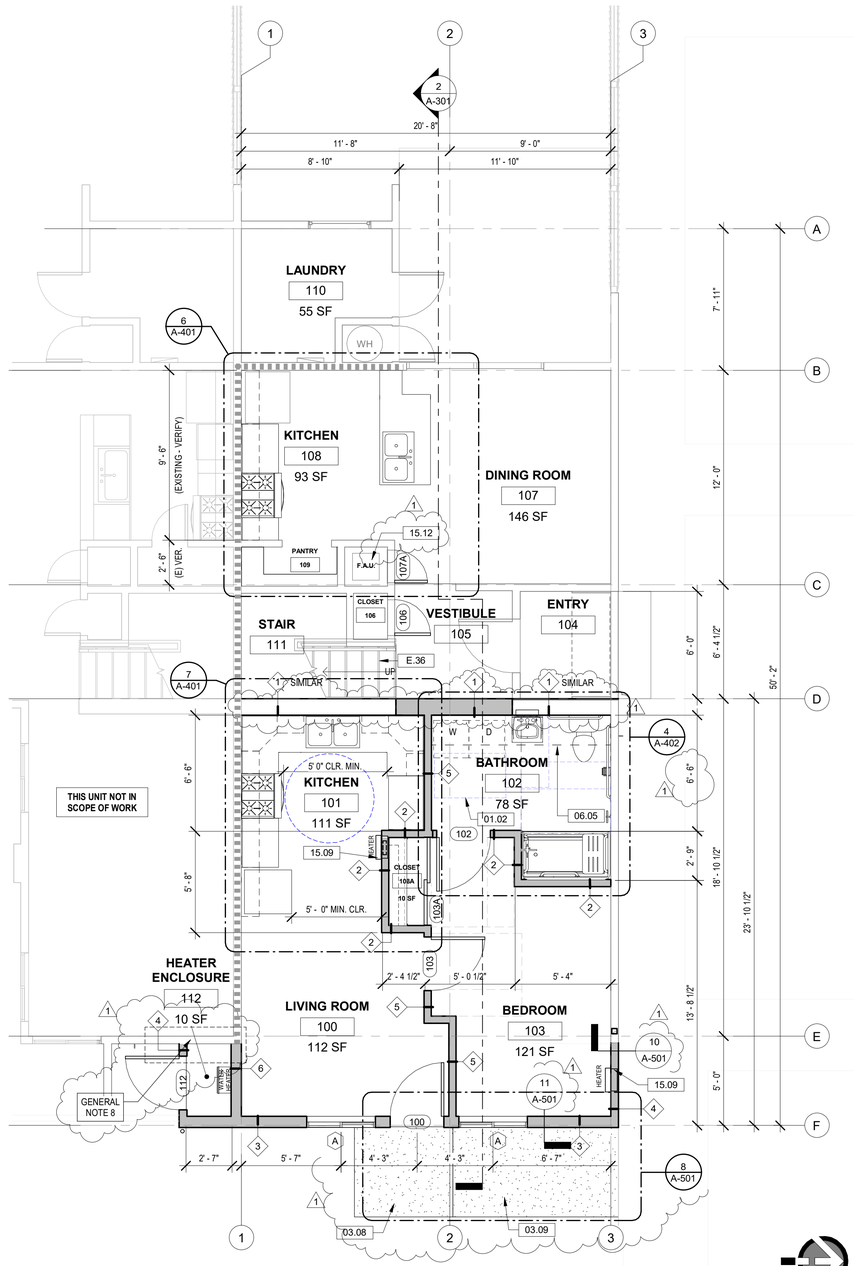

1 FLOOR PLAN - FIRST - PROPOSED
1/4" = 1'-0"

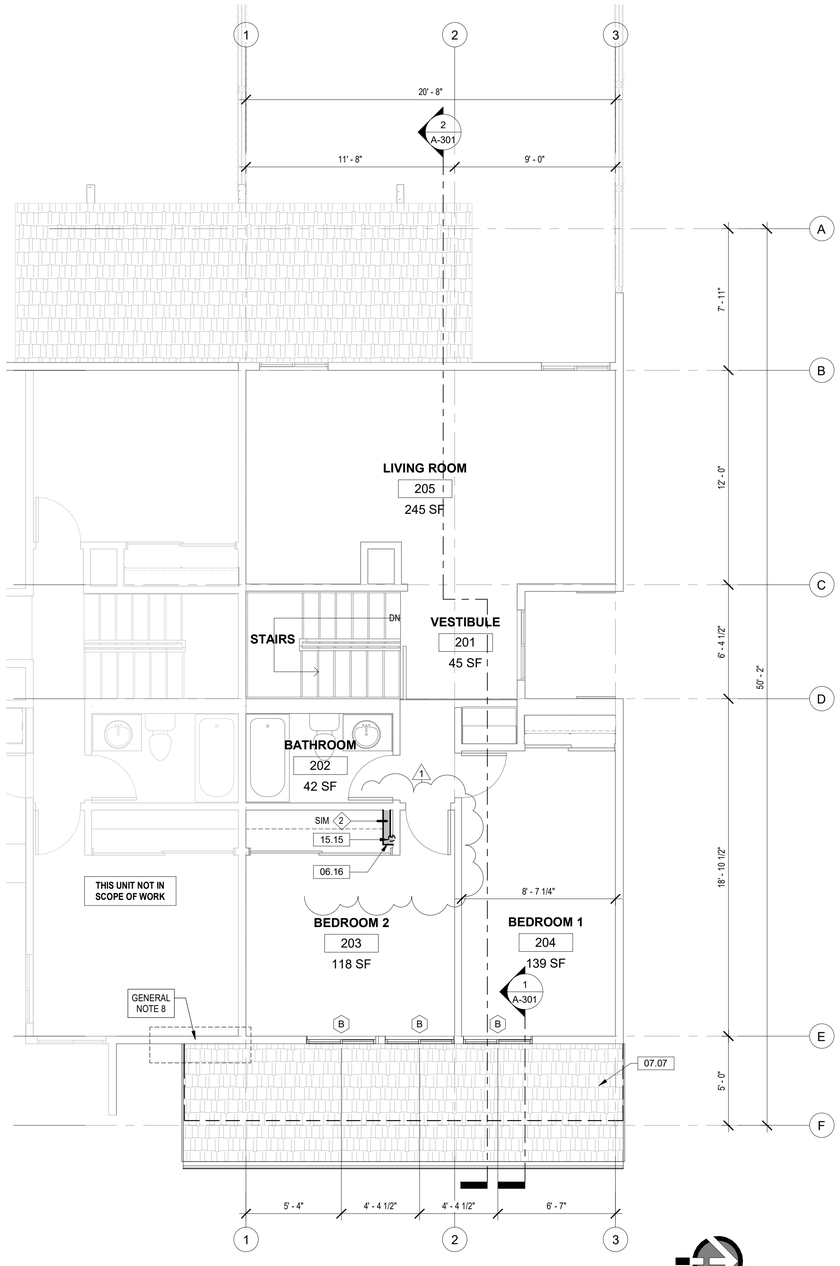

2 FLOOR PLAN - SECOND - PROPOSED
1/4" = 1'-0"

KEYNOTES - EXISTING TO REMAIN

E.36	EXISTING STAIRS AND RAILING

KEYNOTES

01.02	30"x48" CLEAR SPACE
03.08	NEW LANDING AT NEW APARTMENT ENTRANCE, LESS THAN 2% SLOPE IN ALL DIRECTIONS
03.09	SLOPED WALK NOT TO EXCEED 5% SLOPE
06.05	SOFFIT ABOVE (DUCT FOR DRYER AND FAN)
06.16	FURRED WALL (VENT FROM HEATER BELOW, DUCT TO ROOF)
07.07	NEW ROOF BELOW
15.09	WALL MOUNTED HEATER, REFER TO MECHANICAL PLANS
15.12	FORCED AIR FURNACE, SEE MECHANICAL PLANS
15.15	VENT TO ROOF (FROM HEATER BELOW)

GENERAL NOTES

1. CONTRACTOR TO VERIFY EXISTING WINDOW OPENINGS IN FIELD.
2. FOR NEW WATER HEATER ENCLOSURE, VERIFY MANUFACTURERS' MINIMUM CLEARANCE GUIDELINES.
3. WHERE WINDOWS AND DOORS ARE REMOVED AND NOT REPLACED INFILL TO MATCH SURROUNDING WALLS, WATERPROOF AND INSTALL EXTERIOR CEMENT PLASTER AND INTERIOR DRYWALL.
4. WHERE NEW WALLS ARE ADDED ADJACENT TO EXISTING WALL THEY SHALL BE FLUSH, SMOOTH, LEVEL AND SEAMLESS TO EXISTING ADJACENT SURFACES
5. REPAIR, WATERPROOF AND REPLACE WITH CEMENT PLASTER ANY AREAS DAMAGED BY WORK. MATCH FINISH, COLOR AND TEXTURE OF EXISTING ADJACENT SURFACES.
6. PAINT EXTERIOR NEW CEMENT PLASTER TO MATCH EXISTING. COLORS FOR EXTERIOR CEMENT PLASTER, DOORS, TRIMS, PATIO COVER, FASCIA, GUTTERS AND DOWNSPOUTS SELECTED BY CLIENT.
7. WHERE EXISTING UTILITIES ARE IN THE PATH OF CONSTRUCTION, RELOCATE PER CITY STANDARDS.
8. CONTRACTOR TO REVIEW EXISTING CONDITIONS AND REQUIREMENTS OF NEW CONSTRUCTION TO DETERMINE EXTENT OF REPAIRS REQUIRED AT THIS AREA. IF POSSIBLE, ALL WORK TO BE PERFORMED AT EXTERIOR.

LEGEND

- EXISTING WALL
- EXISTING PARTY WALL
- NEW WALL
- # FOR WALL TYPES SEE SHEET A-602
- A FOR WINDOW TYPES AND EGRESS SEE SHEET A-601

LAUTERBACH & ASSOCIATES
ARCHITECTS INC.
David C. Kesterson, Architect • Ilona Scott, Architect • Mark S. Pettit, Architect
300 MONTGOMERY AVENUE, OXNARD, CALIFORNIA 93036 | 805-988-0912 | FAX 805-981-4510 | www.la-arch.com

LICENSED ARCHITECT ILONA SCOTT No. C11881 Ren. 06/21 STATE OF CALIFORNIA

CONCORD DRIVE APARTMENTS

2950 & 2956 CONCORD DRIVE
OXNARD, CA, 93036

CITY OF OXNARD HOUSING AUTHORITY

435 S. D STREET
OXNARD, CALIFORNIA 93030

NO	DESCRIPTION	DATE
1	PLAN CHECK SUBMITTAL	07/31/2020

ISSUE

JOB NO.	20-190209
DRAWN BY:	TJL
CHECKED BY:	ISS
PROJECT MANAGER:	ISS
PRINT DATE:	8/10/2020 9:06:30 AM

FLOOR PLANS - 1ST & 2ND

A-101

THESE DRAWINGS AND SPECIFICATIONS ARE THE PROPERTY AND COPYRIGHT OF LAUTERBACH & ASSOCIATES. ALL RIGHTS RESERVED, AND SHALL NOT BE USED ON ANY OTHER WORK OR PROJECT EXCEPT BY WRITTEN AGREEMENT WITH LAUTERBACH & ASSOCIATES. WRITTEN DIMENSIONS SHALL TAKE PRECEDENCE OVER SCALED DIMENSIONS AND SHALL BE VERIFIED ON THE JOB SITE. ANY DISCREPANCY SHALL BE BROUGHT TO THE NOTICE OF LAUTERBACH & ASSOCIATES PRIOR TO COMMENCEMENT OF ANY WORK.

G:\2019 Projects\20-190708 City of Oxnard Set 4-Concord\Drawings\Architectural\2950 & 2956 Concord Drive - CD (Floor Plans).rvt

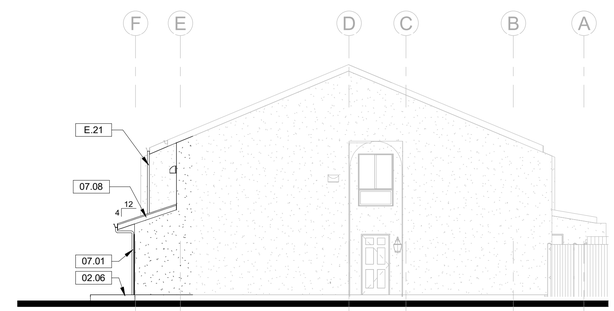

3 SOUTH ELEVATION - NEW (NORTH ELEVATION FLIPPED)
1/8" = 1'-0"

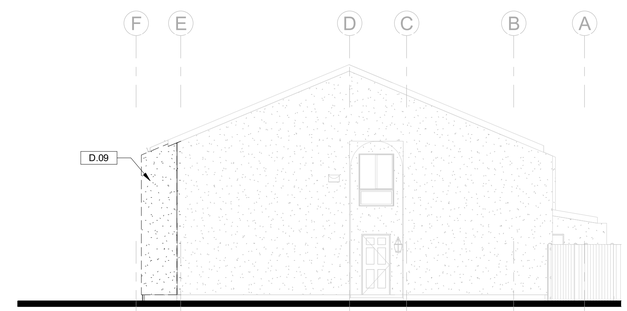

5 SOUTH ELEVATION - DEMOLITION (NORTH ELEVATION FLIPPED)
1/8" = 1'-0"

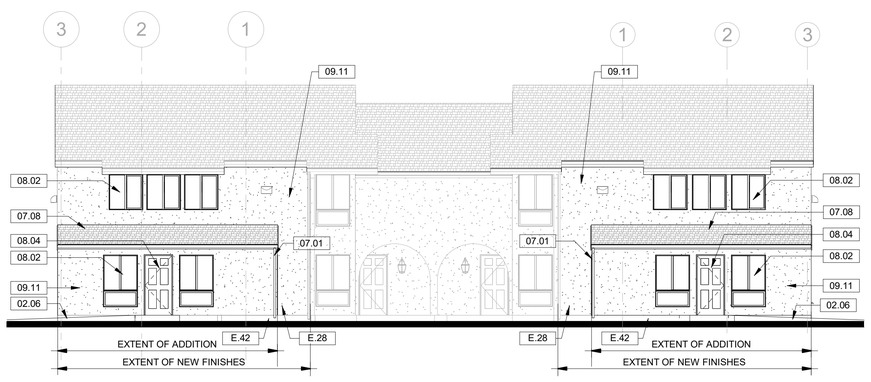

1 ELEVATION (WEST) - NEW
1/8" = 1'-0"

4 ELEVATION (WEST) DEMOLITION
1/8" = 1'-0"

KEYNOTES - EXISTING TO REMAIN

E.21	EXISTING ROOF GUTTER AND DOWNSPOUT
E.25	EXISTING BACKFLOW DEVICE
E.28	EXISTING HOSE BIBB
E.42	EXISTING WEEP SCREED
E.43	EXISTING PIPE

KEYNOTES - DEMOLITION

D.02	DEMOLISH EXISTING WINDOW
D.09	DEMOLISH EXISTING WING WALL
D.12	DEMOLISH EXISTING PORTION OF WALL
D.15	DEMOLISH EXISTING PLASTER WALL FINISHES

KEYNOTES

02.06	SLOPED WALK NOT TO EXCEED 5% SLOPE
07.01	RAIN GUTTER AND DOWNSPOUT, PAINTED TO MATCH WALL SURFACE
07.08	NEW ROOF
08.02	DUAL GLAZED WINDOW WITH VINYL FRAME
08.04	ENTRY DOORS, PAINTED
09.11	CEMENT PLASTER TO MATCH EXISTING

GENERAL DEMOLITION NOTES

1. IT IS THE RESPONSIBILITY OF THE CONTRACTOR TO VERIFY ALL CLEARANCES AND INSTALLATION REQUIREMENTS OF CONSTRUCTION ITEMS AGAINST EXISTING CONDITIONS AND DISPOSE OF REMOVED MATERIALS PER THE ORDINANCE.
2. THE CITY OF OXNARD HOUSING AUTHORITY SHALL HAVE THE FIRST RIGHT OF SALVAGE OF ITEMS SHOWN FOR DEMOLITION.
3. SEE MECH., ELEC., AND PLUMB. DWG'S FOR ADDITIONAL DEMOLITION NOTES AND CORRECT LAYOUT FOR SAWCUTS.
4. VERIFY ALL EXISTING DOORS TO BE REMOVED WITH PROPOSED REPLACEMENT DOOR ASSEMBLIES FOR SUFFICIENT CLEARANCE AND FRAMING REQUIREMENTS. DEMOLISH PORTIONS OF EXISTING WALL FRAMING AS REQ'D AND PROVIDE NEW FRAMING PER DETAILS WHERE REQUIRED. SEE DOOR SCHEDULE.
5. REMOVE EXISTING FLOOR FINISHES, MASTICS, ETC. DOWN TO EXISTING SLAB OR PLYWOOD FLOOR WHERE NEW FINISHES ARE INDICATED. PROVIDE PATCHING AND REFINISHING OF THE SURFACES PER MANUFACTURER'S SPECIFICATIONS FOR THE NEW FINISHES SELECTED TO INSURE PROPER INSTALLATION OF NEW FINISHES.
6. FOR EXISTING WALLS TO REMAIN, INSPECT FOR DAMAGE OF ANY KIND; REPLACE DAMAGED MATERIALS WITH NEW BEFORE NEW GYPSUM WALL BOARD IS APPLIED.
7. WHERE EXISTING PLUMBING AND OTHER UTILITIES ARE TO BE REMOVED, CAP ALL ABANDONED PIPING BELOW FINISH FLOOR AND WITHIN WALL, TYP. PRESERVE EXISTING ROUGH PLUMBING WHERE NECESSARY FOR RECONNECTION. SEE PLUMBING DRAWINGS.
8. EXISTING ITEMS TO REMAIN SHALL BE PROTECTED DURING DEMOLITION, OR TEMPORARILY REMOVED AND REPLACED AT CONTRACTOR'S OPTION.
9. PROTECT DURING DEMOLITION ANY STRUCTURAL ELEMENT TO REMAIN.
10. REMOVE EXISTING EXTERIOR PLASTER FINISHES AS REQUIRED. PROTECT EXISTING STRUCTURE FROM WEATHER OTHER DAMAGE DURING CONSTRUCTION, AND RESTORE MOISTURE PROTECTION SYSTEMS PRIOR TO INSTALLATION OF NEW PLASTER FINISHES.

GENERAL NOTES

1. CONTRACTOR TO VERIFY EXISTING WINDOW OPENINGS IN FIELD.
2. FOR NEW WATER HEATER ENCLOSURE, VERIFY MANUFACTURERS' MINIMUM CLEARANCE GUIDELINES.
3. WHERE WINDOWS AND DOORS ARE REMOVED AND NOT REPLACED INFILL TO MATCH SURROUNDING WALLS, WATERPROOF AND INSTALL EXTERIOR CEMENT PLASTER AND INTERIOR DRYWALL.
4. WHERE NEW WALLS ARE ADDED ADJACENT TO EXISTING WALL THEY SHALL BE FLUSH, SMOOTH, LEVEL, AND SEAMLESS.
5. REPAIR, WATERPROOF AND REPLACE WITH CEMENT PLASTER ANY AREAS DAMAGED BY WORK.
6. PAINT EXTERIOR NEW TO MATCH EXISTING. COLORS FOR EXTERIOR CEMENT PLASTER, DOORS, TRIMS, FASCIA, GUTTERS AND DOWNSPOUTS SELECTED BY CLIENT.
7. WHERE EXISTING UTILITIES ARE IN THE PATH OF CONSTRUCTION, RELOCATE PER CITY STANDARDS.
8. CONTRACTOR TO REVIEW EXISTING CONDITIONS AND REQUIREMENTS OF NEW CONSTRUCTION TO DETERMINE EXTENT OF REPAIRS REQUIRED AT THIS AREA. IF POSSIBLE, ALL WORK TO BE PERFORMED AT EXTERIOR.

THESE DRAWINGS AND SPECIFICATIONS ARE THE PROPERTY AND COPYRIGHT OF LAUTERBACH & ASSOCIATES. ALL RIGHTS RESERVED, AND SHALL NOT BE USED ON ANY OTHER WORK OR PROJECT EXCEPT BY WRITTEN AGREEMENT WITH LAUTERBACH & ASSOCIATES. WRITTEN DIMENSIONS SHALL TAKE PRECEDENCE OVER SCALED DIMENSIONS AND SHALL BE VERIFIED ON THE JOB SITE. ANY DISCREPANCY SHALL BE BROUGHT TO THE NOTICE OF LAUTERBACH & ASSOCIATES PRIOR TO COMMENCEMENT OF ANY WORK.

LAUTERBACH & ASSOCIATES
ARCHITECTS INC.
David C. Kesterson, Architect • Ilona Scott, Architect • Mark S. Pettit, Architect
300 MONTGOMERY AVENUE, OXNARD, CALIFORNIA 93036 | 805-988-0912 | FAX 805-981-4510 | www.la-arch.com

LICENSED ARCHITECT ILONA SCOTT No. C11881 Ren. 06/21 STATE OF CALIFORNIA

CONCORD DRIVE APARTMENTS

2950 & 2956 CONCORD DRIVE
OXNARD, CA, 93036

CITY OF OXNARD HOUSING AUTHORITY

435 S. D STREET
OXNARD, CALIFORNIA 93030

NO	DESCRIPTION	DATE

ISSUE

JOB NO.	20-190708
DRAWN BY:	TJL
CHECKED BY:	ISS
PROJECT MANAGER:	ISS
PRINT DATE:	8/10/2020 9:04:51 AM

ELEVATIONS

A-201

G:\2019 Projects\20-190708 City of Oxnard Set 4-Concord\Drawings\Architectural\2950 & 2956 Concord Drive - CD (Site and Elevs).rvt

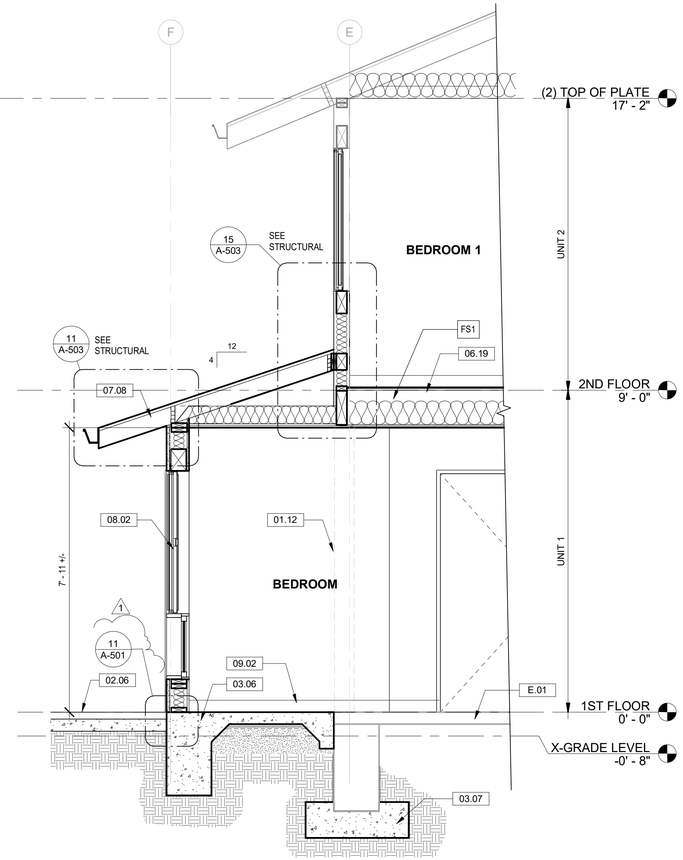

1 ENLARGED SECTION AT ADDITION
1/2" = 1'-0"

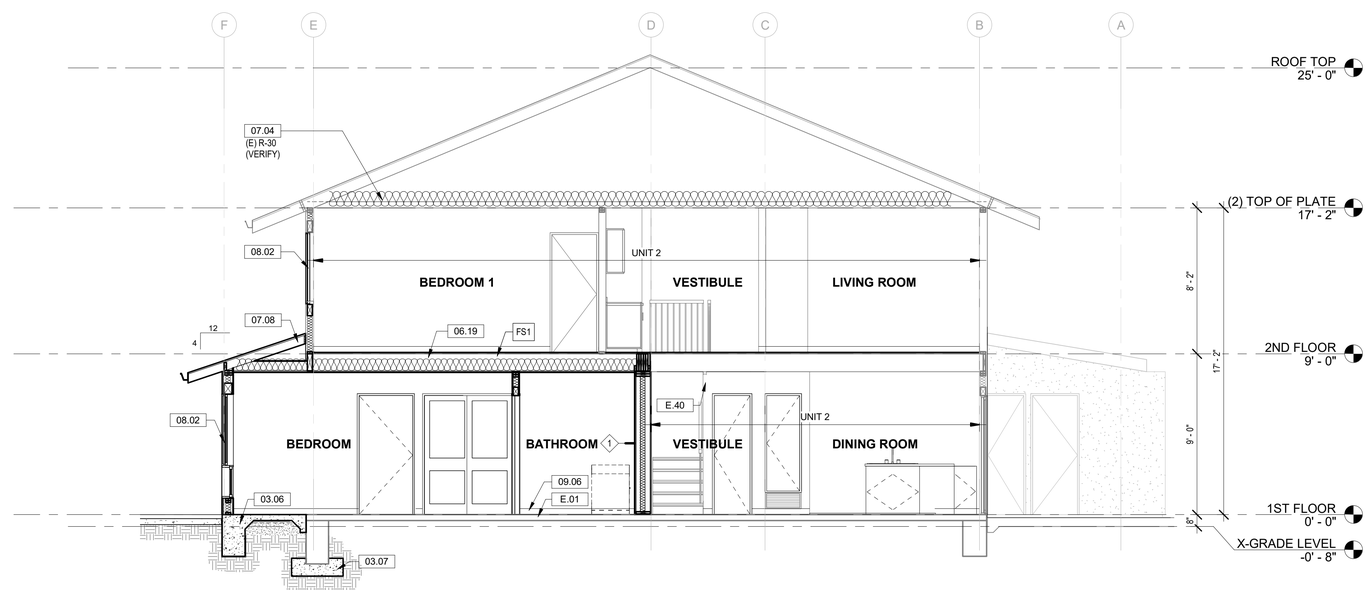

2 BUILDING SECTION
1/4" = 1'-0"

KEYNOTES - EXISTING TO REMAIN

E.01	EXISTING CONCRETE SLAB AND FOOTING
E.40	EXISTING SOFFIT

KEYNOTES

01.12	LINE OF DEMOLISHED EXTERIOR WALL
02.06	SLOPED WALK NOT TO EXCEED 5% SLOPE
03.06	NEW CONCRETE SLAB AND FOOTING
03.07	NEW CONCRETE PAD BELOW, BEYOND
06.19	EXISTING FLOOR CEILING SYSTEM MODIFIED FOR FIRE AND SOUND, SEE F.S.1/A-602
07.04	BATT INSULATION
07.08	NEW ROOF
08.02	WINDOW - SEE FLOOR PLAN
09.02	4" WALL BASE (PER SCHEDULE)
09.06	VINYL FLOORING

THESE DRAWINGS AND SPECIFICATIONS ARE THE PROPERTY AND COPYRIGHT OF LAUTERBACH & ASSOCIATES. ALL RIGHTS RESERVED AND SHALL NOT BE USED ON ANY OTHER WORK OR PROJECT EXCEPT BY WRITTEN AGREEMENT WITH LAUTERBACH & ASSOCIATES. WRITTEN DIMENSIONS SHALL TAKE PRECEDENCE OVER SCALED DIMENSIONS AND SHALL BE VERIFIED ON THE JOB SITE. ANY DISCREPANCY SHALL BE BROUGHT TO THE NOTICE OF LAUTERBACH & ASSOCIATES PRIOR TO COMMENCEMENT OF ANY WORK.

LAUTERBACH & ASSOCIATES
ARCHITECTS INC.
David C. Kesterson, Architect • Ilona Scott, Architect • Mark S. Pettit, Architect
300 MONTGOMERY AVENUE, OXNARD, CALIFORNIA 93036 | 805-988-0912 | FAX 805-981-4510 | www.la-arch.com

LICENSED ARCHITECT
ILONA SCOTT
No. C11881
Ren. 06/21
STATE OF CALIFORNIA

CONCORD DRIVE APARTMENTS

2950 & 2956 CONCORD DRIVE
OXNARD, CA, 93036

CITY OF OXNARD HOUSING AUTHORITY

435 S. D STREET
OXNARD, CALIFORNIA 93030

NO	DESCRIPTION	DATE
1	PLAN CHECK SUBMITTAL	07/31/2020

ISSUE

JOB NO. 20-190209

DRAWN BY: TJL
CHECKED BY: ISS
PROJECT MANAGER: ISS
PRINT DATE: 8/11/2020 11:26:36 AM

BUILDING SECTIONS

A-301

G:\2019 Projects\20-190708 City of Oxnard-Set-4-Concord\Drawings\Architectural\2950 & 2956 Concord Drive - CD (Floor Plans).rvt

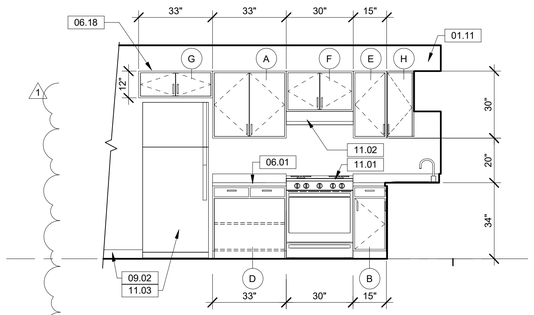

3 KITCHEN 101 (ACCESSIBLE)
3/8" = 1'-0"

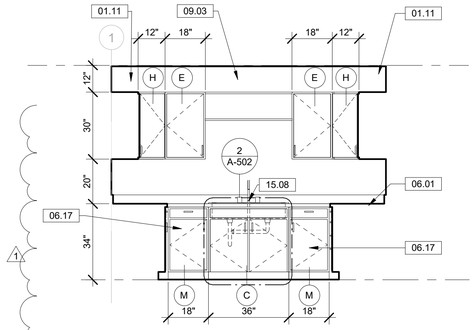

2 KITCHEN 101 (ACCESSIBLE)
3/8" = 1'-0"

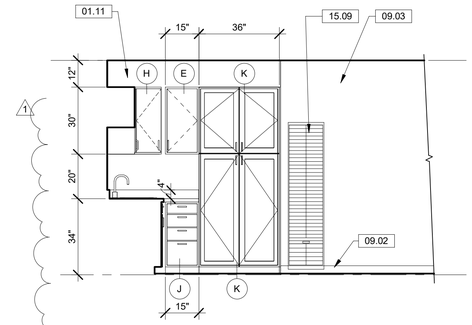

1 KITCHEN 101 (ACCESSIBLE)
3/8" = 1'-0"

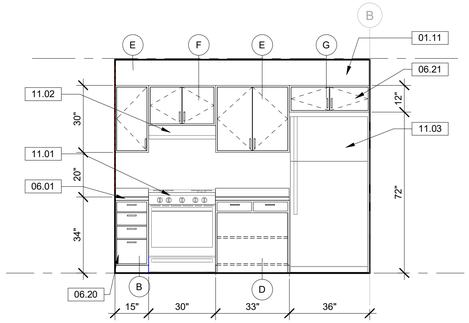

5 KITCHEN 108
3/8" = 1'-0"

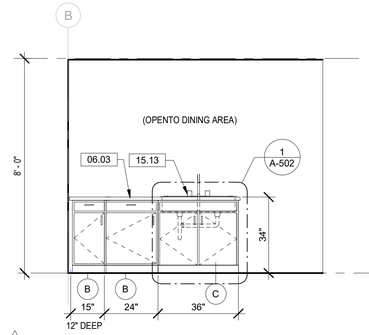

4 KITCHEN 108
3/8" = 1'-0"

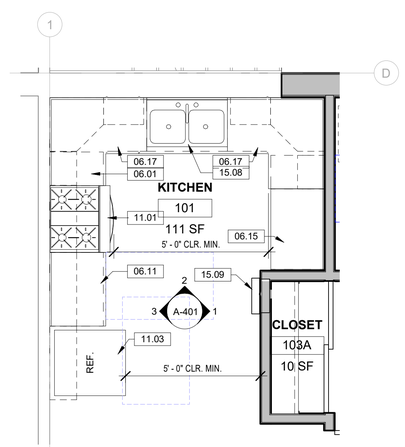

7 FLOOR PLAN - KITCHEN 101 (ACCESSIBLE)
3/8" = 1'-0"

0 2' 4' 6'

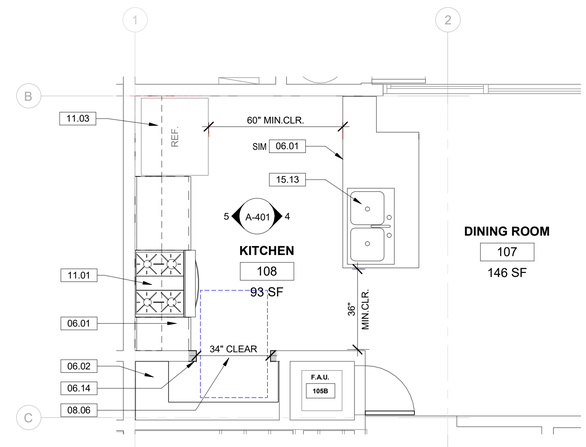

6 FLOOR PLAN - KITCHEN 108 (ADAPTABLE)
3/8" = 1'-0"

0 2' 4' 6'

KEYNOTES - EXISTING TO REMAIN

KEYNOTES

01.11	OPEN TO WALL ABOVE CABINETS
06.01	24" COUNTERTOP WITH 4" BACKSPLASH
06.02	SHELF AT PANTRY (4 SHELVES) 16"d. AT END, 8"D. AT BACK
06.03	ISLAND COUNTER TOP
06.11	UPPER CABINETS WITH ADJUSTABLE SHELVES
06.14	PATCH AND REPAIR JAMB AT EXISTING WALL
06.15	TALL CABINET
06.17	BASE CABINET WITH EXTENDED SHELVING TO CORNER
06.18	SAFETY TRIM AT UPPER CABINET, TYP.
06.20	BASE CABINET
06.21	UPPER CABINET
08.06	CASED OPENING, WOOD JAMB AND TRIM, MATCH EXISTING
09.02	4" WALL BASE (PER SCHEDULE)
09.03	GYPSUM BOARD, PAINTED
11.01	RANGE/ OVEN
11.02	RANGE HOOD
11.03	REFRIGERATOR
15.08	ACCESSIBLE KITCHEN SINK WITH PROTECTIVE INSULATED COVER FOR DRAIN PIPE, FAUCET TO BE ACCESSIBLE - REFER TO 2/A-502
15.09	WALL MOUNTED HEATER, REFER TO MECHANICAL PLANS
15.13	KITCHEN SINK

CASEWORK SCHEDULE

MARK	TYPE	DEPTH
A	UPPER - DOUBLE DOOR	1' - 0"
B	BASE - SINGLE DOOR WITH DRAWER	2' - 0"
C	BASE - SINK WITH REMOVABLE BASE AND DOORS	2' - 0"
D	BASE - WORKSPACE WITH REMOVABLE BASE AND SHELF	2' - 0"
E	UPPER - SINGLE DOOR	1' - 0"
F	UPPER - DOUBLE DOOR ABOVE STOVE/OVEN	1' - 0"
G	UPPER - DOUBLE DOOR ABOVE REFRIGERATOR	1' - 0"
H	UPPER - CORNER UNIT	1' - 0"
J	BASE - DRAWERS	2' - 0"
K	TALL CABINET - 4 DOOR	2' - 0"
M	BASE - SINGLE DOOR WITH DRAWER AND EXTENDED SHELVES	2' - 0"

GENERAL NOTES

1. PROVIDE SHOP DRAWINGS FOR CASEWORK.
2. THERE SHALL BE NO SHARP OR ABRASIVE SURFACES UNDER THE SINK.
3. FOR APPLIANCES SEE APPLIANCE SCHEDULE ON SHEET A-601
4. FOR ADDITIONAL REQUIRED CLEARANCES AND HEIGHT DIMENSIONS TO CONFORM WITH ACCESSIBILITY REQUIREMENTS SEE SHEET A-502.

LAUTERBACH & ASSOCIATES
ARCHITECTS INC.
David C. Kesterson, Architect • Ilona Scott, Architect • Mark S. Pettit, Architect
300 MONTGOMERY AVENUE, OXNARD, CALIFORNIA 93036 | 805-988-0912 | FAX 805-981-4510 | www.la-arch.com

LICENSED ARCHITECT ILONA SCOTT No. C11881 Ren. 06/21 STATE OF CALIFORNIA

CONCORD DRIVE APARTMENTS

2950 & 2956 CONCORD DRIVE
OXNARD, CA, 93036

CITY OF OXNARD HOUSING AUTHORITY

435 S. D STREET
OXNARD, CALIFORNIA 93030

NO	DESCRIPTION	DATE
1	PLAN CHECK SUBMITTAL	07/31/2020

ISSUE

JOB NO. 20-190209

DRAWN BY: TJL
CHECKED BY: ISS
PROJECT MANAGER: ISS
PRINT DATE: 8/10/2020 8:54:55 AM

LSV - KITCHENS

A-401

THESE DRAWINGS AND SPECIFICATIONS ARE THE PROPERTY AND COPYRIGHT OF LAUTERBACH & ASSOCIATES. ALL RIGHTS RESERVED, AND SHALL NOT BE USED ON ANY OTHER WORK OR PROJECT EXCEPT BY WRITTEN AGREEMENT WITH LAUTERBACH & ASSOCIATES. WRITTEN DIMENSIONS SHALL TAKE PRECEDENCE OVER SCALED DIMENSIONS AND SHALL BE VERIFIED ON THE JOB SITE. ANY DISCREPANCY SHALL BE BROUGHT TO THE NOTICE OF LAUTERBACH & ASSOCIATES PRIOR TO COMMENCEMENT OF ANY WORK.

G:\2019 Projects\20-190708 City of Oxnard\Set 4-Concord\Drawings\Architectural\2950 & 2956 Concord Drive - CD (Floor Plans).rvt

KEYNOTES

01.02	30"x48" CLEAR SPACE
01.13	"T" TURN-AROUND SPACE
01.14	36"x60" CLEAR TOILET SPACE, PER 11B 604.3.1 EXCEPTION
06.05	SOFFIT ABOVE (DUCT FOR DRYER AND FAN)
06.23	SOLID BLOCKING AT WALL FRAMING (GRAB BAR MOUNTING)
09.02	4" WALL BASE (PER SCHEDULE)
09.03	GYPSUM BOARD, PAINTED
10.01	42" GRAB BAR
10.02	36" GRAB BAR
10.03	MEDICINE CABINET
10.05	TOWEL RING
10.07	TOILET TISSUE HOLDER
10.09	CURTAIN ROD
10.10	TUB ENCLOSURE
15.03	WATER CLOSET
15.14	SHOWER CONTROL AREA

CASEWORK SCHEDULE

MARK	TYPE	DEPTH
A	UPPER - DOUBLE DOOR	1' - 0"
B	BASE - SINGLE DOOR WITH DRAWER	2' - 0"
C	BASE - SINK WITH REMOVABLE BASE AND DOORS	2' - 0"
D	BASE - WORKSPACE WITH REMOVABLE BASE AND SHELF	2' - 0"
E	UPPER - SINGLE DOOR	1' - 0"
F	UPPER - DOUBLE DOOR ABOVE STOVE/OVEN	1' - 0"
G	UPPER - DOUBLE DOOR ABOVE REFRIGERATOR	1' - 0"
H	UPPER - CORNER UNIT	1' - 0"
J	BASE - DRAWERS	2' - 0"
K	TALL CABINET - 4 DOOR	2' - 0"
M	BASE - SINGLE DOOR WITH DRAWER AND EXTENDED SHELVES	2' - 0"

GENERAL NOTES

1. PROVIDE SHOP DRAWINGS FOR CASEWORK.
2. THERE SHALL BE NO SHARP OR ABRASIVE SURFACES UNDER THE SINK.
3. FOR APPLIANCES SEE APPLIANCE SCHEDULE ON SHEET A-601
4. FOR ADDITIONAL REQUIRED CLEARANCES AND HEIGHT DIMENSIONS TO CONFORM WITH ACCESSIBILITY REQUIREMENTS SEE SHEET A-502.

LEGEND

(A) CASEWORK PER PLANS AND SCHEDULE ON SHEET A-602

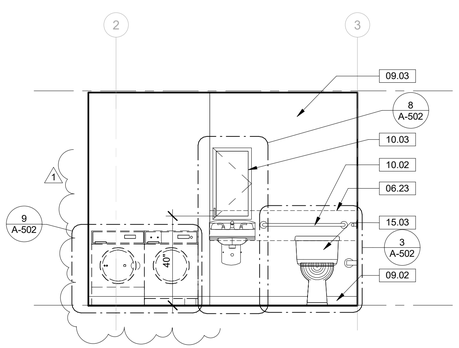

1 ELEVATION - ACCESSIBLE BATHROOM
3/8" = 1'-0"

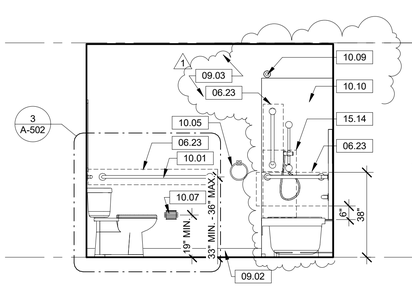

2 ELEVATION - ACCESSIBLE BATHROOM
3/8" = 1'-0"

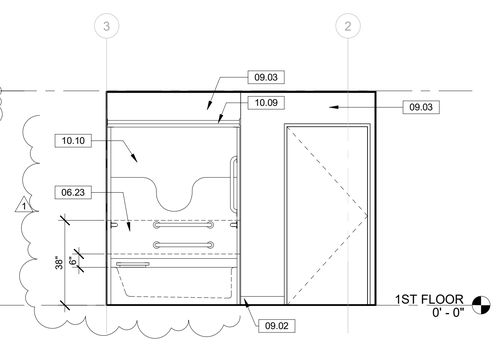

3 ELEVATION - ACCESSIBLE BATHROOM
3/8" = 1'-0"

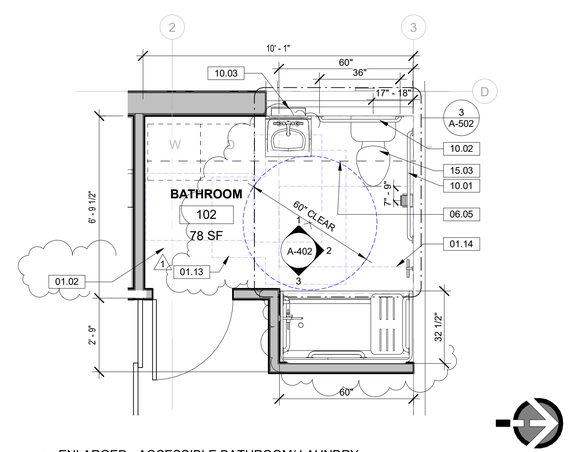

4 ENLARGED - ACCESSIBLE BATHROOM/ LAUNDRY
3/8" = 1'-0"

0 2" 4' 6'

LAUTERBACH & ASSOCIATES
ARCHITECTS INC.
David C. Kesterson, Architect • Ilona Scott, Architect • Mark S. Pettit, Architect
300 MONTGOMERY AVENUE, OXNARD, CALIFORNIA 93036 | 805-988-0912 | FAX 805-981-4510 | www.la-arch.com

LICENSED ARCHITECT ILONA SCOTT No. C11881 Ren. 06/21 STATE OF CALIFORNIA

CONCORD DRIVE APARTMENTS

2950 & 2956 CONCORD DRIVE
OXNARD, CA, 93036

CITY OF OXNARD HOUSING AUTHORITY

435 S. D STREET
OXNARD, CALIFORNIA 93030

NO	DESCRIPTION	DATE
1	PLAN CHECK SUBMITTAL	07/31/2020

ISSUE

JOB NO. 20-190209

DRAWN BY: TJL
CHECKED BY: ISS
PROJECT MANAGER: ISS
PRINT DATE: 8/14/2020 2:46:52 PM

LSV - BATHROOM

A-402

THESE DRAWINGS AND SPECIFICATIONS ARE THE PROPERTY AND COPYRIGHT OF LAUTERBACH & ASSOCIATES. ALL RIGHTS RESERVED AND SHALL NOT BE USED ON ANY OTHER WORK OR PROJECT EXCEPT BY WRITTEN AGREEMENT WITH LAUTERBACH & ASSOCIATES. WRITTEN DIMENSIONS SHALL TAKE PRECEDENCE OVER SCALED DIMENSIONS AND SHALL BE VERIFIED ON THE JOB SITE. ANY DISCREPANCY SHALL BE BROUGHT TO THE NOTICE OF LAUTERBACH & ASSOCIATES PRIOR TO COMMENCEMENT OF ANY WORK.

G:\2019 Projects\20-190708 City of Oxnard Set 4-Concord\Drawings\Architectural\2950 & 2956 Concord Drive - CD (Floor Plans).rvt

INTERNATIONAL SYMBOL OF ACCESSIBILITY

PAINTED FIELD:
BLUE TRAFFIC PAINT
3'-0" SQUARE WITH
3" RADIUS CORNERS

PAINTED SYMBOL:
WHITE TRAFFIC PAINT
MIN. 3" WIDE STRIPING

5 ACCESS - Symbol of Accessiblity
3/4" = 1'-0"

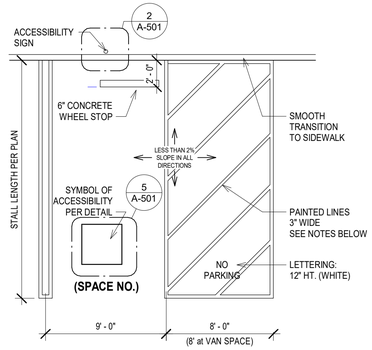

NOTE: ACCESS COMPLAINT STALLS TO BE STRIPED WITH BLUE PAINT

4 ACCESS - Parking Stall - Van
3/16" = 1'-0"

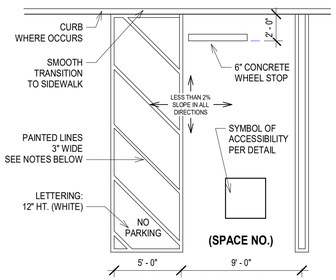

NOTE: ACCESS COMPLAINT STALLS TO BE STRIPED WITH BLUE PAINT

3 ACCESS - Parking Stall - Standard
3/16" = 1'-0"

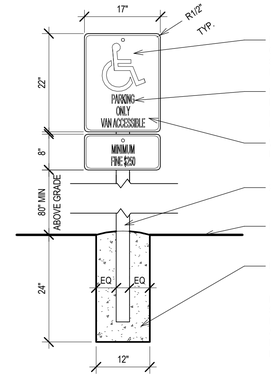

REFLECTORIZED SIGN CONSTRUCTED OF PORCELAIN STEEL WITH BEADED TEXT OR EQUAL

LETTERING ON SIGN MUST BE MIN. 1" IN HEIGHT. DESIGNATE FOR 'VAN ACCESSIBLE' WHERE REQ'D.

WHITE SYMBOL / LETTERS ON BLUE BACKGROUND

2"Ø STEEL TUBE

FINISH GRADE OR TOP OF AC PAVING

DEEP CONCRETE FOOTING

NOTE:
SIGN TO BE CENTERED AT THE INTERIOR END OF PARKING SPACE. AREA OF SIGN TO BE 70 SQ. IN. MIN. FOR SIGN MOUNTED ON WALL 36" MIN. ABOVE FINISH GRADE

SIGNAGE PER 2013 C.B.C 11B-502.8.1 and 2

2 ACCESS - parking stall sign
3/4" = 1'-0"

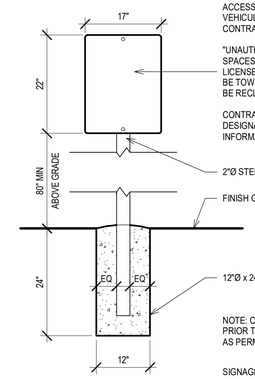

ACCESSIBLE WARNING SIGNAGE TO BE POSTED AT ALL VEHICULAR ENTRANCES, WITH MIN 1" LETTERING ON CONTRASTING BACKGROUND TO READ:

"UNAUTHORIZED VEHICLES PARKED IN DESIGNATED ACCESSIBLE SPACES NOT DISPLAYING DISTINGUISHING PLACARDS OR SPECIAL LICENSE PLATES ISSUED FOR PERSONS WITH DISABILITIES WILL BE TOWED AWAY AT OWNER'S EXPENSE. TOWED VEHICLES MAY BE RECLAIMED AT ..... OR BY TELEPHONING ....."

CONTRACTOR TO VERIFY WITH JUURISDICTION TO OBTAIN LOCAL DESIGNATED TOWING SERVICE INFOMATION, AND INCLUDE THIS INFORMATION ON SIGN

2"Ø STEEL TUBE

FINISH GRADE OR TOP OF AC PAVING

12"Ø x 24" DEEP CONCRETE FOOTING

NOTE: CONTRACTOR TO VERIFY INFORMATION PRIOR TO FABRICATION AND TO BE COMPLETED AS PERMANENT SIGN.

SIGNAGE PER 2013 C.B.C 11B-502.8.1 and 2

1 ACCESS - parking lot entrance
3/4" = 1'-0"

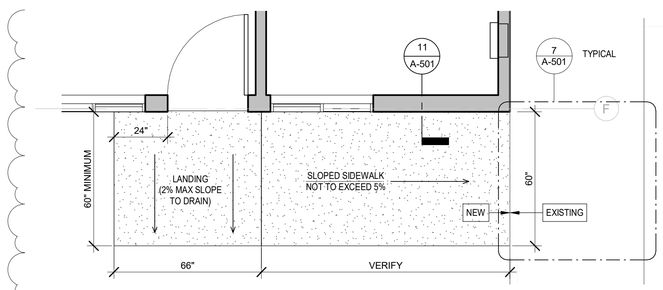

8 ENLARGED RAMP AT ACCESSIBLE APARTMENT ENTRANCE
3/8" = 1'-0"

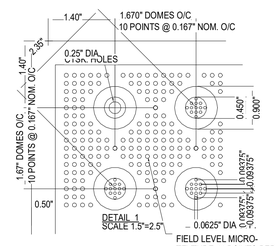

FIELD LEVEL MICRO-TEXTURE 41 POINTS PER SQUARE INCH

APPLY ARMOR-SEAL (PART NO. ADA-S125) PERIMETER SEALANT AT PERIMETER OF TILE AFTER INSTALLING FASTENERS. TOOL SMOOTH TO BLEND TILE EDGE WITH ADJACENT SURFACE

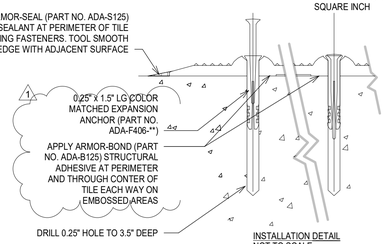

INSTALLATION DETAIL
NOT TO SCALE

9 ACCESS - truncated dome paver
1" = 1'-0"

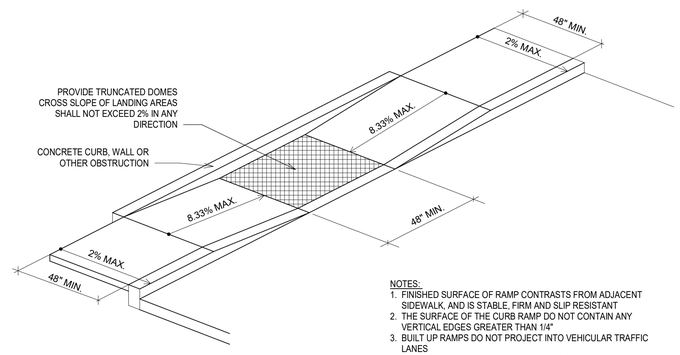

NOTES:
1. FINISHED SURFACE OF RAMP CONTRASTS FROM ADJACENT SIDEWALK, AND IS STABLE, FIRM AND SLIP RESISTANT
2. THE SURFACE OF THE CURB RAMP DO NOT CONTAIN ANY VERTICAL EDGES GREATER THAN 1/4"
3. BUILT UP RAMPS DO NOT PROJECT INTO VEHICULAR TRAFFIC LANES
4. TRANSITIONS FROM RAMP(S) TO WALKS, GUTTERS OR STREETS ARE FLUSH AND FREE OF ABRUPT CHANGES.

6 ACCESS - curb ramp
1/4" = 1'-0"

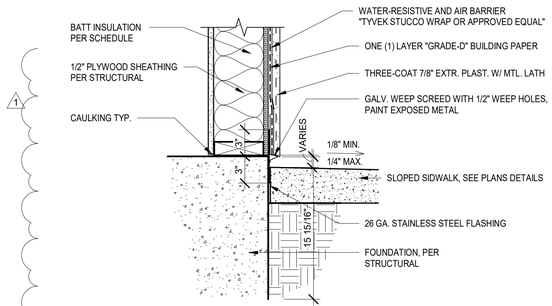

11 WALL BASE AT SLOPED SIDEWALK
1 1/2" = 1'-0"

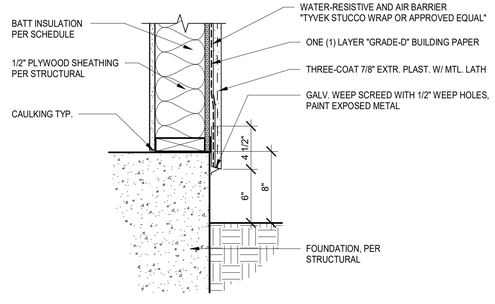

10 WALL BASE AT ADDITION
1 1/2" = 1'-0"

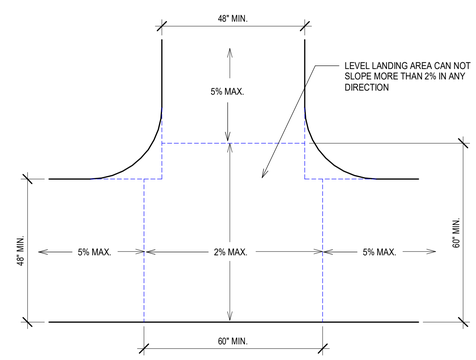

7 ACCESS - landing at walkway intersection
1/2" = 1'-0"

LAUTERBACH & ASSOCIATES
A R C H I T E C T S , I N C.
David C. Kesterson, Architect • Ilona Scott, Architect • Mark S. Pettit, Architect
300 MONTGOMERY AVENUE, OXNARD, CALIFORNIA 93036 | 805-988-0912 | FAX 805-981-4510 | www.la-arch.com

LICENSED ARCHITECT ILONA SCOTT No. C11881 Ren. 06/21 STATE OF CALIFORNIA

CONCORD DRIVE APARTMENTS

2950 & 2956 CONCORD DRIVE
OXNARD, CA, 93036

CITY OF OXNARD HOUSING AUTHORITY

435 S. D STREET
OXNARD, CALIFORNIA 93030

NO	DESCRIPTION	DATE
1	PLAN CHECK SUBMITTAL	07/31/2020

ISSUE

JOB NO. 20-190209

DRAWN BY: TJL
CHECKED BY: ISS
PROJECT MANAGER: ISS
PRINT DATE: 8/12/2020 8:22:10 AM

SITE DETAILS

A-501

THESE DRAWINGS AND SPECIFICATIONS ARE THE PROPERTY AND COPYRIGHT OF LAUTERBACH & ASSOCIATES. ALL RIGHTS RESERVED, AND SHALL NOT BE USED ON ANY OTHER WORK OR PROJECT EXCEPT BY WRITTEN AGREEMENT WITH LAUTERBACH & ASSOCIATES. WRITTEN DIMENSIONS SHALL TAKE PRECEDENCE OVER SCALED DIMENSIONS AND SHALL BE VERIFIED ON THE JOB SITE. ANY DISCREPANCY SHALL BE BROUGHT TO THE NOTICE OF LAUTERBACH & ASSOCIATES PRIOR TO COMMENCEMENT OF ANY WORK.

G:\2019 Projects\20-190708 City of Oxnard-Set 4-Concord\Drawings\Architectural\2950 & 2956 Concord Drive - CD (Floor Plans).rvt

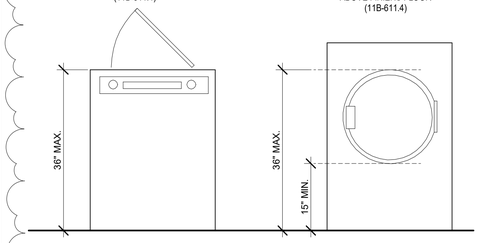

9 ACCESS - W&D Elevation
3/4" = 1'-0"

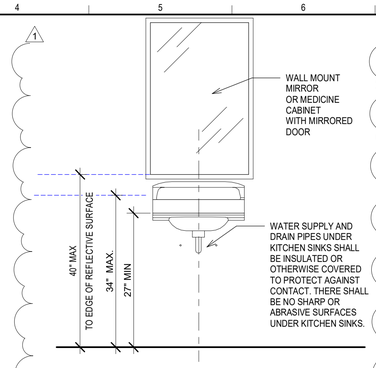

8 ACCESS - LAV WITH MIRROR
3/4" = 1'-0"

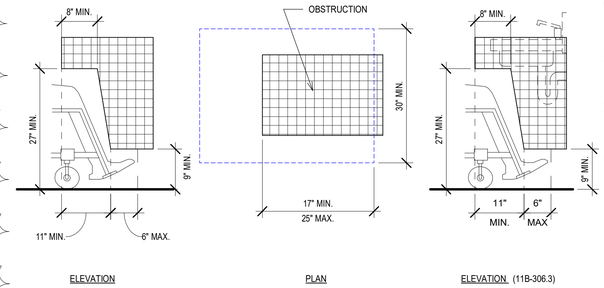

2 KNEE AND TOE CLEARANCE
3/4" = 1'-0"

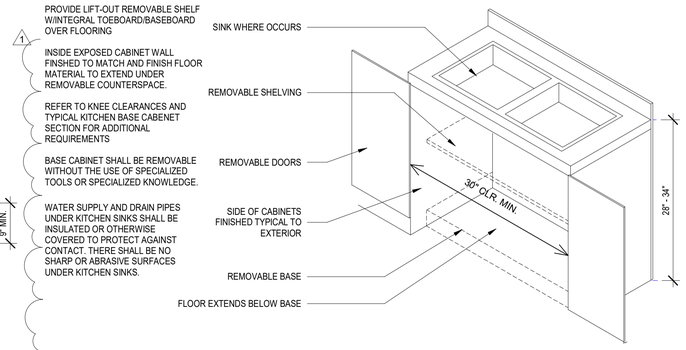

1 BASE CABINET AT SINK AND WORKSPACE
3/4" = 1'-0"

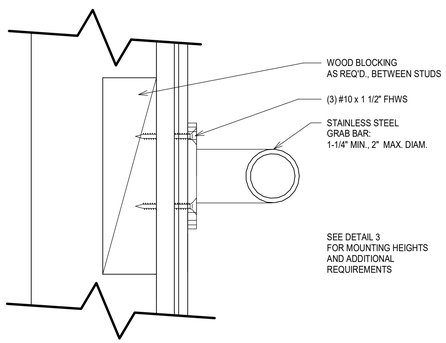

4 ACCESS - grab bar mounting
6" = 1'-0"

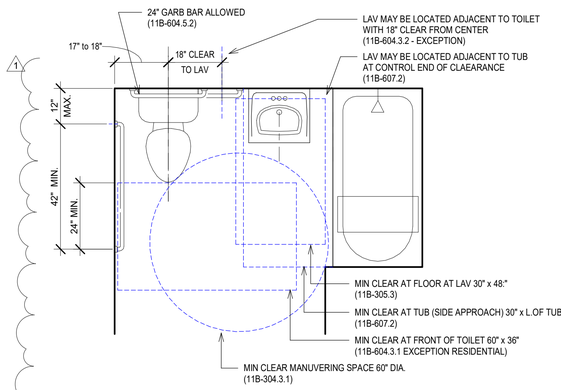

MINIMUM CLEARANCES AND ALLOWABLE ADJACENCIES - SEE FLOOR PLAN FOR SPECIFIC LAYOUT

3 ACCESS - RESIDENTIAL BATH REQUIREMENTS (11B) 2
1/2" = 1'-0"

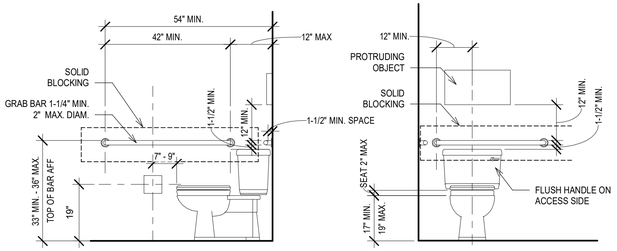

1. CONSTRUCTION MUST COMPLY WITH CALIFORNIA TITLE 24 REQUIREMENTS
2. THE REQUIRED CLEARANCE AROUND THE WATER CLOSET SHALL BE PERMITTED TO OVERLAP THE WATER CLOSET, ASSOCIATED GRAB BARS, DISPENSERS, SANITARY NAPKIN DISPOSAL UNITS, COAT HOOKS, SHELVES, ACCESSIBLE ROUTES, CLEAR FLOOR SPACE AND CLEARANCES REQUIRED AT OTHER FIXTURES, AND THE TURNING SPACE. NO OTHER FIXTURES OR OBSTRUCTIONS SHALL BE LOCATED WITHIN THE REQUIRED WATER CLOSET CLEARANCE.
3. SEATS SHALL NOT BE SPRUNG TO RETURN TO A LIFTED POSITION
4. THE REAR GRAB BAR SHALL BE PERMITTED TO BE 24 INCHES LONG MINIMUM, CENTERED ON THE WATER CLOSET, WHERE WALL SPACE DOES NOT PERMIT A LENGTH OF 36 INCHES MINIMUM DUE TO THE LOCATION OF A RECESSED FIXTURE ADJACENT TO THE WATER CLOSET.
5. FLUSH CONTROLS SHALL BE HAND OPERATED OR AUTOMATIC. CONTROLS SHALL BE LOCATED 44 INCHES MAXIMUM ABOVE THE FLOOR.
6. TOILET PAPER DISPENSERS SHALL NOT BE OF A TYPE THAT CONTROLS DELIVERY OR THAT DOES NOT ALLOW CONTINUOUS PAPER FLOW.
7. WATER SUPPLY AND DRAIN PIPES UNDER SINKS SHALL BE INSULATED OR OTHERWISE COVERED TO PROTECT AGAINST CONTACT. THERE SHALL BE NO SHARP OR ABRASIVE SURFACES UNDER KITHECN SINKS.

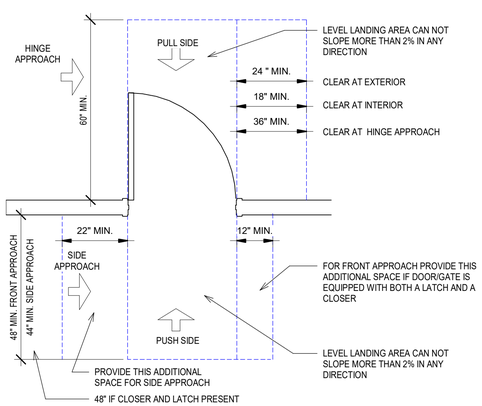

7 ACCESS - door clearances
1/2" = 1'-0"

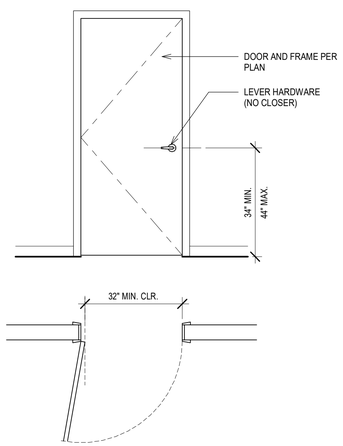

6 ACCESS - interior door clearances
1/2" = 1'-0"

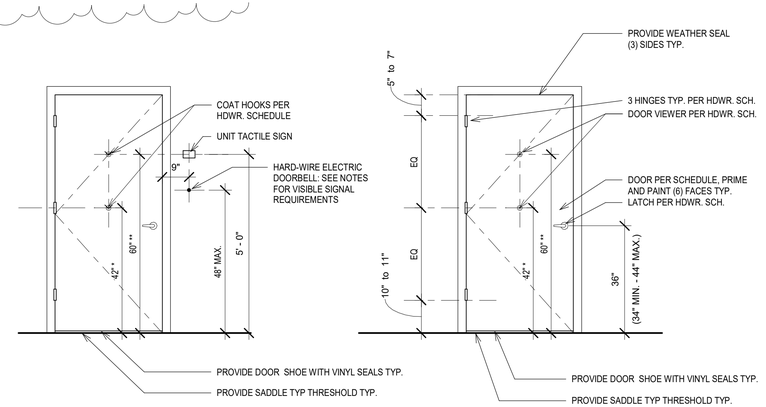

DOOR VIEWERS:
* HEIGHT FOR ACCESSIBLE UNITS
** PROVIDE BOTH HIGH AND LOW IN ACCESSIBLE UNITS
** TYPICAL HEIGHT FOR NON ACCESSIBLE UNITS

5 DOOR - typical door requirements
1/2" = 1'-0"

GENERAL NOTES:

1. HARDWARE. DOOR HANDLES, PULLS, LATCHE3S, LOCKS AND OTHER OPERATING DEVICES ON DOORS REQUIRED TO BE ACCESSIBLE SHALL NOT REQUIRE TIGHT GRASPING TIGHT PINCHING OR TWISTING OF THE WRIST TO OPERATE. (1008.1.9.1)
2. DOOR CLOSERS AND GATE CLOSERS SHALL BE ADJUSTED SO THAT FROM AN OPEN POSITION OF 90 DEGREES, THE TIME REQUIRED TO MOVE THE DOOR TO A POSITION OF 12 DEGREES FROM THE LATCH IS 5 SECONDS MINIMUM. (11B-404.2.8)
3. DOOR AND GATE SPRING HINGES SHALL BE ADJUSTED SO THAT FROM THE OPEN POSITION OF 70 DEGREES, THE DOOR OR GATE SHALL MOVE TO THE CLOSED POSITION IN 1.5 SECONDS MINIMUM.
4. THE FORCE FOR PUSHING OR PULLING A OPEN DOOR OR GATE OTHER THAN A FIRE DOOR SHALL BE AS FOLLOWS:
   a. INTERIOR HINGED DOORS AND GATES: 5 POUNDS MAXIMUM.
   b. SLIDING OR FOLDING DOORS: 5 POUNDS MAXIMUM.
   c. REQUIRED FIRE DOORS: THE MINIMUM OPENING FORCE ALLOWABLE BY THE APPROPRIATE ADMINISTRATIVE AUTHORITY, NOT TO EXCEED 15 POUNDS
   d. EXTERIOR HINGED DOORS: 5 POUNDS MAXIMUM
5. SWING DOOR AND GATE SURFACES WITHIN 10 INCHES OF THE FINISH FLOOR OR GROUND MEASURED VERTICALLY SHALL HAVE A SMOOTH SURFACE ON THE PUSH SIDE EXTENDING THE FULL WIDTH OF THE DOOR OR GATE. PARTS CREATING HORIZONTAL OR VERTICAL JOINTS IN THESE SURFACES SHALL BE WITHIN 1/16 INCH OF THE SAME PLANE AS THE OTHER AND BE FREE OF SHARP OR ABRASIVE EDGES. CAVITIES CREATED BY ADDED KICK PLATES SHALL BE CAPPED.
6. DOORS, GATES, AND SIDE LIGHTS ADJACENT TO DOORS OR GAT4ES, CONTAINING ONE OR MORE GLAZING PANELS THAT PERMIT VIEWING THROUGH THE PANELS SHALL HAVE THE BOTTOM OF AT LEAST ONE GLAZED PANEL LOCATED 43 INCHES MAXIMUM ABOVE THE FINISH FLOOR.
   a. EXCEPTION: GLAZING PANELS WITH THE LOWEST PART MORE THAN 66 INCHES FROM THE FINISH FLOOR OR GROUND SHALL NOT BE REQUIRED TO COMPLY.
7. DOORWAYS SHALL PROVIDE A CLEAR OPENING OF 32 INCHE3S MINIMUM IN POWER-ON AND POWER-OFF MODE. THE MINIMUM CLEAR WIDTH FOR AUTOMATIC DOOR SYSTEMS IN A DOORWAY SHALL PROVIDE A CLEAR, UNOBSTRUCTED OPENING OF 32 INCHES WITH ONE LEAF POSITIONED AT AN ANGLE OF 90 DEGREES FROM ITS CLOSED POSITION.

LAUTERBACH & ASSOCIATES
A R C H I T E C T S I N C.
David C. Kesterson, Architect • Ilona Scott, Architect • Mark S. Pettit, Architect
300 MONTGOMERY AVENUE, OXNARD, CALIFORNIA 93036 | 805-988-0912 | FAX 805-981-4510 | www.la-arch.com

LICENSED ARCHITECT ILONA SCOTT No. C11881 Ren. 06/21 STATE OF CALIFORNIA

CONCORD DRIVE APARTMENTS
2950 & 2956 CONCORD DRIVE
OXNARD, CA, 93036

CITY OF OXNARD HOUSING AUTHORITY
435 S. D STREET
OXNARD, CALIFORNIA 93030

NO	DESCRIPTION	DATE
1	PLAN CHECK SUBMITTAL	07/31/2020

ISSUE

JOB NO. 20-190209

DRAWN BY: TJL
CHECKED BY: ISS
PROJECT MANAGER: ISS
PRINT DATE: 8/14/2020 8:27:31 AM

ACCESSIBLE DETAILS

A-502

THESE DRAWINGS AND SPECIFICATIONS ARE THE PROPERTY AND COPYRIGHT OF LAUTERBACH & ASSOCIATES. ALL RIGHTS RESERVED, AND SHALL NOT BE USED ON ANY OTHER WORK OR PROJECT EXCEPT BY WRITTEN AGREEMENT WITH LAUTERBACH & ASSOCIATES. WRITTEN DIMENSIONS SHALL TAKE PRECEDENCE OVER SCALED DIMENSIONS AND SHALL BE VERIFIED ON THE JOB SITE. ANY DISCREPANCY SHALL BE BROUGHT TO THE NOTICE OF LAUTERBACH & ASSOCIATES PRIOR TO COMMENCEMENT OF ANY WORK.

G:\2019 Projects\20-190108 City of Oxnard-Set 4-Concord\Drawings\Architectural\2950 & 2956 Concord Drive - CD (Floor Plans).rvt

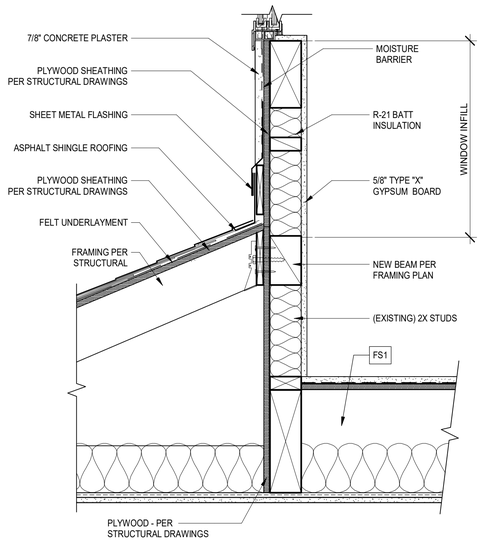

15 ROOF AT FIRST FLOOR ADDITION
1 1/2" = 1'-0"

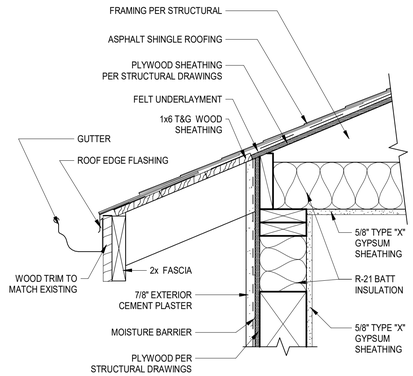

11 ROOF EAVE AT EXTERIOR NEW WALL
1 1/2" = 1'-0"

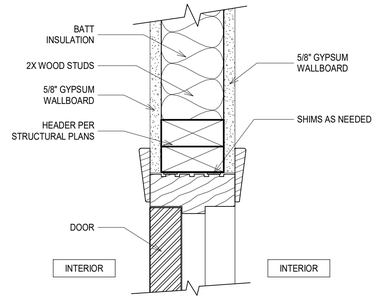

7 DOOR HEAD - INTERIOR
3" = 1'-0"

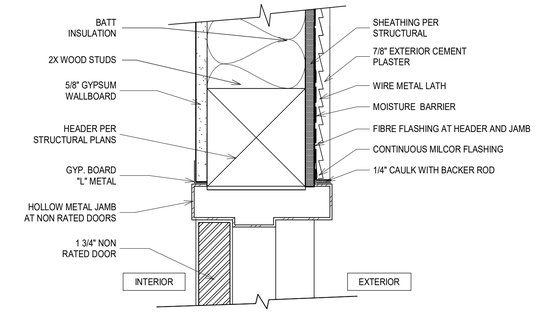

3 DOOR HEAD - EXTERIOR AT WATER HEATER ENCLOSURE
3" = 1'-0"

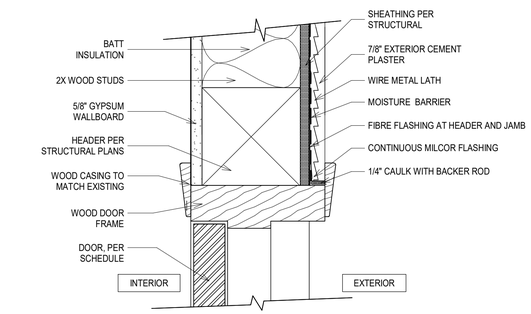

4 DOOR HEAD - EXTERIOR ENTRANCE
3" = 1'-0"

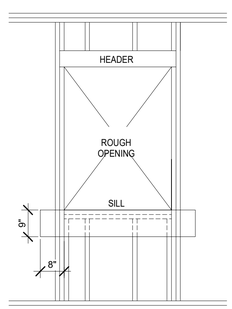

A

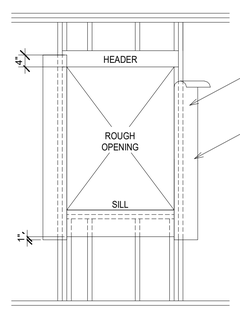

B

9" WIDE JAMB STRIPS WITH INSIDE EDGE OF FELT EVEN W/ EDGE OF OPENING

ASPHALT SATURATED ROOFING FELT

1. ATTACH FELT WITH GALV. ROOFING NAILS OR RUST- RESISTANT STAPLES - TYP.
2. AT WINDOW HEAD, JAMB AND SILLS, THE WINDOW FLANGE

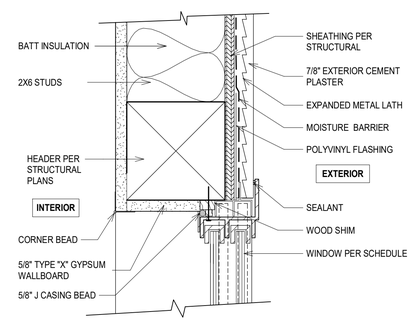

6 WINDOW HEAD - EXTERIOR CEMENT PLASTER
3" = 1'-0"

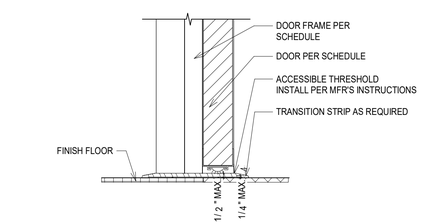

2 DOOR - INTERIOR ACCESSIBLE THRESHOLD
3" = 1'-0"

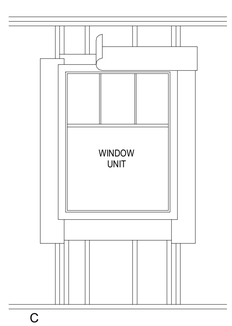

C

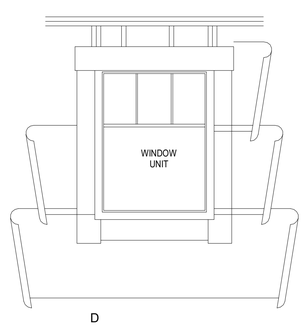

D

APPLY CAULK BEAD TO THE BACK SURFACE OF WINDOW. INSTALL OVER FELT STRIPS- INSTALL 9" WIDE FELT HEAD FLASHING OVER TOP FLANGE.

STARTING AT BOTTOM OF WALL LAY WATER RESISTANT PAPER UNDER THE SILL STRIP- INSTALL SUCCEEDING COURSES OF WATER-RESISTANT PAPER OVER SILL, JAMB, AND HEAD FLANGE IN SHINGLE FASHION W/ MIN. 2" OVERLAPS.

13 WINDOWS - TYPICAL FLASHINGS
1/2" = 1'-0"

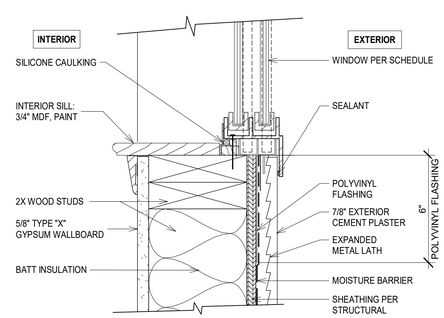

5 WINDOW SILL - EXTERIOR CEMENT PLASTER
3" = 1'-0"

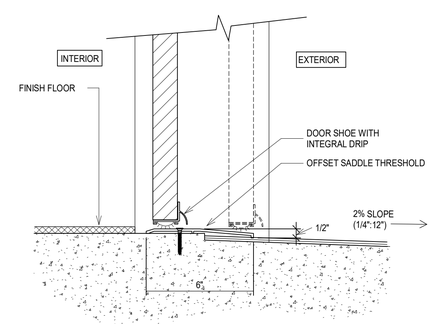

1 DOOR THRESHOLD - ACCESSIBLE (AT SLAB ON GRADE)
3" = 1'-0"

LAUTERBACH & ASSOCIATES
ARCHITECTS INC.
David C. Kesterson, Architect • Ilona Scott, Architect • Mark S. Pettit, Architect
300 MONTGOMERY AVENUE, OXNARD, CALIFORNIA 93036 | 805-988-0912 | FAX 805-981-4510 | www.la-arch.com

LICENSED ARCHITECT ILONA SCOTT No. C11881 Ren. 06/21 STATE OF CALIFORNIA

CONCORD DRIVE APARTMENTS

2950 & 2956 CONCORD DRIVE
OXNARD, CA, 93036

CITY OF OXNARD HOUSING AUTHORITY

435 S. D STREET
OXNARD, CALIFORNIA 93030

NO	DESCRIPTION	DATE

ISSUE

JOB NO. 20-190209

DRAWN BY: TJL
CHECKED BY: ISS
PROJECT MANAGER: ISS
PRINT DATE: 8/10/2020 8:55:32 AM

ROOF, DOOR & WINDOW DETAILS

A-503

THESE DRAWINGS AND SPECIFICATIONS ARE THE PROPERTY AND COPYRIGHT OF LAUTERBACH & ASSOCIATES. ALL RIGHTS RESERVED, AND SHALL NOT BE USED ON ANY OTHER WORK OR PROJECT EXCEPT BY WRITTEN AGREEMENT WITH LAUTERBACH & ASSOCIATES. WRITTEN DIMENSIONS SHALL TAKE PRECEDENCE OVER SCALED DIMENSIONS AND SHALL BE VERIFIED ON THE JOB SITE. ANY DISCREPANCY SHALL BE BROUGHT TO THE NOTICE OF LAUTERBACH & ASSOCIATES PRIOR TO COMMENCEMENT OF ANY WORK.

G:\2019 Projects\20-190708 City of Oxnard\Set 4-Concord\Drawings\Architectural\2950 & 2956 Concord Drive - CD (Floor Plans).rvt

DOOR SCHEDULE - RESIDENTIAL

ROOM	DOOR	WIDTH	HEIGHT	THICKNESS	TYPE	MATERIAL	FINISH	FRAME TYPE	COMMENTS
ENTRY - LIVING ROOM	100	3' - 0"	6' - 8"	0' - 1 3/4"	A	Wood	Paint	Wood	TO MATCH EXISTING UNIT DOORS
BATHROOM	102	3' - 0"	6' - 8"	0' - 1 3/4"	B	Wood	Paint	Wood	
BEDROOM	103	3' - 0"	6' - 8"	0' - 1 3/4"	B	Wood	Paint	Wood	
BEDROOM CLOSET	103A	4' - 11"	6' - 8"		C	Wood	Paint	Wood	
CLOSET	106	2' - 0"	6' - 8"	0' - 1 3/4"	B	Wood	Paint	Wood	
FURNACE	107A	1' - 10"	5' - 4"	0' - 1 3/4"	E	Wood	Paint	Wood	REPLACE DAMAGED DOOR AND HARDWARE
ENCLOSURE	112	3' - 0"	6' - 8"	0' - 1 3/4"	D	Metal	Paint	Metal	

WINDOW SCHEDULE

MARK	WIDTH	HEIGHT	Style	U-VALUE	SOLAR HEAT GAIN COEFFICIENT	Comments
A	3' - 10"	5' - 10"	Horizontal Sliding Window	0.3	0.23	NEW WINDOWS TO MATCH STYLE OF EXISTING (RETROFIT VINYL)
B	3' - 10"	4' - 0"	Horizontal Sliding Window	0.3	0.23	NEW IN EXISTING OPENINGS (RETROFIT VINYL)

ROOM FINISH SCHEDULE

NUMBER	NAME	AREA	FLOOR FINISH	BASE FINISH	WALL FINISH	CEILING FINISH	COMMENTS
100	LIVING ROOM	112 SF	SV.1		GB-Paint	GB-Paint	
101	KITCHEN	111 SF	SV.1		GB-Paint	GB-Paint	
102	BATHROOM	78 SF	SV.1		GB-Paint	GB-Paint	
103	BEDROOM	121 SF	SV.1		GB-Paint	GB-Paint	
103A	CLOSET	10 SF	SV.1		GB-Paint	GB-Paint	
104	ENTRY	30 SF	SV.1		GB-Paint	GB-Paint	
105	VESTIBULE	41 SF	SV.1		GB-Paint	GB-Paint	
105B	F.A.U.	5 SF			GB-Paint	GB-Paint	
106	CLOSET	5 SF	SV.1		GB-Paint	GB-Paint	
107	DINING ROOM	146 SF	SV.1		GB-Paint	GB-Paint	
108	KITCHEN	93 SF	SV.1		GB-Paint	GB-Paint	
110	LAUNDRY	55 SF	SV.1		GB-Paint	GB-Paint	
111	STAIR	43 SF			GB-Paint	GB-Paint	
112	HEATER ENCLOSURE	10 SF					
201	VESTIBULE	45 SF			GB-Paint	(E)	
202	BATHROOM	42 SF			(E)	(E)	(E) CLEAN AND PAINT ONLY
203	BEDROOM 2	118 SF			GB-Paint	(E)	
204	BEDROOM 1	139 SF			GB-Paint	(E)	
205	LIVING ROOM	245 SF	SV.1		GB-Paint	GB-Paint	

DOOR TYPES

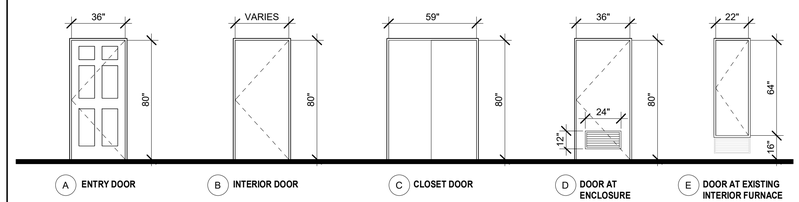

DOOR NOTES

***11B*-404.2.10 Door and gate surfaces.** Swinging door and gate surfaces within 10 inches (*254* mm) of the finish floor or ground measured vertically shall have a smooth surface on the push side extending the full width of the door or gate. Parts creating horizontal or vertical joints in these surfaces shall be within 1/16 inch (1.6 mm) of the same plane as the other *and be free of sharp or abrasive edges*. Cavities created
- by added kick plates shall be capped.
-

***11B*-404.2.9 Door and gate opening force.** The force for pushing or pulling open a door or gate shall be as follows:
1. Interior hinged doors and gates: 5 pounds (22.2 N) maximum.
2. Sliding or folding doors: 5 pounds (22.2 N) maximum.
3. Required fire doors: the minimum opening force allowable by the appropriate administrative authority, not to exceed 15 pounds (66.7 N).
- *4. Exterior hinged doors: 5 pounds (22.2 N) maximum.*

***11B*-404.2.7 Door and gate hardware.** Handles, pulls, latches, locks, and other operable parts on doors and gates shall comply with *Section 11B*-309.4. Operable parts of such hardware shall be 34 inches (*864* mm) minimum and *44 inches (1118 mm)* maximum above the finish floor or ground. Where sliding doors are in the fully open position, operating hardware shall be exposed and usable from both sides.

***11B*-309.4 Operation.** Operable parts shall be operable with one hand and shall not require tight grasping, pinching, or twisting of the wrist. The force required to activate operable parts shall be 5 pounds (22.2 N) maximum.

LEVER STYLE HARDWARE TO BE PROVIDED FOR ALL DOORS

WINDOW NOTES

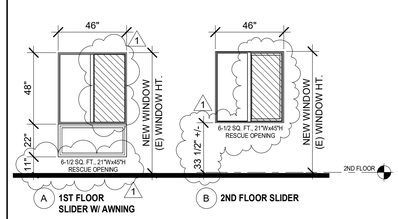

PER CBC 1030.2 : MINIMUM SIZE. EMERGENCY ESCAPE AND RESCUE OPENINGS SHALL HAVE A MINIMUM NET CLEAR OPENING OF 5.7 SQUARE FEET (0.53 M2).
EXCEPTION: THE MINIMUM NET CLEAR OPENING FOR GRADEFLOOR EMERGENCY ESCAPE AND RESCUE OPENINGS SHALL BE 5 SQUARE FEET (0.46 M2).

PER CBC 1030.2.1: MINIMUM DIMENSIONS. THE MINIMUM NET CLEAR OPENING HEIGHT DIMENSION SHALL BE 24 INCHES (610 MM). THE MINIMUM NET CLEAR OPENING WIDTH DIMENSION SHALL BE 20 INCHES (508 MM). THE NET CLEAR OPENING DIMENSIONS SHALL BE THE RESULT OF NORMAL OPERATION OF THE OPENING.

PER CBC 1030.3: MAXIMUM HEIGHT FROM FLOOR. EMERGENCY ESCAPE AND RESCUE OPENINGS SHALL HAVE THE BOTTOM OF THE CLEAR OPENING NOT GREATER THAN 44 INCHES (1118 MM) MEASURED FROM THE FLOOR.

RESCUE OPENING AREA

APPLIANCE AND FIXTURE SCHEDULE

ALL APPLIANCES ARE ACCESS COMPLIANT ("ADA")
ALL APPLIANCES ARE ENERGY STAR RATED

KITCHEN
- REFRIGERATOR : FRIGIDAIRE, FFHT1821 S/W/B (18 CU.FT.)
- STOVE /OVEN : WHIRLPOOL, WEWEG515SOFS
- SINK: AMERICAN STANDARD 24DB.332284.290 (DOUBLE BOWL STAINLESS STL.)
- FAUCET: DELTA 100LF-WF

BATH
- FIBERGLASS TUB-SHOWER : FREEDOM BATHTUBS, APTG3260TSADA
- TUB/SHOWER FIXTURE: SYMMONS ORIGINS 9604-PLR
- TOILET - AMERICAN STANDARD ACCESS PRO, 215AG.107RS
- WALL MOUNT LAV: AMERICAN STANDARD, MURRO
- WALL MOUNT LAV: AMERICAN STANDARD LUCERN 0356.028.020
- DROP-IN LAV: AMERICAN STANDARD, AQUALYN, 0476.028
- FAUCET: SYMMONS, SYMMETRIX, S-20 SERIES

LAUTERBACH & ASSOCIATES
ARCHITECTS INC.
David C. Kesterson, Architect • Ilona Scott, Architect • Mark S. Pettit, Architect
300 MONTGOMERY AVENUE, OXNARD, CALIFORNIA 93036 | 805-988-0912 | FAX 805-981-4510 | www.la-arch.com

LICENSED ARCHITECT ILONA SCOTT No. C11881 Ren. 06/21 STATE OF CALIFORNIA

CONCORD DRIVE APARTMENTS

2950 & 2956 CONCORD DRIVE
OXNARD, CA, 93036

CITY OF OXNARD HOUSING AUTHORITY

435 S. D STREET
OXNARD, CALIFORNIA 93030

NO	DESCRIPTION	DATE
1	PLAN CHECK SUBMITTAL	07/31/2020

ISSUE

JOB NO. 20-190209

DRAWN BY: TJL
CHECKED BY: ISS
PROJECT MANAGER: ISS
PRINT DATE: 8/12/2020 8:22:33 AM

SCHEDULES

A-601

THESE DRAWINGS AND SPECIFICATIONS ARE THE PROPERTY AND COPYRIGHT OF LAUTERBACH & ASSOCIATES. ALL RIGHTS RESERVED. AND SHALL NOT BE USED ON ANY OTHER WORK OR PROJECT EXCEPT BY WRITTEN AGREEMENT WITH LAUTERBACH & ASSOCIATES. WRITTEN DIMENSIONS SHALL TAKE PRECEDENCE OVER SCALED DIMENSIONS AND SHALL BE VERIFIED ON THE JOB SITE. ANY DISCREPANCY SHALL BE BROUGHT TO THE NOTICE OF LAUTERBACH & ASSOCIATES PRIOR TO COMMENCEMENT OF ANY WORK.

G:\2019 Projects\20-190708 City of Oxnard Set 4-Concord\Drawings\Architectural\2950 & 2956 Concord Drive - CD [Floor Plans]\rvt

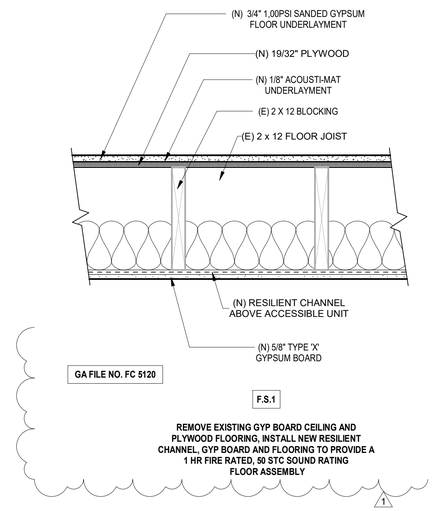

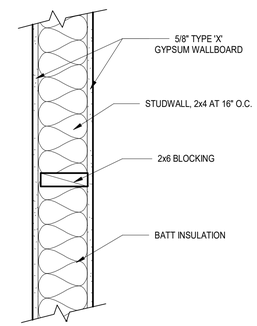

NEW INTERIOR 2x6 WALL AT WATER HEATER

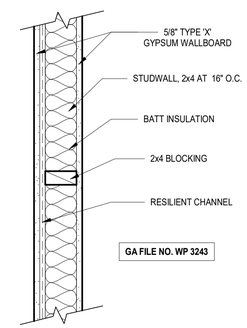

NEW INTERIOR 2x4 1 HOUR STC 50 SOUND RATED WALL

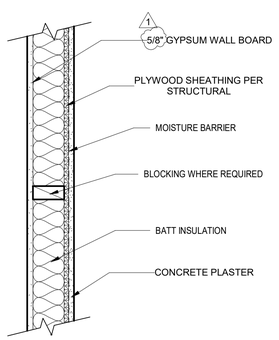

NEW EXTERIOR 2x4 WALL

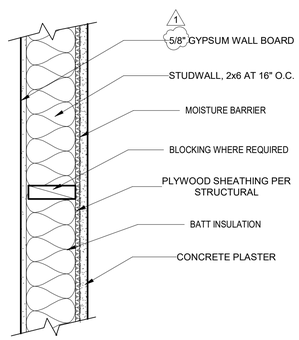

NEW EXTERIOR 2x6 WALL

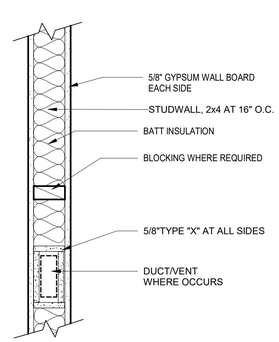

NEW INTERIOR 2x4 WALL

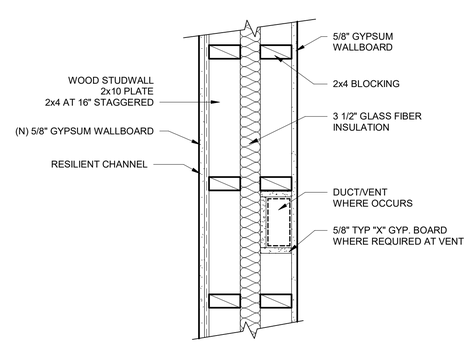

SECTION

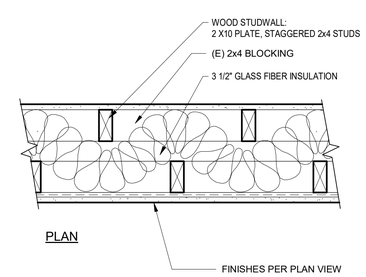

PLAN

1

1-HOUR UNIT SEPARATION (NEW CONSTRUCTION OR MODIFIED EXISTING WALL) STC 50

EXISTING WALLS TO HAVE SIMILAR CONSTRUCTION VERIFY WOOD STUDS. CONFIRM EXISTANCE OF INSULATION, AND PROVIDE NEW WHERE REQUIRED. REMOVE ONE SIDE OF GYP. BOARD, PROVIDE RESILIENT CHANNEL AND NEW GYP. BOARD FINISHES FOR CMPLETE ASSEMBLY.

WALL LEGEND
1 1/2" = 1'-0"

THESE DRAWINGS AND SPECIFICATIONS ARE THE PROPERTY AND COPYRIGHT OF LAUTERBACH & ASSOCIATES. ALL RIGHTS RESERVED, AND SHALL NOT BE USED ON ANY OTHER WORK OR PROJECT EXCEPT BY WRITTEN AGREEMENT WITH LAUTERBACH & ASSOCIATES. WRITTEN DIMENSIONS SHALL TAKE PRECEDENCE OVER SCALED DIMENSIONS AND SHALL BE VERIFIED ON THE JOB SITE. ANY DISCREPANCY SHALL BE BROUGHT TO THE NOTICE OF LAUTERBACH & ASSOCIATES PRIOR TO COMMENCEMENT OF ANY WORK.

LAUTERBACH & ASSOCIATES
ARCHITECTS INC.
David C. Kesterson, Architect • Ilona Scott, Architect • Mark S. Pettit, Architect
300 MONTGOMERY AVENUE, OXNARD, CALIFORNIA 93036 | 805-988-0912 | FAX 805-981-4510 | www.la-arch.com

LICENSED ARCHITECT ILONA SCOTT No. C11881 Ren. 06/21 STATE OF CALIFORNIA

CONCORD DRIVE APARTMENTS

2950 & 2956 CONCORD DRIVE
OXNARD, CA, 93036

CITY OF OXNARD HOUSING AUTHORITY

435 S. D STREET
OXNARD, CALIFORNIA 93030

NO	DESCRIPTION	DATE
	ISSUE	

JOB NO.	20-190209
DRAWN BY:	TJL
CHECKED BY:	ISS
PROJECT MANAGER:	ISS
PRINT DATE:	8/12/2020 8:22:52 AM

WALL LEGEND

A-602

G:\2019 Projects\20-190708 City of Oxnard\Set 4-Concord\Drawings\Architectural\2950 & 2956 Concord Drive - CD (Floor Plans).rvt

A Range of Comfort

Carrier delivers gas furnaces with a range of features and functionality. Check out this side-by-side comparison to see how our smart and efficient Performance™ Series condensing gas furnaces measure up against our Infinity® and Comfort™ models.

	Infinity® Series	Performance™ Series	Comfort™ Series
Motor Performance	Fully-communicating, variable-speed ECM operation	Non-communicating, variable-speed ECM operation	Non-communicating, multi-speed ECM operation
Media Cabinet	Included	Optional accessory ordered separately	Optional accessory ordered separately
Efficiency	Up to 98.5% AFUE	Up to 96.5% AFUE	Up to 96.5% AFUE
Durability	Fully insulated, 20-gauge steel cabinet and doors	Fully insulated, 20-gauge steel cabinet and doors	Heating compartment insulation, 20-gauge steel cabinet and doors
Recommended Control†	Infinity® System Control	Côr® Wi-Fi® Thermostat	Côr® Wi-Fi® Thermostat
Limited Warranty	10-year parts* Lifetime heat exchanger**	10-year parts* Lifetime heat exchanger**	10-year parts* Lifetime heat exchanger (59SC5)** 20-year heat exchanger (59SC2)

† Control sold separately, other options available.
* Upon timely registration. The warranty period is five years if not registered within 90 days of installation except where restricted by jurisdiction.
** Upon timely registration. The warranty period is 20 years if not registered within 90 days of installation except where restricted by jurisdiction.
Wi-Fi® is a registered trademark of Wi-Fi Alliance Corporation.

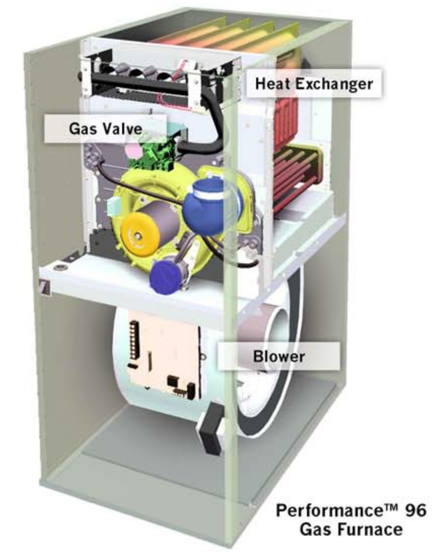

The Carrier Difference

If you could look under the hood of a Carrier® Performance Series condensing gas furnace, you'd see what drives the performance: a serious commitment to quality. Model 59TP6 includes a two-stage gas valve that can operate on low- or high-stage heat for quiet, consistent comfort. Our Performance ECM blower motor provides airflow that is optimized to your home's needs, resulting in enhanced comfort and humidity control as a part of your cooling system.

To squeeze as much of the heating efficiency from the gas you use as possible, Performance Series condensing gas furnaces include two heat exchangers. The primary heat exchanger does most of the work while a secondary heat exchanger squeezes additional heating energy to balance savings and comfort. Additional comfort-enhancing functions include ComfortFan™ technology, which allows you to select furnace fan speeds from a compatible thermostat.

Visit carrier.com for model comparisons and product specifications.
Explore the full line of Carrier® condensing gas furnaces and other system components to find the ideal fit for your home.
59TP6

F.A.U. (SECOND FLOOR UNIT) (FAU-1 SEE MECHANICAL PLAN)

NORITZ

Model NCC1991 Series Commercial Condensing Water Heater Specification Sheet

Job Name ______
Location ______
Architect/Engineer ______
Wholesaler ______
Contractor ______
Model No. ______
Gas Type ______
No. of Units ______ Total BTU/hr Input ______
Flow Rate (GPH) ______
Notes

- **Standard Input** - gas consumption ranges from 16,000 BTUh to 199,900 BTUh
- **Compact Design** - ANSI Z21.10.3/CSA 4.3 certified design that can be wall-mounted indoors with a -DV model or installed outdoors with an -OD model
- **Durable Stainless Steel Casing**
- **Heat Exchanger** - manufactured with commercial grade copper, 25% thicker piping than standard models
- **Venting Options** - available in Outdoor (-OD) or Direct Vent (-DV) model that can use either Schedule 40 PVC/CPVC
- **Direct Electronic Ignition**
- **Multi-System Capability** - units can be linked together by using either the optional 2-unit Quick Connect or multi-unit System Controller for up to 24 units.
- **Thermal Efficiency** - fully condensing, 94% efficient for use with natural gas and propane
- **Temperature Controls** - includes remote thermostat that can precisely adjust the output temperature from 100°F to 185°F
- **Safety Devices** - Flame Sensor, Overheat Prevention Device, Lightning Protection Device, Freeze Protection, Neutralizer Overfill
- **Five Year Limited Heat Exchanger Warranty for Commercial Use**
- **Five Year Limited Parts Warranty**
- **Approvals** - CSA, UPC, NSF, Low NOx Approved by SCAQMD [<14ng/J or 20ppm] This product complies with California AB 1953 Low Lead Law and section 1417(d) of the Safe Drinking Water Act

Model
NCC1991 - ____
☐ OD (Outdoor Vent)
☐ DV (Direct Vent)

Accessories
☐ Horizontal Hood Termination (#PVT-HL)
☐ 3" PVC Termination (#VK3-H-PVC)
☐ Birdscreen for 3" PVC/CPVC (#VT3-PVCS)
☐ Birdscreen for 4" PVC/CPVC (#VT4-PVCS)
☐ Condensate Neutralizer (#NC-1)
☐ Isolation Valves (#IK-WV-200-1)
☐ Pipe Cover (#PC-3S-SUS)
☐ Quick Connect Cord (#QC-2)
☐ SV Conversion Kit (#SV-CK-3)
System Controller
☐ 6-unit (#SC-301-6M)
☐ 12-unit (#SC-301-12M)
☐ 24-unit (#SC-301-24M)

NORITZ AMERICA CORPORATION
11160 Grace Avenue, Fountain Valley, CA 92708 Tel. 1-866-7NORITZ www.noritz.com

Dimensions

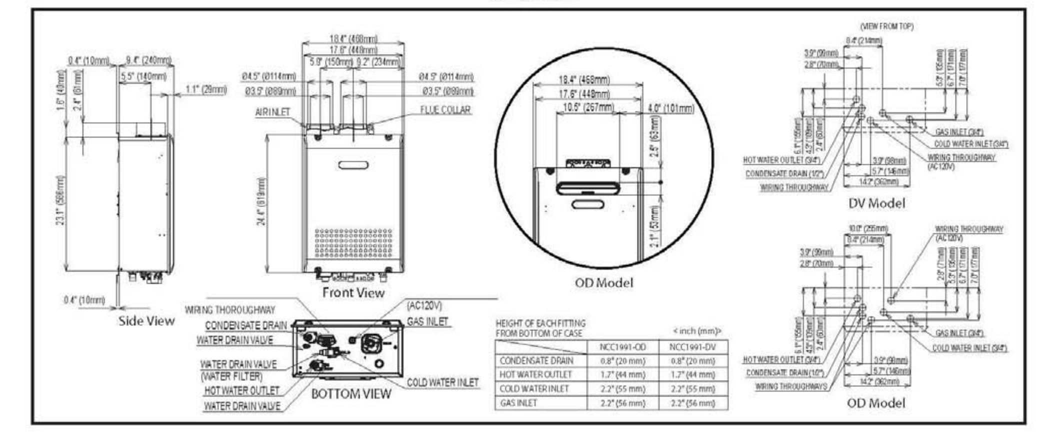

Flow Rates

Temperature Rise (°F)	30	40	45	50	60	70	80	90	100	110	120	130	140
Flow Rate (GPM)	11.1	9.3	8.4	7.4	6.2	5.3	4.6	4.1	3.7	3.4	3.1	2.9	2.7

Pressure Loss

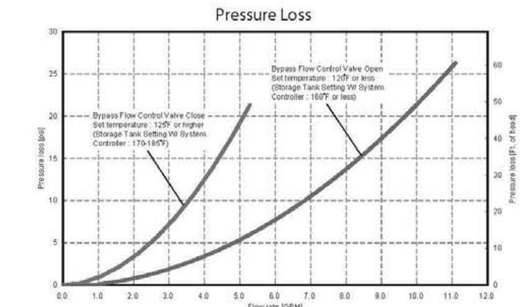

Specifications

Model Name			NCC1991-OD	NCC1991-DV
Weight			66 (pounds)	68 (pounds)
Operating Pressure			15 - 150 psi	
Gas Supply Pressure			NG: 4.0" - 10.5" LP: 8.0" - 14.0"	
Water Holding Capacity			0.5 Gallon (2 L)	
Connection Sizes	Water Inlet		3/4"	
	Hot Water Outlet		3/4"	
	Gas Inlet		3/4"	
	Condensate Drain		1/2" Threaded	
Power	Supply		120VAC(60Hz), less than 4 amperes	
	Consumption		NG: 78W LP: 80W Freeze Prevention 223W	NG: 81W LP: 83W Freeze Prevention 223W
Freeze Protection			Outdoor: -4°F	Indoor: -30°F
Temperature Settings		°F Mode	100-150°F (In 5°F intervals), 160, 170, 185°F (14 Options)	
		°C Mode	37-48°C (In 1°C intervals), 50-85°C (In 5°C intervals) (20 Options)	
Default Temperature Options		°F Mode	120, 135, 140, 185°F (Default is 120°F)	
		°C Mode	50, 57, 60, 85°C (Default is 50°C)	

Noritz America reserves the right to discontinue, or change at any time, the designs and/or specifications of its products without notice.

Rev. 11/13

WATER HEATER (SEE PLUMBING DRAWINGS)

---

10 YEAR LIMITED WARRANTY — NAT. GAS & LP

COZY

DIRECT-VENT
WALL FURNACE

The Cozy Direct-Vent Wall Furnace mounts on an outside wall and occupies minimal room space. The continuous seam-welded combustion chamber draws air from the outside and exhausts through a concentric vent system, which keeps the interior air warm and fresh. The louvered cabinet design maximizes airflow, providing uniform temperatures from floor to ceiling.

A telescoping vent assembly is included and fits a standard 5"- 9" wall thickness, eliminating the need for expensive and difficult-to-install vent pipe systems. A wall-mounted thermostat comes standard, or choose the optional built-in bulb stat kit (BBSK). Both provide precise temperature control, even if the electrical power fails. All controls include a 100% safety pilot and pressure regulator for safe, efficient operation.

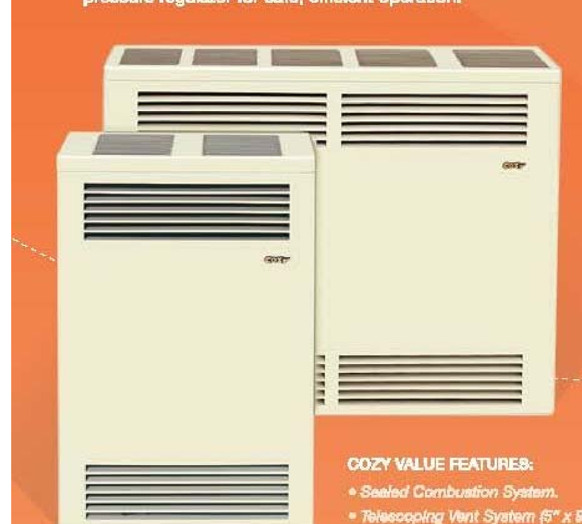

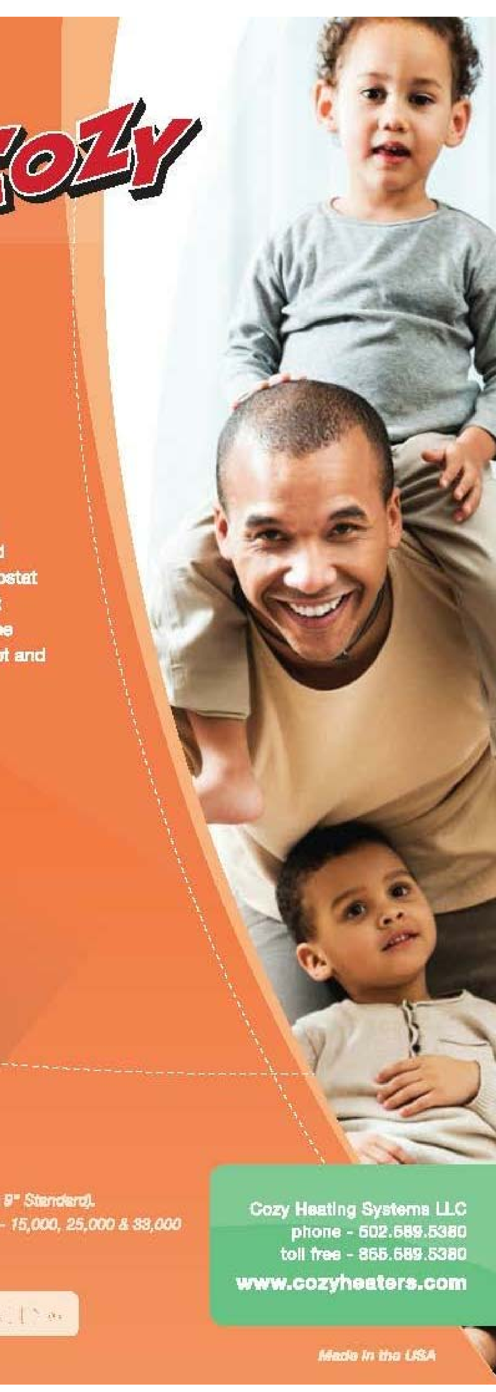

COZY VALUE FEATURES:
- *Sealed Combustion System.*
- *Telescoping Vent System (5" x 9" Standard).*
- *Millivolt Controls 3 BTU Sizes - 15,000, 25,000 & 33,000*

Cozy Heating Systems LLC
phone - 502.589.5380
toll free - 855.589.5380
www.cozyheaters.com

HARDI

Made in the USA

DIRECT-VENT
WALL FURNACE

COZY

Nat. Gas Model #* / LP Gas Model #	CDV155 / CDV156	CDV255 / CDV256	CDV335 / CDV336
BTU Input / Hr	15,000	25,000	33,000
Control	M. Volt / Wall Stat	M. Volt / Wall Stat	M. Volt / Wall Stat
Dimensions (H x W x D)	29 3/4" † x 18" x 9 3/4"	31 1/2" †† x 34 1/2" x 9 3/4"	31 1/2" †† x 34 1/2" x 9 3/4"
Gas Inlet Size	1/2"	1/2"	1/2"
Vent Size	9" *	9" *	9" *
Center of Horizontal Vent to Floor	22"	24 1/8"	24 1/8"
Optional Equipment	VK 1525 / 9" - 15" VK 1525 / 15" - 24" Fan DVB-3 BBSK	VK 1525 / 9" - 15" VK 1525 / 15" - 24" Fan DVB-3 BBSK	VK 33 / 9" - 15" - Fan DVB-3 BBSK
Approximate Shipping Weight	65 lbs	99 lbs	99 lbs

**Propane conversion kits available. Specify altitude if other than 2,000 ft elevation.*
*† Includes 1/2" Floor Clearance †† Includes 4" floor Clearance **Wall Opening*

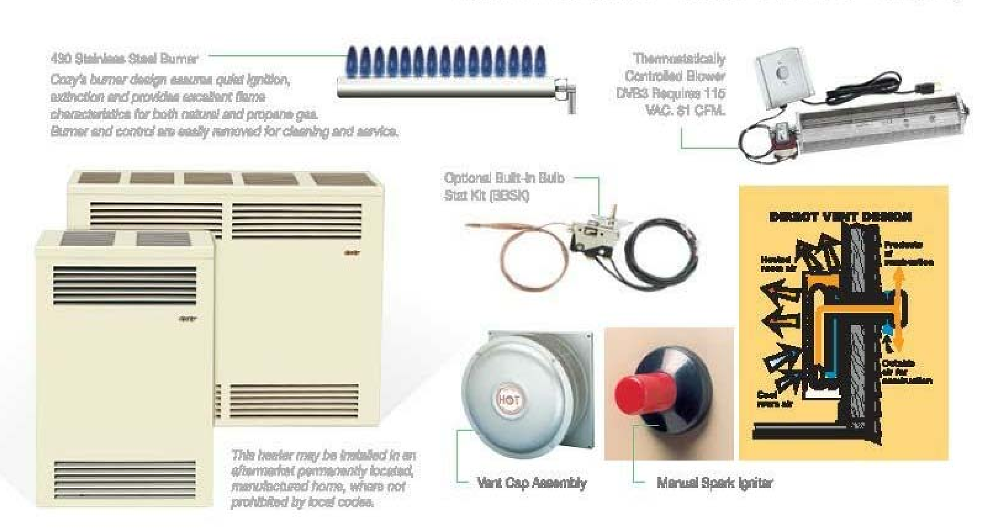

Cozy Heating Systems LLC
phone - 502.589.5380 fax - 502.589.5382 toll free - 855.589.5380 www.cozyheaters.com

**Warning: All Cozy Natural Gas and LP units must be installed by a certified installer.*

WALL HEATER AT BEDROOM (SH-2 SEE MECHANICAL PLAN)

1

WILLIAMS™

MONTEREY HOME FURNACES

Monterey Home Furnace models feature energy and money-saving operating costs. Easily recessed or surface-mounted options are great in homes, schools, cabins, apartments, offices and shops.

Heating rooms individually allows comfort in areas being used while saving fuel costs in unused areas.

For additional money-saving efficiency, install one of our optional blowers.

FEATURES
- No electricity required
- "Matchless" pilot igniter
- Easy installation
- Patented side-relief opening draft hood design reduces flue gas temperature to minimize normal heat loss
- Natural or propane models *(conversion kits available)*
- Automatic temperature and safety controls
- Resettable vent-limit safety switch

DUAL-WALL TOP-VENT 50,000 BTU/hr.

25,000 - 35,000 BTU/hr.

Williams' dual-wall model, with patented energy-maximizing side-relief draft hood openings, will heat two or more rooms quickly and economically. Conveniently installs in the wall to heat two adjacent rooms *(25,000 BTU/hr. on each side)*.

DESIGNED & ASSEMBLED IN THE USA SINCE 1916

WALL HEATER AT LIVINGROOM AREA (SH-1 SEE MECHANICAL PLAN)

WILLIAMS™

MONTEREY HOME FURNACES

MODEL NUMBER NATURAL	MODEL NUMBER PROPANE	BTU/hr. INPUT	BTU/hr. OUTPUT	EFFICIENCY PERCENT THERMAL	EFFICIENCY PERCENT AFUE	DIMENSIONS (INCHES) WIDTH	DEPTH	HEIGHT	THERMOSTAT	SHIPPING WEIGHT (LBS.)
SINGLE-SIDED FURNACES								CONVERSION KITS AVAILABLE		
2509622A	2509621A	25,000	17,870	72	70.1	16	6	65¾	MILLIVOLT	83
3509622A	3509621A	35,000	23,700	68	66	16	6	65¾	MILLIVOLT	83
DOUBLE-SIDED FURNACES								CONVERSION KITS AVAILABLE		
5009622A	5009621A	50,000	36,900	74	70	16	6 EACH SIDE	65¾	MILLIVOLT	137

Elevation rating from sea level to 2,000' Consult Owner's Manual for installation of product at elevations over 2000' 1/2" Gas Connection

FEATURES

"MATCHLESS" PILOT IGNITER
All models include a "matchless" pilot igniter that assures convenient pilot lighting without matches.

CONTEMPORARY FINISH
Soft-white, powder-coat, heat-resistant finish to compliment any decor.

INTERIOR FURNACE CLEARANCES
1" from an intersecting wall.
16" from the top of the appliance to the ceiling or other obstructions.
48" from the furnace front to draperies, furniture or other obstructions, or other combustibles.
2 ½" from finished floor.

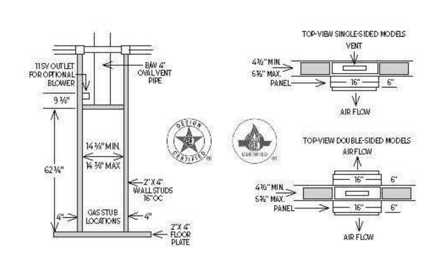

IMPORTANT
- Read owner's manual before using/installing.
- Photographs are representative only.
- Check local codes and ordinances for permitted uses.
- Consult installation manual for clearances prior to installation.
- We reserve the right to amend product specifications without notice.
- Installation and servicing recommended by a qualified service person.
- Please read the warranty for any limitations of disclaimers. Combustion chamber carries a 10-year limited warranty. All other parts carry a one-year limited warranty.
- Venting must comply with the "Venting and Chimney Requirements" section of the instruction manual.
- Massachusetts Approval GI-0816-23.

WARNING: This product can expose you to chemicals can which is known including to the State epichlorohydrin of defects California to and/or cause other cancer reproductive and birth harm. For more information go to www.p65warnings.ca.gov

ACCESSORIES

THERMOSTAT SOLD SEPARATELY
part number P322016

BLOWER
Attaches to top of the Monterey furnaces with ON/OFF switch or automatic operation. Improves circulation of warm air and reduces temperature differences in the room. Optional deluxe blower for increased airflow. Two blowers may be used on 50,000 BTU/hr. units.
Model 2901 - 100 CFM, shipping weight 9 lbs.
Model 2907 - 125 CFM, shipping weight 9 lbs.

REAR-OUTLET REGISTER
Chain operated damper with register flush on rear wall, adjusts amount of heat delivered through rear register. Motorized rear outlet register for increased airflow also available.
Model 6901 - Standard model, shipping weight 4 lbs.
Model 6919 - Motorized model for recessed installation.
Model 6920 - Motorized model for surface mounted installation. Shipping weight 6919 and 6920, 10 lbs.

CONVERSION KITS
Natural gas to LP or LP to Natural gas selections available.

OVAL-VENT STARTER KIT
Contains hold down plate, oval-to-round adapter, spacer plates and two pieces of 2-foot lengths of oval pipe.
Model 9929 - USA
Model 9930 - Canada
Shipping weight 9 lbs.

REPLACEMENT FACE PANEL
Soft white powder coat face panel
Model 4915 - shipping weight 30 lbs.

VENT ADAPTER
Surface-mounted furnace installations only.
Model 9902 - Without optional blower installed.
Model 9910 - With optional blower installed.
Shipping weight 3 lbs.

FREE-STANDING KIT
Allows single sided furnaces to be surface mounted instead of recessed Ideal for remodeling in exiting masonry construction or when studs are substandard. *(furnace and face panel not included.)*
Model 4901 - Shipping weight 23 lbs.

250 W. Laurel Street · Colton, CA 92324 USA Subject to change without notice © 2019 Williams L1073, 8-19

LAUTERBACH & ASSOCIATES
A R C H I T E C T S • I N C.
David C. Kesterson, Architect • Ilona Scott, Architect • Mark S. Pettit, Architect
300 MONTGOMERY AVENUE, OXNARD, CALIFORNIA 93036 | 805-988-0912 | FAX 805-981-4510 | www.la-arch.com

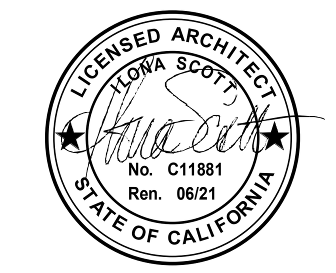

CONCORD DRIVE APARTMENTS
2950 & 2956 CONCORD DRIVE
OXNARD, CA, 93036

CITY OF OXNARD HOUSING AUTHORITY
435 S. D STREET
OXNARD, CALIFORNIA 93030

NO	DESCRIPTION	DATE
1	PLAN CHECK SUBMITTAL	07/31/2020

ISSUE

JOB NO. 20-190209

DRAWN BY: Author
CHECKED BY: Checker
PROJECT MANAGER: Approver
PRINT DATE: 8/10/2020 8:56:05 AM

MECHANICAL PRODUCT INFORMATION

A-701

THESE DRAWINGS AND SPECIFICATIONS ARE THE PROPERTY AND COPYRIGHT OF LAUTERBACH & ASSOCIATES. ALL RIGHTS RESERVED, AND SHALL NOT BE USED ON ANY OTHER WORK OR PROJECT EXCEPT BY WRITTEN AGREEMENT WITH LAUTERBACH & ASSOCIATES. WRITTEN DIMENSIONS SHALL TAKE PRECEDENCE OVER SCALED DIMENSIONS AND SHALL BE VERIFIED ON THE JOB SITE. ANY DISCREPANCY SHALL BE BROUGHT TO THE NOTICE OF LAUTERBACH & ASSOCIATES PRIOR TO COMMENCEMENT OF ANY WORK

G:\2019 Projects\20-190708 City of Oxnard-Set 4-Concord\Drawings\Architectural\2950 & 2956 Concord Drive - CD (Floor Plans).rvt

MANDATORY MEASURES

Maximum length of flexible duct and connectors shall not be more than 5 feet. Flexible ducts shall not be used in lieu of rigid elbows.

Sec 603.4.1

Each space-conditioning system shall be installed with controls that comply with the following:

1) Capable of automatically shutting off the system during periods of non-use and shall have:
   (1) An automatic time switch control device complying with Sec. 110.9, with an accessible manual override that allows operation of the system for up to 4 hours; or
   (2) An occupancy sensor; or
   (3) A four-hour timer that can be manually operated.
   EXCEPTION: Mechanical systems serving retail stores and associated malls, restaurants, grocery stores, churches, and theaters equipped with 7-day programmable timers.
2) Automatically restart and temporarily operate the system as required to maintain:
   (1) A setback heating thermostat set point, if the system provides mechanical heating;
   EXCEPTION: Area with the design winter outdoor temperature of greater than 32° F.
   (2) A setup cooling thermostat set point, if the system provides mechanical cooling.
   EXCEPTION: Area with the design summer outdoor temperature of less than 100°F.
3) Multipurpose room less than 1000 ft² , classrooms greater than 750 ft² and conference, convention, auditorium and meeting center rooms greater than 750 ft² that do not have processes or operations that generate dusts, fumes, vapors or gasses shall be equipped with occupant sensor(s) to accomplish the following during unoccupied periods:
   (1) Automatically setup the operating cooling temperature set point by 2°F or more and setback the operating heating temperature set point by 2°F or more; and
   (2) Automatically reset the minimum required ventilation rate with an occupant sensor ventilation control device according to Section 120.1(c)5.
   Exception to Sections 120.2(e)3: If Demand Control Ventilation is implemented as required by Section 120.1(c)3 and 120.1(4).

Sec. 120.2 (e)

These drawings are the instruments of service and are the property of ALL-TRADE ENGINEERING. All designs and other information contained on these drawings are for use on the specified project and shall not be used on other projects, or for additions to this project, or for completion of this project by others without first obtaining the expressed written permission and consent of ALL-TRADE ENGINEERING. These drawings shall not be reproduced, changed or copied in any form or manner whatsoever without first obtaining the expressed written permission and consent of ALL-TRADE ENGINEERING nor are they to be assigned to any third party without said written permission and consent. All designs and information contained in these drawings are based on information provided by the client. ALL-TRADE ENGINEERING has relied solely on said client information in the preparation of the designs and other information contained on these drawings. ALL-TRADE ENGINEERING assumes no responsibility for any work performed based on said information. The designs and other information contained on these drawings may be subject to modifications as required by additional information including, but not limited to, final boundary survey, survey of as-built conditions, government agency input, program modifications, etc. These plans are only valid for six months from the plot date due to Code changes, industry standards, and site conditions.

EQUIPMENT SCHEDULE

UNIT	TONS	MODEL	COOLING (BTUH)	AFUE	HEATING (BTUH)	CFM	MCA	MOCP	VOLTAGE	WEIGHT (LB.)	LIQUID LINE	VAPOR LINE	REMARKS
FAU-1		CARRIER #59TP5A080E17--16		96.2	78,000 / 50,000	1,360	GAS	GAS	115V 1P 60Hz	156			VERTICAL. PROVIDE DUCT SMOKE DETECTOR
SH-1	2.0 T	WILLAMS COMFORT #3509622A		.81 AFUE	23,700	110 - 162	GAS	GAS	120V 1P 60Hz	57			WALL MOUNTED UNIT
SH-2	2.0 T	COZY HEATING #CDV255D		.81 AFUE	25,000	110 - 162	GAS	GAS	120V 1P 60Hz	80			UNIT TO BE USED IN BEDROOMS MOUNTED ON EXTERIOR WALL
EF-1		PANASONIC FV-10VS1				100	0.2	20	120V	20			INTEGRAL BACKDRAFT DAMPER. INTERLOCK W/ HUMIDISTAT SWITCH

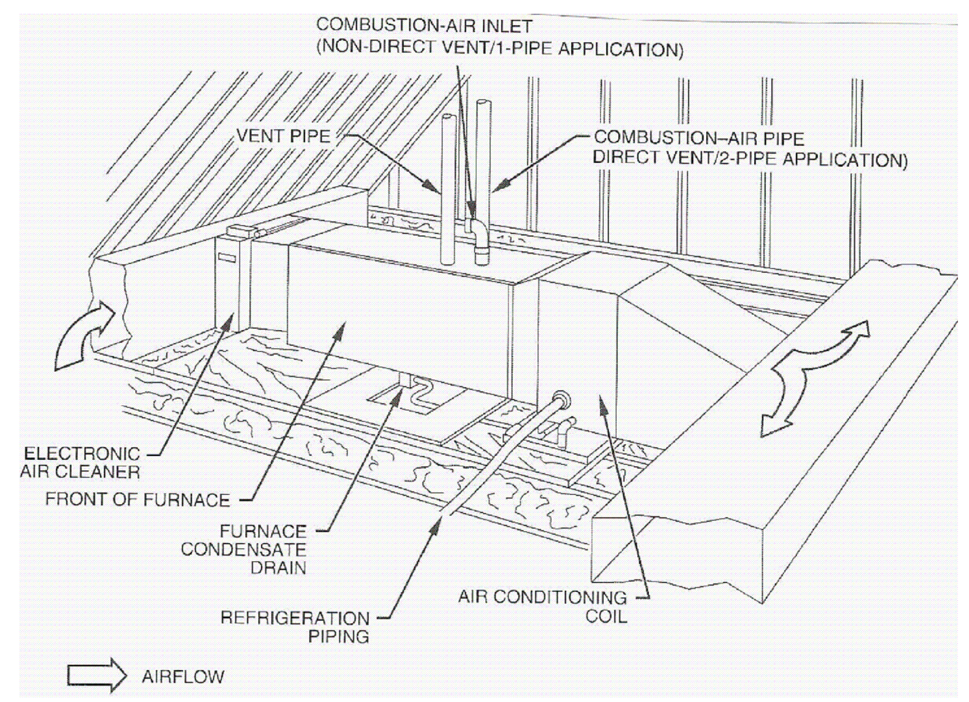

1. Provide an attic access a minimum of 22"x30" not over 20' from the equipment.
2. Provide an unobstructed passageway 30" wide x 30" high with solid continuous flooring from the access to the equipment/control panel. The passageway shall be at least as large as the largest component of the appliance. Provide a level, unobstructed work platform not less than 30"X30" square in front of the equipment with 30" headroom. [§305 CMC]
3. Provide a 120V receptacle and a light near the equipment. The light switch shall be located at the attic access.
4. Provide a 3/4" primary condensate drain. Provide a 3/4" secondary condensate drain line which terminates over a window.
5. All combustion air openings, including attic vents, shall be covered with a corrosion resistant screen with a 1/4" mesh.
6. Solid and liquid lines shall be located a minimum of 6" above the flood level rim of the condensing units.
7. See detail 2/- for equipment support.

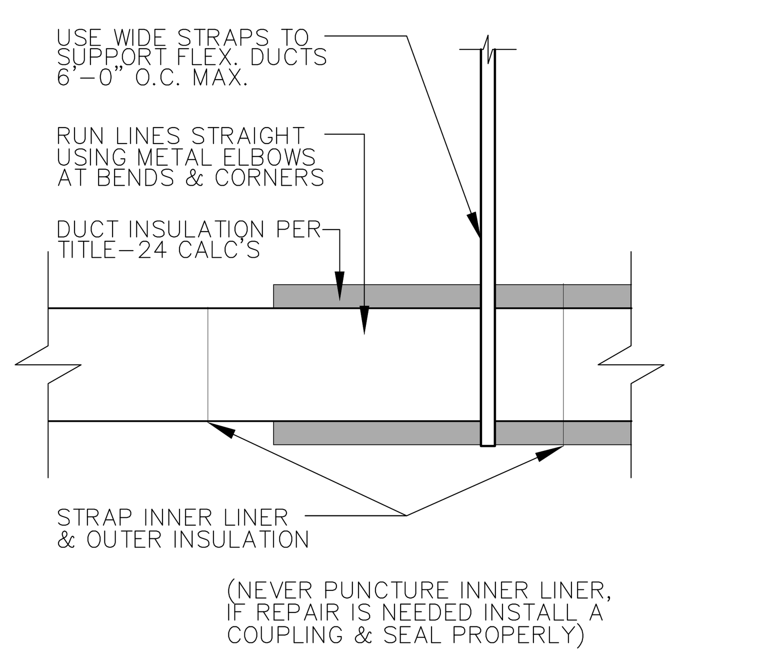

1 FLEX DUCT SUPPORT

SCALE: N.T.S.

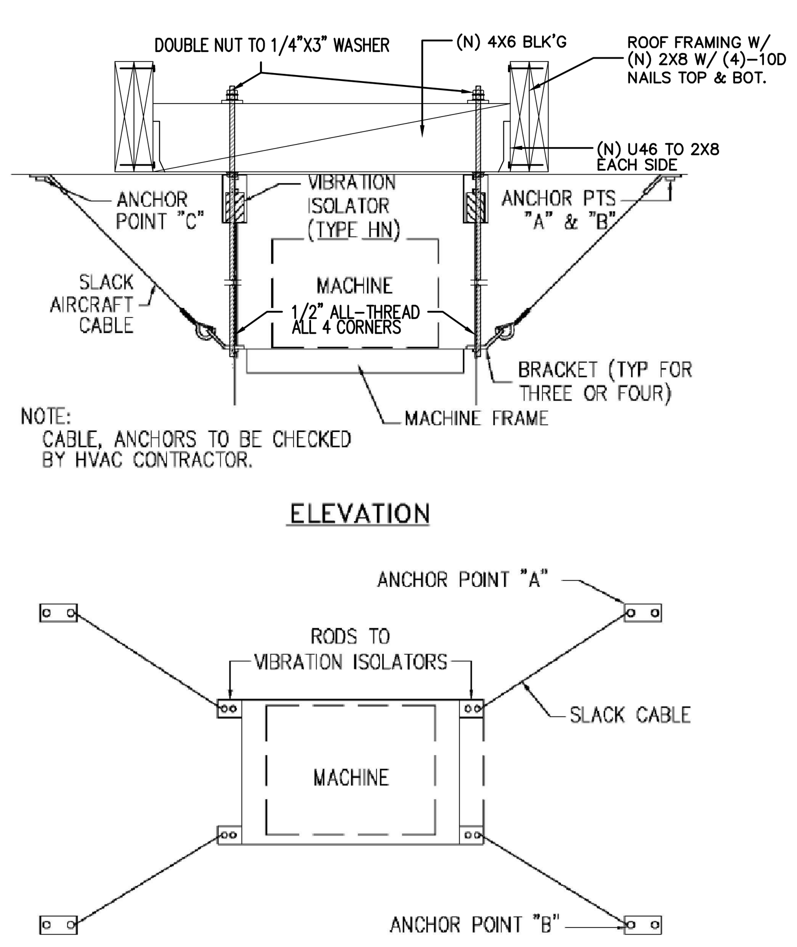

2 EQUIPMENT SUPPORT

SCALE: N.T.S.

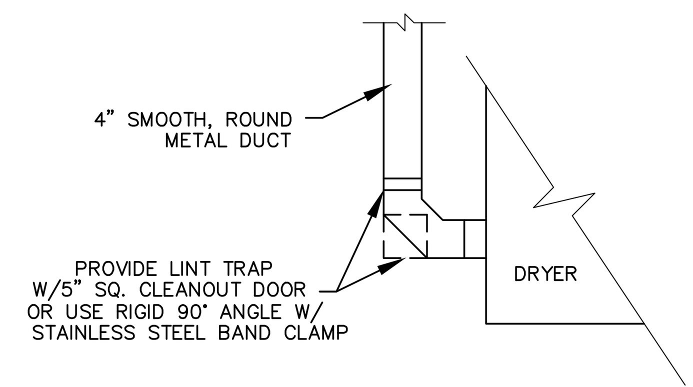

1 VERTICAL DRYER VENT CLEANOUT

SCALE: N.T.S.

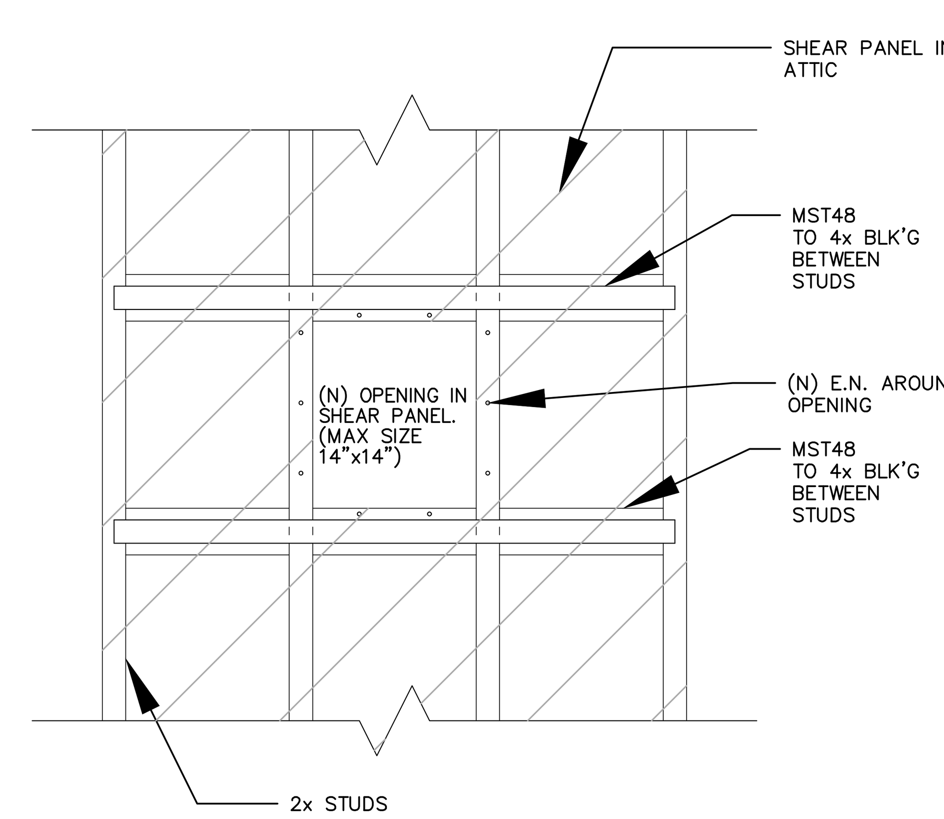

1 DUCT PENETRATIONS

SCALE: N.T.S.

MECHANICAL NOTES

1. All work shall be in accordance and comply with the latest applicable city ordinance and the 2019 CMC.
2. It is the intent of these drawings that this be a complete mechanical installation. Any apparent errors shall be brought to the attention of the designer and/or tenant prior to proceeding.
3. Contractor shall verify all existing conditions versus new installations to assure proper new installations can be completed properly prior to proceeding.
4. These plans shall be used only after approvals and permits have been secured by the proper jurisdiction of the department of building and safety.
5. All drawings and details are provided as a diagrammatic version of the proposed work. The contractor shall be held liable and responsible for all field verifications of equipment, materials, and installations.
6. Contractor shall verify all equipment is installed in accordance with manufacturer's recommendations and local code requirements prior to any installations.
7. All duct work shall be provided, installed, sealed, and insulated per chapter 6 of the 2019 CMC and 'SMACNA HVAC Duct Construction Standards.'
8. Means for interrupting the electrical supply to the air conditioning equipment and to its associated cooling tower shall be provided within sight of and not over 50 ft. from the air–conditioner and cooling tower. [§903.7 CMC]
9. All controls shall be from 36" to 48" AFF max and within sight of the fixtures.
10. Penetrations of fire–resistive walls, floor–ceilings and roof ceilings shall be protected as required in CBC Sections 712.3 & 712.4.
11. Contractor doing the mechanical work is responsible for verifying in the field that the HVAC system is capable of providing the necessary minimum outside air volume.
12. Air balancing may be required and shall be performed by the mechanical contractor doing the work.
13. All OSA intakes and makeup air intakes shall be provided and installed a minimum of 10' away from plumbing, toilet, water closets, and all appliance venting. Intakes may be located 3' below said appliance venting.
14. The contractor shall be solely responsible for construction mean, methods, sequences, of construction and the safety of workmen. Comply with all OSHA regulations.
15. No piping, ductwork, controls, etc., shall be installed or routed above electrical panels and equipment or through elevator rooms or shafts.
16. The mechanical and electrical contractors shall coordinate the electrical characteristics of all mechanical equipment prior to ordering of equipment. No additional payment will be made for lack of contractor coordination of electrical characteristics.
17. All mechanical and electrical system components shall be routed tight to underside of structure and through joists or trusses where possible. Coordinate installation to preserve headroom, equipment access, and architectural clearances for finishes, including ceiling heights. Coordinate with all other trades and do not conflict with the architectural requirements for the finished construction. Provide offsets where required to coordinate with other trades.
18. Refer to architectural reflected ceiling plans for locations of all grilled and diffusers.
19. All equipment and materials shall be new, free of defects and U.L. listed/labeled.
20. All cutting and chasing of the building construction required for this work shall be by this contractor unless shown on architectural drawings and confirmed as to size and location prior to new construction. Cutting shall be in a neat and workmanlike manner.
21. Exact location of rooftop mechanical units shall be approved by the structural engineer of record. Mechanical contractor shall furnish and install all supplemental support steel for units and roof duct penetrations after approval of structural engineer of record.
22. Fabricate and erect all ductwork to ASHRAE and SMACNA standards from #1 galvanized steel.
23. All ductwork in areas without ceilings that is to be painted shall be provided with paint grip finish. Comply with SMACNA standards and NFPA bulletin 90A requirements.
24. Ductwork shall be SMACNA low pressure construction 2" static pressure rating with Seal Class B seams and joints.
25. Flexible ducts shall be independently supported from the structure and connected with plastic drawbands tightened with manufacturer's tool. Flexible ducts are not permitted in rooms without ceilings. Flexible ducts shall be ATCO rubber type 070, 1 ½" insulation and rated at 10" W.C. for sizes through 12", UL listed, and meet 25/50 flame and smoke test. No interior color other than black is permitted for flexible ducts. Equivalent by Valuflex, Flexaire, Flexible Technologies, Thermaflex, or Genflex.
26. Include all turning veins, manual dampers, flexible connectors, grills and diffusers, acoustic lining, and other sheet metal accessories for the project. Volume dampers to be of opposed blade construction with locking quadrants. Provide volume dampers at supply air runouts to all ceiling diffusers.
27. All branch connection fittings in rectangular ductwork shall be 45 AVPree transition type, conical fittings, or spin–in fittings with integral air scoops. Butt fittings are not acceptable.
28. Acoustic line all rectangular ducts indicated on drawings with minimum 1" thick non–flaking, coated medium density liner. Apply to manufacturer's recommendations. Duct dimensions are outside dimensions, and include acoustic lining.
29. Provide curbs for all roof openings for ducts, flues, piping, and equipment. Curbs shall be furnished as accessories to the equipment or 8" high plate or equal equipment supports spanning structure and flashed into roofing. Roof curbs shall be compatible with roofing system and shall match roof flashing, and patching of roof shall be by a certified roofing contractor approved by the owner/tenant and paid for by the mechanical contractor.
30. All rigid round ductwork to be internally insulated.
31. From each air conditioning unit, install 4" deep trapped condensate drain with cleanout and terminate as shown on plans.
32. HVAC contractor to furnish all HVAC equipment indicated and/or scheduled on the drawings complete with bases, insulators, supports, and other required accessories.
33. Completely install equipment and place in proper operation per manufacturer's recommendations, lubricate and adjust as required. Furnish and install clean set of filters prior to balancing.
34. Equipment to be make and model as scheduled unless owner approved, equivalent quality and performance equipment is submitted as substitution. All substitutions subject to acceptance without qualification by owner/tenant and design engineer.
35. Furnish and install all controls for HVAC systems. Provide all relays and devices required for complete operation. Mount all controls furnished as accessories to equipment and provide all control wiring or power wiring required for control system where not specifically shown on electrical plans. All exposed wiring shall be in EMT conduit per CEC. Concealed wiring in ceiling plenums may be UL listed plenum rated cable neatly supported in wirings.
36. No thermostat shall be installed above any heat producing equipment.
37. Supports and hangers are to be provided to properly support, secure and align ductwork and to meet conditions. Provide seismic bracing for hangers and supports supporting ductwork. Comply with the latest edition of the Sheet Metal and Air Conditioning Contractors National Association Inc. (SMACNA) Seismic Restraint Manual as approved by ANSI.
38. At ducts to equipment, provide waterproof vent fabric flexible connections with a minimum of 6" full length, and approved by the AHJ. Where exposed to the outside, provide sun shield over the flexible connection.
39. Each rooftop AC unit and outdoor unit shall be mounted on freestanding spring type isolators with seismic restraints for lateral and vertical motion. Mounting shall be hot dipped galvanized.
40. Refrigerant piping to be Type "L" copper with brazed fittings using silver solder installed per the manufacturer's instructions for R–22 service. Piping shall be insulated with 1" thick insulation with all joints sealed with adhesive. Factory precharged piping may be used where length of run does not exceed 75'. Where insulation is exposed to weather it shall be covered with a jacket or protective/weather resistive paint which is a minimum of .016" thick.
41. Provide hangers and supports as required, straps and/or wire is unacceptable.
42. Coordinate work of this section with work of other sections to avoid conflicts. If required, provide shop drawings and submit to design engineer for approval.
43. Ensure that work of other sections is suitable to accommodate work of this section.
44. HVAC systems rated at 2000 cfm or greater shall be equipped with a duct smoke detector to automatically shut off the HVAC system if smoke is detected. The detectors shall be installed in the main supply duct downstream of any filters.
45. Condensate from cooling coils and overflow of evaporative coolers shall be collected and discharged to an approved plumbing fixture or disposal area. CMC Sec. 310.1.
46. Duct systems used with blower type equipment which are portions of a heating, cooling, absorption, evaporative cooling or outdoor air ventilation system shall be sized in accordance with Chapter 17 of the 2019 CMC.

REVISIONS

AVP 2/12/20

DRAWINGS VALID ONLY WITH ENGINEER'S WET SIGNATURE OVER SEAL ON EACH SHEET IN INK

JOB NAME

PROPOSED WORK FOR:
1357 ALTHEA DR.
OXNARD, CA. 93036

ALL-TRADE
Engineering & Design
17 EAST HIGH STREET
MOORPARK, CA
T:805-552-4000
F:805-380-4551
JUDDSALLTRADE@YAHOO.COM
www.AllTradeEngineering.com

SHEET TITLE

HVAC
NOTES/DETAILS

REGISTERED PROFESSIONAL ENGINEER SHANE DENNIS JUDD No. C70991 Exp. 06-30-21 CIVIL STATE OF CALIFORNIA

REGISTERED PROFESSIONAL ENGINEER SHANE DENNIS JUDD No. M36632 Exp. 12-31-21 MECHANICAL STATE OF CALIFORNIA

M-0.0

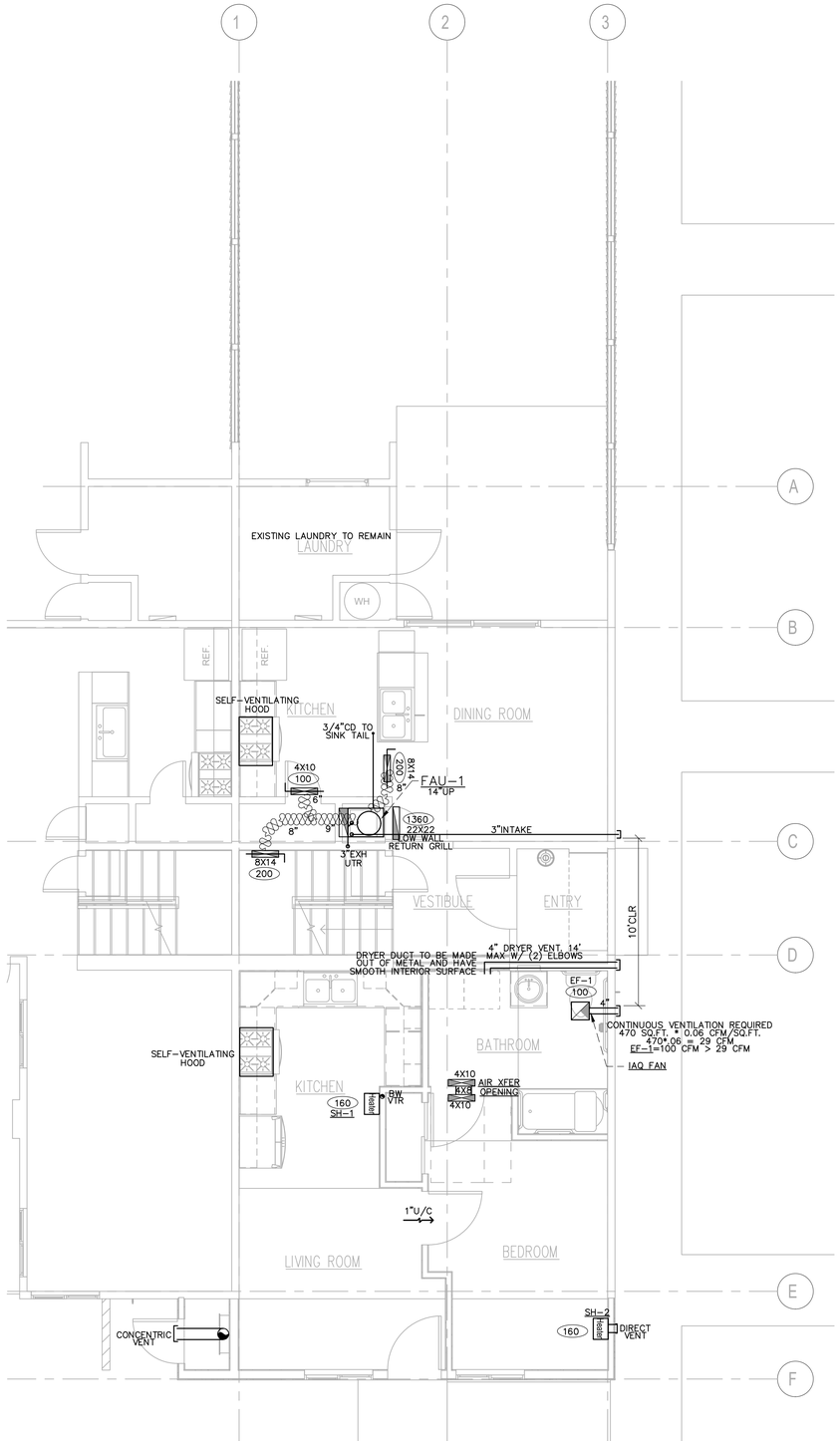

FIRST FLOOR HVAC PLAN

SCALE: 1/4":12"

HVAC LEGEND

- EXHAUST FAN – SEE SCHEDULE
- ##"X##" SUPPLY AIR REGISTER
- ##"X##" RETURN AIR REGISTER
- DESIGN CFM
- DUCT SMOKE DETECTOR
- VOLUME DAMPER
- POINT OF CONNECTION (VIF)
- 26 GA FLEXIBLE DUCT/DIAMETER PROVIDE R-6 INSULATION
- 26 GA EXPOSED RIGID DUCT/DIAMETER
- DDC THERMOSTAT – WSHP#
- DUCT ROUTING INSTRUCTION (XXXXX)
- SHUT OFF VALVE

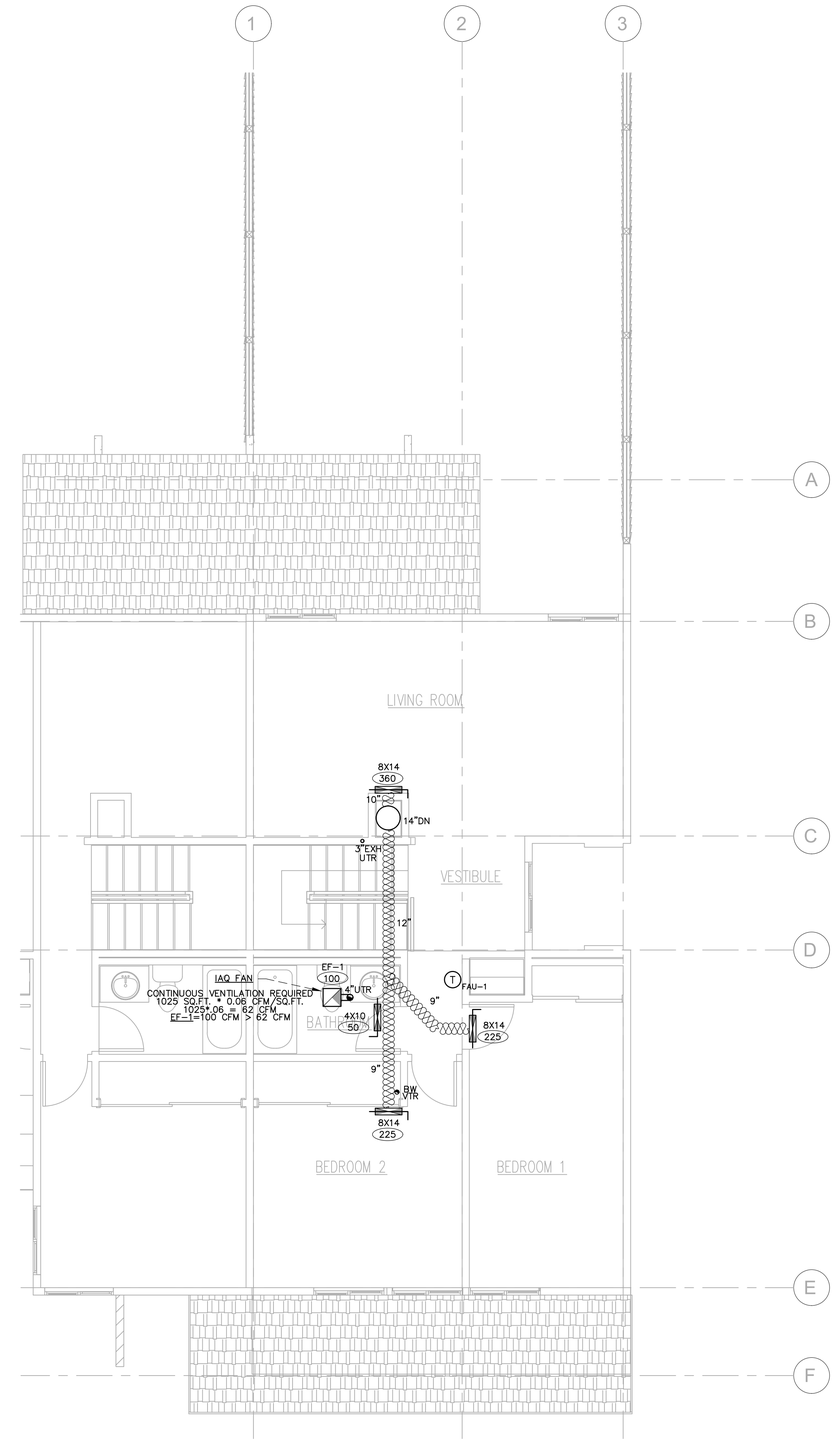

SECOND FLOOR HVAC PLAN

SCALE: 1/4":12"

REVISIONS

AVP
2/12/20

JOB NAME

PROPOSED WORK FOR:
1357 ALTHEA DR.
OXNARD, CA. 93036

DRAWINGS VALID ONLY WITH ENGINEER'S WET SIGNATURE OVER SEAL ON EACH SHEET IN INK

ALL-TRADE
Engineering & Design
17 EAST HIGH STREET
MOORPARK, CA
T:805-529-6000
F:805-529-4531
JOE@ALLTRADEWHOO.COM
www.alltradeengineering.com

SHEET TITLE

HVAC PLAN

REGISTERED PROFESSIONAL ENGINEER
SHane Bennett
No. E-18991
Exp. 06-30-21
CIVIL
STATE OF CALIFORNIA

REGISTERED PROFESSIONAL ENGINEER
SHane Bennett
No. M34812
Exp. 12-31-21
MECHANICAL
STATE OF CALIFORNIA

M-1.0

These drawings are the property of ALL-TRADE ENGINEERING, and are not to be copied, or ALL-TRADE ENGINEERING, allowed to be used for any purpose other than the specified project, and are not to be loaned, or shown to anyone other than those persons directly employed by the owner, ALL-TRADE ENGINEERING assumes no responsibility for any work performed based on field information, the designs and other information contained on these drawings may be subject to change based on information provided by the client, ALL-TRADE ENGINEERING is the sole owner of all the information in the preparation of the designs and other information contained on these drawings, ALL-TRADE ENGINEERING assumes no responsibility for any work performed based on field information, the designs and other information contained on these drawings may be subject to change based on information provided by the client, ALL-TRADE ENGINEERING is the sole owner of all the information in the preparation of the designs and other information contained on these drawings, ALL-TRADE ENGINEERING assumes no responsibility for any work performed based on field information, the designs and other information contained on these drawings may be subject

CERTIFICATE OF COMPLIANCE **CF1R-PRF-01E**

Project Name: 1-BR Apartment **Calculation Date/Time:** 2020-02-18T14:13:08-08:00 **(Page 1 of 8)**

Calculation Description: Title 24 Analysis **Input File Name:** 20-012 - ALTHEA CONCORD - LAUTERBACH (1 Bedroom).ribd19x

GENERAL INFORMATION					
01	Project Name	1-BR Apartment			
02	Run Title	Title 24 Analysis			
03	Project Location	1357 Althea Dr.			
04	City	Oxnard	05	Standards Version	2019
06	Zip code	93036	07	Software Version	EnergyPro 8.0
08	Climate Zone	6	09	Front Orientation (deg/ Cardinal)	180
10	Building Type	SingleFamily	11	Number of Dwelling Units	1
12	Project Scope	AdditionAlteration	13	Number of Bedrooms	1
14	New Cond. Floor Area (ft^2)	0	15	Number of Stories	1
16	Existing Cond. Floor Area (ft^2)	472	17	Fenestration Average U-factor	0.3
18	Total Cond. Floor Area (ft^2)	472	19	Glazing Percentage (%)	10.17%
20	ADU Bedroom Count	0	21	ADU Conditioned Floor Area	0

COMPLIANCE RESULTS	
01	Building Complies with Computer Performance
02	This building incorporates features that require field testing and/or verification by a certified HERS rater under the supervision of a CEC-approved HERS provider.
03	This building incorporates one or more Special Features shown below

ENERGY USE SUMMARY				
Energy Use (kTDV/ft^2-yr)	Standard Design	Proposed Design	Compliance Margin	Percent Improvement
Space Heating	8.16	4.68	3.48	42.6
Space Cooling	11.65	11.47	0.18	1.5
IAQ Ventilation	0	0	0	
Water Heating	37.71	38.03	-0.32	-0.8
Self Utilization Credit	n/a	0	0	n/a
Compliance Energy Total	**57.52**	**54.18**	**3.34**	**5.8**

CERTIFICATE OF COMPLIANCE **CF1R-PRF-01E**

Project Name: 1-BR Apartment **Calculation Date/Time:** 2020-02-18T14:13:08-08:00 **(Page 2 of 8)**

Calculation Description: Title 24 Analysis **Input File Name:** 20-012 - ALTHEA CONCORD - LAUTERBACH (1 Bedroom).ribd19x

REQUIRED SPECIAL FEATURES
The following are features that must be installed as condition for meeting the modeled energy performance for this computer analysis.
• New ductwork added is less than 40 ft. in length • Non-standard duct location (any location other than attic)

HERS FEATURE SUMMARY
The following is a summary of the features that must be field-verified by a certified HERS Rater as a condition for meeting the modeled energy performance for this computer analysis. Additional detail is provided in the building tables below. Registered CF2Rs and CF3Rs are required to be completed in the HERS Registry
Building-level Verifications: • Kitchen range hood Cooling System Verifications: • Verified EER • Verified SEER Heating System Verifications: • -- None -- HVAC Distribution System Verifications: • Duct Sealing required if a duct system component, plenum, or air handling unit is altered Domestic Hot Water System Verifications: • -- None --

BUILDING - FEATURES INFORMATION						
01	02	03	04	05	06	07
Project Name	Conditioned Floor Area (ft^2)	Number of Dwelling Units	Number of Bedrooms	Number of Zones	Number of Ventilation Cooling Systems	Number of Water Heating Systems
1-BR Apartment	472	1	1	1	0	1

ZONE INFORMATION						
01	02	03	04	05	06	07
Zone Name	Zone Type	HVAC System Name	Zone Floor Area (ft^2)	Avg. Ceiling Height	Water Heating System 1	Water Heating System 2
1 Bedroom Apartment	Conditioned	HVAC System1	472	9	DHW Sys 1	N/A

CERTIFICATE OF COMPLIANCE **CF1R-PRF-01E**

Project Name: 1-BR Apartment **Calculation Date/Time:** 2020-02-18T14:13:08-08:00 **(Page 3 of 8)**

Calculation Description: Title 24 Analysis **Input File Name:** 20-012 - ALTHEA CONCORD - LAUTERBACH (1 Bedroom).ribd19x

OPAQUE SURFACES										
01	02	03	04	05	06	07	08	09	10	11
Name	Zone	Construction	Azimuth	Orientation	Gross Area (ft^2)	Window and Door Area (ft2)	Tilt (deg)	Status	Verified Existing Condition	Existing Construction
Front Wall	1 Bedroom Apartment	R-15 Wall	180	Front	193.5	68	90	New	n/a	
Left Wall	1 Bedroom Apartment	R-15 Wall	270	Left	216	0	90	Existing	No	
Rear Wall	1 Bedroom Apartment	R-15 Wall	0	Back	193.5	0	90	Existing	No	
Right Wall	1 Bedroom Apartment	R-15 Wall	90	Right	216	0	90	Existing	No	
Raised Floor	1 Bedroom Apartment	R-19 Floor No Crawlspace	n/a	n/a	100	n/a	n/a	New	n/a	
Raised Floor 2	1 Bedroom Apartment	R-19 Floor No Crawlspace	n/a	n/a	372	n/a	n/a	New	n/a	

FENESTRATION / GLAZING																
01	02	03	04	05	06	07	08	09	10	11	12	13	14	15	16
Name	Type	Surface	Orientation	Azimuth	Width (ft)	Height (ft)	Mult.	Area (ft^2)	U-factor	U-factor Source	SHGC	SHGC Source	Exterior Shading	Status	Verified Existing Condition
Window	Window	Front Wall	Front	180			1	24	0.3	NFRC	0.23	NFRC	Bug Screen	New	n/a
Window 2	Window	Front Wall	Front	180			1	24	0.3	NFRC	0.23	NFRC	Bug Screen	New	n/a

OPAQUE DOORS					
01	02	03	04	05	06
Name	Side of Building	Area (ft^2)	U-factor	Status	Verified Existing Condition
Door	Front Wall	20	0.2	New	n/a

CERTIFICATE OF COMPLIANCE **CF1R-PRF-01E**

Project Name: 1-BR Apartment **Calculation Date/Time:** 2020-02-18T14:13:08-08:00 **(Page 4 of 8)**

Calculation Description: Title 24 Analysis **Input File Name:** 20-012 - ALTHEA CONCORD - LAUTERBACH (1 Bedroom).ribd19x

SLAB FLOORS								
01	02	03	04	05	06	07	08	09
Name	Zone	Area (ft2)	Perimeter (ft)	Edge Insul. R-value and Depth	Carpeted Fraction	Heated	Status	Verified Existing Condition
Slab	1 Bedroom Apartment	372	91	None	80%	No	Existing	No
Slab 2	1 Bedroom Apartment	100	91	None	80%	No	New	n/a

OPAQUE SURFACE CONSTRUCTIONS							
01	02	03	04	05	06	07	08
Construction Name	Surface Type	Construction Type	Framing	Total Cavity R-value	Interior / Exterior Continuous R-value	U-factor	Assembly Layers
R-15 Wall	Exterior Walls	Wood Framed Wall	2x4 @ 16 in. O. C.	R-15	None / None	0.095	Inside Finish: Gypsum Board Cavity / Frame: R-15 / 2x4 Exterior Finish: 3 Coat Stucco
R-19 Floor No Crawlspace	Exterior Floors	Wood Framed Floor	2x10 @ 16 in. O. C.	R-19	None / None	0.047	Floor Surface: Carpeted Floor Deck: Wood Siding/sheathing/decking Cavity / Frame: R-19 / 2x10

BUILDING ENVELOPE - HERS VERIFICATION			
01	02	03	04
Quality Insulation Installation (QII)	Quality Installation of Spray Foam Insulation	Building Envelope Air Leakage	CFM50
Not Required	Not Required	Not Required	n/a

CERTIFICATE OF COMPLIANCE **CF1R-PRF-01E**

Project Name: 1-BR Apartment **Calculation Date/Time:** 2020-02-18T14:13:08-08:00 **(Page 5 of 8)**

Calculation Description: Title 24 Analysis **Input File Name:** 20-012 - ALTHEA CONCORD - LAUTERBACH (1 Bedroom).ribd19x

WATER HEATING SYSTEMS									
01	02	03	04	05	06	07	08	09	10
Name	System Type	Distribution Type	Water Heater Name (#)	Solar Fraction (%)	Compact Distribution	HERS Verification	Status	Verified Existing Condition	Existing Water Heating System
DHW Sys 1	Domestic Hot Water (DHW)	Standard Distribution System	DHW Heater 1 (1)	0	None	n/a	New	NA	

WATER HEATERS														
01	02	03	04	05	06	07	08	09	10	11	12	13	14
Name	Heating Element Type	Tank Type	# Units	Tank Vol. (gal)	Energy Factor or Efficiency	Input Rating or Pilot	Tank Insulation R-value (Int/Ext)	Standby Loss or Recovery Eff.	1st Hr. Rating or Flow Rate	NEEA Heat Pump Brand or Model / Other	Tank Location or Ambient Condition	Status	Verified Existing Condition
DHW Heater 1	Natural Gas	Consumer Instantaneous	1	0	0.81-UEF	200000-Btu/Hr	0	n/a	n/a	n/a	n/a	New	

WATER HEATING - HERS VERIFICATION							
01	02	03	04	05	06	07	08
Name	Pipe Insulation	Parallel Piping	Compact Distribution	Compact Distribution Type	Recirculation Control	Central DHW Distribution	Shower Drain Water Heat Recovery
DHW Sys 1 - 1/1	Not Required	Not Required	Not Required	None	Not Required	Not Required	Not Required

CERTIFICATE OF COMPLIANCE **CF1R-PRF-01E**

Project Name: 1-BR Apartment **Calculation Date/Time:** 2020-02-18T14:13:08-08:00 **(Page 6 of 8)**

Calculation Description: Title 24 Analysis **Input File Name:** 20-012 - ALTHEA CONCORD - LAUTERBACH (1 Bedroom).ribd19x

SPACE CONDITIONING SYSTEMS											
01	02	03	04	05	06	07	08	09	10	11	12
Name	System Type	Heating Unit Name	Cooling Unit Name	Fan Name	Distribution Name	Required Thermostat Type	Heating Equipment Count	Cooling Equipment Count	Status	Verified Existing Condition	Existing HVAC System
HVAC System1	Heating and cooling system other	Heating Component 1	Cooling Component 1	HVAC Fan 1	Air Distribution System 1	Setback	1	1	New	No	n/a

HVAC - HEATING UNIT TYPES				
01	02	03	04	05
Name	System Type	Number of Units	Heating Efficiency Type	Efficiency
Heating Component 1	Gas wall furnace	1	AFUE	96

HVAC - COOLING UNIT TYPES							
01	02	03	04	05	06	07	08
Name	System Type	Number of Units	Efficiency EER	Efficiency SEER	Zonally Controlled	Mult-speed Compressor	HERS Verification
Cooling Component 1	Central split AC	1	12.5	15	Not Zonal	Single Speed	Cooling Component 1-hers-cool

HVAC COOLING - HERS VERIFICATION					
01	02	03	04	05	06
Name	Verified Airflow	Airflow Target	Verified EER	Verified SEER	Verified Refrigerant Charge
Cooling Component 1-hers-cool	Not Required	0	Required	Required	Not Required

CERTIFICATE OF COMPLIANCE **CF1R-PRF-01E**

Project Name: 1-BR Apartment **Calculation Date/Time:** 2020-02-18T14:13:08-08:00 **(Page 7 of 8)**

Calculation Description: Title 24 Analysis **Input File Name:** 20-012 - ALTHEA CONCORD - LAUTERBACH (1 Bedroom).ribd19x

HVAC - DISTRIBUTION SYSTEMS																
01	02	03	04	05	06	07	08	09	10	11	12	13	14	15	16
			Duct Ins. R-value		Duct Location		Surface Area								
Name	Type	Design Type	Supply	Return	Supply	Return	Supply	Return	Bypass Duct	Duct Leakage	HERS Verification	Status	Verified Existing Condition	Existing Distribution system	New Ducts 40 ft
Air Distribution System 1	Conditioned space-entirely	Non-Verified	R-6	R-6	Conditioned Zone	Conditioned Zone	n/a	n/a	No Bypass Duct	Existing (not specified)	Air Distribution System 1-hers-dist	Existing + New	No	n/a	n/a

HVAC - FAN SYSTEMS			
01	02	03	04
Name	Type	Fan Power (Watts/CFM)	Name
HVAC Fan 1	HVAC Fan	0.58	HVAC Fan 1-hers-fan

HVAC FAN SYSTEMS - HERS VERIFICATION		
01	02	03
Name	Verified Fan Watt Draw	Required Fan Efficiency (Watts/CFM)
HVAC Fan 1-hers-fan	Not Required	0

CERTIFICATE OF COMPLIANCE **CF1R-PRF-01E**

Project Name: 1-BR Apartment **Calculation Date/Time:** 2020-02-18T14:13:08-08:00 **(Page 8 of 8)**

Calculation Description: Title 24 Analysis **Input File Name:** 20-012 - ALTHEA CONCORD - LAUTERBACH (1 Bedroom).ribd19x

DOCUMENTATION AUTHOR'S DECLARATION STATEMENT	
I, I certify that this Certificate of Compliance documentation is accurate and complete.	
Documentation Author Name: Shane Judd	Documentation Author Signature: Shane Judd
Company: All-Trade Engineering	Signature Date: 02/18/2020
Address: 17 E High St.	CEA/ HERS Certification Identification (If applicable):
City/State/Zip: Moorpark, CA 93021	Phone: (805) 552-4000
RESPONSIBLE PERSON'S DECLARATION STATEMENT	
I certify the following under penalty of perjury, under the laws of the State of California: 1. I am eligible under Division 3 of the Business and Professions Code to accept responsibility for the building design identified on this Certificate of Compliance. 2. I certify that the energy features and performance specifications identified on this Certificate of Compliance conform to the requirements of Title 24, Part 1 and Part 6 of the California Code of Regulations. 3. The building design features or system design features identified on this Certificate of Compliance are consistent with the information provided on other applicable compliance documents, worksheets, calculations, plans and specifications submitted to the enforcement agency for approval with this building permit application.	
Responsible Designer Name: Shane Judd	Responsible Designer Signature: Shane Judd
Company: All-Trade Engineering	Date Signed: 02/18/2020
Address: 17 E High St.	License: C70991
City/State/Zip: Moorpark, CA 93021	Phone: (805) 552-4000

NOTICE: This certificate has been generated by California Energy Registry, Inc. ("Cal Energy") using information uploaded by third parties not affiliated or related to Cal Energy. Therefore, Cal Energy is not responsible for, and cannot guarantee,

LAUTERBACH & ASSOCIATES
ARCHITECTS INC.
David C. Kesterson, Architect • Ilona Scott, Architect • Mark S. Pettit, Architect
300 MONTGOMERY AVENUE, OXNARD, CALIFORNIA 93036 | 805-988-0912 | FAX 805-981-4510 | www.la-arch.com

REGISTERED PROFESSIONAL ENGINEER SHANE DENNIS JUDD No. M54632 MECHANICAL STATE OF CALIFORNIA

REGISTERED PROFESSIONAL ENGINEER SHANE DENNIS JUDD No. C70991 CIVIL STATE OF CALIFORNIA

ALTHEA COURT APARTMENTS

1357 ALTHEA DRIVE
OXNARD, CA, 93036

CITY OF OXNARD HOUSING AUTHORITY

435 S. D STREET
OXNARD, CALIFORNIA 93030

NO	DESCRIPTION	DATE
1	SUBMIT	02-26-2020

ISSUE

JOB NO. 20-190209

DRAWN BY:
CHECKED BY:
PROJECT MANAGER:
PRINT DATE: 2/15/19 8:36:51 AM

TITLE 24 CALCS

N-1

THESE DRAWINGS AND SPECIFICATIONS ARE THE PROPERTY AND COPYRIGHT OF LAUTERBACH & ASSOCIATES. ALL RIGHTS RESERVED, AND SHALL NOT BE USED ON ANY OTHER WORK OR PROJECT EXCEPT BY WRITTEN AGREEMENT WITH LAUTERBACH & ASSOCIATES. WRITTEN DIMENSIONS SHALL TAKE PRECEDENCE OVER SCALED DIMENSIONS AND SHALL BE VERIFIED ON THE JOB SITE. ANY DISCREPANCY SHALL BE BROUGHT TO THE NOTICE OF LAUTERBACH & ASSOCIATES PRIOR TO COMMENCEMENT OF ANY WORK.

CERTIFICATE OF COMPLIANCE **CF1R-PRF-01E**

Project Name: 2-BR Apartment **Calculation Date/Time:** 2020-02-18T13:29:45-08:00 **(Page 1 of 9)**

Calculation Description: Title 24 Analysis **Input File Name:** 20-012 - ALTHEA APARTMENTS - LAUTERBACH.ribd19x

GENERAL INFORMATION					
01	Project Name	2-BR Apartment			
02	Run Title	Title 24 Analysis			
03	Project Location	1357 Althea Dr.			
04	City	Oxnard	05	Standards Version	2019
06	Zip code	93036	07	Software Version	EnergyPro 8.0
08	Climate Zone	6	09	Front Orientation (deg/ Cardinal)	180
10	Building Type	SingleFamily	11	Number of Dwelling Units	1
12	Project Scope	AdditionAlteration	13	Number of Bedrooms	1
14	New Cond. Floor Area (ft^2)	0	15	Number of Stories	1
16	Existing Cond. Floor Area (ft^2)	1018	17	Fenestration Average U-factor	0.3
18	Total Cond. Floor Area (ft^2)	1018	19	Glazing Percentage (%)	15.23%
20	ADU Bedroom Count	0	21	ADU Conditioned Floor Area	0

COMPLIANCE RESULTS	
01	Building Complies with Computer Performance
02	This building incorporates features that require field testing and/or verification by a certified HERS rater under the supervision of a CEC-approved HERS provider.
03	This building incorporates one or more Special Features shown below

ENERGY USE SUMMARY				
Energy Use (kTDV/ft^2-yr)	Standard Design	Proposed Design	Compliance Margin	Percent Improvement
Space Heating	18.81	15.16	3.65	19.4
Space Cooling	4.52	3.85	0.67	14.8
IAQ Ventilation	0	0	0	
Water Heating	26.04	26.04	0	0
Self Utilization Credit	n/a	0	0	n/a
Compliance Energy Total	**49.37**	**45.05**	**4.32**	**8.8**

Registration Number: 420-P010019272A-000-000-0000000-0000 Registration Date/Time: 02/18/2020 13:52 HERS Provider: Cal Energy

CA Building Energy Efficiency Standards - 2019 Residential Compliance Report Version: 2019.1.100 Schema Version: rev 20190401 Report Generated: 2020-02-18 13:30:06

CERTIFICATE OF COMPLIANCE **CF1R-PRF-01E**

Project Name: 2-BR Apartment **Calculation Date/Time:** 2020-02-18T13:29:45-08:00 **(Page 2 of 9)**

Calculation Description: Title 24 Analysis **Input File Name:** 20-012 - ALTHEA APARTMENTS - LAUTERBACH.ribd19x

REQUIRED SPECIAL FEATURES

The following are features that must be installed as condition for meeting the modeled energy performance for this computer analysis.

- New ductwork added is less than 40 ft. in length
- Non-standard duct location (any location other than attic)

HERS FEATURE SUMMARY

The following is a summary of the features that must be field-verified by a certified HERS Rater as a condition for meeting the modeled energy performance for this computer analysis. Additional detail is provided in the building tables below. Registered CF2Rs and CF3Rs are required to be completed in the HERS Registry

Building-level Verifications:
- Kitchen range hood

Cooling System Verifications:
- Verified EER
- Verified SEER

Heating System Verifications:
- -- None --

HVAC Distribution System Verifications:
- Duct Sealing required if a duct system component, plenum, or air handling unit is altered

Domestic Hot Water System Verifications:
- -- None --

BUILDING - FEATURES INFORMATION

01	02	03	04	05	06	07
Project Name	Conditioned Floor Area (ft^2)	Number of Dwelling Units	Number of Bedrooms	Number of Zones	Number of Ventilation Cooling Systems	Number of Water Heating Systems
2-BR Apartment	1018	1	1	1	0	1

ZONE INFORMATION

01	02	03	04	05	06	07
Zone Name	Zone Type	HVAC System Name	Zone Floor Area (ft^2)	Avg. Ceiling Height	Water Heating System 1	Water Heating System 2
2 Bedroom Apartment	Conditioned	HVAC System1	1018	9	DHW Sys 1	N/A

Registration Number: 420-P010019272A-000-000-0000000-0000 Registration Date/Time: 02/18/2020 13:52 HERS Provider: Cal Energy

CA Building Energy Efficiency Standards - 2019 Residential Compliance Report Version: 2019.1.100 Schema Version: rev 20190401 Report Generated: 2020-02-18 13:30:06

CERTIFICATE OF COMPLIANCE **CF1R-PRF-01E**

Project Name: 2-BR Apartment **Calculation Date/Time:** 2020-02-18T13:29:45-08:00 **(Page 3 of 9)**

Calculation Description: Title 24 Analysis **Input File Name:** 20-012 - ALTHEA APARTMENTS - LAUTERBACH.ribd19x

OPAQUE SURFACES

01	02	03	04	05	06	07	08	09	10	11
Name	Zone	Construction	Azimuth	Orientation	Gross Area (ft^2)	Window and Door Area (ft2)	Tilt (deg)	Status	Verified Existing Condition	Existing Construction
Front Wall	2 Bedroom Apartment	R-15 Wall	180	Front	193.5	0	90	Existing	No	
Left Wall	2 Bedroom Apartment	R-15 Wall	270	Left	171	0	90	Existing	No	
Rear Wall	2 Bedroom Apartment	R-15 Wall	0	Back	193.5	51	90	Existing	No	
Right Wall	2 Bedroom Apartment	R-15 Wall	90	Right	171	20	90	Existing	No	
Front Wall 2	2 Bedroom Apartment	R-15 Wall	180	Front	193.5	48	90	Existing	No	
Left Wall 2	2 Bedroom Apartment	R-15 Wall	270	Left	342	0	90	Existing	No	
Rear Wall 2	2 Bedroom Apartment	R-15 Wall	0	Back	193.5	32	90	Existing	No	
Right Wall 2	2 Bedroom Apartment	R-15 Wall	90	Right	342	24	90	Existing	No	
Roof	2 Bedroom Apartment	R-30 Roof Attic	n/a	n/a	642	n/a	n/a	Existing	No	
Raised Floor	2 Bedroom Apartment	R-19 Floor No Crawlspace	n/a	n/a	1018	n/a	n/a	Existing	No	

ATTIC

01	02	03	04	05	06	07	08	09	10
Name	Construction	Type	Roof Rise (x in 12)	Roof Reflectance	Roof Emittance	Radiant Barrier	Cool Roof	Status	Verified Existing Condition
Attic 2 Bedroom Apartment	Attic Roof2 Bedroom Apartment	Ventilated	0	0.1	0.85	Yes	No	Existing	No

Registration Number: 420-P010019272A-000-000-0000000-0000 Registration Date/Time: 02/18/2020 13:52 HERS Provider: Cal Energy

CA Building Energy Efficiency Standards - 2019 Residential Compliance Report Version: 2019.1.100 Schema Version: rev 20190401 Report Generated: 2020-02-18 13:30:06

CERTIFICATE OF COMPLIANCE **CF1R-PRF-01E**

Project Name: 2-BR Apartment **Calculation Date/Time:** 2020-02-18T13:29:45-08:00 **(Page 4 of 9)**

Calculation Description: Title 24 Analysis **Input File Name:** 20-012 - ALTHEA APARTMENTS - LAUTERBACH.ribd19x

FENESTRATION / GLAZING

01	02	03	04	05	06	07	08	09	10	11	12	13	14	15	16
Name	Type	Surface	Orientation	Azimuth	Width (ft)	Height (ft)	Mult.	Area (ft^2)	U-factor	U-factor Source	SHGC	SHGC Source	Exterior Shading	Status	Verified Existing Condition
Slider	Window	Rear Wall	Back	0			1	51	0.3	NFRC	0.23	NFRC	Bug Screen	Existing	No
Window	Window	Front Wall 2	Front	180			1	16	0.3	NFRC	0.23	NFRC	Bug Screen	New	n/a
Window 2	Window	Front Wall 2	Front	180			1	16	0.3	NFRC	0.23	NFRC	Bug Screen	New	n/a
Window 3	Window	Front Wall 2	Front	180			1	16	0.3	NFRC	0.23	NFRC	Bug Screen	New	n/a
Window 4	Window	Rear Wall 2	Back	0			1	16	0.3	NFRC	0.23	NFRC	Bug Screen	New	n/a
Window 5	Window	Rear Wall 2	Back	0			1	16	0.3	NFRC	0.23	NFRC	Bug Screen	New	n/a
Window 6	Window	Right Wall 2	Right	90			1	24	0.3	NFRC	0.23	NFRC	Bug Screen	New	n/a

OPAQUE DOORS

01	02	03	04	05	06
Name	Side of Building	Area (ft^2)	U-factor	Status	Verified Existing Condition
Door	Right Wall	20	0.2	Existing	No

SLAB FLOORS

01	02	03	04	05		06	07	08	09
Name	Zone	Area (ft2)	Perimeter (ft)	Edge Insul.	R-value and Depth	Carpeted Fraction	Heated	Status	Verified Existing Condition
Slab	2 Bedroom Apartment	1018	91	None		80%	No	Existing	No

Registration Number: 420-P010019272A-000-000-0000000-0000 Registration Date/Time: 02/18/2020 13:52 HERS Provider: Cal Energy

CA Building Energy Efficiency Standards - 2019 Residential Compliance Report Version: 2019.1.100 Schema Version: rev 20190401 Report Generated: 2020-02-18 13:30:06

CERTIFICATE OF COMPLIANCE **CF1R-PRF-01E**

Project Name: 2-BR Apartment **Calculation Date/Time:** 2020-02-18T13:29:45-08:00 **(Page 5 of 9)**

Calculation Description: Title 24 Analysis **Input File Name:** 20-012 - ALTHEA APARTMENTS - LAUTERBACH.ribd19x

OPAQUE SURFACE CONSTRUCTIONS

01	02	03	04	05	06	07	08
Construction Name	Surface Type	Construction Type	Framing	Total Cavity R-value	Interior / Exterior Continuous R-value	U-factor	Assembly Layers
R-15 Wall	Exterior Walls	Wood Framed Wall	2x4 @ 16 in. O. C.	R-15	None / None	0.095	Inside Finish: Gypsum Board Cavity / Frame: R-15 / 2x4 Exterior Finish: 3 Coat Stucco
Attic Roof2 Bedroom Apartment	Attic Roofs	Wood Framed Ceiling	2x4 @ 24 in. O. C.	R-0	None / None	0.644	Roofing: Light Roof (Asphalt Shingle) Roof Deck: Wood Siding/sheathing/decking Cavity / Frame: no insul. / 2x4
R-30 Roof Attic	Ceilings (below attic)	Wood Framed Ceiling	2x4 @ 24 in. O. C.	R-30	None / None	0.032	Over Ceiling Joists: R-20.9 insul. Cavity / Frame: R-9.1 / 2x4 Inside Finish: Gypsum Board
R-19 Floor No Crawlspace	Exterior Floors	Wood Framed Floor	2x10 @ 16 in. O. C.	R-19	None / None	0.047	Floor Surface: Carpeted Floor Deck: Wood Siding/sheathing/decking Cavity / Frame: R-19 / 2x10

BUILDING ENVELOPE - HERS VERIFICATION

01	02	03	04
Quality Insulation Installation (QII)	Quality Installation of Spray Foam Insulation	Building Envelope Air Leakage	CFM50
Not Required	Not Required	Not Required	n/a

Registration Number: 420-P010019272A-000-000-0000000-0000 Registration Date/Time: 02/18/2020 13:52 HERS Provider: Cal Energy

CA Building Energy Efficiency Standards - 2019 Residential Compliance Report Version: 2019.1.100 Schema Version: rev 20190401 Report Generated: 2020-02-18 13:30:06

CERTIFICATE OF COMPLIANCE **CF1R-PRF-01E**

Project Name: 2-BR Apartment **Calculation Date/Time:** 2020-02-18T13:29:45-08:00 **(Page 6 of 9)**

Calculation Description: Title 24 Analysis **Input File Name:** 20-012 - ALTHEA APARTMENTS - LAUTERBACH.ribd19x

WATER HEATING SYSTEMS

01	02	03	04	05	06	07	08	09	10
Name	System Type	Distribution Type	Water Heater Name (#)	Solar Fraction (%)	Compact Distribution	HERS Verification	Status	Verified Existing Condition	Existing Water Heating System
DHW Sys 1	Domestic Hot Water (DHW)	Standard Distribution System	DHW Heater 1 (1)	0	None	n/a	Existing	No	

WATER HEATING - HERS VERIFICATION

01	02	03	04	05	06	07	08
Name	Pipe Insulation	Parallel Piping	Compact Distribution	Compact Distribution Type	Recirculation Control	Central DHW Distribution	Shower Drain Water Heat Recovery
DHW Sys 1 - 1/1	Not Required	Not Required	Not Required	None	Not Required	Not Required	Not Required

SPACE CONDITIONING SYSTEMS

01	02	03	04	05	06	07	08	09	10	11	12
Name	System Type	Heating Unit Name	Cooling Unit Name	Fan Name	Distribution Name	Required Thermostat Type	Heating Equipment Count	Cooling Equipment Count	Status	Verified Existing Condition	Existing HVAC System
HVAC System1	Heating and cooling system other	Heating Component 1	Cooling Component 1	HVAC Fan 1	Air Distribution System 1	Setback	1	1	New	No	n/a

HVAC - HEATING UNIT TYPES

01	02	03	04	05
Name	System Type	Number of Units	Heating Efficiency Type	Efficiency
Heating Component 1	Gas wall furnace	1	AFUE	96.2

Registration Number: 420-P010019272A-000-000-0000000-0000 Registration Date/Time: 02/18/2020 13:52 HERS Provider: Cal Energy

CA Building Energy Efficiency Standards - 2019 Residential Compliance Report Version: 2019.1.100 Schema Version: rev 20190401 Report Generated: 2020-02-18 13:30:06

CERTIFICATE OF COMPLIANCE **CF1R-PRF-01E**

Project Name: 2-BR Apartment **Calculation Date/Time:** 2020-02-18T13:29:45-08:00 **(Page 7 of 9)**

Calculation Description: Title 24 Analysis **Input File Name:** 20-012 - ALTHEA APARTMENTS - LAUTERBACH.ribd19x

HVAC - COOLING UNIT TYPES

01	02	03	04	05	06	07	08
Name	System Type	Number of Units	Efficiency EER	Efficiency SEER	Zonally Controlled	Multi-speed Compressor	HERS Verification
Cooling Component 1	Central split AC	1	12.5	15	Not Zonal	Single Speed	Cooling Component 1-hers-cool

HVAC COOLING - HERS VERIFICATION

01	02	03	04	05	06
Name	Verified Airflow	Airflow Target	Verified EER	Verified SEER	Verified Refrigerant Charge
Cooling Component 1-hers-cool	Not Required	0	Required	Required	Not Required

HVAC - DISTRIBUTION SYSTEMS

01	02	03	04	05	06	07	08	09	10	11	12	13	14	15	16
			Duct Ins. R-value		Duct Location		Surface Area								
Name	Type	Design Type	Supply	Return	Supply	Return	Supply	Return	Bypass Duct	Duct Leakage	HERS Verification	Status	Verified Existing Condition	Existing Distribution system	New Ducts 40 ft
Air Distribution System 1	Conditioned space-entirely	Non-Verified	R-6	R-6	Conditioned Zone	Conditioned Zone	n/a	n/a	No Bypass Duct	Existing (not specified)	Air-Distribution System 1-hers-dist	Existing + New	No	n/a	n/a

HVAC - FAN SYSTEMS

01	02	03	04
Name	Type	Fan Power (Watts/CFM)	Name
HVAC Fan 1	HVAC Fan	0.58	HVAC Fan 1-hers-fan

Registration Number: 420-P010019272A-000-000-0000000-0000 Registration Date/Time: 02/18/2020 13:52 HERS Provider: Cal Energy

CA Building Energy Efficiency Standards - 2019 Residential Compliance Report Version: 2019.1.100 Schema Version: rev 20190401 Report Generated: 2020-02-18 13:30:06

CERTIFICATE OF COMPLIANCE **CF1R-PRF-01E**

Project Name: 2-BR Apartment **Calculation Date/Time:** 2020-02-18T13:29:45-08:00 **(Page 8 of 9)**

Calculation Description: Title 24 Analysis **Input File Name:** 20-012 - ALTHEA APARTMENTS - LAUTERBACH.ribd19x

HVAC FAN SYSTEMS - HERS VERIFICATION

01	02	03
Name	Verified Fan Watt Draw	Required Fan Efficiency (Watts/CFM)
HVAC Fan 1-hers-fan	Not Required	0

Registration Number: 420-P010019272A-000-000-0000000-0000 Registration Date/Time: 02/18/2020 13:52 HERS Provider: Cal Energy

CA Building Energy Efficiency Standards - 2019 Residential Compliance Report Version: 2019.1.100 Schema Version: rev 20190401 Report Generated: 2020-02-18 13:30:06

CERTIFICATE OF COMPLIANCE **CF1R-PRF-01E**

Project Name: 2-BR Apartment **Calculation Date/Time:** 2020-02-18T13:29:45-08:00 **(Page 9 of 9)**

Calculation Description: Title 24 Analysis **Input File Name:** 20-012 - ALTHEA APARTMENTS - LAUTERBACH.ribd19x

DOCUMENTATION AUTHOR'S DECLARATION STATEMENT

I, I certify that this Certificate of Compliance documentation is accurate and complete.

Documentation Author Name: Shane Judd	Documentation Author Signature: Shane Judd
Company: All-Trade Engineering	Signature Date: 02/18/2020
Address: 17 E High St.	CEA/ HERS Certification Identification (if applicable):
City/State/Zip: Moorpark, CA 93021	Phone: (805) 552-4000

RESPONSIBLE PERSON'S DECLARATION STATEMENT

I certify the following under penalty of perjury, under the laws of the State of California:

1. I am eligible under Division 3 of the Business and Professions Code to accept responsibility for the building design identified on this Certificate of Compliance.
2. I certify that the energy features and performance specifications identified on this Certificate of Compliance conform to the requirements of Title 24, Part 1 and Part 6 of the California Code of Regulations.
3. The building design features or system design features identified on this Certificate of Compliance are consistent with the information provided on other applicable compliance documents, worksheets, calculations, plans and specifications submitted to the enforcement agency for approval with this building permit application.

Responsible Designer Name: Shane Judd	Responsible Designer Signature: Shane Judd
Company: All-Trade Engineering	Date Signed: 02/18/2020
Address: 17 E High St.	License: C70991
City/State/Zip: Moorpark, CA 93021	Phone: (805) 552-4000

NOTICE: This certificate has been generated by California Energy Registry, Inc. ("Cal Energy") using information uploaded by third parties not affiliated or related to Cal Energy. Therefore, Cal Energy is not responsible for, and cannot guarantee,

Registration Number: 420-P010019272A-000-000-0000000-0000 Registration Date/Time: 02/18/2020 13:52 HERS Provider: Cal Energy

CA Building Energy Efficiency Standards - 2019 Residential Compliance Report Version: 2019.1.100 Schema Version: rev 20190401 Report Generated: 2020-02-18 13:30:06

THESE DRAWINGS AND SPECIFICATIONS ARE THE PROPERTY AND COPYRIGHT OF LAUTERBACH & ASSOCIATES. ALL RIGHTS RESERVED, AND SHALL NOT BE USED ON ANY OTHER WORK OR PROJECT EXCEPT BY WRITTEN AGREEMENT WITH LAUTERBACH & ASSOCIATES. WRITTEN DIMENSIONS SHALL TAKE PRECEDENCE OVER SCALED DIMENSIONS AND SHALL BE VERIFIED ON THE JOB SITE. ANY DISCREPANCY SHALL BE BROUGHT TO THE NOTICE OF LAUTERBACH & ASSOCIATES PRIOR TO COMMENCEMENT OF ANY WORK.

LAUTERBACH & ASSOCIATES
ARCHITECTS INC.
David C. Kesterson, Architect • Ilona Scott, Architect • Mark S. Pettit, Architect
300 MONTGOMERY AVENUE, OXNARD, CALIFORNIA 93036 | 805-988-0912 | FAX 805-981-4510 | www.la-arch.com

REGISTERED PROFESSIONAL ENGINEER SHANE DENNIS JUDD No. M24632 MECHANICAL STATE OF CALIFORNIA

REGISTERED PROFESSIONAL ENGINEER SHANE DENNIS JUDD No. C70991 CIVIL STATE OF CALIFORNIA

ALTHEA COURT APARTMENTS

1357 ALTHEA DRIVE
OXNARD, CA, 93036

CITY OF OXNARD HOUSING AUTHORITY

435 S. D STREET
OXNARD, CALIFORNIA 93030

NO.	DESCRIPTION	DATE
1	SUBMIT	02-26-2020

ISSUE

JOB NO. 20-190209

DRAWN BY:
CHECKED BY:
PROJECT MANAGER:
PRINT DATE: 2/15/19 8:36:51 AM

TITLE 24 CALCS

N-2

These drawings are the instruments of service and are the property of ALL-TRADE ENGINEERING. All designs and other information contained on these drawings are for use on the specified project and shall not be used on other projects, or for additions to this project, or for completion of this project by others without first obtaining the expressed written permission and consent of ALL-TRADE ENGINEERING. These drawings shall not be reproduced, changed or copied in any form or manner whatsoever nor are they to be assigned to any third party without said written permission and consent. All designs and information contained in these drawings are based on information provided by the client. ALL-TRADE ENGINEERING has relied solely on said client information in the preparation of the designs and other information contained on these drawings. ALL-TRADE ENGINEERING assumes no responsibility for any work performed based on said information. The designs and other information contained on these drawings may be subject to modifications as required by additional information including, but not limited to, final boundary survey, survey of as-built conditions, government agency input, program modifications, etc. These plans are only valid for six months from the plot date due to Code changes, industry standards, and site conditions.

PLUMBING NOTES

1. All work shall be in accordance and comply with the latest applicable city ordinance and the 2019 CPC.

2. It is the intent of these drawings that this be a complete plumbing installation. Any apparent errors shall be brought to the attention of the designer and/or tenant prior to proceeding.

3.. Contractor shall verify all existing conditions versus new installations to assure proper new installations can be completed properly prior to proceeding.

4. These plans shall be used only after approvals and permits have been secured by the proper jurisdiction of the department of building and safety.

5. All drawings and details are provided as a diagrammatic version of the proposed work. The contractor shall be held liable and responsible for all field verifications of equipment, materials, and installations.

6. Contractor shall verify all equipment is installed in accordance with manufacturer's recommendations and local code requirements prior to any installations.

7. Provide a reduced pressure backflow preventer for all soda lines.

8. Provide a backflow protection device for any equipment directly connected the water supply such as ice makers and coffee machines.

9. Penetrations of fire-resistive walls, floor-ceilings and roof ceilings shall be protected as required in CBC Section 713.

10. Exhaust outlets and plumbing vents shall terminate not less than 10' from or at least 3' above any openable window, door opening, air intake, vent shaft, adjacent building, and property line.

11. Overflow drains having the same size as roof drains and on independent drain lines are required. In lieu of this, overflow scuppers, 4" minimum high with a width equal to the circumference of the roof drain may be provided. Overflow system shall have inlets located two inches above the roof low points. [§ 1101.11 CPC].

12. All floor drains and floor sinks shall be installed with trap primers as required by code and jurisdictional requirements whether indicated on drawings or not.

13. All fixtures shall be provided as water saving devices per the following minimum requirements:
Water Closet: 1.28 gpf Urinal: 0.5 gpf Lavatory Faucet: 0.5 gpm Sink Faucet: 2.2 gpm Showerhead: 2.0 gpm

14. Waste and vent piping shall slope a minimum of 2%. Domestic piping shall slope towards its origin min 2%.

15. Pipes shall not come in direct contact with hangers. Furnish and install isolators at each pipe hanger and pipe support for cold water piping.

16. Insulation around hot water piping shall enter through hangers. Install approved insulation protection shield at each such penetration.

17. Valves shall be bronze body two piece ball valves rated to 600 psi working pressure full port with adjustable packing gland. Extend lever handle for hot water piping. Solder or thread ends as required.

18. Install above ground cleanouts at each change in direction of piping greater than 45 degrees, at minimum of 50' for piping 4" and smaller and 100' for larger piping. Cleanouts shall be full size of pipe unless otherwise indicated on the drawings: extended to surface of wall or floor with 45 degree fitting and closed with bronze flush, countersunk plugs. Install floor and wall cleanout covers for concealed piping.

19. Install flashing sleeves on stacks passing through the roof. Secure over stack flashing in accordance with manufacturer's instructions. Vent stacks and service lines through roof and decks shall be flashed with 4 lb. or heavier sheet lead, in one piece 10" skirt, 5" boot, with suitable counter-flashing assembly.

20. Connections between dissimilar metals shall be installed by means of an approved di-electric fitting.

21. Completely cover the pipe openings for all piping passing through walls, floor and ceiling with chrome plated, stamped steel, hinged, split ring escutcheons with set screw. Piping penetrating rated wall or floor construction shall be set in UL fire rated sleeve/coupling penetrators.

22. Materials: Sanitary drainage, vent, and storm water piping above grade shall be standard weight cast iron soil pipe and fittings with stainless steel couplings with neoprene gaskets. Sanitary drainage below grade to 5' outside of building shall be schedule 40 ABS or standard weight cast iron soil pipe fittings with extra heavy cast iron couplings with neoprene gaskets. Yard piping beyond 5' outside of building shall be either vitrified clay, cast iron, schedule 40 ABS or PVC as required by local authorities. Storm drainage piping below grade shall be standard weight cast iron soil pipe and fittings with extra heavy cast iron couplings with neoprene gaskets. Rectangular piping shall be Alhambra Foundry cast iron pipe and adapters. A470 series pipe with A480 series adapters.

Water system above ground piping shall be Type 'L' copper tubing with wrought copper fittings with 95-5 soldered joints. Water system piping below grade shall be Type 'K' copper with sweated connections. Piping shall be laid in a bed of sand and shall be coated or wrapped in an approved manner.

Condensate piping shall be Type 'L' copper with wrought copper fittings with 95-5 (Tin Antimony) soldered joints.

Gas piping shall be schedule 40 black steel with extra heavy malleable iron screwed fittings. Gas piping which is exposed to weather shall be schedule 40 galvanized steel with extra heavy galvanized malleable iron fittings. Buried piping shall be factory wrapped or coated in an approved manner.

Hangers and supports:	Max. Horiz. Spacing	Max Vert. Spacing	Min. Rod Size
Cast Iron Pipe	5 ft.	15 ft.	3/8"
Cu. Tubing 1.5" and smaller	6 ft.	10 ft.	3/8"
Cu. Tubing 2" and larger	10 ft.	10 ft.	3/8"

23. Supports and hangers are to be provided to properly support, secure and align piping and to meet conditions. Provide seismic bracing for hangers and supports supporting piping. Comply with the latest edition of the Sheet Metal and Air Conditioning Contractors National Association Inc. Seismic Restraint Manual as approved by ANSI.

24. Provide and install a 1" high manufactured plastic valve tag at each valve, cock, and control device in the plumbing system. Each tag shall be individually numbered, and shall identify the system being served, I.E. CW = Cold Water, HW = Hot Water, G = Gas. Fasten each tag with a standard solid brass chain.

25. Provide and install a water hammer arrestor on each branch serving plumbing equipment with quick closing, self-closing or solenoid valves. Arrestors shall be sized and located in accordance with the manufacturer's recommendations and shall be fabricated of Type 'K' copper. A piston shall provide permanent mechanical barrier between fluid and pre-load air charge. The arrestor shall be FDA approved for use in potable water systems and shall be fully guaranteed for the life of the system.

26. Where metallic pipelines penetrate concrete structures such as building floors or walls, use plastic sleeves, rubber seals, or approved dielectric material to prevent pipe contact with the concrete and reinforcing steel. On all pipe, coat bare steel appurtenances such as bolts, joint hardnesses, or flexible couplings with coal tar or elastomeric based mastic, coal tar epoxy, moldable sealant, wax tape or approved equivalent.

27. Piping shall not come in direct contact with structure. Isolate piping by means of resilient sleeves, mounts, or minimum ¼" approved resilient material.

28. Earthquake actuated automatic gas shutoff valve shall be installed and conform with the appropriate California and ANSI standards as well as all authorities having jurisdiction.

29. Provide an approved type pressure regulator set at 80 psi when local water pressure is in excess of 80 psi. CPC, Sec. 608.2

30. Water closet bowls used for public use shall be elongated in design and equipped with an open front seat. CPC, Sec. 408.1.

31. Controls for an accessible water closet shall be operable with one hand and shall not require tight grasping, pinching or twisting. Controls shall be mounted on the wide side of the toilet compartment space no more than 44 inches above the floor. CBC, Sec. 1115B.4.5

32. In seismic design categories C, D, E & F water heaters shall be strapped within the upper 1/3 and lower 1/3 of its vertical dimension. The lower strap shall be a minimum of 4 inches above the controls. CPC, Sec. 508.2.

33. WATER SUPPLY TESTING PARAMETERS – Upon completion of a section or of the entire hot and cold water supply system, it shall be tested and proved tight under a water pressure not less than 100 psi. The water used for tests shall be obtained from a potable source of supply. The piping shall withstand the test without leaking for a period of not less than 15 minutes.

34. WASTE LINE TESTING PARAMETERS – The piping of the plumbing, drainage, and venting systems shall be tested with water. The water test shall be applied to the drainage and vent systems either in its entirety or in sections. All openings in the piping shall be tightly closed, except the highest opening, and the system filled with water to point of overflow. No section shall be tested with less than 10 ft. head of water. The water shall be kept in the system, or in the portion under test, for at least fifteen minutes before inspection starts.

35. GAS LINE TESTING PARAMETERS – The piping of the gas system shall be tested to 1.5 times the maximum working pressure per CMC 1316.3 or CPC 1214.3. Required pressure tests of ten psi or less shall be performed with gauges of one-tenth of a pound incrementation or less. CPC 319.1.

36. Approved metallic water line connectors shall be used from shutoffs to plumbing fixtures. Rubber and plastics shall not be used.

37. All electrical, mechanical, and plumbing fixtures shall be elevated at least to the lowest finished floor of the habitable and non-habitable area.

TABLE 610.4
FIXTURE UNIT TABLE FOR DETERMINING WATER PIPE AND METER SIZES

METER AND STREET SERVICE (inches)	BUILDING SUPPLY AND BRANCHES (inches)	MAXIMUM ALLOWABLE LENGTH (feet)														
		40	60	80	100	150	200	250	300	400	500	600	700	800	900	1000
PRESSURE RANGE – 46 to 60 psi[1]																
¾	½[2]	7	7	6	5	4	3	2	2	1	1	1	0	0	0	0
¾	¾	20	20	19	17	14	11	9	8	6	5	4	4	3	3	3
¾	1	39	39	36	33	28	23	21	19	17	14	12	10	9	8	8
1	1	39	39	39	36	30	25	23	20	18	15	12	10	9	8	8
¾	1¼	39	39	39	39	39	39	34	32	27	25	22	19	19	17	16
1	1¼	78	78	76	67	52	44	39	36	30	27	24	20	19	17	16
1½	1¼	78	78	78	78	66	52	44	39	33	29	24	20	19	17	16
1	1½	85	85	85	85	85	85	80	67	55	49	41	37	34	32	30
1½	1½	151	151	151	151	128	105	90	78	62	52	42	38	35	32	30
2	1½	151	151	151	151	150	117	98	84	67	55	42	38	35	32	30
1	2	85	85	85	85	85	85	85	85	85	85	85	85	85	83	80
1½	2	370	370	340	318	272	240	220	198	170	150	135	123	110	102	94
2	2	370	370	370	370	368	318	280	250	205	165	142	123	110	102	94
2	2½	654	640	610	580	535	500	470	440	400	365	335	315	285	267	250

PIPE SIZING per FIXTURE UNIT LOAD

	CW FT	HW FT
1/2"	4	1
3/4"	14	6
1"	30	15
1-1/4"	52	28
1-1/2"	85	48
2"	187	120

HW 5 FPS MAX
CW 8 FPS MAX

GAS SIZING TABLE
TDL=100'

	CFH	MBH
1/2"	50	55
3/4"	104	114
1"	195	214
1-1/4"	400	440
1-1/2"	600	660
2"	1160	1216

FLUID TEMPERATURE RANGE (°F)	CONDUCTIVITY RANGE (in Btu-inch per hour per square foot per °F)	INSULATION MEAN RATING TEMPERATURE (°F)	NOMINAL PIPE DIAMETER (in inches)				
			< 1	1 to <1.5	1.5 to < 4	4 to < 8	8 and larger
			INSULATION THICKNESS REQUIRED (in inches)				
Above 350	0.32-0.34	250	4.5	5.0	5.0	5.0	5.0
251-350	0.29-0.32	200	3.0	4.0	4.5	4.5	4.5
201-250	0.27-0.30	150	2.5	2.5	2.5	3.0	3.0
141-200	0.25-0.29	125	1.5	1.5	2.0	2.0	2.0
105-140	0.22-0.28	100	1.0	1.5	1.5	1.5	1.5

*** NOTE ***
CONTRACTOR TO VERIFY EXACT SIZE, SLOPE AND LOCATION OF ALL EXISTING UTILITIES ON-SITE PRIOR TO CONSTRUCTION

PLUMBING LEGEND

Symbol	Description
— — # — —	VENT LINE & SIZE
#	WASTE LINE & SIZE (BUILDING SEWER SHALL BE LAID IN A FIRM BED OF SAND)
GW # GW	GREASE WASTE LINE & SIZE (BUILDING SEWER SHALL BE LAID IN A FIRM BED OF SAND)
#(#)	HOT WATER SUPPLY LINE SIZE(WSFU)
— — #(#) — —	COLD WATER SUPPLY LINE SIZE (WSFU)
FCW #(#) FCW	FILTERED COLD WATER SUPPLY LINE SIZE (WSFU)
G #(#) G	GAS PIPING SIZE (MBH)
	VENT LINE BELOW FLOOR
	HOT WATER SUPPLY LINE BELOW SLAB
	COLD WATER SUPPLY LINE BELOW SLAB
	CLEANOUT
	DWV, HW, CW RISER
	SHUT-OFF VALVE
	POINT OF CONNECTION (VIF)
(VIF)	VERIFY IN FIELD

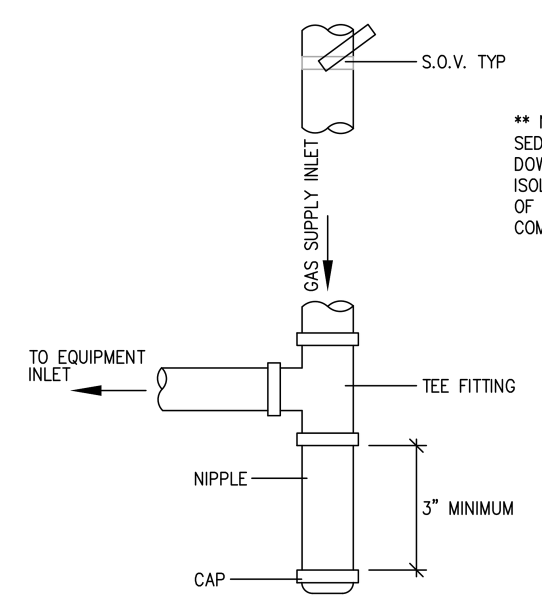

** NOTE **
SEDIMENT TRAP SHALL BE INSTALLED DOWNSTREAM OF THE EQUIPMENT ISOLATION VALVE AND UPSTREAM OF ALL OTHER FUEL GAS SYSTEM COMPONENTS.

NO SCALE | GAS PIPING - SEDIMENT TRAP | 1 / P-0

VENT ALL ISLAND FIXTURES IN STRICT ACCORDANCE WITH SECT. #909.0 OF 2019 C.P.C.

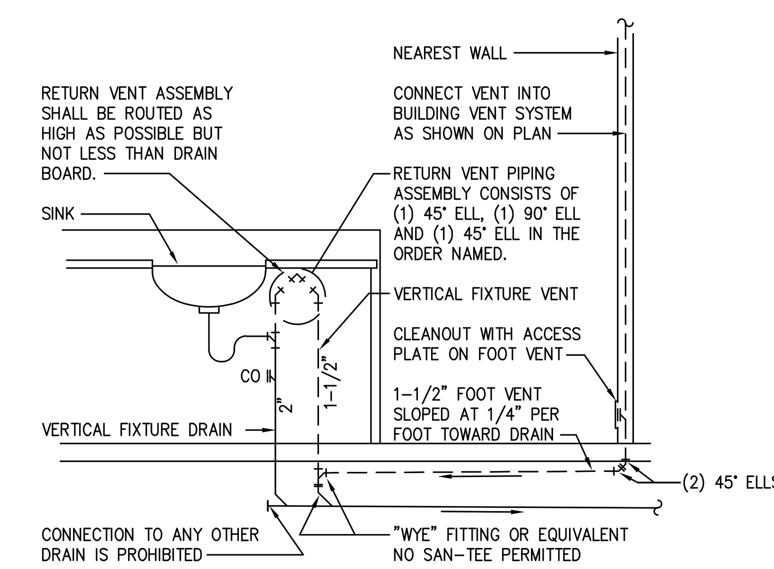

NO SCALE | ISLAND SINK WASTE / VENT PIPING | 2 / P-0

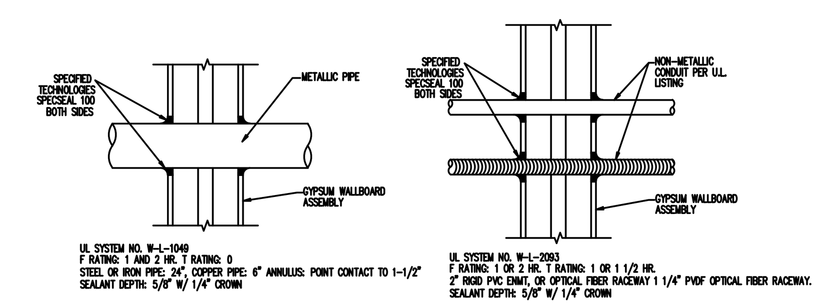

NOTE:
INSTALL ALL MANUF. PRODUCTS IN ACCORDANCE W/ THEIR LISTED AND APPROVED TESTED ASSEMBLIES. TESTED ASSEMBLIES HAVE PRIORITY O/ ANY INFORMATION SHOWN OR NOTED HEREWITH

THIS IS AN ABBREVIATED DESCRIPTION OF THE INSTALLATION. SEE SPECIFICATIONS OR OBTAIN U.L. LISTED ASSEMBLIES INSTALLATION REQUIREMENTS FOR COMPLETE DESCRIPTION OF INSTALLATION & INSTALL ACCORDINGLY.

PARTIAL PENETRATIONS SHALL BE SEALED IN THE SAME FASHION AT EACH PENETRATION POINT.

RATED PENETRATIONS (TYP)

NO SCALE | RATED PENETRATIONS | 2 / P-3

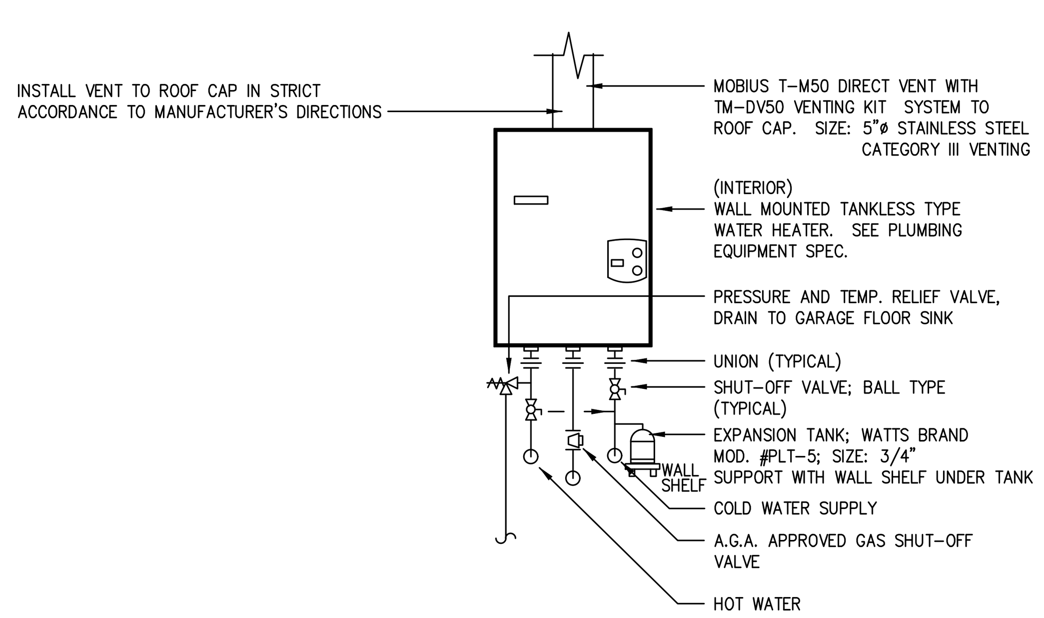

NO SCALE | TANKLESS WATER HEATER (INDOOR) | 3 / P-0

Plumbing Equipment Specification

WATER HEATER TANKLESS — BRAND: NORITZ — MOD. #: — GAS INPUT: 100,000 BTUH

REMARK: WALL MOUNTED ON EXTERIOR WALL AS SHOWN ON PLAN. PROVIDE WITH TEMPERATURE REMOTE CONTROLLER. CONSULT OWNER'S REPRESENTATIVE FOR EXACT LOCATION OF REMOTE CONTROLLER(S). SET DIP SWITCH ON CONTROL BOARD TO A MAX. 120° F.

PLUMBING FIXTURE SCHEDULE

CALL OUT	FIXTURE TYPE	GENERAL SPEC., MAKE & MODEL	LOCATION	CW BRANCH SIZE	HW BRANCH SIZE	W BRANCH SIZE	V BRANCH SIZE	REMARKS
WC	WATER CLOSET	FLOOR MOUNTED 1.28 GPF TANK TYPE AMERICAN STANDARD ACCESS PRO 215AG	RESTROOMS	3/4"	--	3"	2"	PROVIDE W/ELONGATED OPEN FACE SEAT LESS COVER
LAV	LAVATORY	WALL MOUNTED FIXTURE W/4"o.c. SINGLE LEVER FAUCET. FAUCET SHALL BE A SYMMONS "SUMMETRIX" MOD. #S-20-G-H OR EQUAL W/MAX. OUTLET TEMP. LIMIT STOP.	RESTROOMS	1/2"	1/2"	2"	1-1/2"	FAUCET SHALL HAVE A MAX. FLOW OF 1.2 GPM AND THE ABILITY TO LIMIT THE OUTLET WATER TEMPERATURE TO A MAX. TEMP. OF 110°F. SET ALL FAUCET AT MAX. 110°F TEMP WITH DEVICE PER ASSE 1070.
KS	KITCHEN SINK	AMERICAN STANDARD 24DB.332284.290 W/ DELTA 100LF-WF FAUCET	KITCHEN	3/4"	3/4"	2"	2"	FAUCET SHALL HAVE A MAX. FLOW OF 1.8 GPM AND THE ABILITY TO LIMIT THE OUTLET WATER TEMPERATURE TO A MAX. TEMP. OF 110°F. SET ALL FAUCET AT MAX. 110°F TEMP WITH DEVICE PER ASSE 1070.
SH	SHOWER	SHOWER FIXTURE: SYMMONS ORIGINS 9604-PLR	RESTROOMS	3/4"	3/4"	2"	2"	MIXING VALVE SHALL HAVE A MAX. FLOW OF 1.8 GPM AND THE ABILITY TO LIMIT THE OUTLET WATER TEMPERATURE TO A MAX. TEMP. OF 110°F. SET ALL FAUCET AT MAX. 110°F TEMP WITH DEVICE PER ASSE 1070.

REVISIONS

AVP
2/12/20

JOB NAME
PROPOSED WORK FOR:
1357 ALTHEA DR.
OXNARD, CA. 93036

DRAWINGS VALID ONLY WITH ENGINEER'S WET SIGNATURE OVER SEAL ON EACH SHEET IN INK

ALL-TRADE
Engineering & Design
17 EAST HIGH STREET
MOORPARK, CA
T:805-552-4000
F:805-380-4551
JUDDSALLTRADE@YAHOO.COM
www.AllTradeEngineering.com

SHEET TITLE
PLUMBING NOTES & DETAILS

REGISTERED PROFESSIONAL ENGINEER — SHANE DENNIS JUDD — No. C78991 — Exp. 06-30-21 — CIVIL — STATE OF CALIFORNIA

REGISTERED PROFESSIONAL ENGINEER — SHANE DENNIS JUDD — No. M37632 — Exp. 12-31-21 — MECHANICAL — STATE OF CALIFORNIA

P-0.0

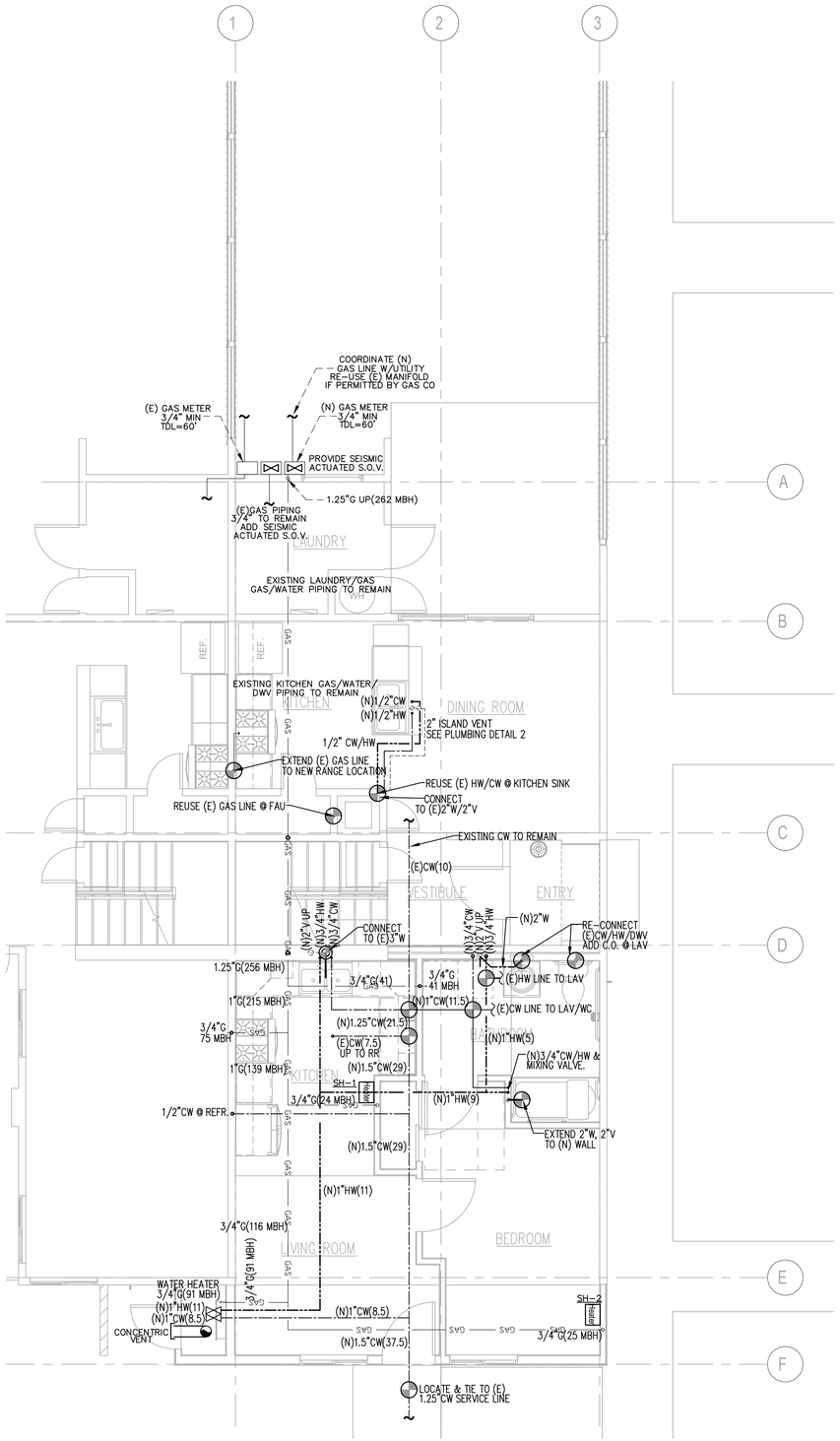

FIRST FLOOR PLUMBING PLAN

SCALE: 1/4":12"

*** NOTE ***
CONTRACTOR TO VERIFY EXACT SIZE, SLOPE AND LOCATION OF ALL EXISTING UTILITIES ON-SITE PRIOR TO CONSTRUCTION

PLUMBING LEGEND

#/#	VENT LINE & SIZE
#	WASTE LINE & SIZE (BUILDING SEWER SHALL BE LAID IN A FIRM BED OF SAND)
GW #/# GW	GREASE WASTE LINE & SIZE (BUILDING SEWER SHALL BE LAID IN A FIRM BED OF SAND)
#(#)	HOT WATER SUPPLY LINE SIZE(WSFU)
#(#)	COLD WATER SUPPLY LINE SIZE (WSFU)
FCW #(#) FCW	FILTERED COLD WATER SUPPLY LINE SIZE (WSFU)
G #(#) G	GAS PIPING SIZE (MBH)
	VENT LINE BELOW FLOOR
	HOT WATER SUPPLY LINE BELOW SLAB
	COLD WATER SUPPLY LINE BELOW SLAB
	CLEANOUT
	DWV, HW, CW RISER
	SHUT-OFF VALVE
	POINT OF CONNECTION (VIF)
(VIF)	VERIFY IN FIELD

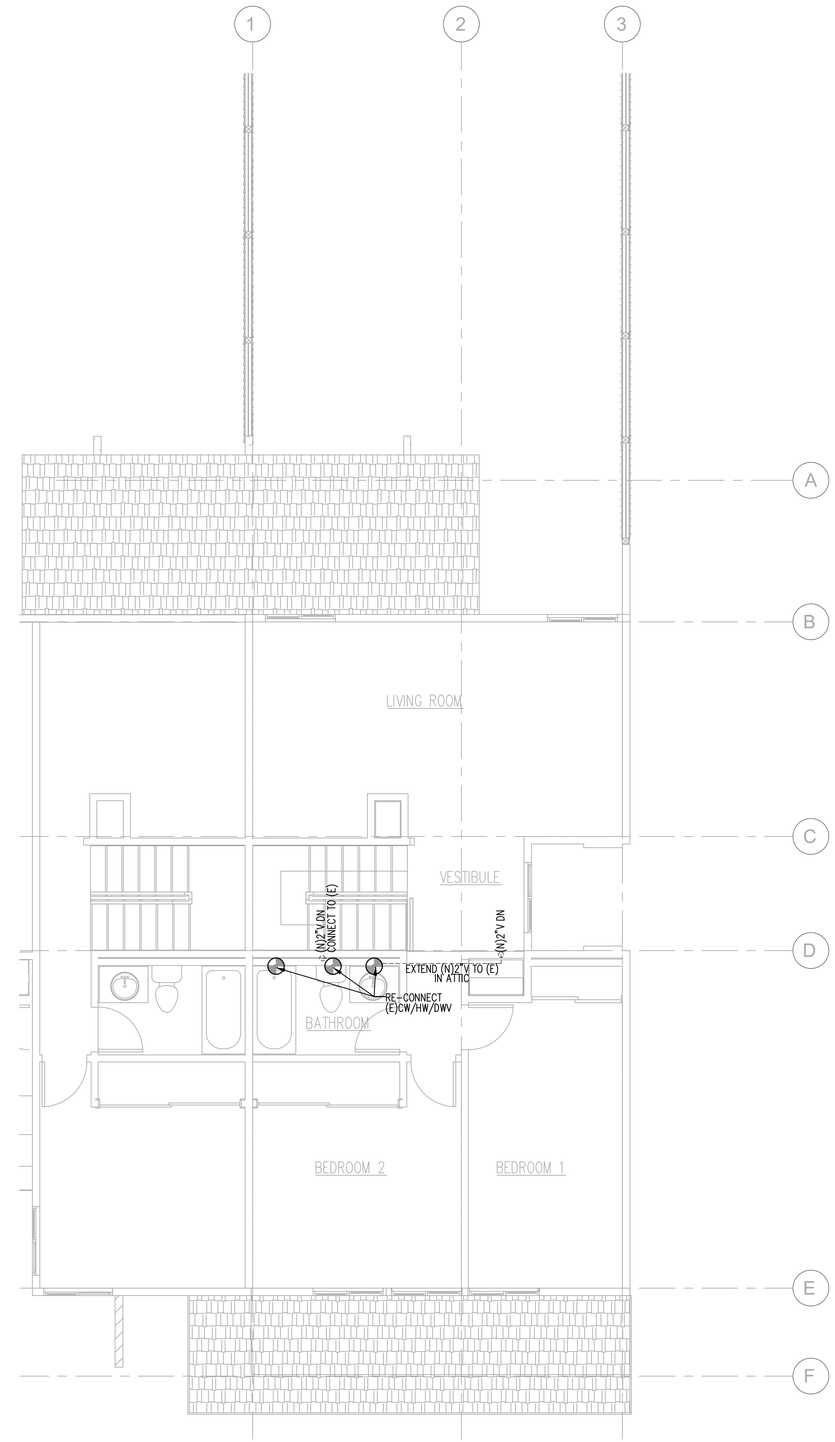

SECOND FLOOR PLUMBING PLAN

SCALE: 1/4":12"

These drawings are, as instruments of service, at all times the property of ALL-TRADE ENGINEERING, and may not be used on any other project without the express written permission of ALL-TRADE ENGINEERING. Contractor to verify all dimensions, conditions and specifications prior to commencement of work. Do not scale drawings. Contractor to report any discrepancies found on these drawings to the designer. ALL-TRADE ENGINEERING assumes no responsibility for any work performed based on field changes, the design and other information contained on these drawings may be subject to copyright protection under the laws of the United States of America.

REVISIONS

AVP 2/12/20

JOB NAME

PROPOSED WORK FOR:
1357 ALTHEA DR.
OXNARD, CA. 93036

DRAWINGS VALID ONLY WITH ENGINEER'S WET SIGNATURE OVER SEAL ON EACH SHEET IN INK

ALL-TRADE
Engineering & Design
17 EASTHAMPTON STREET
WOODPARK, CA
T:(805)-565-4000
F:(805)-565-4551
JUDYCHALTRADE@YAHOO.COM
WWW.ALLTRADEENGINEERING.COM

SHEET TITLE

PLUMBING PLAN

REGISTERED PROFESSIONAL ENGINEER SHANE DENNIS BAKER No. E-28991 Exp. 12-30-21 CIVIL STATE OF CALIFORNIA

REGISTERED PROFESSIONAL ENGINEER SHANE DENNIS BAKER No. M34642 Exp. 12-31-21 MECHANICAL STATE OF CALIFORNIA

P-1.0

LED FIXTURE SCHEDULE

TYPE	MANUFACTURER AND CATALOG NUMBER	LED MODULE TYPE	LED MODULE COLOR TEMP	LED MODULE WATTS	DRIVER	OPTIC/LENS	REMARKS
A / 20	JUNO JSF 13IN 18LM 30K 90CRI 120FRPC WH		3000K		FRPC	DIFFUSE	SLIM S/M 13"
B / 10	JUNO JSF 5IN 07LM 30K 90CRI 120FRPC WH		3000K		FRPC	DIFFUSE	SLIM S/M 5"
C / 24	TECH 700 BC BAS 24S - LED 927		2700K	24	ELECTRONIC	DIFFUSE	VANITY LIGHT

(N) PANEL SCHEDULE "A"

SERVICE: 120/240V 1Φ 3W | MAIN BKR.: MLO | BUS: 100A | LOC.: SEE PLAN
SQUARE D QO LOAD CENTER | MTG.: FLUSH

REMARKS	LOAD ΦA	LOAD ΦB	REC	LTG	MISC	POLE	TRIP	CIRC		CIRC	TRIP	POLE	REC	LTG	MISC	LOAD ΦA	LOAD ΦB	REMARKS
LAUNDRY CIRCUIT	1500		2			1	20	1	*	2	20	1						GEN LTG
SMOKE DETECTORS		100			3			3		4		1						
BATHROOM CIRCUIT	500		1	1	1			5		6		1						
REFRIGERATOR		800	1					7	*	8	15	1			1			FAU
BATHROOM CIRCUIT	500		1	1	1			9		10	15	1			1			FAU
SPARE								11		12	20	1						SPARE
SMALL APPLIANCE CKT	1500							13		14								
"		1500						15		16								
EXT REC	500		1					17		18								
WH IGNITION		100			1			19		20								
SPARE								21		22								
"								23		24								

TOTAL WATTS= | ΦA= | ΦB=
AMPS= SEE ELECTRICAL LOAD CALCULATIONS | MINIMUM BKR | A.I.C. RATING= 10,000 AMPS SYM

* AFCI / GFCI COMBINATION CIRCUIT BREAKER

ALL CIRCUIT BREAKERS SHALL BE AFCI.

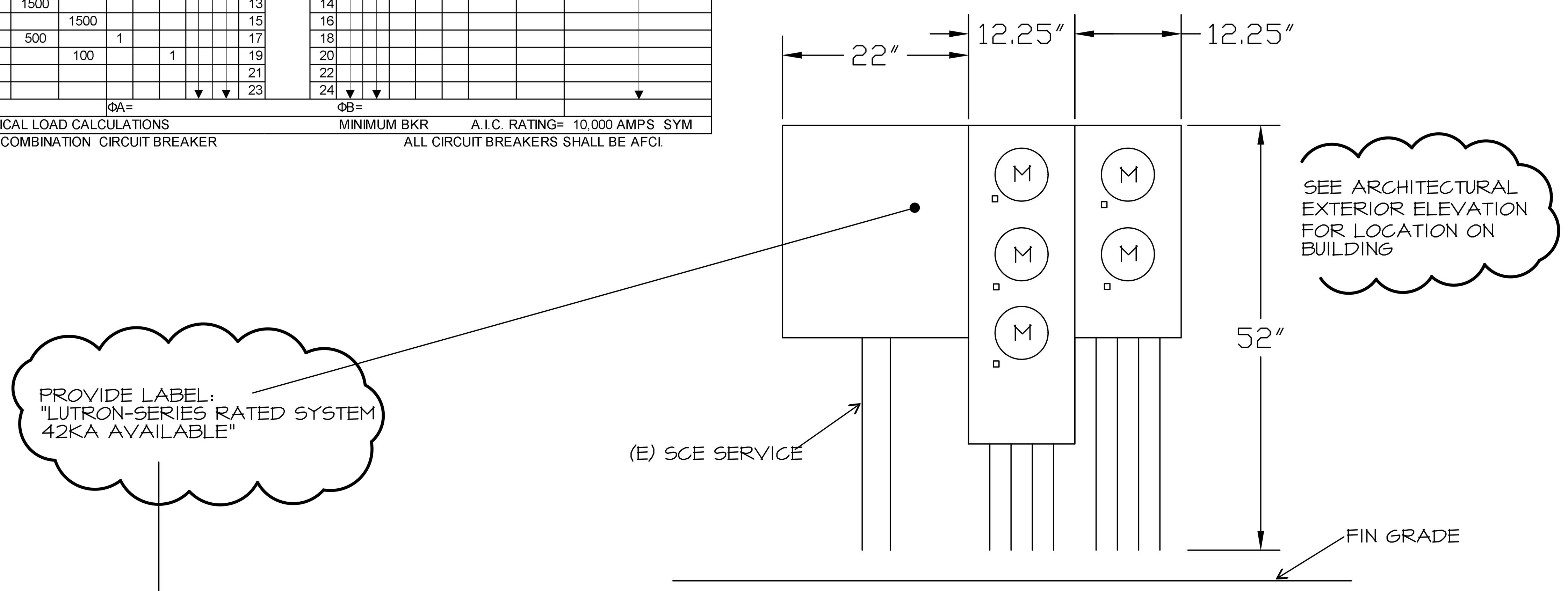

METERING ELEVATION (B)

SCALE: NONE

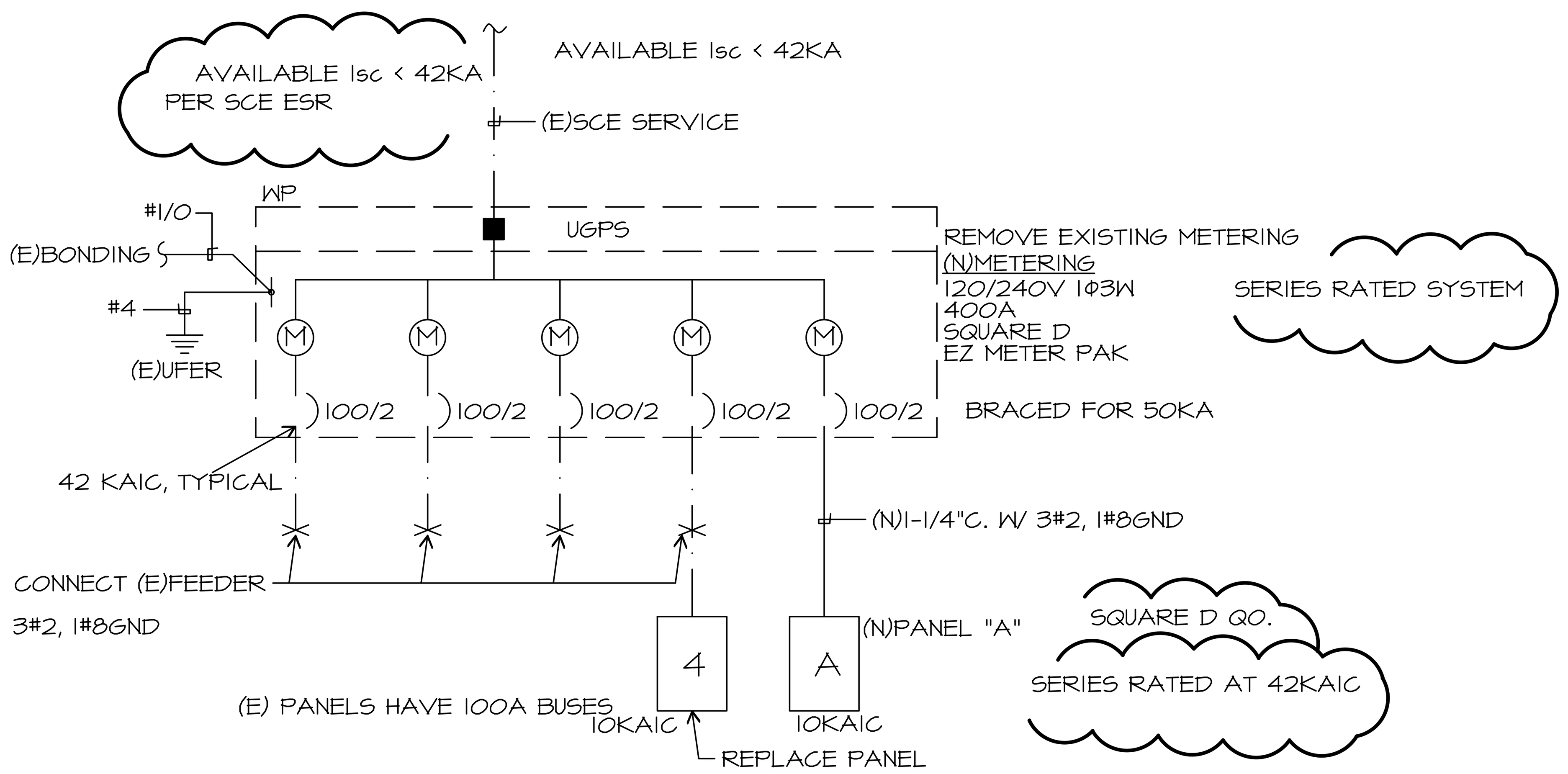

SINGLE LINE DIAGRAM (A)

SCALE: NONE

GENERAL NOTES

1. VISIT JOB SITE AND VERIFY EXISTING CONDITIONS PRIOR TO BID.
2. THE ELECTRICAL WORK SHALL BE INSTALLED IN ACCORDANCE WITH THE CALIFORNIA ELECTRICAL CODE AND ALL APPLICABLE LOCAL ORDINANCES. WHERE PLANS CALL FOR A HIGHER STANDARD THAN APPLICABLE CODES, THE PLANS SHALL GOVERN.
3. CONDUIT RUNS ARE SHOWN DIAGRAMMATICALLY. EXACT LOCATIONS SHALL BE DETERMINED IN THE FIELD TO SUIT FIELD CONDITIONS.
4. ALL ELECTRICAL EQUIPMENT, APPLIANCES AND LIGHTING FIXTURES SHALL BE LISTED BY A RECOGNIZED TEST LAB AND BEAR THAT LABEL OF APPROVAL.
5. CONTRACTOR SHALL FURNISH, INSTALL AND CONNECT ALL MATERIAL AND EQUIPMENT FOR THIS WORK UNLESS OTHERWISE NOTED.
6. FURNISH DISCONNECT SWITCHES AT REMOTE MOTORS.
7. ALL SPACES AS INDICATED ON PANELS OR SWITCHBOARDS SHALL BE COMPLETE WITH HARDWARE AND BUSSING FOR FUTURE BREAKER OR SWITCH.
8. CHECK ARCHITECTURAL PLANS FOR DOOR SWINGS BEFORE INSTALLING SWITCH OUTLETS.
9. GROUNDING AND BONDING SHALL BE PER CODE PLUS ANY ADDITIONAL PROVISIONS SPECIFIED OR SHOWN ON DRAWINGS.
10. ALL CONDUIT RUNS SHALL CONTAIN A CODE SIZED GREEN GROUND WIRE.
11. THESE PLANS ARE NOT COMPLETE UNTIL APPROVED BY THE AUTHORITY HAVING JURISDICTION.
12. ALL FEEDER CONDUCTORS SHALL BE IN CONDUIT. BRANCH CIRCUITS MAY BE NON-METALLIC SHEATHED CABLE.
13. ALL CONDUCTORS SHALL BE COPPER WITH TYPE THHN/THWN INSULATION.
14. COORDINATE WITH SERVING ELECTRICAL UTILITY COMPANY AND MAKE PROVISIONS FOR ELECTRICAL SERVICE ACCORDINGLY. INCLUDE ALL SERVICE COSTS AND UTILITY COMPANY CHARGES IN BID.
15. COORDINATE WITH SERVING TELEPHONE UTILITY COMPANY AND MAKE PROVISIONS FOR TELEPHONE SERVICE ACCORDINGLY. INCLUDE ALL SERVICE COSTS AND ANY UTILITY COMPANY CHARGES IN BID.
16. COORDINATE WITH SERVING CABLE TELEVISION COMPANY AND MAKE PROVISIONS FOR CABLE TELEVISION ACCORDINGLY. INCLUDE ALL SERVICE COSTS AND ANY UTILITY COMPANY CHARGES IN BID.
17. ALL PERMITS SHALL BE OBTAINED AND PAID FOR BY CONTRACTOR.
18. ALL RECEPTACLES IN DWELLING UNITS SHALL BE PROTECTED BY A LISTED ARC FAULT CIRCUIT INTERRUPTER, COMBINATION TYPE PER CEC 210.12
19. TAMPER RESISTANCE RECEPTACLE SHALL BE INSTALLED IN DWELLING UNITS PER CEC 406.11
20. SMOKE DETECTORS SHALL BE 120V, PHOTOELECTRIC/ION COMBINATION UNITS WITH BATTERY BACK UP
21. HALLWAY DETECTOR SHALL BE COMBINATION SMOKE AND CARBON MONOXIDE DETECTOR
22. VERIFY LOCATION OF FLUSH FLOOR RECEPTACLE PRIOR TO ROUGH IN
23. WP EXTERIOR RECEPTACLES SHALL HAVE HUBBEL #ML500 COVERS OR EQUAL
24. MANUFACTURER'S LITERATURE SHOWING PROPOSED LED AND/OR LOW VOLTAGE LIGHT FIXTURES ARE HIGH EFFICACY AND CALIFORNIA CERTIFIED IS TO BE ON SITE AT THE TIME OF FIELD INSPECTION.
25. WHERE BRANCH CIRCUIT WIRING IS MODIFIED, REPLACED OR EXTENDED, THE BRANCH CIRCUIT SHALL BE PROTECTED BY EITHER A LISTED COMBINATION TYPE AFCI LOCATED AT THE ORIGIN OF THE BRANCH CIRCUIT OR A LISTED OUTLET BRANCH-CIRCUIT TYPE AFCI LOCATED AT THE FIRST RECEPTACLE OF THE EXISTING BRANCH CIRCUIT.
26. ELECTRICAL EQUIPMENT FOR INDOOR ELECTRIC VEHICLE CHARGING STATIONS SHALL BE INSTALLED IN ACCORDANCE WITH CRC R328 AND THE CALIFORNIA ELECTRICAL CODE. THE ELECTRICAL SUPPLY CIRCUIT TO REQUIRED MECHANICAL EXHAUST VENTILATION EQUIPMENT SHALL BE INTERLOCKED WITH THE RECHARGING EQUIPMENT USED TO SUPPLY THE VEHICLE BEING CHARGED, AND SHALL REMAIN ENERGIZED DURING THE ENTIRE CHARGING CYCLE.
27. EXCEPT FOR DETACHED STORAGE BUILDINGS 1000 SQ. FEET OR LESS IN SIZE, PERMANENTLY INSTALLED LUMINARIES IN ROOMS OTHER THAN KITCHENS, BATHROOMS, GARAGES, LAUNDRY ROOMS, AND UTILITY ROOMS ARE TO BE HIGH EFFICACY, OR CONTROLLED BY A DIMMER SWITCH, OR CONTROLLED BY AN OCCUPANCY SENSOR THAT DOES NOT TURN ON AUTOMATICALLY OR HAVE AN ALWAYS-ON OPTION.
28. TWO MINIMUM 1" DIAMETER METALLIC CONDUITS SHALL BE PROVIDED THAT ORIGINATE AT A READILY ACCESSIBLE ATTIC LOCATION WITH PROXIMITY TO A SOLAR ZONE AREA COMPLYING WITH CALIFORNIA ENERGY CODE SECTION 110.10 AND TERMINATE AT A MINIMUM 4" ELECTRICAL PANEL. THE ELECTRICAL JUNCTION BOX AND SEGMENT OF CONDUIT RUN IN THE ATTIC SHALL BE PERMANENTLY AND VISIBLY MARKED AS "FOR FUTURE SOLAR PHOTOVOLTAIC".
29. ALL KITCHEN CIRCUITS SHALL HAVE GFCI PROTECTION.
30. ALL SWITCHES AND RECEPTACLES WHERE REQUIRED TO BE ACCESSABLE APPLICABLE REACH RANGE REQUIREMENTS PER CBC CHAPTER 11-B. PROVIDE DETAILS FOR UNOBSTRUCTED AND OBSTRUCTED REACH RANGES ON THE PLNS. NOTE THAT HIGH REACH RANGES SHALL BE TAKEN FROM THE TOP OF THE BOX TO FINISH FLOOR AND LOW REACH RANGES SHALL BE TAKEN FROM THE TOP OF THE BOX TO FINISH FLOOR AND LOW REACH RANGES SHALL BE TAKEN FROM THE BOTTOM OF THE BOX TO FINISH FLOOR. THESE REACH RANGES ARE REFERENCED IN ANNEX J OF THE 2019 CA ELECTRICAL CODE / ANNEX 2017 ANNEX J.

SYMBOLS

- CONDUIT EXISTING
- CONDUIT CONCEALED IN WALL OR CEILING
- CONDUIT CONCEALED UNDER FLOOR OR BELOW GRADE
- CONDUIT STUBBED OUT AND CAPPED
- CONDUIT TURNED UP
- CONDUIT TURNED DOWN
- HATCH MARKS INDICATE NO. OF #12 WIRES IN CODE SIZED CONDUIT (3) MAX. IN 1/2" C., (5) MAX. IN 3/4" C., (8) MAX. IN 1"C., NO MARKS = 2#12
- A-3: HOME RUN: LETTER INDICATES PANEL, NUMBER(S) INDICATES CIRCUIT(S).
- SAWCUT
- GROUND CONNECTION
- DISTRIBUTION SWITCHBOARD OR PANEL
- PANEL, BRANCH CIRCUIT TYPE, SURFACE AND FLUSH
- SIGNAL TERMINAL CABINET, SURFACE & FLUSH
- FLUORESCENT FIXTURE
- OUTLET DATA: BAR INDICATES WALL MOUNT, LETTER INDICATES SWITCH CONTROL, NO. INDICATES CIRCUIT.
- SURFACE FIXTURE ON FLUSH OUTLET.
- RECESSED FIXTURE WITH JUNCTION BOX FOR THRU WIRING
- EXIT LIGHT WITH ARROWS AS SHOWN ON PLANS, WALL AND CEILING MOUNT.
- LOW LEVEL EXIT SIGN, +6" AFF, +4" FROM DOOR JAMB
- A / 100: LIGHT FIXTURE DESIGNATION, LETTER INDICATES TYPE, NO. INDICATES WATTAGE. SEE FIXTURE SCHEDULE.
- FC / 1: MECHANICAL EQUIPMENT DESIGNATION. SEE MECHANICAL DRAWINGS.
- SPECIAL RECEPTACLE - SEE PLAN
- METER
- FLUSH FLOOR RECEPTACLE
- RECEPTACLE, DUPLEX, 15A, 125V, NEMA 5-15R +18" U.N.O.
- DUPLEX RECEPTACLE MTD. ABOVE BACKSPLASH
- DUPLEX RECEPTACLE W/LOWER HALF SWITCHED
- GFI: GROUND FAULT CIRCUIT INTERRUPTING RECEPTACLE
- DOUBLE DUPLEX RECEPTACLE
- CEILING RECEPTACLE
- RECEPTACLE, DUPLEX, 20A, 125V, NEMA 5-20R +18" U.N.O.
- JUNCTION BOX 4" SQUARE, 1-1/2" DEEP U.N.O.
- THERMOSTAT F.B.O. +48"
- MOTOR, NO. INDICATES HORSEPOWER
- CLOCK OUTLET +7'-6" U.N.O.
- DISCONNECT SWITCH, NON-FUSED
- DISCONNECT SWITCH FUSED HORSEPOWER RATED OR SIZED AS NOTED
- COMBINATION MAGNETIC STARTER WITH DISCONNECT SWITCH AND FUSES
- MAGNETIC MOTOR STARTER W/OVERLOADS IN EACH PHASE
- DIMMER W/INTEGRAL "ON-OFF" SW.
- PUSHBUTTON
- PHOTOCELL
- SMOKE DETECTOR
- TELEPHONE/COMPUTER/DATA OUTLET, TWO GANG BOX W/1 GANG COVERPLATE & GROMMETED OPENING +18" U.N.O.
- CABLE TV OUTLET +18" U.N.O.
- MOTION SENSOR
- $ EXISTING SWITCH
- S SINGLE POLE SWITCH
- S^2 DOUBLE POLE SWITCH
- S^3 THREE WAY SWITCH
- S^P SWITCH W/PILOT LT.
- (S, S^2, S^3, S^P: QUIET TOGGLE TYPE RATED AT 20A 120/277V AC. +42" U.N.O.)
- S^M MANUAL MOTOR STARTER
- FACP FIRE ALARM CONTROL PANEL
- GFI GROUND FAULT CIRCUIT INTERRUPTING
- LST LABOR SAVING TANDEM
- MLO MAIN LUGS ONLY
- W/ WITH
- C.O. CONDUIT ONLY
- W.P. WEATHERPROOF
- F.B.O. FURNISHED BY OTHERS, INSTALL & CONNECT
- U.N.O. UNLESS NOTED OTHERWISE
- N.E.C. NATIONAL ELECTRICAL CODE
- N.I.C. NOT IN CONTRACT
- (E) EXISTING
- (N) NEW
- (R) REMOVE
- (RL) RELOCATE
- S/M SURFACE MOUNT
- U/G UNDERGROUND
- CWP COLD WATER PIPE
- AFF ABOVE FINISHED FLOOR
- HACR HEATING AND AIR CONDITIONING RATED CIRCUIT BREAKER
- N.L. NIGHT LIGHT

NOTE: NOT ALL SYMBOLS SHOWN ARE USED ON THIS PROJECT.

THESE DRAWINGS AND SPECIFICATIONS ARE THE PROPERTY AND COPYRIGHT OF LAUTERBACH & ASSOCIATES, ALL RIGHTS RESERVED, AND SHALL NOT BE USED ON ANY OTHER WORK OR PROJECT EXCEPT BY WRITTEN AGREEMENT WITH LAUTERBACH & ASSOCIATES. WRITTEN DIMENSIONS SHALL TAKE PRECEDENCE OVER SCALED DIMENSIONS AND SHALL BE VERIFIED ON THE JOB SITE. ANY DISCREPANCY SHALL BE BROUGHT TO THE NOTICE OF LAUTERBACH & ASSOCIATES PRIOR TO COMMENCEMENT OF ANY WORK.

Project Architect
LAUTERBACH & ASSOCIATES
A R C H I T E C T S • I N C.
David C. Kesterson, Architect • Ilona Scott, Architect • Mark S. Pettit, Architect
300 MONTGOMERY AVENUE, OXNARD, CALIFORNIA 93036 | 805-988-0912 | FAX 805-981-4510 | www.la-arch.com

JMPE
ELECTRICAL ENGINEERING
LIGHTING DESIGN
CA REGISTRATION NO E13083
20033
627 OLIVE STREET
SANTA BARBARA CA 93101
(805) 569-9216
FAX (805) 569-2405
email : maloney@jmpe.net
www.jmpe.net

REGISTERED PROFESSIONAL ENGINEER
JOHN MALONEY
No. E015085
EXP. 06/30/2021
ELECTRICAL
STATE OF CALIFORNIA

CONCORD DRIVE APARTMENTS
2950 & 2956 CONCORD DRIVE
OXNARD, CA, 93036

CITY OF OXNARD HOUSING AUTHORITY
435 S. D STREET
OXNARD, CALIFORNIA 93030

NO	DESCRIPTION	DATE
	REVISIONS	12-01-2020
1	SUBMITTAL	02-26-2020

ISSUE

JOB NO. 20-190708

DRAWN BY: -
CHECKED BY: -
PROJECT MANAGER: -
PRINT DATE:

GENERAL NOTES, SYMBOLS & DETAILS

EC-001

File Path

STATE OF CALIFORNIA
Lighting – Single Family Dwellings
CEC-CF2R-LTG-01-E (Revised 01/20) CALIFORNIA ENERGY COMMISSION

CERTIFICATE OF INSTALLATION	CF2R-LTG-01-E
Lighting – Single Family Dwellings	(Page 1 of 3)

Project Name: **CONCORD DRIVE APARTMENTS**	Enforcement Agency:	Permit Number:
Dwelling Address:	City:	Zip Code:

A. Installed Lighting and Controls Select Yes or No according to whether your work on the project includes each of the following types of lighting and controls. See Sections B through H for applicable requirements.		Y or N
01	High Efficacy luminaires installed in any interior rooms. (See Section B.)	
02	JA8 compliant luminaires and controls installed in any interior rooms. (See Section B.)	
03	Recessed downlight luminaire in ceilings in any interior rooms. (See Section C.)	
04	Screw-based luminaires installed in any interior rooms. (See Section D.)	
05	Enclosed or recessed luminaires installed in any interior rooms. (See Section D.)	
06	Lighting and controls in bathrooms. (See Section E.)	
07	Lighting and controls in laundry rooms. (See Section E.)	
08	Lighting and controls in utility rooms. (See Section E.)	
09	Lighting and controls in garage. (See Section E.)	
10	Outdoor lighting and controls. (See Section H.)	
11	Blank electrical boxes installed more than 5 feet from finished floor. (See Section F.)	
12	Internally illuminated address signs. (See Section G.)	

B. High Efficacy Luminaires and Controls	
01	150.0(k)1A and Table 150.0-A: All luminaires are installed with: • Light sources of one of the lighting technologies specified under the "High Efficacy" column of Table 150.0-A; or • JA8 compliant light sources and the light sources are marked with a label reading "JA8-2019" or "JA8-2019-E".
02	150.0(k)2I: Dimming controls for all luminaires with dimmable JA8 compliant light sources except for those controlled by occupancy or vacancy sensors.
03	150.0(k)2A: Forward phase cut dimmers used with LED light sources shall comply with NEMA SSL 7A.
The responsible person's signature on this compliance document affirms that all applicable requirements in this table have been met.	

C. Recessed Downlight Luminaires in Ceilings	
01	150.0(k)1Cv: Do not contain screw based sockets.
02	The luminaire shall be marked with "JA8-2019".
03	150.0(k)1Ci: Listed for zero clearance insulation contact (IC).
04	150.0(k)1Cii: Has label certifying air tight.
05	150.0(k)1Ciii: Sealed with a gasket or caulk between the luminaire housing and ceiling, and all air leakage paths between conditioned and unconditioned spaces are sealed with a gasket or caulk.
06	150.0(k)1Civ: Allows ballast maintenance and replacement to be readily accessible to building occupants from below the ceiling without requiring the cutting of holes in the ceiling.
The responsible person's signature on this compliance document affirms that all applicable requirements in this table have been met.	

D. Additional Luminaire Requirements	
01	150.0(k)1G: **Screw based luminaires** are installed with all of the following requirements: • The luminaire is not recessed downlight luminaire in ceilings; and • The luminaires are installed with lamps or light sources marked with "JA8-2019".
02	150.0(k)1H: **Enclosed or Recessed luminaires** are installed with lamps or other separable light sources marked with "JA8-2019-E".
03	150.0(k)1D: Ballasts for fluorescent lamps rated 13 Watts or greater are electronic.
04	150.0(k)1E: Night lights, step lights and path lights are rated to consume no more than 5 Watts of power and emit more than 150 lumens, or in compliance with Table 150.0-A, or controlled by vacancy sensors.
05	150.0(k)1F: **Lighting integral to exhaust fans** meets the requirements of Table 150.0-A, with exception to the lighting installed by the *manufacturer* in kitchen exhaust hoods.
The responsible person's signature on this compliance document affirms that all applicable requirements in this table have been met.	

Registration Number: Registration Date/Time: HERS Provider:
CA Building Energy Efficiency Standards - 2019 Residential Compliance January 2020

STATE OF CALIFORNIA
Lighting – Single Family Dwellings
CEC-CF2R-LTG-01-E (Revised 01/20) CALIFORNIA ENERGY COMMISSION

CERTIFICATE OF INSTALLATION	CF2R-LTG-01-E
Lighting – Single Family Dwellings	(Page 2 of 3)

Project Name: **CONCORD DRIVE APARTMENTS**	Enforcement Agency:	Permit Number:
Dwelling Address:	City:	Zip Code:

E. Additional Lighting Controls	
01	150.0(j2I): In **bathrooms, garages, laundry rooms, and utility rooms**, at least one luminaire in each of these spaces is controlled by an occupant or vacancy sensor providing automatic-off functionality.
02	150.0(j2B: **Exhaust fans** are controlled separately from lighting systems, or the lighting can be turned OFF on the same control as the fan.
03	150.0(j2C: Lighting has readily accessible wall-mounted controls that allow the lighting to be manually turned ON and OFF.
04	150.0(j2D: Lighting controls and equipment are installed in accordance with manufacturer's instructions.
05	150.0(j2E: No controls bypasses a dimmer, occupancy sensor or vacancy sensor function where that dimmer or sensor has been installed to comply with Section 150.0(k)
06	150.0(j2F: Lighting controls comply with the applicable requirements in Section 110.9.
07	150.0(j2G: **Energy Management Control Systems** used to comply with control requirements provide the functionality of the specified control in accordance with Section 110.9, meet the installation certificate requirements in Section 130.4, meets the EMCS requirements in Section 130.0(e), and complies with all other applicable requirements in Section 150.0(k)2.
08	150.0(j2H: A **multi-scene programmable controller** used to comply with dimmer requirements provides the functionality of a dimmer in accordance with Section 110.9, and complies with all other applicable requirements in Section 150.0(k)2.
09	150.0(j2K: **Undercabinet lighting** is controlled separately from ceiling installed lighting.
The responsible person's signature on this compliance document affirms that all applicable requirements in this table have been met.	

F. Blank Electrical Boxes	
01	150.0(k)1B: The number of blank electrical boxes installed more than five feet above the finished floor and do not contain a luminaire or other device, are not greater than the number of bedrooms. The blank boxes are served by dimmer, vacancy sensor, or fan speed control.
The responsible person's signature on this compliance document affirms that all applicable requirements in this table have been met.	

G. Address Signs	
01	150.0(k)1K: Internally illuminated address signs. Internally illuminated address signs shall either: • Comply with Section 140.8. Applicable nonresidential sign lighting compliance forms shall also be submitted; or • Consume no more than 5 Watts of power.
The responsible person's signature on this compliance document affirms that all applicable requirements in this table have been met.	

H. Single Family Outdoor Lighting	
01	150.0(k)1A and Table 150.0-A: High efficacy outdoor lighting or LED light sources are installed.
02	150.0(k)3A: Outdoor lighting is controlled by a manual ON and OFF switch that permits one of the following automatic actions: • Controlled by a photocell and either a motion sensor or an automatic time switch control; or • Controlled by an astronomical time clock control. Controls that override to ON shall not be allowed unless the override automatically returns the automatic control to its normal operation within 6 hours. An energy management control that provides the specified lighting control functionality and complies with all requirements applicable to the specified controls may be used to meet the above requirements.
The responsible person's signature on this compliance document affirms that all applicable requirements in this table have been met.	

Registration Number: Registration Date/Time: HERS Provider:
CA Building Energy Efficiency Standards - 2019 Residential Compliance January 2020

STATE OF CALIFORNIA
Lighting – Single Family Dwellings
CEC-CF2R-LTG-01-E (Revised 01/20) CALIFORNIA ENERGY COMMISSION

CERTIFICATE OF INSTALLATION	CF2R-LTG-01-E
Lighting – Single Family Dwellings	(Page 3 of 3)

Project Name: **CONCORD DRIVE APARTMENTS**	Enforcement Agency:	Permit Number:
Dwelling Address:	City:	Zip Code:

DOCUMENTATION AUTHOR'S DECLARATION STATEMENT

1. I certify that this Certificate of Installation documentation is accurate and complete.

Documentation Author Name:	Documentation Author Signature:
Documentation Author Company Name:	Date Signed:
Address:	CEA/HERS Certification Identification (if applicable):
City/State/Zip:	Phone:

RESPONSIBLE PERSON'S DECLARATION STATEMENT

I certify the following under penalty of perjury, under the laws of the State of California:

1. The information provided on this Certificate of Installation is true and correct.
2. I am either: a) a responsible person eligible under Division 3 of the Business and Professions Code in the applicable classification to accept responsibility for the system design, construction, or installation of features, materials, components, or manufactured devices for the scope of work identified on this Certificate of Installation, and attest to the declarations in this statement, or b) I am an authorized representative of the responsible person and attest to the declarations in this statement on the responsible person's behalf.
3. The constructed or installed features, materials, components or manufactured devices (the installation) identified on this Certificate of Installation conforms to all applicable codes and regulations and the installation conforms to the requirements given on the Certificate of Compliance, plans, and specifications approved by the enforcement agency.
4. I will ensure that a registered copy of this Certificate of Installation shall be posted or made available with the building permit(s) issued for the building, and made available to the enforcement agency for all applicable inspections. I understand that a registered copy ofthis Certificate of Installation is required to be included with the documentation the builder provides to the building owner at occupancy.

Responsible Builder/Installer Name:	Responsible Builder/Installer Signature:	
Company Name: (Installing Subcontractor or General Contractor or Builder/Owner)	Position With Company (Title):	
Address:	CSLB License:	
City/State/Zip:	Phone:	Date Signed:

Registration Number: Registration Date/Time: HERS Provider:
CA Building Energy Efficiency Standards - 2019 Residential Compliance January 2020

CERTIFICATE OF INSTALLATION – USER INSTRUCTIONS	CF2R-LTG-01-E
Lighting – Single Family – LTG-01	(Page 1 of 1)

CF2R-LTG-01-E User Instructions

There are two version of the residential lighting Certificate of Installation. This version, the CF2R-LTG-01-E, is primarily used for demonstrating compliance with the residential lighting Standards for single-family dwellings.

The LTG-01 shall also be used to demonstrate compliance with the residential lighting requirements for high-rise residential dwelling units; outdoor lighting that is attached to a high-rise residential or hotel/motel building, and is separately controlled from the inside of a dwelling unit or guest room; fire station dwelling accommodations; hotel and motel guest rooms; and, dormitory and senior housing dwelling accommodations. When using the CF2R-LTG-01-E to demonstrate compliance with the lighting in the dwelling units, compliance with lighting that is not in the dwelling units, such as lighting in common areas, shall be demonstrated using the nonresidential lighting compliance documentation.

The other version of the residential lighting Certificate of Compliance, the CF2R-LTG-02-E, is used for demonstrating compliance with the residential lighting Standards for low-rise multi-family dwellings. The primary difference between the LTG-02 and LTG-01 is that the LTG-02 includes additional requirements for demonstrating compliance with residential outdoor lighting, and common areas associated with low-rise multi-family dwelling units.

Section A. Installed Lighting and Controls
This table is used to identify the scope of the work being covered by the responsible person signing this document. One person may be responsible for all of the measures in this table, or several people may each be responsible for only a portion of the measures. If several people are responsible, each person must separately fill out this Certificate of Installation for those measures for which they are responsible. In some situations, such as for alterations and additions, only some of the measures may be included in the total scope of work.

For rows 1 through 12 – insert 'Y' for each measure that is included in the scope of work, and insert 'N' for each measure that is not included in the scope of work.

Section B. High Efficacy Luminaires and Controls
This table is a list of mandatory requirements for high efficacy luminaires.

Section C. Recessed Downlight Luminaires in Ceilings
This table is a list of mandatory requirements for recessed downlight luminaires in ceilings.

Section D. Additional Luminaire Requirements
This table is a list of additional requirements for luminaires.

Section E. LED Luminaires
This table is a list of mandatory requirements for LED luminaires.

Section F. Blank Electrical Boxes
This table is a list of mandatory requirements for blank electrical boxes.

Section G. Address Signs
This table is a list of mandatory requirements for address signs.

Section H. Single Family Outdoor Lighting
This table is a list of mandatory requirements for single family outdoor lighting.

CA Building Energy Efficiency Standards - 2019 Residential Compliance January 2020

File Path

THESE DRAWINGS AND SPECIFICATIONS ARE THE PROPERTY AND COPYRIGHT OF LAUTERBACH & ASSOCIATES. ALL RIGHTS RESERVED, AND SHALL NOT BE USED ON ANY OTHER WORK OR PROJECT EXCEPT BY WRITTEN AGREEMENT WITH LAUTERBACH & ASSOCIATES. WRITTEN DIMENSIONS SHALL TAKE PRECEDENCE OVER SCALED DIMENSIONS AND SHALL BE VERIFIED ON THE JOB SITE. ANY DISCREPANCY SHALL BE BROUGHT TO THE NOTICE OF LAUTERBACH & ASSOCIATES PRIOR TO COMMENCEMENT OF ANY WORK.

Project Architect
LAUTERBACH & ASSOCIATES
A R C H I T E C T S I N C.
David C. Kesterson, Architect • Ilona Scott, Architect • Mark S. Pettit, Architect
300 MONTGOMERY AVENUE, OXNARD, CALIFORNIA 93036 | 805-988-0912 | FAX 805-981-4510 | www.la-arch.com

JMPE
ELECTRICAL ENGINEERING
LIGHTING DESIGN
CA REGISTRATION NO E13083
20033
627 OLIVE STREET
SANTA BARBARA CA 93101
(805) 569-8216
FAX (805) 569-2405
email : maloney@jmpe.net
www.jmpe.net
REGISTERED PROFESSIONAL ENGINEER
JAMES MALONEY
E013083
EXP. 06/30/202
ELECTRICAL
STATE OF CALIFORNIA

CONCORD DRIVE APARTMENTS
2950 & 2956 CONCORD DRIVE
OXNARD, CA, 93036

CITY OF OXNARD HOUSING AUTHORITY
435 S. D STREET
OXNARD, CALIFORNIA 93030

NO	DESCRIPTION	DATE
1	SUBMITTAL	02-26-2020

ISSUE

JOB NO. 20-190708

DRAWN BY: -
CHECKED BY: -
PROJECT MANAGER: -
PRINT DATE:

RESIDENTIAL LIGHTING COMPLIANCE FORMS

EC-002

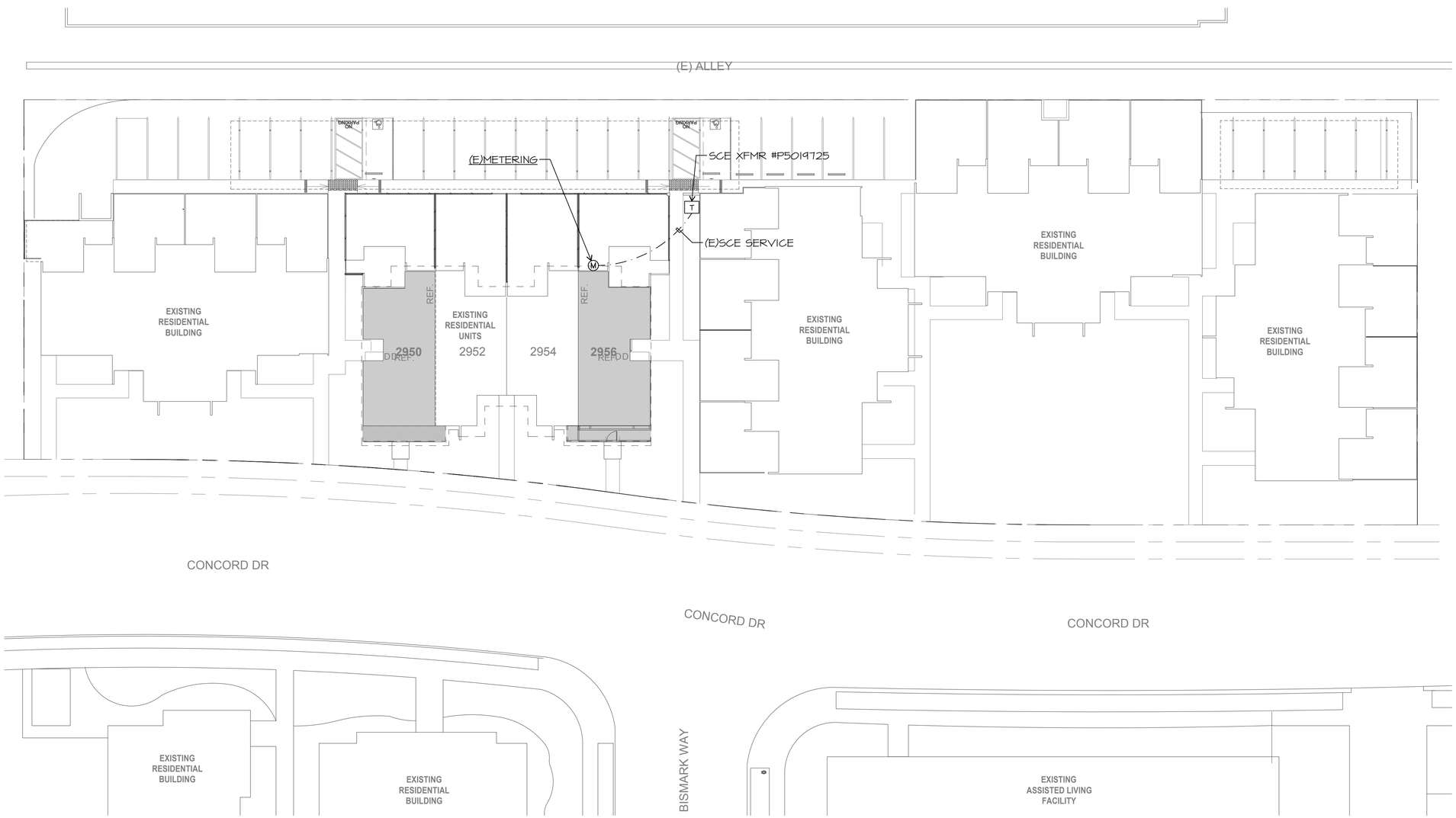

ELECTRICAL SITE PLAN

SCALE: 1/16" = 1'-0"

Project Architect

LAUTERBACH & ASSOCIATES
ARCHITECTS INC.
David C. Kesterson, Architect • Ilona Scott, Architect • Mark S. Pettit, Architect
300 MONTGOMERY AVENUE, OXNARD, CALIFORNIA 93036 | 805-988-0912 | FAX 805-981-4510 | www.la-arch.com

JMPE
ELECTRICAL ENGINEERING
LIGHTING DESIGN
CA REGISTRATION NO E13083
20033
627 OLIVE STREET
SANTA BARBARA CA 93101
(805) 569-3216
FAX (805) 569-2405
email : maloney@jmpe.net
www.jmpe.net

REGISTERED PROFESSIONAL ENGINEER
E013083
EXP. 06/30/202
ELECTRICAL
STATE OF CALIFORNIA

CONCORD DRIVE APARTMENTS

2950 & 2956 CONCORD DRIVE
OXNARD, CA, 93036

CITY OF OXNARD HOUSING AUTHORITY

435 S. D STREET
OXNARD, CALIFORNIA 93030

NO	DESCRIPTION	DATE
1	SUBMITTAL	02-26-2020

ISSUE

JOB NO. 20-190708

DRAWN BY: -
CHECKED BY: -
PROJECT MANAGER: -
PRINT DATE:

ELECTRICAL SITE PLAN

EC-003

THESE DRAWINGS AND SPECIFICATIONS ARE THE PROPERTY AND COPYRIGHT OF LAUTERBACH & ASSOCIATES. ALL RIGHTS RESERVED, AND SHALL NOT BE USED ON ANY OTHER WORK OR PROJECT EXCEPT BY WRITTEN AGREEMENT WITH LAUTERBACH & ASSOCIATES. WRITTEN DIMENSIONS SHALL TAKE PRECEDENCE OVER SCALED DIMENSIONS AND SHALL BE VERIFIED ON THE JOB SITE. ANY DISCREPANCY SHALL BE BROUGHT TO THE NOTICE OF LAUTERBACH & ASSOCIATES PRIOR TO COMMENCEMENT OF ANY WORK.

File Path

ELECTRICAL DEMOLITION NOTES

1. ALL DEVICES TO BE REMOVED, REMOVE ALL DEVICES, WIRING, BOXES, CONDUIT + FITTINGS COMPLETE.
2. WHERE REMOVED DEVICES SERVE DOWNSTREAM ONES TO REMAIN, RECONNECT THESE.

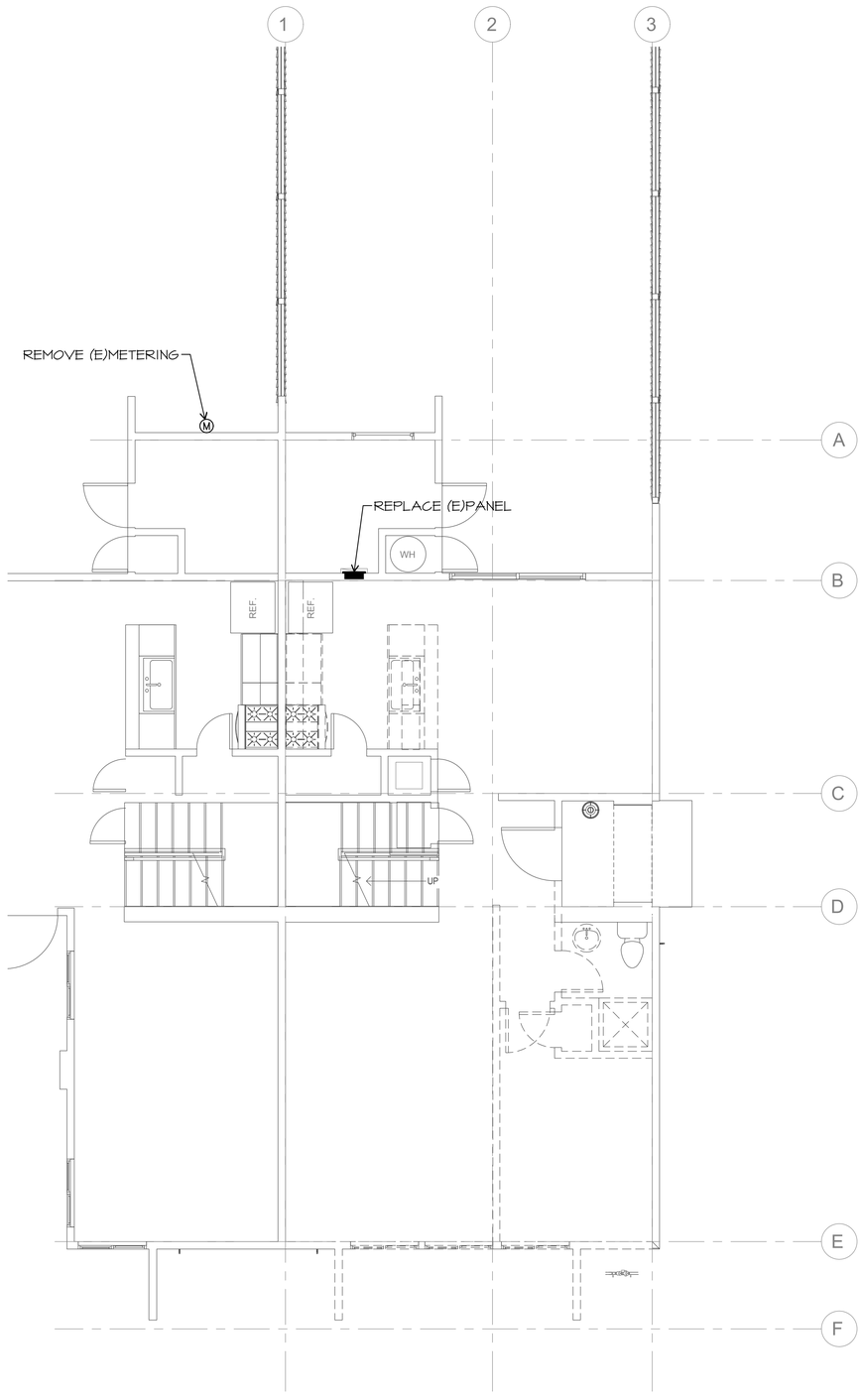

1 1ST FLOOR ELECTRICAL DEMOLITION PLAN

SCALE: 1/4" = 1'-0"

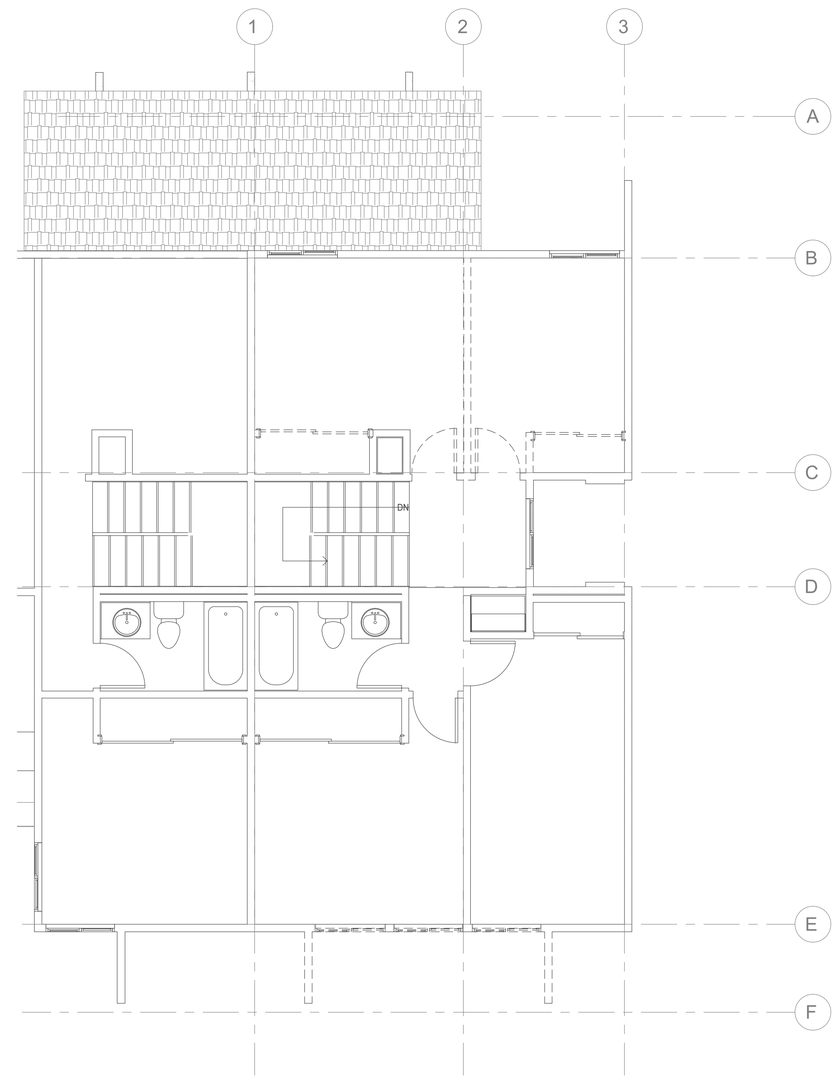

2 2ND FLOOR ELECTRICAL DEMOLITION PLAN

SCALE: 1/4" = 1'-0"

THESE DRAWINGS AND SPECIFICATIONS ARE THE PROPERTY AND COPYRIGHT OF LAUTERBACH & ASSOCIATES. ALL RIGHTS RESERVED, AND SHALL NOT BE USED ON ANY OTHER WORK OR PROJECT EXCEPT BY WRITTEN AGREEMENT WITH LAUTERBACH & ASSOCIATES. WRITTEN DIMENSIONS SHALL TAKE PRECEDENCE OVER SCALED DIMENSIONS AND SHALL BE VERIFIED ON THE JOB SITE. ANY DISCREPANCY SHALL BE BROUGHT TO THE NOTICE OF LAUTERBACH & ASSOCIATES PRIOR TO COMMENCEMENT OF ANY WORK.

Project Architect

LAUTERBACH & ASSOCIATES
ARCHITECTS INC.
David C. Kesterson, Architect • Ilona Scott, Architect • Mark S. Pettit, Architect
300 MONTGOMERY AVENUE, OXNARD, CALIFORNIA 93036 | 805-988-0912 | FAX 805-981-4510 | www.la-arch.com

JMPE
ELECTRICAL ENGINEERING
LIGHTING DESIGN
CA REGISTRATION NO E13083
20033
627 OLIVE STREET
SANTA BARBARA CA 93101
(805) 569-9216
FAX (805) 569-2405
email : maloney@jmpe.net
www.jmpe.net

REGISTERED PROFESSIONAL ENGINEER
JAMES MALONEY
E013083
EXP. 06/30/202
ELECTRICAL
STATE OF CALIFORNIA

CONCORD DRIVE APARTMENTS

2950 & 2956 CONCORD DRIVE
OXNARD, CA, 93036

CITY OF OXNARD HOUSING AUTHORITY

435 S. D STREET
OXNARD, CALIFORNIA 93030

NO	DESCRIPTION	DATE
1	SUBMITTAL	02-26-2020

ISSUE

JOB NO. 20-190708

DRAWN BY: -
CHECKED BY: -
PROJECT MANAGER: -
PRINT DATE:

DEMO FLOOR PLANS 1ST & 2ND

EC-100

File Path

ELECTRICAL NOTES

1. ALL OUTLETS IN DWELLING UNITS SHALL BE PROTECTED BY A LISTED ARC FAULT CIRCUIT INTERRUPTER, COMBINATION TYPE PER CEC 210.12
2. TAMPER RESISTANCE RECEPTACLE SHALL BE INSTALLED IN DWELLING UNITS PER CEC 406.11
3. SMOKE DETECTORS SHALL BE 120V, INTERCONNECTED, PHOTOELECTRIC/ION UNITS WITH BATTERY BACK UP

4. HALLWAY DETECTORS SHALL BE COMBINATION SMOKE AND CARBON MONOXIDE DETECTOR. PART #KIDDE KN-COSM-BA
5. VERIFY LOCATION OF FLUSH FLOOR RECEPTACLE PRIOR TO ROUGH IN
6. VACANCY SENSOR SWITCH SENSOR SWITCH #WSD-PDT-WH
7. DIMMER
8. 2 POLE VACANCY SENSOR SWITCH SENSOR SWITCH #WSD-2P-PDT-WH FAN

9. RESIDENCE SHALL BE PROTECTED BY APPROVED FIRE WARNING SYSTEM PER NFPA 72
10. EXHAUST FAN WITH MOTION & HUMIDITY CONTROL

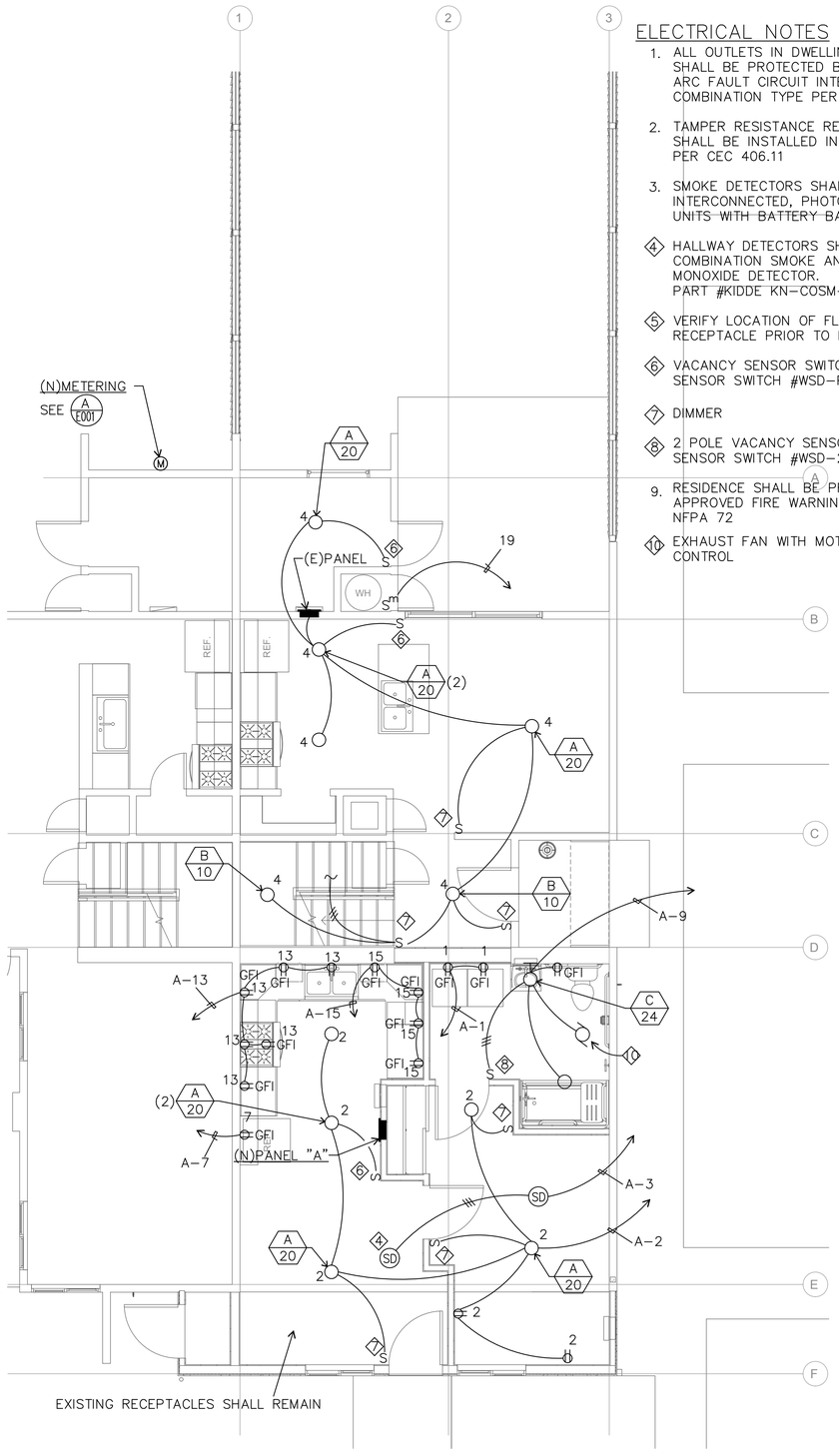

1 1ST FLOOR ELECTRICAL PLAN
SCALE: 1/4" = 1'-0"

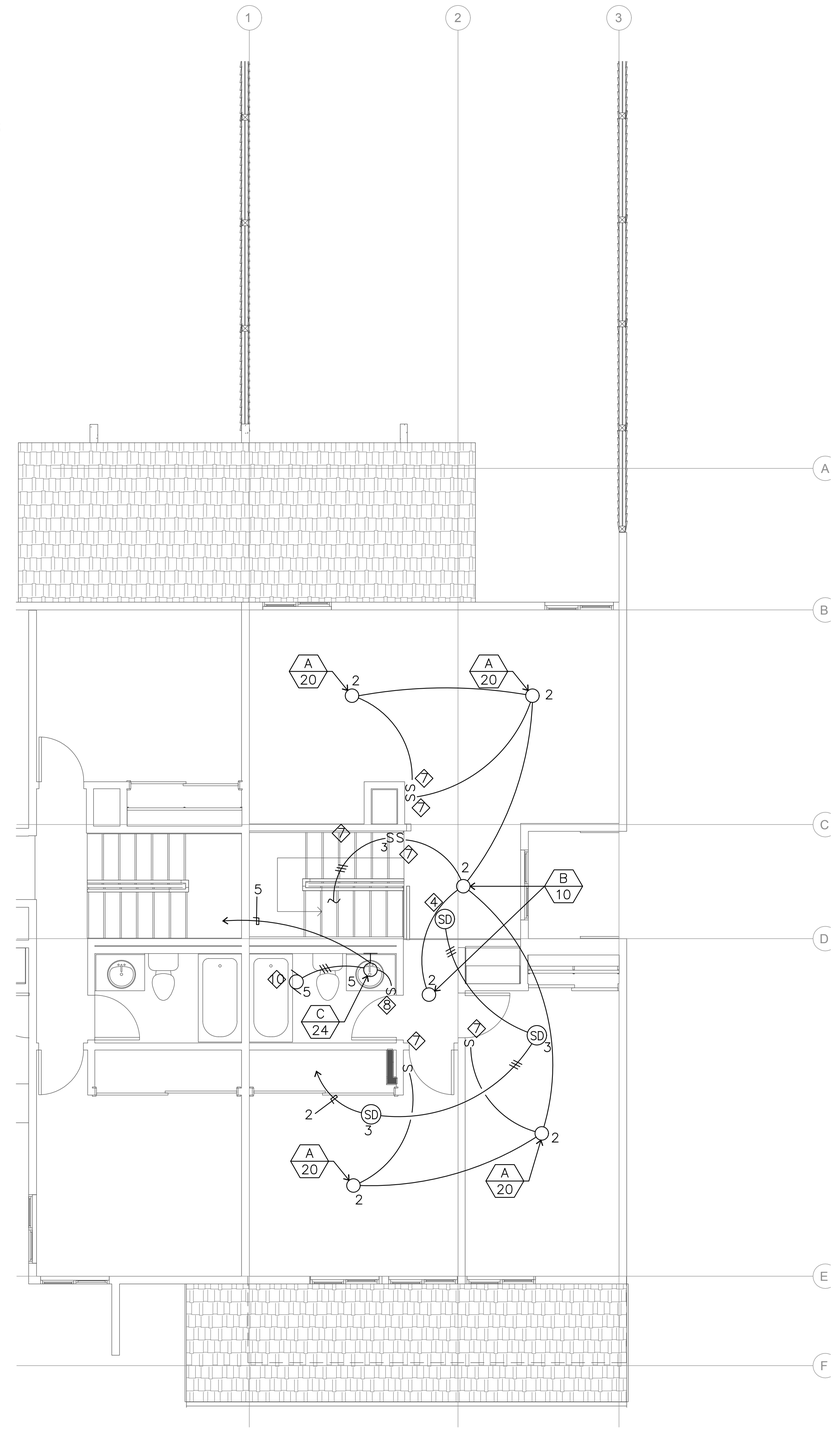

2 2ND FLOOR ELECTRICAL PLAN
SCALE: 1/4" = 1'-0"

Project Architect
LAUTERBACH & ASSOCIATES
ARCHITECTS, INC.
David C. Kesterson, Architect • Ilona Scott, Architect • Mark S. Pettit, Architect
300 MONTGOMERY AVENUE, OXNARD, CALIFORNIA 93036 | 805-988-0912 | FAX 805-981-4510 | www.la-arch.com

JMPE
ELECTRICAL ENGINEERING
LIGHTING DESIGN
CA REGISTRATION NO E13083
20033
627 OLIVE STREET
SANTA BARBARA CA 93101
(805) 569-9216
FAX (805) 569-2405
email : maloney@jmpe.net
www.jmpe.net
REGISTERED PROFESSIONAL ENGINEER
EDWARD MALONEY
EXP. 06/30/2021
ELECTRICAL
STATE OF CALIFORNIA

CONCORD DRIVE APARTMENTS

2950 & 2956 CONCORD DRIVE
OXNARD, CA, 93036

CITY OF OXNARD HOUSING AUTHORITY

435 S. D STREET
OXNARD, CALIFORNIA 93030

NO	DESCRIPTION	DATE
1	SUBMITTAL	02-26-2020

ISSUE

JOB NO. 20-190708

DRAWN BY: -
CHECKED BY: -
PROJECT MANAGER: -
PRINT DATE:

ELECTRICAL FLOOR PLANS - 1ST & 2ND

EC-101

THESE DRAWINGS AND SPECIFICATIONS ARE THE PROPERTY AND COPYRIGHT OF LAUTERBACH & ASSOCIATES. ALL RIGHTS RESERVED, AND SHALL NOT BE USED ON ANY OTHER WORK OR PROJECT EXCEPT BY WRITTEN AGREEMENT WITH LAUTERBACH & ASSOCIATES. WRITTEN DIMENSIONS SHALL TAKE PRECEDENCE OVER SCALED DIMENSIONS AND SHALL BE VERIFIED ON THE JOB SITE. ANY DISCREPANCY SHALL BE BROUGHT TO THE NOTICE OF LAUTERBACH & ASSOCIATES PRIOR TO COMMENCEMENT OF ANY WORK.

File Path

CITY COUNCIL AGENDA REPORT

INFORMATION/CONSENT AGENDA
AGENDA ITEM NO. L.2

DATE: September 19, 2023

TO: Board of Commissioners of the Housing Authority of the City of Oxnard

FROM: Emilio Ramirez, Housing Director, (805) 385-8094, emilio.ramirez@oxnard.org

SUBJECT: Second Amendment to Agreement 9292-21-HO for Security Services.

RECOMMENDATION

That the Board of Commissioners of the Housing Authority of the City of Oxnard approve and authorize the execution of a Second Amendment to Agreement 9292-21-HO with Alltech Industries, Inc. in the amount of $99,250.80 for a total agreement value of $302,649.12 using funds from the Low Rent Public Housing Operating Funds budget and Housing Choice Voucher Administrative Fees budget.

(This item did not originate in Committee. The terms of the original agreement were considered by Board of Commissioners on September 7, 2021.)

BACKGROUND

The Housing Authority of the City of Oxnard owns and operates 520 public housing units scattered throughout Oxnard. In 2020, the resident advisory board consisting of tenant commissioners, public housing residents, and Section 8 program participants requested a meeting with staff to discuss safety concerns at various public housing sites. Residents of the Pleasant Valley Village and Colonia Village sites expressed concerns about an increase in criminal activity coupled with excessive unauthorized parking. Residents also expressed concern about the number of unauthorized individuals loitering in common areas that are not visible and vandalizing vacant units.

At the meeting between staff and residents, it was decided to improve enforcement of parking rules, increase lighting, provide safety education, and hire a security firm for enforcement after business hours.

In February 2021, the Housing Authority of the City of Oxnard solicited bids for security services for various public housing properties. Following the bidding process, the Board of Commissioners of the Housing Authority of the City of Oxnard approved and authorized the Executive Director to execute Agreement Number 9292-21-HO on September 7, 2021. The initial term was from September 13, 2021 to September 12, 2022. That agreement allowed the option to extend the initial term of the agreement for up to three (3) additional one year terms). The Housing Authority of the City of Oxnard extended the original agreement (First Amendment) by one-year effective September 12, 2022, as well as increased the hourly rate and decreased the patrol hours from 12 hours to 8 hours. The First Amendment expires on September 30, 2023.

DISCUSSION

With the security contractor in place, the issues communicated by residents and personnel have significantly decreased. Based on the satisfactory performance and continued need for services, the Housing Authority of the City of Oxnard is seeking approval to extend the contract term of one additional year (September 30, 2023 to September 30, 2024). Under the proposed amendment, the patrol services hourly rate will increase and the patrol hours will remain at eight (8) hours per day.

The scope of work includes routine patrolling, professional handling of security issues, and parking enforcement seven days a week during non-business hours at the Pleasant Valley Village, Colonia Village, Felicia Court, Cuesta del Mar, Fashion Park, Hill Street, Concord Drive, Althea Court and Fremont Way public housing sites plus the administrative offices. The contractor provides patrol services with marked patrol vehicles and unarmed security officers. Foot patrols are required behind buildings and dark areas where activity is noticed. All patrol visits are on a rotating basis, three times per day, seven nights a week from 10 pm to 6 am. The contractor provides daily reporting and works with the management team and the Oxnard Police Department to ensure the safety of residents. In the event of illegal activities, a full report including photos is provided to staff the next business day.

The contractor also enforces parking policies and contacts towing services to remove vehicles that are in an unsafe condition, parked in red fire lanes and in front of trash enclosures. Any maintenance problems in the community identified during patrolling are reported to the Housing Authority of the City of Oxnard. If the repair is an emergency item, such as broken windows, the officer contacts the on-call staff member immediately. Lastly, vacant units are inspected nightly to ensure there is no visible vandalism, forced entry or other related issues.

STRATEGIC PRIORITIES

This agenda item supports the Organizational Effectiveness strategy. The purpose of the Organizational Effectiveness strategy is to reinforce, stabilize, improve, and strengthen the organizational foundation of the City in order to build a modern, high-functioning City government that effectively and efficiently supports the operating departments in providing high-quality services and programs for our residents and businesses.

FINANCIAL IMPACT

This item does not impact any City fund. The funding for the Second Amendment to Agreement 9292-21-HO will be from the Fiscal Year 2023–2024 Low Rent Public Housing Operating Funds budget and Housing Choice Voucher Administrative Fees budget.

COMMITTEE OUTCOME

This item did not originate in Committee. This amendment is necessary for continued security services at public housing sites. The terms of the original agreement were considered by Board of Commissioners on September 7, 2021.

Prepared by: Emilio Ramirez, Housing Director

ATTACHMENTS

1. Agreement 9292-21-HO
2. First Amendment to Agreement 9292-21-HO
3. Second Amendment to Agreement 9292-21-HO

Agreement No. 9292-21-HO

AGREEMENT FOR TRADE SERVICES

THIS AGREEMENT FOR TRADE SERVICES (**"Agreement"**) is entered into in Ventura County, California, this 20th day of April, 2021, by and between the Oxnard Housing Authority (**"Authority"**) and Alltech Industries, Inc. (**"Vendor"**), subject to the following terms and conditions:

1. This Agreement is a firm-fixed price contract as defined by 24 CFR 85.36(4)(D) and the Department of Housing and Urban Development (HUD) Handbook 7460.8., rev. 2.

2. Vendor promises and agrees to furnish to Authority all labor, materials, tools, equipment, services, and incidental and customary work necessary to fully and adequately provide the Authority with Security Monitoring services (the **"Services"**). The Services are more particularly described in **Exhibit A** attached hereto and incorporated herein by reference. All Services shall be subject to, and performed in accordance with, this Agreement, the exhibits attached hereto and incorporated herein by reference, and all applicable local, state and federal laws, rules and regulations.

3. Vendor shall complete the Services within the term of this Agreement as specified in Section 4 below. Vendor shall be excused for delays resulting from causes beyond the reasonable control of Vendor as determined by the Authority. Authority agrees to amend the performance termination date whenever Vendor is delayed by action or inaction of Authority and Vendor promptly notifies the Authority through the Housing Director of such delays.

4. The initial term of this Agreement shall begin on September 13, 2021 and shall end on September 12, 2022 (the **"Initial Term"**), unless terminated sooner as provided in this Agreement. Authority, in its sole and absolute discretion, shall have the option to extend the Initial Term of the Agreement for up to three (3) additional one-year terms (each an **"Extension Term"**) through a written amendment signed by both Authority and Vendor at the rates provided in **Exhibit B**. In the event Authority desires to exercise its option to extend the Agreement for an Extension Term, Authority shall provide Vendor notice of its likely intention to extend the term of the Agreement at least ninety (90) days prior to expiration of the Initial Term or any Extension Term. In the event Authority and Vendor have not executed a written amendment extending the term of the Agreement at least thirty (30) days prior to expiration of the Initial Term or any Extension Term, Authority shall provide Vendor an additional notice of its likely intention to extend the term of the Agreement and issue to Vendor a formal written amendment of the Agreement term. Authority may terminate this Agreement at any time, with or

5. Vendor may not provide the Services under this Agreement until Authority has provided vendor with a written Notice to Proceed. Such notice shall specify the date the Services are to commence. No payments will be made to Vendor for any Services provided prior to the effective date of the Notice to Proceed.

6. Authority agrees to pay Vendor for the Services at the not to exceed rates provided in **Exhibit B** attached hereto and incorporated by this reference in full herein.

7.

   a. To the fullest extent permitted by law, Vendor shall (1) immediately defend; (2) indemnify; and (3) hold harmless Authority, its Commission, each member thereof, and its directors, officers, and employees (the **"Indemnified Party"**) from and against all liabilities regardless of nature, type, or cause, arising out of or resulting from or in connection with Vendor's performance of this Agreement or Vendor's failure to comply with any of its obligations contained in this Agreement. Liabilities subject to the duties to defend and indemnify include, without limitation, all claims, losses, damages, penalties, fines, and judgments; associated investigation and administrative expenses; defense costs, including but not limited to reasonable attorneys' fees; court costs; and costs of alternative dispute resolution. Vendor's obligation to indemnify applies unless it is adjudicated that any of the liabilities covered by this Section are the result of the sole active negligence or sole willful misconduct of the Indemnified Party.

   b. The duty to defend is a separate and distinct obligation from Vendor's duty to indemnify. Vendor shall be obligated to defend, in all legal, equitable, administrative, or special proceedings, with counsel approved by the Indemnified Party immediately upon tender to Vendor of the claim in any form or at any stage of an action or proceeding, whether or not liability is established. An allegation or determination of negligence or willful misconduct by the Indemnified Party shall not relieve Vendor from its separate and distinct obligation to defend the Indemnified Party. The obligation to defend extends through final judgment, including exhaustion of any appeals. The defense obligation includes the obligation to provide independent defense counsel if Vendor asserts that liability is caused in whole or in part by the negligence or willful misconduct of the Indemnified Party. If it is finally adjudicated that liability was caused by the sole active negligence or sole willful misconduct of the Indemnified Party, Vendor may submit a claim to Authority for reimbursement of reasonable attorneys' fees and defense costs.

   c. The review, acceptance or approval of Vendor's work or work product by the Indemnified Party shall not affect, relieve or reduce Vendor's indemnification or defense obligations. This Section shall survive completion of the Services or termination of this Agreement. The provisions

of this Section shall not be restricted by and do not affect the provisions of this Agreement relating to insurance.

8.

a. Vendor shall obtain and maintain during the performance of the Services the insurance coverages specified in Insurance Attachment **INS-4**, attached hereto and incorporated herein by reference, issued by a company satisfactory to the Administrative Services Manager, unless the Administrative Services Manager waives, in writing, the requirement that Vendor obtain and maintain such insurance coverages.

b. Vendor shall, prior to performance of the Services, file with the Administrative Services Manager evidence of insurance coverage as specified in Insurance Attachment **INS-4**. Evidence of insurance coverage shall be forwarded to the Administrative Services Manager, addressed as specified in Insurance Attachment **INS-4**.

c. Maintenance of insurance coverages by Vendor is a material element of this Agreement. Vendor's failure to maintain or renew insurance coverages or to provide evidence of renewal may be considered a material breach of this Agreement.

9. In performing the Services under this Agreement, Vendor is an independent contractor. Vendor and Vendor's agents, employees, subcontractors and other persons acting on Vendor's behalf are not officers or employees of Authority.

10. Vendor shall not, without the written consent of Authority's Contracting Officer, assign this Agreement, or any interest therein, or any money due thereunder.

11. In providing the Services under this Agreement, Vendor shall comply with all applicable laws, ordinances and regulations, including laws requiring the payment of prevailing wages. Before providing the Services under this Agreement, Vendor shall obtain all required licenses and permits, including a City of Oxnard business tax certificate.

12. The Services provided under this Agreement are paid totally or in part by funding provided by the Department of Housing and Urban Development (HUD) and as such, Contractor shall also fully and adequately comply with the provisions included in **Exhibit D** (General Conditions for Non-Construction Contracts) attached hereto and incorporated herein by this reference (**"Federal Requirements"**). In the event there is a conflict between the Federal Requirements and the terms of this Agreement and/or provisions of state law, the more stringent requirement shall control.

13. This Agreement may be amended only by a written document signed by both Authority and Vendor.

14. Any notices to Vendor may be delivered personally or by mail addressed to: Alltech Industries Inc., P.O. Box 4042, Montebello, CA 90640.

15. This Agreement constitutes the entire agreement of Authority and Vendor regarding the subject matter described herein and supersedes all prior communications, agreements and promises, either oral or written.

HOUSING AUTHORITY OF CITY OF OXNARD

Emilio Ramirez
Housing Director

VENDOR

Hilda Perez
President

APPROVED AS TO FORM:

7/6/21

Stephen M. Fischer
Housing General Counsel

APPROVED AS TO INSURANCE:

Rhonda Hodge
Housing Finance Officer

APPROVED AS TO COMPLIANCE:

Rhonda Hodge
Contract Administrator

EXHIBIT A

SCOPE OF WORK

All work performed by Contractor pursuant to this Agreement shall be performed according to industry standards as well as federal, State, local legal requirements, and to the satisfaction of the Authority. The Contractor shall provide security patrol services with marked patrol vehicles, utilizing unarmed guards.

Contractor's repeated failure, as determined by Authority, to provide satisfactory service shall result in termination of Contractor's contract for nonperformance. The Authority shall document the Contractor's failure to satisfactorily perform pursuant to this Agreement. Should the Contractor fail to satisfactorily perform the Services detailed in this Agreement, the Authority may prevent the Contract from bidding on services provided by the Authority.

These services shall include the following:

The Contractor shall provide patrol service with marked patrol vehicles, unarmed security officers, and provide the Authority with records detailing the number of visits contracted by Contractor. Contractor's officers shall provide heavy visibility and patrols (foot patrols are required behind buildings and dark areas where any activity is noticed) of all common areas of Housing Authority properties. For each location identified below, the Contractor shall provide a detailed report on the activities and incidents of each serviced day by no later than 10am the following morning.

Contractor shall provide coverage for all Authority sites as follows:

Three routine patrol visits, (including foot patrols) seven nights a week from 6 pm to 6 am. a week. All patrol visits shall be on a rotating random basis. Patrols should not be at the same time on any given evening or day of the week. Each patrol visit should include a foot patrol around community buildings and offices. Contractor shall notify the Oxnard Police Department immediately of any unlawful activity.

Services for the complexes shall at a minimum include:

Communication System

Contractor shall provide daily reports of all patrols and activities for each site within 24 hours of patrol noting condition of properties, any actions taken, etc. Also, in the event of illegal activities, a full report will be made available to property manager within 12 hours of event. Photos are also to be included in reports.

Contractor shall provide a toll free or local telephone contact number. Also, must maintain a data base for historical retrieval of information.

Order

Contractor shall provide a plan to combat trespassing, loitering and substance abuse.

Vehicles

Contractor shall provide a system to document, photograph, notify vehicle owner/residents, and keep track of problem vehicles and provide and issue citations for inoperable vehicles. Also, will contact OHA approved towing service and with approval from OHA remove previously identified inoperable vehicles or vehicles that are in an unsafe condition and/or parked in red fire lanes and in front of trash bins.

Servicing of Notices

Contractor shall provide, on an as-needed basis the service of notices. Service of notices shall be initiated within a minimum of 24 hours from receipt of request for service and submit copy of proof of service no later than 48 hours from date of service.

Maintenance Requests

Contractor shall, during their patrol, notate in writing any possible maintenance problems within the community to the property manager the following business day during normal business hours. Items to be included in this are broken windows, burned out lights, burned out security lighting, broken gates, etc. Emergency items should be called in to the On-Call Maintenance Person as needed.

Vacant Apartment Inspections

OHA will provide a list of vacant apartment/units for inspection to the contractor. The contractor shall conduct a **nightly** inspection of the vacant units. Contractor shall look for instances of vandalism, forced entry or other maintenance related issues and provide documentation to the property manager.

Service Locations

Services are to be provided at the following locations:

Service Sites:

Pleasant Valley 100-unit complex at Trevino Terrace and Squires Drive. Service Site also includes: Head Start Facility/2 standing vacant units and Administration, Maintenance and Shop/Warehouse at 5200 Squires Drive.	Colonia Village 70-unit complex located at Juanita & Marquita Streets, Gloria Court and Colonia Road. Service Site also includes Administration, Maintenance and Shop/Warehouse at 300 N Marquita. Also includes Administration Buildings located at 1470 Colonia Road and 1500 Camino Del Sol.
Felicia Court 100-unit complex at 1201-1363 Felicia Court. Service Site also includes vacant lots located on Carmelita, Dolores, and Eliza Courts.	

Scattered Sites:

640-666 Cuesta Del Mar (12 units)	2940-3026 Concord Drive (20 units)
230-257 Fashion Park (24 units)	1341-1387 Althea Court (20 units-8 units have been demolished
215-237 West Hill Street (12 units)	1330-1356 Fremont Way (12 units)

If additional sites are added at a future date or additional services are needed, a separate cost proposal will be obtained for the additional site or service.

EQUAL EMPLOYMENT OPPORTUNITIES

During the performance of this agreement, Contractor/Firm shall not discriminate against any employee or applicant for employment because of race, color, religion, sex, national origin, or handicap.

APPROPRIATE LICENSE

Contractor shall be licensed in accordance with provisions of the Business and Professions Code: Private Security Services Act, Article 3 Section 7582. Additionally, all guards must possess the appropriate license issued by the State of California BSIS and local law enforcement. Contractor shall detail in their proposal what their recordkeeping procedure is for ensuring that employees are current on all licensing requirements.

All Contractors/Firms will be required to obtain the required business license.

WAGES

Must comply with local California wage compliance laws.

SECURITY PERSONNEL

All security personnel shall meet the requirements established for private security services by the State of California Bureau of Security and Investigative Services. Contractor shall detail the training, background investigation process for their officers.

EXHIBIT "B"

Cost Structure

Alltech Industries Inc. will furnish Oxnard Housing Authority licensed and insured security officers. The hourly rates for this project are:

$24.28/hr. - Un-armed Vehicle Patrol Services

$106,055.04 yearly cost.

CERTIFICATE OF LIABILITY INSURANCE

DATE (MM/DD/YYYY): 7/21/2021

THIS CERTIFICATE IS ISSUED AS A MATTER OF INFORMATION ONLY AND CONFERS NO RIGHTS UPON THE CERTIFICATE HOLDER. THIS CERTIFICATE DOES NOT AFFIRMATIVELY OR NEGATIVELY AMEND, EXTEND OR ALTER THE COVERAGE AFFORDED BY THE POLICIES BELOW. THIS CERTIFICATE OF INSURANCE DOES NOT CONSTITUTE A CONTRACT BETWEEN THE ISSUING INSURER(S), AUTHORIZED REPRESENTATIVE OR PRODUCER, AND THE CERTIFICATE HOLDER.

IMPORTANT: If the certificate holder is an ADDITIONAL INSURED, the policy(ies) must have ADDITIONAL INSURED provisions or be endorsed. If SUBROGATION IS WAIVED, subject to the terms and conditions of the policy, certain policies may require an endorsement. A statement on this certificate does not confer rights to the certificate holder in lieu of such endorsement(s).

PRODUCER

THINK Ins & Fin Svs, LLC
101 W Mission Blvd
Suite 224
Pomona CA 91766

CONTACT NAME: Joseph Esparza
PHONE (A/C, No, Ext): 8554844654 FAX (A/C, No):
E-MAIL ADDRESS: joe@think-ins.com

INSURER(S) AFFORDING COVERAGE	NAIC #
INSURER A : INFINITY SELECT INS CO	20260
INSURER B : STATE COMPENSATION INSURANCE FUND	35076
INSURER C : ZURICH / STEADFAST INSURANCE CO	26387
INSURER D :	
INSURER E :	
INSURER F :	

INSURED

ALLTECH INDUSTRIES,INC.
16350 MOJAVE DR
VICTORVILLE CA 92395

COVERAGES **CERTIFICATE NUMBER:** **REVISION NUMBER:**

THIS IS TO CERTIFY THAT THE POLICIES OF INSURANCE LISTED BELOW HAVE BEEN ISSUED TO THE INSURED NAMED ABOVE FOR THE POLICY PERIOD INDICATED. NOTWITHSTANDING ANY REQUIREMENT, TERM OR CONDITION OF ANY CONTRACT OR OTHER DOCUMENT WITH RESPECT TO WHICH THIS CERTIFICATE MAY BE ISSUED OR MAY PERTAIN, THE INSURANCE AFFORDED BY THE POLICIES DESCRIBED HEREIN IS SUBJECT TO ALL THE TERMS, EXCLUSIONS AND CONDITIONS OF SUCH POLICIES. LIMITS SHOWN MAY HAVE BEEN REDUCED BY PAID CLAIMS.

INSR LTR	TYPE OF INSURANCE	ADDL INSD	SUBR WVD	POLICY NUMBER	POLICY EFF (MM/DD/YYYY)	POLICY EXP (MM/DD/YYYY)	LIMITS	
C	X COMMERCIAL GENERAL LIABILITY ☐ CLAIMS-MADE ☒ OCCUR X ERRORS & OMISSIONS X ASSAULT & BATTERY GEN'L AGGREGATE LIMIT APPLIES PER: X POLICY ☐ PRO-JECT ☐ LOC ☐ OTHER:	Y	Y	EOL0288581-03	03/20/2021	03/20/2022	EACH OCCURRENCE	$ 5,000,000
							DAMAGE TO RENTED PREMISES (Ea occurrence)	$ 100,000
							MED EXP (Any one person)	$ 5,000
							PERSONAL & ADV INJURY	$ 5,000,000
							GENERAL AGGREGATE	$ 5,000,000
							PRODUCTS - COMP/OP AGG	$ 5,000,000
								$
A	AUTOMOBILE LIABILITY ☐ ANY AUTO ☐ OWNED AUTOS ONLY ☒ SCHEDULED AUTOS X HIRED AUTOS ONLY ☒ NON-OWNED AUTOS ONLY	Y	Y	504581038526001	02/16/2021	02/16/2022	COMBINED SINGLE LIMIT (Ea accident)	$ 1,000,000
							BODILY INJURY (Per person)	$
							BODILY INJURY (Per accident)	$
							PROPERTY DAMAGE (Per accident)	$ 1,000,000
								$
	☐ UMBRELLA LIAB ☐ OCCUR ☐ EXCESS LIAB ☐ CLAIMS-MADE ☐ DED ☐ RETENTION $						EACH OCCURRENCE	$
							AGGREGATE	$
								$
B	WORKERS COMPENSATION AND EMPLOYERS' LIABILITY ANY PROPRIETOR/PARTNER/EXECUTIVE OFFICER/MEMBER EXCLUDED? (Mandatory in NH) Y / N: Y If yes, describe under DESCRIPTION OF OPERATIONS below	N / A	Y	9218054-2021	03/17/2021	03/17/2022	X PER STATUTE ☐ OTH-ER	
							E.L. EACH ACCIDENT	$ 1,000,000
							E.L. DISEASE - EA EMPLOYEE	$ 1,000,000
							E.L. DISEASE - POLICY LIMIT	$ 1,000,000
A	THIRD PARTY EMPLOYEE DISHONESTY	Y	Y	EOL0288581-02	03/20/2021	03/20/2022	EACH OCURRENCE	100,000

DESCRIPTION OF OPERATIONS / LOCATIONS / VEHICLES (ACORD 101, Additional Remarks Schedule, may be attached if more space is required)

PROJECT #: A-8293 ARMED SECURITY SVCS
"Ongoing Operations" Included on Additional Insured Endorsement.
"Primary Non-Contributory" Wording included in policy (see attached)

(SEE ATTACHED ACORD 101)

CERTIFICATE HOLDER

City of Oxnard Housing Authority Attn: (cont. in ACORD 101)
P.O. Box 100085 - OX
Duluth GA 90096

CANCELLATION

SHOULD ANY OF THE ABOVE DESCRIBED POLICIES BE CANCELLED BEFORE THE EXPIRATION DATE THEREOF, NOTICE WILL BE DELIVERED IN ACCORDANCE WITH THE POLICY PROVISIONS.

AUTHORIZED REPRESENTATIVE

Joseph Esparza

© 1988-2015 ACORD CORPORATION. All rights reserved.

AGENCY CUSTOMER ID: _____

LOC #: _____

ADDITIONAL REMARKS SCHEDULE

AGENCY		NAMED INSURED
THINK Ins & Fin Svs, LLC		ALLTECH INDUSTRIES,INC.
POLICY NUMBER		
CARRIER	NAIC CODE	EFFECTIVE DATE:

ADDITIONAL REMARKS

THIS ADDITIONAL REMARKS FORM IS A SCHEDULE TO ACORD FORM,

FORM NUMBER: 25 **FORM TITLE:** Certificate Of Liability Insurance

**Certificate Holder Name:

City of Oxnard Housing Authority Attn: Insurance Compliance Reference No. A-8293 Armed Security Svcs

© 2008 ACORD CORPORATION. All rights reserved.

The ACORD name and logo are registered marks of ACORD

Agreement No. 9292-21-HO

FIRST AMENDMENT TO AGREEMENT FOR TRADE SERVICES

This First Amendment ("Amendment") to the Agreement for Trade Services Contract ("Agreement") is made and entered into in the County of Ventura, State of California, this 11th day of August, 2022 by and between the Oxnard Housing ("OHA"), and Alltech Industries, Inc. ("Vendor"). This First Amendment amends the Agreement entered into on April 20, 2021, by OHA and Alltech Industries, Inc.

OHA and Vendor agree as follows:

1. The Contract expiration date is changed from September 12, 2022 to September 30, 2023.

2. The hourly rate will increase from $24.28 to $31.77.

3. The routine patrol visits will decrease from 12 hours per day to 8 hours per day.

4. As so amended, the Agreement remains in full force and effect.

HOUSING AUTHORITY
OF CITY OF OXNARD

Emilio Ramirez
Housing Director

ALLTECH INDUSTRIES, INC.

Hilda Perez 08/18/2022
Hilda Perez
President

APPROVED AS TO COMPLIANCE:

Rhonda Hodge
Rhonda Hodge
Contract Administrator

Agreement No. 9292-21-HO

SECOND AMENDMENT TO AGREEMENT FOR TRADE SERVICES

This Second Amendment ("Amendment") to the Agreement for Trade Services Agreement ("Agreement") is made and entered into in the County of Ventura, State of California, this 19th day of September, 2023 by and between the Housing Authority of the City of Oxnard, and Alltech Industries, Inc. This Second Amendment amends the Agreement entered into on April 20, 2021, by the Housing Authority of the City of Oxnard and Alltech Industries, Inc. The agreement had been previously amended by the First Amendment entered into on August 11, 2022.

The Housing Authority of the City of Oxnard and Alltech Industries, Inc. agree as follows:

1. In Section 4 of the Agreement, the expiration date is hereby amended from "September 30, 2023" to "September 30, 2024."
2. In Exhibit B of the Agreement, the Un-armed Vehicle Patrol Services Hourly Rate is hereby amended from "$31.77" to "$33.99."
3. In Exhibit B of the Agreement, the yearly cost is hereby amended from "$106, 055.04" to "$99,250.80."
4. In Exhibit A of the Agreement, the first sentence of the fourth paragraph is deleted and replaced with, "36 routine patrol visits, (including foot patrols) seven nights a week from 10 p.m. to 6 a.m."
5. As so amended, the Agreement remains in full force and effect.

The parties agree that this Agreement may be transmitted and signed by electronic or digital means by either/any or both/all Parties and that such signatures shall have the same force and effect as original signatures, in accordance with California Government Code Section 16.5 and California Civil Code Section 1633.7.

HOUSING AUTHORITY OF THE CITY OF OXNARD	ALLTECH INDUSTRIES, INC.
Emilio Ramirez Housing Director	Hilda Perez President
APPROVED AS TO COMPLIANCE	APPROVED AS TO FORM
Rhonda Hodge Contract Administrator	Stephen M. Fischer Housing General Counsel

CITY COUNCIL AGENDA REPORT

INFORMATION/CONSENT AGENDA
AGENDA ITEM NO. L.3

DATE: September 19, 2023

TO: City Council

FROM: Stephen Fischer, City Attorney, (805) 385-7483, stephen.fischer@oxnard.org

SUBJECT: Omnibus City Code Update

RECOMMENDATION

That the City Council adopt an ordinance titled:

"AN ORDINANCE OF THE CITY COUNCIL OF THE CITY OF OXNARD AMENDING VARIOUS SECTIONS OF THE OXNARD CITY CODE TO ADDRESS CHANGES IN STATE LAW, CORRECT ERRORS, AND UPDATE GENDER-NEUTRAL REFERENCES."

(The Finance & Governance Committee approved 3-0 on July 25, 2023)

BACKGROUND

Over the years, the OCC has been amended many times to address clerical errors and updates to legal citations. The ordinance before the City Council proposes non-substantive updates to address changes in state law, corrects minor errors, and updates gender-neutral references.

The proposed changes to the OCC include, but are not limited to, the following:

1. Updating the names of the City Council committees;
2. Clarifying that commissioners of the City's CAGs are appointed by the Mayor with the approval of the City Council;
3. Changing references from Rosenberg's Rules of Order to Robert's Rules of Order;
4. Updating the code to include changes in City employee titles (Chief Assistant City Attorney, Chief Financial Officer);
5. Updating gender-neutral language;
6. Modifying the number of days for which the City Council must reconsider a local emergency from 30 days to 60 days;
7. Updating state law references; and
8. Modifying chapter titles.

On September 5, 2023, the City Council approved the introduction and first reading of the ordinance by a vote of 7-0.

The City Attorney's Office intends to update the OCC as needed periodically.

STRATEGIC PRIORITIES

This agenda item supports the Organizational Effectiveness strategy. The purpose of the Organizational Effectiveness strategy is to reinforce, stabilize, improve, and strengthen the organizational foundation of the City in order to build a modern, high-functioning City government that effectively and efficiently supports the operating departments in providing high-quality services and programs for our residents and businesses.

FINANCIAL IMPACT

There is no financial impact.

COMMITTEE OUTCOME

The Finance & Governance Committee approved 3-0 on July 25, 2023 to approve the staff recommendation and to forward the item for Council approval.

Prepared by: Jason Zaragoza, Deputy City Attorney

ATTACHMENTS

1. Clean_Omnibus City Code Update Ordinance.dl
2. Redline_Omnibus City Code Update Ordinance

CITY COUNCIL OF THE CITY OF OXNARD
ORDINANCE NO. 3031

AN ORDINANCE OF THE CITY COUNCIL OF THE CITY OF OXNARD AMENDING VARIOUS SECTIONS OF THE OXNARD CITY CODE TO ADDRESS CHANGES IN STATE LAW, CORRECT ERRORS, AND UPDATE GENDER-NEUTRAL REFERENCES

WHEREAS, the Oxnard City Code ("OCC") needs to be reviewed and amended periodically to address changes in state law, and correct clerical errors; and

WHEREAS, this omnibus code cleanup is not intended to be a comprehensive or substantive update to the OCC; and

WHEREAS, this omnibus code cleanup is meant to make relatively minor changes to maintain the OCC.

NOW, THEREFORE, THE CITY COUNCIL OF THE CITY OF OXNARD DOES ORDAIN AS FOLLOWS:

Part 1. Section 1-20 of the Oxnard City Code is hereby amended to read as follows:

"The city council hereby declares that in order to ensure that the residents of the city are given an administrative review opportunity, the following hearing procedures, sections 1-21 through 1-25, are adopted which shall be complied with prior to termination of utility services by the city for nonpayment of bills by customers."

Part 2. Section 2-1.1(A) of the Oxnard City Code is hereby amended to read as follows:

"(A) The following city council committees shall consist of three city council members per committee, appointed by the mayor and approved by at least four city councilmembers:

(1) The finance and governance committee;
(2) The public works and transportation committee;
(3) The community services, public safety, housing & economic development committee."

Part 3. Section 2-36(C) of the Oxnard City Code is hereby amended to read as follows:

"(C) A commissioner may be reappointed by the mayor, with the approval of the city council. However, no member of the commission may be appointed to serve more than two consecutive terms. This provision applies prospectively to all commissions. If a member serves less than half of a term, that member shall be eligible to serve two full consecutive terms thereafter."

Part 4. Section 2-39(A) of the Oxnard City Code is hereby amended to read as follows:

"(A) Each commission shall follow Robert's Rules of Order."

Part 5. Section 2-96(A) of the Oxnard City Code is hereby amended to read as follows:

"(A) The commission shall consist of seven members. Members of the commission shall serve and may be removed and replaced at the pleasure of the city council. Members shall serve without compensation, shall reside in the city, and shall be at least 18 years of age."

Part 6. Section 2-136 of the Oxnard City Code is hereby amended to read as follows:

(B) The terms used in subsection (A) shall be defined as follows:

(1) "City employee designated herein" shall mean any city officer or employee in any of the following classifications:

(a) City council member;
(b) City manager;
(c) Assistant city manager;
(d) Deputy city manager;
(e) City attorney;
(f) Assistant city attorney;
(g) Chief assistant city attorney;
(h) Deputy city attorney;
(i) Development services director;
(j) Community development director;
(k) City planner;
(l) Principal planner;
(m) Building official;
(n) Plan check engineer;
(o) Supervising building inspector;
(p) Code enforcement official;
(q) Chief financial officer;
(r) Housing director;
(s) Public works director.

Part 7. Section 2-177 of the Oxnard City Code is hereby amended to read as follows:

"The chief financial officer shall file with the city clerk a bond covering the faithful performance of the chief financial officer's duties, in the penal sum of not less than $20,000. The bond shall conform to the provisions of Chapter 3, Division 4, Title 1 of the Cal. Gov't Code. The premium on the bond shall be paid by the city."

Part 8. Section 2-180 of the Oxnard City Code is hereby amended to read as follows:

"After the end of each fiscal year, the chief financial officer shall cause an audit of the city's financial reports for the previous fiscal year to be prepared promptly by a certified public accountant. Within a reasonable time, the chief financial officer shall present the audit to the city council at a public meeting."

Part 9. Section 2-184 of the Oxnard City Code is hereby amended to read as follows:

"The chief financial officer shall prepare a written form of demand and proposed check for each approved invoice and claim. Supporting documents such as the purchase order, and invoice or claim for payment shall be attached thereto. Demands shall be individually audited by the chief financial officer or designee, who shall certify as to the accuracy of each demand and the availability of funds for payment thereof. Such demands may be in the form of check-warrants and when approved by all officers as required by this code, shall be delivered to the assistant city treasurer. The assistant city treasurer shall subscribe a direction to the depository of funds to pay the funds to the order of the payee, which action shall convert the warrant, or demand, to a bona fide check."

Part 10. Section 2-186 of the Oxnard City Code is hereby amended to read as follows:

"SEC. 2-186. APPROVAL OF WARRANTS BY DIRECTOR OF FINANCE; REGISTERED WARRANTS; PAYMENT OF BONDS AND COUPONS.

(A) All demands approved by the proper board, commission or officers shall be presented to the city's chief financial officer, who shall examine the same; and if the amount thereof is legally due and there remains on the books an unexhausted balance or an appropriation against which the same may be charged, the chief financial officer shall approve such demand and draw and sign the warrant on the city treasury therefor, payable out of the proper fund.

(B) (1) Objections of the chief financial officer to any demand may be overruled by the city council, and the chief financial officer shall thereupon draw the warrant as directed by the city council.

(2) Such warrants, when presented to the assistant city treasurer, shall be paid by the chief financial officer out of the fund therein designated if there be sufficient money in such fund for that purpose.

(3) A warrant not paid for lack of funds shall be registered, and all registered warrants shall be paid in the order of registration when funds are available therefor.

(C) The chief financial officer shall draw warrants for payment of municipal or other bonds payable out of funds in the treasury upon presentation and surrender of the proper bonds and coupons, without approval of any body or officer."

Part 11. Section 2-180(B) of the Oxnard City Code is hereby amended to read as follows:

"(B) The department director or designee may authorize payment of a claim for refund of a fee or charge if the department director or designee determines that the fee or charge was overpaid or that the service, license or permit for which the fee or charge was paid was not received or used."

Part 12. Section 2-212(A) of the Oxnard City Code is hereby amended to read as follows:

"(A) The city council hereby adopts Oxnard police department Policy Manual Section 708 (the "policy") which shall govern the use of military equipment by the Oxnard police department.

The policy may be amended by the police chief or the police chief's designee, subject to city council approval."

Part 13. Section 2-224(B) of the Oxnard City Code is hereby amended to read as follows:

"(B) A description is meaningful if it is sufficiently clear and specific to alert a person of average intelligence and education whose interests are affected by the item that the person may have reason to attend the meeting or seek more information on the item. The description should be brief, concise and written in plain, easily understood English."

Part 14. Section 3-3(B) of the Oxnard City Code is hereby amended to read as follows:

"(B) The provisions of the competitive service system shall apply to all appointive officers and employees. Members of the noncompetitive service shall include all the elected officers, the city manager, assistant city manager, deputy city manager, the city attorney, chief assistant city attorney, assistant city attorney, deputy city attorney, department directors, all appointees on boards, commissions, and committees, all part-time employees, all employees paid on an hourly or per diem wage, and seasonal employees."

Part 15. Section 3-36 of the Oxnard City Code is hereby amended to read as follows:

"The purpose of this article is to implement Cal. Gov't Code, Sections 3500 *et seq.*, captioned "Local Public Employee Organizations," by providing orderly procedures for the administration of employer-employee relations between the city and its employee organizations and for resolving disputes regarding wages, hours and other terms and conditions of employment."

Part 16. Section 3-62 of the Oxnard City Code is hereby amended to read as follows:

"The purpose of this article is to implement Cal. Gov't Code, Sections 3500 *et seq.*, captioned "Local Public Employee Organizations," by providing orderly procedures for the administration of employer-employee relations between the city and its employee organizations, except the police and fire appropriate units, and for resolving disputes regarding wages, hours and other terms and conditions of employment of "clerical," "blue collar" and "miscellaneous" employees."

Part 17. Section 5-2(A)(4) of the Oxnard City Code is hereby amended to read as follows:

"(4) Threatening behavior by an animal toward any person that occurs in such circumstances as to cause such person reasonably to fear for the person's physical safety unless the person who, at the time of the animal's threatening behavior, was either (a) provoking the animal, or (b) willfully trespassing or committing some other tort upon the premises occupied by the owner or keeper of the animal"

Part 18. Section 6-2(D) of the Oxnard City Code is hereby amended to read as follows:

"(D) EMERGENCY - Local emergency, state of emergency or state of war emergency, depending on the context."

Part 19. Section 6-2(I) of the Oxnard City Code is hereby amended to read as follows:

"(I) LOCAL EMERGENCY - The actual or threatened existence of conditions of disaster or of extreme peril to the safely of persons and property within the city caused by such conditions as air pollution, fire, flood, tsunami, storm, pandemic, epidemic, riot, drought, sudden and severe energy shortage, plant or animal infestation or disease, the warning by the governor of the State of an earthquake or volcanic eruption, an earthquake, or other conditions, including conditions resulting from war or imminent threat of war, but not including conditions resulting from a labor controversy, which conditions are or are likely to be beyond the control of the services, personnel, equipment, and facilities of the city, requiring the combined forces of other public agencies to combat."

Part 20. Section 6-4 of the Oxnard City Code is hereby amended to read as follows:

"After a local emergency is proclaimed by the city council or the director, the city council shall review, at least every 60 days until the local emergency is terminated, the need for continuing the local emergency and shall proclaim the termination of the local emergency at the earliest possible date that conditions warrant."

Part 21. Section 6-8(A)(2) of the Oxnard City Code is hereby amended to follows:

"(2) Do any act forbidden by any rule, regulation, order or directive issued pursuant to this chapter, including violation of any curfew so established. However, an affirmative defense to violation of such a curfew shall be that the person charged was traveling to or from work or school, was un-housed, or was seeking medical treatment."

Part 22. Section 7-9(B) of the Oxnard City Code is hereby amended to follows:

"(B) The property owner shall first present evidence to justify the property owner's failure to comply with the notice to abate nuisance. Thereafter, a representative of the city may present evidence. The burden of proof to justify noncompliance with the notice to abate nuisance is on the property owner."

Part 23. Section 7-72(E) of the Oxnard City Code is hereby amended to follows:

"(E) In the sidewalk abutting the minor's residence or abutting the residence of a next-door neighbor if the neighbor did not complain to the city about the minor's presence;"

Part 24. Section 7-86(A) of the Oxnard City Code is hereby amended to follows:

"(A) It shall be unlawful for any person to possess any adhesive sticker, etching tool, indelible marker, paint stick, or graffiti stick while in or upon any public facility, park, playground, swimming pool, beach, recreational facility, or other public building owned or operated by the

city where signs forbidding such possession without valid authorization are displayed in a reasonable location or locations."

Part 25. Section 11-45(B) of the Oxnard City Code is hereby amended to read as follows:

"(B) A person, institution, or organization exempted by section 11-9 from some of the requirements of this chapter is not exempt from the requirement to provide the collector with a current public health permit issued to the person, institution or organization by the county pursuant to Cal. Health and Safety Code, Section 114387. The permit shall be presented to the collector before the person, institution or organization engages in peddling food anywhere in the city."

Part 26. Section 11-70.1(D) of the Oxnard City Code is hereby amended to read as follows:

"(D) A person whose request to submit an application without paying a fee or surcharge is denied by the alarm administrator may file with the alarm administrator a notice of appeal, stating the reasons why the applicant is entitled to file such application without paying the fee or surcharge. The notice of appeal shall be accompanied by the appeal fee set by resolution of the city council. The appeal procedure is provided in section 11-70.4, excluding subsection (D) thereof. Instead of the procedure provided in subsection 11-70.4(D), the appellant shall first present evidence, by written statement or otherwise, that the applicant is entitled to exemption from the fee or surcharge, and the alarm administrator may then present evidence that the appellant is not entitled to exemption."

Part 27. Section 11-381(A) of the Oxnard City Code is hereby amended to read as follows:

"(A) In addition to any other penalty authorized by law, a tobacco retailer permit may be suspended or revoked by the collector, after notice and an opportunity to be heard as set forth in chapter 1, article V of this code, for failure of the permittee, or any of the permittee's agents or employees, to comply with applicable local, State, or federal rules, regulations, or laws concerning tobacco retailing, based on matters occurring after the permit is issued or on matters not considered at the time of issuance of the permit that would have authorized denial of the permit or the imposition of conditions on the permit."

Part 28. The Title of Chapter 13 of the Oxnard City Code is hereby amended to read as follows:

"**CHAPTER 13: ASSESSMENTS, FEES AND TAXES**"

Part 29. Section 14-106(J) of the Oxnard City Code is hereby amended to read as follows:

"(J) A responsible person may refuse consent to an inspection conducted by the code official. If consent is refused, the code official may seek an administrative inspection warrant pursuant to Cal. Code of Civil Procedure, Sections 1822.50 *et seq.*"

Part 30. Section 16-10(A)(69) is hereby added to the Oxnard City Code to read as follows:

"(69) HOSPITAL - A health facility having a duly constituted governing body with overall administrative and professional responsibility and having an organized medical staff which provides 24-hour inpatient care including one or more of the following basic services: medical, nursing, surgical, anesthesia, laboratory, radiology, pharmacy, dietary services, or psychiatric care and treatment."

Part 31. Section 15-11(B) of the Oxnard City Code is hereby amended to read as follows:

"(B) Neither a tentative parcel map nor parcel map shall be required in the situations described in Cal. Gov't Code, Section 66428, Subsection (a), Subdivisions (1) and (2); provided, however, that a parcel map shall be required in a situation described in Cal. Gov't Code, Section 66428, Subsection (a), Subdivision (2) if the decision-making body finds, based on facts in the record, that public policy necessitates a parcel map."

Part 32. Section 15-267(D) of the Oxnard City Code is hereby amended to read as follows:

"(D) If any lot to be merged was not created in compliance with applicable laws and ordinances in effect at the time of the lot's creation, the application shall be heard by the commission, which may impose on the granting of the application whatever conditions the commission could impose on the issuance of a conditional certificate of compliance pursuant to Cal. Gov't Code, Section 66499.36 Subdivision (B) with respect to such illegally created lot. If one or more of the lots to be merged is nonconforming at the time of application, the application may be approved if the resulting parcel and all structures and parking spaces thereon comply with the general plan, with any applicable specific plan, and with the minimum area, width, frontage and yard requirements of the zone in which the parcel is located."

Part 33. Severability. If any section, subsection, sentence, clause, phrase, part or portion of this Ordinance is for any reason held to be invalid or unconstitutional by any court of competent jurisdiction, such decision will not affect the validity of the remaining portions of this Ordinance. The City Council declares that it would have adopted this Ordinance and each section, subsection, sentence, clause, phrase, part or portion thereof, irrespective of the fact that any one of more section, subsections, sentences, clauses, phrases, parts or portions be declared invalid or unconstitutional.

Part 34. Pursuant to Cal. Gov. Code Section 36933(c)(1), the City Attorney was designated to prepare, and the City Clerk published, a summary of this ordinance, and a certified copy of the ordinance was posted in the Office of the City Clerk a minimum of five days before the City Council's adoption of the ordinance.

Part 35. Within fifteen days after passage, the City Clerk shall cause this ordinance to be published one time in a newspaper of general circulation, published and circulated in the City. Ordinance No. 3031 was first read on September 5, 2023, and finally adopted on September 19, 2023, to become effective thirty days thereafter.

AYES:

NOES:

ABSENT:

ABSTAIN:

_____
John C. Zaragoza, Mayor

ATTEST:

_____
Rose Chaparro, City Clerk

APPROVED AS TO FORM:

_____
Stephen M. Fischer, City Attorney

CITY COUNCIL OF THE CITY OF OXNARD
ORDINANCE NO.

AN ORDINANCE OF THE CITY COUNCIL OF THE CITY OF OXNARD AMENDING VARIOUS SECTIONS OF THE OXNARD CITY CODE TO ADDRESS CHANGES IN STATE LAW, CORRECT ERRORS, AND UPDATE GENDER-NEUTRAL REFERENCES

WHEREAS, the Oxnard City Code ("OCC") needs to be reviewed and amended periodically to address changes in state law, and correct clerical errors; and

WHEREAS, this omnibus code cleanup is not intended to be a comprehensive or substantive update to the OCC; and

WHEREAS, this omnibus code cleanup is meant to make relatively minor changes to maintain the OCC.

NOW, THEREFORE, THE CITY COUNCIL OF THE CITY OF OXNARD DOES ORDAIN AS FOLLOWS:

Part 1. Section 1-20 of the Oxnard City Code is hereby amended to read as follows:

"The city council hereby declares that in order to ensure that the ~~citizens~~ residents of the city are given an administrative review opportunity, the following hearing procedures, sections 1-21 through 1-25, are adopted which shall be complied with prior to termination of utility services by the city for nonpayment of bills by customers."

Part 2. Section 2-1.1(A) of the Oxnard City Code is hereby amended to read as follows:

"(A) The following city council committees shall consist of three city council members per committee, appointed by the mayor and approved by at least four city councilmembers:

(1) The finance and governance committee;
(2) The public works and transportation committee;
(3) ~~The public safety committee~~The community services, public safety, housing & economic development committee.~~;~~"
~~(4) The housing and economic development committee; and~~
~~(5) The community services committee."~~

Part 3. Section 2-36(C) of the Oxnard City Code is hereby amended to read as follows:

"(C) A commissioner may be reappointed by the mayor, with the approval of the city council. However, no member of the commission may be appointed to serve more than two consecutive terms. This provision applies prospectively to all commissions. If a member serves less than half of a term, that member shall be eligible to serve two full consecutive terms thereafter."

Part 4. Section 2-39(A) of the Oxnard City Code is hereby amended to read as follows:

"(A) Each commission shall follow ~~Rosenberg's~~ Robert's Rules of Order."

Part 5. Section 2-96(A) of the Oxnard City Code is hereby amended to read as follows:

"(A) The commission shall consist of seven members ~~appointed by the city council~~. Members of the commission shall serve and may be removed and replaced at the pleasure of the city council. Members shall serve without compensation, shall reside in the city, and shall be at least 18 years of age."

Part 6. Section 2-136 of the Oxnard City Code is hereby amended to read as follows:

(B) The terms used in subsection (A) shall be defined as follows:

(1) "City employee designated herein" shall mean any city officer or employee in any of the following classifications:

(a) City council member;
(b) City manager;
(c) Assistant city manager;
(d) Deputy city manager;
(e) City attorney;
(f) Assistant city attorney;
(g) Chief assistant city attorney;
(~~g~~h) Deputy city attorney;
(~~h~~i) Development services director;
(~~i~~j) Community development director;
(~~j~~k) City planner;
(~~k~~l) Principal planner;
(~~l~~m) Building official;
(~~m~~n) Plan check engineer;
(~~n~~o) Supervising building inspector;
(~~o~~p) Code enforcement official;
(~~p~~q) ~~Finance and management services director~~Chief financial officer;
(~~q~~r) Housing director;
(~~r~~s) Public works director.

Part 7. Section 2-177 of the Oxnard City Code is hereby amended to read as follows:

"The ~~director of finance~~chief financial officer shall file with the city clerk a bond covering the faithful performance of ~~his/her~~the chief financial officer's duties, in the penal sum of not less than $20,000. The bond shall conform to the provisions of Chapter 3, Division 4, Title 1 of the Cal. Gov't Code. The premium on the bond shall be paid by the city."

Part 8. Section 2-180 of the Oxnard City Code is hereby amended to read as follows:

"After the end of each fiscal year, the ~~director of finance~~chief financial officer shall cause an audit of the city's financial reports for the previous fiscal year to be prepared promptly by a

certified public accountant. Within a reasonable time, the ~~director of finance~~chief financial officer shall present the audit to the city council at a public meeting."

Part 9. Section 2-184 of the Oxnard City Code is hereby amended to read as follows:

"The ~~finance director~~chief financial officer shall prepare a written form of demand and proposed check for each approved invoice and claim. Supporting documents such as the purchase order, and invoice or claim for payment shall be attached thereto. Demands shall be individually audited by the ~~finance director~~chief financial officer or designee, who shall certify as to the accuracy of each demand and the availability of funds for payment thereof. Such demands may be in the form of check-warrants and when approved by all officers as required by this code, shall be delivered to the assistant city treasurer. The assistant city treasurer shall subscribe a direction to the depository of funds to pay the funds to the order of the payee, which action shall convert the warrant, or demand, to a bona fide check."

Part 10. Section 2-186 of the Oxnard City Code is hereby amended to read as follows:

"SEC. 2-186. APPROVAL OF WARRANTS BY DIRECTOR OF FINANCE; REGISTERED WARRANTS; PAYMENT OF BONDS AND COUPONS.

(A) All demands approved by the proper board, commission or officers shall be presented to the city's ~~finance director~~chief financial officer, who shall examine the same; and if the amount thereof is legally due and there remains on the books an unexhausted balance or an appropriation against which the same may be charged, the ~~finance director~~chief financial officer shall approve such demand and draw and sign the warrant on the city treasury therefor, payable out of the proper fund.

(B) (1) Objections of the ~~finance director~~chief financial officer to any demand may be overruled by the city council, and the ~~finance director~~chief financial officer shall thereupon draw the warrant as directed by the city council.

(2) Such warrants, when presented to the assistant city treasurer, shall be paid by the ~~finance director~~chief financial officer out of the fund therein designated if there be sufficient money in such fund for that purpose.

(3) A warrant not paid for lack of funds shall be registered, and all registered warrants shall be paid in the order of registration when funds are available therefor.

(C) The ~~finance director~~chief financial officer shall draw warrants for payment of municipal or other bonds payable out of funds in the treasury upon presentation and surrender of the proper bonds and coupons, without approval of any body or officer."

Part 11. Section 2-180(B) of the Oxnard City Code is hereby amended to read as follows:

"(B) The department director or designee may authorize payment of a claim for refund of a fee or charge if ~~he/she~~the department director or designee determines that the fee or charge was overpaid or that the service, license or permit for which the fee or charge was paid was not received or used."

Part 12. Section 2-212(A) of the Oxnard City Code is hereby amended to read as follows:

"(A) The city council hereby adopts Oxnard police department Policy Manual Section 708 (the "policy") which shall govern the use of military equipment by the Oxnard police department. The policy may be amended by the police chief or ~~his/her~~ the police chief's designee, subject to city council approval."

Part 13. Section 2-224(B) of the Oxnard City Code is hereby amended to read as follows:

"(B) A description is meaningful if it is sufficiently clear and specific to alert a person of average intelligence and education whose interests are affected by the item that ~~he or she~~ the person may have reason to attend the meeting or seek more information on the item. The description should be brief, concise and written in plain, easily understood English."

Part 14. Section 3-3(B) of the Oxnard City Code is hereby amended to read as follows:

"(B) The provisions of the competitive service system shall apply to all appointive officers and employees. Members of the noncompetitive service shall include all the elected officers, the city manager, assistant city manager, deputy city manager, the city attorney, chief assistant city attorney, assistant city attorney, deputy city attorney, department directors, all appointees on boards, commissions, and committees, all part-time employees, all employees paid on an hourly or per diem wage, and seasonal employees."

Part 15. Section 3-36 of the Oxnard City Code is hereby amended to read as follows:

"The purpose of this article is to implement Cal. Gov't Code, Sections 3500 *et seq.*, captioned "~~Public Employee Organization~~Local Public Employee Organizations," by providing orderly procedures for the administration of employer-employee relations between the city and its employee organizations and for resolving disputes regarding wages, hours and other terms and conditions of employment."

Part 16. Section 3-62 of the Oxnard City Code is hereby amended to read as follows:

"The purpose of this article is to implement Cal. Gov't Code, Sections 3500 *et seq.*, captioned "~~Public Employee Organization~~Local Public Employee Organizations," by providing orderly procedures for the administration of employer-employee relations between the city and its employee organizations, except the police and fire appropriate units, and for resolving disputes regarding wages, hours and other terms and conditions of employment of "clerical," "blue collar" and "miscellaneous" employees."

Part 17. Section 5-2(A)(4) of the Oxnard City Code is hereby amended to read as follows:

"(4) Threatening behavior by an animal toward any person that occurs in such circumstances as to cause such person reasonably to fear for ~~his/her~~the person's physical safety unless the person who, at the time of the animal's threatening behavior, was either (a) provoking the animal, or (b) willfully trespassing or committing some other tort upon the premises occupied by the owner or keeper of the animal"

Part 18. Section 6-2(D) of the Oxnard City Code is hereby amended to read as follows:

"(D) EMERGENCY - Local emergency, state of emergency or state of war emergency, depending ~~of~~ on the context."

Part 19. Section 6-2(I) of the Oxnard City Code is hereby amended to read as follows:

"(I) LOCAL EMERGENCY - The actual or threatened existence of conditions of disaster or of extreme peril to the safely of persons and property within the city caused by such conditions as air pollution, fire, flood, tsunami, storm, pandemic, epidemic, riot, drought, sudden and severe energy shortage, plant or animal infestation or disease, the warning by the governor of the State of an earthquake or volcanic eruption, an earthquake, or other conditions, including conditions resulting from war or imminent threat of war, but not including conditions resulting from a labor controversy, which conditions are or are likely to be beyond the control of the services, personnel, equipment, and facilities of the city, requiring the combined forces of other public agencies to combat."

Part 20. Section 6-4 of the Oxnard City Code is hereby amended to read as follows:

"After a local emergency is proclaimed by the city council or the director, the city council shall review, at least every ~~30~~ 60 days until the local emergency is terminated, the need for continuing the local emergency and shall proclaim the termination of the local emergency at the earliest possible date that conditions warrant."

Part 21. Section 6-8(A)(2) of the Oxnard City Code is hereby amended to follows:

"(2) Do any act forbidden by any rule, regulation, order or directive issued pursuant to this chapter, including violation of any curfew so established. However, an affirmative defense to violation of such a curfew shall be that the person charged was traveling to or from work or school, was un-housed ~~homeless~~, or was seeking medical treatment."

Part 22. Section 7-9(B) of the Oxnard City Code is hereby amended to follows:

"(B) The property owner shall first present evidence to justify ~~his or her~~the property owner's failure to comply with the notice to abate nuisance. Thereafter, a representative of the city may present evidence. The burden of proof to justify noncompliance with the notice to abate nuisance is on the property owner."

Part 23. Section 7-72(E) of the Oxnard City Code is hereby amended to follows:

"(E) In the sidewalk abutting ~~his or her~~the minor's residence or abutting the residence of a next-door neighbor if the neighbor did not complain to the city about the minor's presence;"

Part 24. Section 7-86(A) of the Oxnard City Code is hereby amended to follows:

"(A) It shall be unlawful for any person to ~~have in his or her possession~~ possess any adhesive sticker, etching tool, indelible marker, paint stick, or graffiti stick while in or upon any public facility, park, playground, swimming pool, beach, recreational facility, or other public building owned or operated by the city where signs forbidding such possession without valid authorization are displayed in a reasonable location or locations."

Part 25. Section 11-45(B) of the Oxnard City Code is hereby amended to read as follows:

"(B) A person, institution, or organization exempted by section 11-9 from some of the requirements of this chapter is not exempt from the requirement to provide the collector with a current public health permit issued to the person, institution or organization by the county pursuant to Cal. Health and Safety Code, Section ~~113923~~114387. The permit shall be presented to the collector before the person, institution or organization engages in peddling food anywhere in the city."

Part 26. Section 11-70.1(D) of the Oxnard City Code is hereby amended to read as follows:

"(D) A person whose request to submit an application without paying a fee or surcharge is denied by the alarm administrator may file with the alarm administrator a notice of appeal, stating the reasons why the applicant is entitled to file such application without paying the fee or surcharge. The notice of appeal shall be accompanied by the appeal fee set by resolution of the city council. The appeal procedure is provided in section 11-70.4, excluding subsection (D) thereof. Instead of the procedure provided in subsection 11-70.4(D), the appellant shall first present evidence, by written statement or otherwise, that ~~he or she~~the applicant is entitled to exemption from the fee or surcharge, and the alarm administrator may then present evidence that the appellant is not entitled to exemption."

Part 27. Section 11-381(A) of the Oxnard City Code is hereby amended to read as follows:

"(A) In addition to any other penalty authorized by law, a tobacco retailer permit may be suspended or revoked by the collector, after notice and an opportunity to be heard as set forth in chapter 1, article V of this code, for failure of the permittee, or any of the permittee's agents or employees, to comply with applicable local, State, or federal rules, regulations, or laws concerning tobacco retailing, based on matters occurring after the permit is issued or on matters not considered at the time of issuance of the permit that would have authorized denial of the permit or the imposition of conditions on the permit."

Part 28. The Title of Chapter 13 of the Oxnard City Code is hereby amended to read as follows:

"**CHAPTER 13: ~~TAXATION~~ASSESSMENTS, FEES AND TAXES**"

Part 29. Section 14-106(J) of the Oxnard City Code is hereby amended to read as follows:

"(J) A responsible person may refuse consent to an inspection conducted by the code official. If consent is refused, the code official may seek an administrative ~~search~~ inspection warrant pursuant to Cal. Code of Civil Procedure, Sections 1822.50 *et seq.*"

Part 30. Section 16-10(A)(69) is hereby added to the Oxnard City Code to read as follows:

"(69) ~~HOTEL~~ HOSPITAL - A health facility having a duly constituted governing body with overall administrative and professional responsibility and having an organized medical staff which provides 24-hour inpatient care including one or more of the following basic services: medical, nursing, surgical, anesthesia, laboratory, radiology, pharmacy, dietary services, or psychiatric care and treatment."

Part 31. Section 15-11(B) of the Oxnard City Code is hereby amended to read as follows:

"(B) Neither a tentative parcel map nor parcel map shall be required in the situations described in Cal. Gov't Code, Section 66428, Subsection (a), Subdivisions (1) and (2); provided, however, that a parcel map shall be required in a situation described in Cal. Gov't Code, Section 66428, Subsection (a), Subdivision (2) ~~and~~ if the decision-making body finds, based on facts in the record, that public policy necessitates a parcel map."

Part 32. Section 15-267(D) of the Oxnard City Code is hereby amended to read as follows:

"(D) If any lot to be merged was not created in compliance with applicable laws and ordinances in effect at the time of the lot's creation, the application shall be heard by the commission, which may impose on the granting of the application whatever conditions the commission could impose on the issuance of a conditional certificate of compliance pursuant to Cal. Gov't Code, Section 66499.36 Subdivision (B) with respect to such illegally created lot. If one or more of the lots to be merged ~~in~~ is nonconforming at the time of application, the application may be approved if the resulting parcel and all structures and parking spaces thereon comply with the general plan, with any applicable specific plan, and with the minimum area, width, frontage and yard requirements of the zone in which the parcel is located."

Part 33. Severability. If any section, subsection, sentence, clause, phrase, part or portion of this Ordinance is for any reason held to be invalid or unconstitutional by any court of competent jurisdiction, such decision will not affect the validity of the remaining portions of this Ordinance. The City Council declares that it would have adopted this Ordinance and each section, subsection, sentence, clause, phrase, part or portion thereof, irrespective of the fact that any one of more section, subsections, sentences, clauses, phrases, parts or portions be declared invalid or unconstitutional.

Part 34. Pursuant to Cal. Gov. Code Section 36933(c)(1), the City Attorney was designated to prepare, and the City Clerk published, a summary of this ordinance, and a certified copy of the ordinance was posted in the Office of the City Clerk a minimum of five days before the City Council's adoption of the ordinance.

Part 35. Within fifteen days after passage, the City Clerk shall cause this ordinance to be published one time in a newspaper of general circulation, published and circulated in the City. Ordinance No. _____ was first read on _____, 2023, and finally adopted on _____, 2023, to become effective thirty days thereafter.

AYES:

NOES:

ABSENT:

ABSTAIN:

_____
John C. Zaragoza, Mayor

ATTEST:

_____
Rose Chaparro, City Clerk

APPROVED AS TO FORM:

_____
Stephen M. Fischer, City Attorney

CITY COUNCIL AGENDA REPORT

INFORMATION/CONSENT AGENDA
AGENDA ITEM NO. L.4

DATE: September 19, 2023

TO: City Council

FROM: Emilio Ramirez, Housing Director, (805) 385-8094, emilio.ramirez@oxnard.org

SUBJECT: Encampment Resolution Grant. (10 minutes)

RECOMMENDATION

That the City Council:

1. Find that there is a need to take immediate action on the following item and that the need for action came to the attention of City staff subsequent to this agenda being posted (2/3 vote required); and

If the City Council makes this finding, that the City Council:

2. Approve receipt of an Encampment Resolution Fund grant from the State of California in the amount of $4,015,638.88 to respond to the continuing need at the homeless encampments located on McWane Boulevard and at Fifth Street east of Harbor Boulevard;

3. Authorize the City Manager, or designee, to execute the Standard Agreement and corresponding documents with the State of California for the receipt and use of the Encampment Resolution Fund grant;

4. Approve and authorize the City Manager, or designee, to execute an agreement with the County of Ventura and the Ventura County Continuum of Care for partnership with delivery of encampment response in an amount not to exceed $663,448.26;

5. Approve and authorize the City Manager, or designee, to execute a Consultant Professional Services agreement with LeSar Support Services for grant administration in an amount not to exceed $90,000 for one year, with the option to extend the agreement for up to four additional one-year terms; and

6. Authorize the City Manager, or designee, to approve budget appropriations for the use of grant funds.

(This item did not originate in Committee.)

BACKGROUND

Two large homeless encampments currently exist in Oxnard with an estimated aggregate total of seventy-five people. The first one is approximately a quarter mile long and is located on private property near the corner of Fifth Street and Harbor Boulevard along a canal. The second site is on a public right-of-way stretching 500 feet at the terminus of McWane Boulevard. These sites are unsanitary, serious, and environmental concerns exist due to the lack of running water, plumbing and garbage disposal.

Local homeless service providers have provided outreach and homeless information systems assessments to determine the individual housing needs and support services. Based on these assessments, close to ninety percent of the people self-reported mental health conditions and substance-use disorders, while at least ten percent have also reported physical

disabilities.

In partnership with the County of Ventura, the staff submitted a grant application to the State of California's Encampment Resolution Fund proposing a plan to respond to both encampments. On June 14, 2023, the State of California awarded a grant in the amount of $4,015,638.88 from the Encampment Resolution Fund to allow the City of Oxnard and the County of Ventura to cooperate on an effort to relocate residents from the above mentioned encampments in Oxnard and provide interim shelter with support services with subsequent transition to permanent supportive housing units that are actively under construction, such as the Homeless Solutions Center. Once the encampment sites are vacant, the properties will be remediated by removing the debris and securing the properties.

DISCUSSION

The proposal for both encampments seeks a comprehensive response to meet the needs of the people living in the encampment as well as the neighborhoods surrounding the encampments.

Over the past four months, the City of Oxnard, the County of Ventura and various nonprofit service providers, have visited both encampments to identify the number and demographics of people in each encampment.

Responses from these visits indicated that simply moving the encampment residents to a congregate shelter without providing necessary support services would not be a sustainable solution. Rather, providing a non-congregate shelter setting and requiring participants to engage in extensive case management with the County of Ventura would lead to a successful transition into permanent supportive housing.

From the encampment resolution fund grant, approximately $3,350,700 are programmed for interim sheltering. The City of Oxnard will seek a partnership with a local motel operator to provide interim shelter.

The motel operator will ensure the smooth day-to-day running of the site and maintain a safe environment for all occupants, with the support of City staff. The partnership with the motel operator will continue through at least July 2024, to allow for the successful transition of shelter clients to the permanent supportive housing locations actively under construction throughout the City of Oxnard.

From the Encampment Resolution Fund grant, approximately $663,558.26 is proposed for program operations including outreach, case management, and alcohol and drug treatment offered by Ventura County Health Care Agency (VCHCA).

VCHCA staff will provide street outreach services to engage encampment inhabitants into services including the interim shelter component of this program. Once in shelter, VCHCA case managers will work onsite with clients to develop housing plans, gather chronic homelessness documentation, and present clients for permanent supportive housing. Staff will also work to integrate the project with existing Health Care for the Homeless services including street medicine and connection to Enhanced Care Management (ECM) and Community Supports for clients who are eligible for services through CalAIM. ECM provides comprehensive care management that coordinates health and health-related care and services. Community Supports are services that help address members' health-related social needs.

The Encampment Resolution Funding Program Standard Agreement is activated upon its signing by both the California Interagency Council on Homelessness and the Grantee. Grant funds will be disbursed upon receipt, review, and approval of the Standard Agreement and corresponding documents by the State of California. Grantees are required to expend no less than 50 percent of grant funds by June 30, 2024. 100 percent of program funds must be expended by June 30, 2026.

Staff expects to have all parties under contract within October and launch efforts on November 1.

Because this item was added to the agenda subsequent to the agenda posting (more than 24 hours but less than 36 hours before the meeting), Government Code Section 54954.2(b)(2) requires the City Council to make a finding by ⅔ vote that there is a need to take immediate action on this item and that the need for action came to the attention of the City subsequent to the agenda being posted.

The encampments on the properties have gotten progressively worse over time, culminating with confirmation since the posting of this agenda that the health and safety issues presented by the encampments necessitate immediate action to

relocate residents from these encampments to interim shelter locations with the eventual transition to permanent supportive housing units. After the posting of this agenda, City staff received notice that funding would be available for this particular encampment on an expedited basis. The properties in need of remediation are unsanitary and present serious health and environmental concerns due to the lack of running water, plumbing, and garbage disposal.

STRATEGIC PRIORITIES

This agenda item supports the Quality of Life strategy. The purpose of the Quality of Life strategy is to restore and increase quality services and programs that enrich Oxnard's diverse community, promotes safe neighborhoods, encourages community engagement, and supports our residents in their efforts to improve their quality of life.

FINANCIAL IMPACT

The awarded grant amount of $4,015,638.88 in addition to the FY2023-24 General Fund adopted budget allocation of $200,000 is sufficient to complete the encampment response. Approval of the recommended action will authorize appropriation of the grant funding (State Grant Fund 210).

For Finance Use Only: General Fund - $200,000 (Org. 1018103 Obj. 53200)

COMMITTEE OUTCOME

This item did not originate in Committee.

Prepared by: Emilio Ramirez, Housing Director

ATTACHMENTS

1. Agreement Number 23-ERF-2-10017
2. Agreement Number 32400182

SCO ID:

STATE OF CALIFORNIA - DEPARTMENT OF GENERAL SERVICES

STANDARD AGREEMENT

STD 213 (Rev. 04/2020)

AGREEMENT NUMBER	PURCHASING AUTHORITY NUMBER (If Applicable)
23-ERF-2-R-10017	010725

1. This Agreement is entered into between the Contracting Agency and the Contractor named below:

CONTRACTING AGENCY NAME
Business, Consumer Services and Housing Agency

CONTRACTOR NAME
Ventura County Continuum of Care

2. The term of this Agreement is:

START DATE
Upon BCSH Approval

THROUGH END DATE
3/31/2027

3. The maximum amount of this Agreement is:
$4,015,638.88 (Four Million Fifteen Thousand Six Hundred Thirty Eight Dollars and Eighty Eight Cents)

4. The parties agree to comply with the terms and conditions of the following exhibits, which are by this reference made a part of the Agreement.

	Exhibits	Title	Pages
	Exhibit A	Authority, Purpose and Scope of Work	6
	Exhibit B	Budget Detail and Disbursement Provisions	4
	Exhibit C	State of California General Terms and Conditions	1
+ -	Exhibit D	General Terms and Conditions	10
+ -	Exhibit E	Special Terms and Conditions	2

Items shown with an asterisk (*), are hereby incorporated by reference and made part of this agreement as if attached hereto.
These documents can be viewed at https://www.dgs.ca.gov/OLS/Resources

IN WITNESS WHEREOF, THIS AGREEMENT HAS BEEN EXECUTED BY THE PARTIES HERETO.

CONTRACTOR

CONTRACTOR NAME (if other than an individual, state whether a corporation, partnership, etc.)
Ventura County Continuum of Care

CONTRACTOR BUSINESS ADDRESS	CITY	STATE	ZIP
800 South Victoria Avenue	Ventura	CA	93009

PRINTED NAME OF PERSON SIGNING	TITLE

CONTRACTOR AUTHORIZED SIGNATURE	DATE SIGNED

SCO ID:

STATE OF CALIFORNIA - DEPARTMENT OF GENERAL SERVICES

STANDARD AGREEMENT

STD 213 (Rev. 04/2020)

AGREEMENT NUMBER	PURCHASING AUTHORITY NUMBER (If Applicable)
23-ERF-2-R-10017	010725

STATE OF CALIFORNIA

CONTRACTING AGENCY NAME			
Business, Consumer Services and Housing Agency			
CONTRACTING AGENCY ADDRESS	CITY	STATE	ZIP
500 Capitol Mall, Suite 1850	Sacramento	CA	95814
PRINTED NAME OF PERSON SIGNING	TITLE		
Lourdes Castro Ramírez	Secretary		
CONTRACTING AGENCY AUTHORIZED SIGNATURE	DATE SIGNED		
CALIFORNIA DEPARTMENT OF GENERAL SERVICES APPROVAL	EXEMPTION (If Applicable)		

California Interagency Council on Homelessness

Authorized Signatories Form
Cal ICH Grant Programs

Instructions: This form is intended to list all of the individuals who are authorized to sign Cal ICH grant documents on behalf of the administrative entity. The authorized representative who signs this form must be an individual who is authorized to legally bind the administrative entity to Cal ICH grant agreements. The authorized representative is authorized to sign all Cal ICH grant documents on behalf of the administrative entity and may authorize additional signatories to sign Cal ICH grant documents using the 'Authorized Signatories' section below.

Grantee information: Enter the names of the eligible jurisdiction (ie. Sacramento CoC) and administrative entity (ie. Sacramento Steps Forward) and select all of the Cal ICH grant programs to which this form applies.

Authorized Signatories: Enter the names and title/position of the individuals authorized by the authorized representative to sign Cal ICH grant documents. Each of the authorized signatories listed below must sign this form. Signatures may be wet or electronic.

Certification: By signing this form, the authorized representative certifies that they are authorized to legally bind the administrative entity to Cal ICH grant agreements, they are authorized to sign all Cal ICH grant documents, and the authorized signatories listed on this form are additionally authorized to sign Cal ICH grant documents. Signatures may be wet or electronic.

Changes to this form: This form must be updated by the administrative entity whenever the authorized representative or signatories change.

GRANTEE INFORMATION

Eligible Jurisdiction:

Administrative Entity:

This form applies to the following grants: ☐ HHAP-1 ☐ HHAP-2 ☐ HHAP-3 ☐ HHAP-4 ☐ ERF ☐ FHC ☐ Other: _____

AUTHORIZED SIGNATORIES

Name	Title/Position	Signature

CERTIFICATION

I certify that I am legally authorized to sign grant documents and that I am additionally authorizing the above signatories to sign Cal ICH grant documents.

Name of Authorized Representative

Title

Signature of Authorized Representative

Date

Rev 01/2022

BUSINESS, CONSUMER SERVICES AND HOUSING AGENCY
California Interagency Council on Homelessness
500 Capitol Mall, Suite 1850
Sacramento, CA 95814
Phone: (916) 653-4090
Fax: (916) 653-3815

ENCAMPMENT RESOLUTION FUND (ERF-2-R)
REQUEST FOR FUNDS FORM

Contract Number	23-ERF-2-R-10017		
Invoice Number	23-ERF-2-R-10017	**Expenditure Deadline:**	6/30/2026
Grantee Name:	City of Oxnard	**Contact Person:**	James Boyd
Attention to:		**Contact Person Title:**	County of Ventura Health Care for the Homeless Manager
Address:	800 South Victoria Avenue	**E-mail:**	james.boyd@ventura.org
City/State/Zip:	Ventura, CA 93009	**Phone No.:**	(805) 652-6111

ENCAMPMENT RESOLUTION FUNDING BREAKDOWN

AWARD

Per Health and Safety Code Section 50251 (a), a recipient may use encampment resolution funds for the purpose of ensuring the safety and wellness of people experiencing homelessness in encampments, resolving critical encampment concerns and transition individuals into safe and stable housing, and encouraging a data-informed, coordinated approach to address encampment concerns. Funds shall be spent on resolving the identified, prioritized encampment through activities including, but not limited to, all of the following:

- Rapid Rehousing
- Operating Subsidies
- Street Outreach
- Systems Support
- Delivery of Permanent Housing
- Prevention and Shelter Diversion
- Interim Sheltering
- Improvements to Existing Emergency Shelters
- Administration (up to 5%)

TOTAL: $4,015,638.88

CERTIFICATION

**By signing this form, I certify to the best of my knowledge and belief that the form is true, complete, and accurate, and the activities and budget are for the purposes and objectives set forth in the terms and conditions of the Standard Agreement. I am aware that any false, fictitious, or fraudulent information, or the omission of any material fact, may subject me to criminal, civil or administrative penalties for fraud, false statements, false claims or otherwise.*

Name of Authorized Representative or Signatory	**Title of Authorized Representative or Signatory**
Signature of Authorized Representative or Signatory	**Date**

BCSH USE ONLY

Jeannie McKendry	Grants Development Section Chief
Grant Management Representative Name	**Grant Management Representative Title**
Signature of Grant Management Representative	**Date**

Encampment Resolution Funding Program
Round 2, Rolling Disbursement (ERF-2-R)
Standard Agreement

EXHIBIT A
AUTHORITY, PURPOSE, AND SCOPE OF WORK

1) **Authority**

The State of California has established the Encampment Resolution Funding Program ("ERF" or "Program") pursuant to Chapter 7 (commencing with Section 50250) of Part 1 of Division 31 of the Health and Safety Code. Amended by SB 197 (Statutes of 2022, Chapter 70, Sec.3-8, effective June 30, 2022).

The Program is administered by the California Interagency Council on Homelessness ("Cal ICH") in the Business, Consumer Services and Housing Agency ("Agency"). ERF provides one-time, competitive grant funds to Continuums of Care and / or Local Jurisdictions as defined below. To date, there have been two rounds of the Encampment Resolution Funding Program. This Standard Agreement governs the Rolling Disbursement in Round 2 of the ERF Program ("ERF-2-R"). For this Standard Agreement, ERF-2-R is synonymous with "ERF" or "Program"." and refers to programs and grantees under Health and Safety Code 50252.1(c)(1).

This Standard Agreement along with all its exhibits ("Agreement") is entered into by Cal ICH and a Continuum of Care or a Local Jurisdiction ("Grantee") under the authority of, and in furtherance of, the purpose of the Program. In signing this Agreement and thereby accepting this award of funds, the Grantee agrees to comply with the terms and conditions of this Agreement, the Notice of Funding Availability ("NOFA") under which the Grantee applied, the representations contained in the Grantee's application, Cal ICH guidance or directives, and the requirements appearing in the statutory authority for the Program cited above.

2) **Purpose**

As stated in the NOFA, the Program's objective is to fund actionable, person-centered local proposals that resolve the experience of unsheltered homelessness for people residing in encampments. Resolving these experiences of homelessness will necessarily address the safety and wellness of people within encampments, resolve critical encampment concerns, and transition individuals into interim shelter with clear pathways to permanent housing or directly into permanent housing, using data informed, non-punitive, low-barrier, person-centered, Housing First, and coordinated approaches. These projects must comply with the principles of Housing First as defined in Welfare and Institutions Code Section 8255. Proposals may bolster existing, successful models and/or support new approaches that provide safe stable, and ultimately permanent housing for people experiencing homelessness in

encampments. Expenditures shall be consistent with the legislative intent of the authorizing statute to ensure the safety and wellness of people experiencing homelessness in encampments.

3) **Definitions**

The following Encampment Resolution Funding Program terms are defined in accordance with Health and Safety Code Section 50250, Subdivisions (a) – (l);

(a) "Additional funding round moneys" means moneys appropriated for the program in or after fiscal year 2022–23.

(b) "Agency" means the Business, Consumer Services, and Housing Agency.

(c) "Applicant" means a continuum of care or local jurisdiction

(d) "Continuum of Care" has the same meaning as in Section 578.3 of Title 24 of the Code of Federal Regulations.

(e) "Council" means the California Interagency Council on Homelessness, previously known as the Homeless Coordinating and Financing Council created pursuant to Section 8257 of the Welfare and Institutions Code.

(f) "County" includes, but is not limited to, a city and county.

(g) "Funding round 1 moneys" means moneys appropriated for the program in fiscal year 2021–22.

(h) "Homeless" has the same meaning as in Section 578.3 of Title 24 of the Code of Federal Regulations.

(i) "Local Jurisdiction" means a city, including a charter city, a county, including a charter county, or a city and county, including a charter city and county.

(j) "Program" means the Encampment Resolution Funding program established pursuant to this chapter.

(k) "Recipient" means an applicant that receives grant funds from the council for the purposes of the program.

(l) "State right-of-way" means real property held in title by the State of California

Additional definitions for the purposes of ERF program:

"Grantee" is "a Continuum of Care or a Local Jurisdiction that receives grant funds from the Council for the purposes of the program. Grantee is synonymous with "Recipient."

Initial Here_____

"Subrecipients" or "Subgrantees" are entities that receive subawards from "Recipients" or "Grantees" to carry out part of the Program.

"Expended" means all ERF funds obligated under contract or subcontract that have been fully paid and receipted, and no invoices remain outstanding.

"Obligate" means that the Grantee has placed orders, awarded contracts, received services, or entered into similar transactions that require payment using ERF funding. Grantees must obligate the funds by the statutory deadlines set forth in this Exhibit A.

"Cal ICH" is synonymous with "Council".

4) **Scope of Work**

This Scope of Work identifies the terms and conditions necessary to accomplish the Program's intended objectives.

As detailed in Exhibit A.2, the Program's objective is to fund grantees to implement actionable, person-centered local proposals that resolve the experience of unsheltered homelessness for people residing in encampments.
Grantees will implement their ERF funded local proposals in compliance with the terms and conditions of this Agreement, the NOFA under which the Grantee applied, the representations contained in the Grantee's application, Cal ICH guidance and directives, and the requirements per the authorizing statute.

Expenditures shall be consistent with the legislative intent of the authorizing statute to ensure the safety and wellness of people experiencing homelessness in encampments. Permissible eligible uses and activities are detailed below in Exhibit B, Budget Details and Disbursement Provisions. Prior to fully executing this agreement, Grantees must standardize their budget using a Cal ICH provided budget template.

Grantees are expected to be close partners with Cal ICH. This means timely and accurate reporting, candid communication of successes and challenges, and availability of persons, information, or materials.

Quarterly reporting requirements are detailed below in Exhibit D.4. Reporting, Evaluation, and Audits.

Fiscal deadlines are detailed below in Exhibit A.6. Effective Date, Term of Agreement, and Deadlines.

Grantees shall complete a Final Work Product (As detailed below in Exhibit A.6.d.) and participate in a program evaluation regarding their implementation of ERF awards. To support this effort, Cal ICH will make Technical Assistance available.

Cal ICH maintains sole authority to determine if a Grantee is acting in compliance with the program objectives and may direct Grantees to take specified actions or risk breach of this Agreement. Grantees will be provided reasonable notice and Cal ICH's discretion in making these determinations are absolute and final.

5) **Cal ICH Contract Coordinator**

Cal ICH's Contract Coordinator for this Agreement is the Council's Grant Development Section Chief or the Grant Development Section Chief's designee. Unless otherwise instructed, any communication shall be conducted through email to the Cal ICH Contractor Coordinator or their designee. If documents require an original signature, the strongly preferred form is an e-Signature in accordance with the Uniform Electronic Transactions Act (UETA). If an Awardee is unwilling or unable to sign a document electronically, Agency shall accept wet or original signed documents. These documents containing wet signatures should be both mailed to Cal ICH and scanned and emailed as instructed. State law or policy may require the use of wet signatures for specific documents. The Representatives during the term of this Agreement will be:

	PROGRAM	**GRANTEE**
ENTITY:	Business, Consumer Services and Housing Agency	Ventura County Continuum of Care
SECTION/UNIT:	California Interagency Council on Homelessness (Cal ICH)	
ADDRESS:	801 Capital Mall, 6th floor Sacramento, CA, 95814	800 South Victoria Avenue Ventura, CA 93009
CONTRACT COORDINATOR	Jeannie McKendry	James Boyd
PHONE NUMBER:	(916) 510-9446	(805) 652-6111
EMAIL ADDRESS:	Jeannie.McKendry@bcsh.ca.gov and calichgrants@bcsh.ca.gov	james.boyd@ventura.org

The Council reserves the right to change their Cal ICH Contractor Coordinator, designee, and / or contact information at any time with reasonable notice to the Grantee.

Initial Here_____

All requests to update the Grantee information listed within this Agreement shall be emailed to Cal ICH grant's general email box at calichgrants@bcsh.ca.gov.

Notice to either party may be given by email. Such notice shall be effective when received as indicated on email. Changes to Cal ICH Contractor Coordinator, designee, and / or contact information or grantee information can be made without a formal amendment, approved by DGS.

6) **Effective Date, Term of Agreement, and Deadlines**

a) This Agreement is effective upon execution by Cal ICH, which includes signature from the Grantee and Cal ICH. This is indicated by the Cal ICH provided signature and date on the second page of the accompanying STD. 213, Standard Agreement.

b) Performance shall start no later than 30 days, or on the express date set by Cal ICH and the Grantees, after all approvals have been obtained and the Grant Agreement is fully executed. Should the Grantee fail to commence work at the agreed upon time, Cal ICH, upon five (5) days written notice to the grantee, reserves the right to terminate the Agreement.

c) Grantees will continue to perform until the Agreement is terminated, including data reporting and participation in program evaluation activities, as needed.

d) This Agreement will terminate on March 31, 2027.

Grantees shall submit a Final Work Product by September 30, 2026. The Final Work Product will include programmatic and fiscal data and a narrative on the outputs and outcomes of the program on a reporting template to be provided by Cal ICH.

Cal ICH will review submitted Final Work Products and collaborate with Grantees to cure any deficiencies by March 31, 2027.

Grantees are expected to continue performing until March 31, 2027. This means timely and accurate reporting, candid communication of success or shortcomings, and availability of persons, information, or materials.

e) Expenditure and Obligation Deadlines:

i. Grantees shall expend no less than 50 percent and obligate 100 percent of Program funds by June 30, 2024.

ii. Grantees that have not obligated 100 percent of their Program funds by June 30, 2024, shall submit an alternative disbursement plan to Cal ICH for approval no later than July 30, 2024. This alternative disbursement plan should detail the explanation for the delay and plans for all future obligations and expenditures.

iii. Grantees not meeting the requirements outlined in (i) may be subject to additional corrective action, as determined by Cal ICH.

iv. All Program funds (100 percent) shall be expended by June 30, 2026. Any funds not expended by this date shall revert to the fund of origin pursuant to HSC Section 50253(e)(5).

7) **Special Conditions**

Cal ICH maintains sole authority to determine if a Grantee is acting in compliance with the program objectives and may direct Grantees to take specified actions or risk breach of this Agreement. Grantees will be provided reasonable notice and Cal ICH's discretion in making these determinations are absolute and final.

Encampment Resolution Funding Program
Standard Agreement

EXHIBIT B
BUDGET DETAIL and DISBURSEMENT PROVISIONS

1) **General Conditions Prior to Disbursement**

All Grantees must submit the following completed forms prior to ERF being released:

- Request for Funds Form ("RFF")
- STD 213 Standard Agreement form and initialed Exhibits A through E
- STD 204 Payee Data Record or Government Agency Taxpayer ID Form

2) **Disbursement of Funds**

ERF will be disbursed to the Grantee upon receipt, review and approval of the completed Standard Agreement and RFF by Cal ICH, the Department of General Services (DGS), and the State Controller's Office (SCO).

The RFF must include the total amount of Program funds proposed to be expended. The ERF will be disbursed in one allocation via mailed check once the RFF has been received by the SCO. Checks will be mailed to the address and contact name listed on the RFF.

3) **Budget Details and Expenditure of Funds**

The Grantee shall expend Program funds on eligible uses and activities as detailed in the submitted standardized budget. Cal ICH reserves the right to direct specific line-item changes in the originally submitted Application budget or subsequently submitted standardized budgets.

a) **Budget Changes**

i) Process:

Budget modification requests should be made as part of the quarterly report process. These requests will be reviewed in the first week after quarterly reports are received. Cal ICH may consider budget change requests outside of this process, through email as needed due to documented, exigent circumstances. Grantees carry the burden to anticipate foreseeable budget change requests and should plan accordingly.

Cal ICH reserves the right to amend or adjust this process as necessary.

Initial Here_____

ii) Conditions requiring a budget modification request:

Changes may be made to the timing (e.g., fiscal year) of eligible use expenditures without prior approval by Cal ICH so long as the total expenditures (actual and projected) for each eligible use category remain the same as approved in the standardized budget.

Any decrease or increase to the total expenditures for any eligible use category must be approved by Cal ICH's Grant Development Section Chief or their designee, in writing, before the Grantee may expend Program funds according to an alternative standardized budget. The Grant Development Section Chief will respond to Grantee with approval or denial of request. Failure to obtain written approval from Cal ICH as required by this section may be considered a breach of this Agreement. A breach of this agreement may result in remedies listed below in Exhibit D.6. Breach and Remedies.

Regardless of an increase or decrease of an expenditure amount, any significant or material programmatic or fiscal change as considered by a reasonable project manager should be submitted to Cal ICH for approval.

b) Eligible Uses

Eligible uses and activities must be consistent with HSC Sections 50250 – 50254, other applicable laws, the terms and conditions of this Agreement, Cal ICH guidance or directives, the NOFA under which the Grantee applied, representations contained in the Grantee's application, and the Purpose of the Program as detailed in Exhibit A.2. Purpose.

Eligible uses and activities include, but are not limited to, the following:

Rapid Rehousing: Rapid rehousing, including housing identification services, rental subsidies, security deposits, incentives to landlords, and holding fees for eligible persons, housing search assistance, case management and facilitate access to other community-based services.

Operating Subsidies: Operating subsidies in new and existing affordable or supportive housing units, emergency shelters, and navigation centers. Operating subsidies may include operating reserves.

Street Outreach: Street outreach to assist eligible persons to access crisis services, interim housing options, and permanent housing and services. Services Coordination Services coordination, which may include access to workforce, education, and training programs, or other services needed to improve and

promote housing stability for eligible persons, as well as direct case management services being provided to persons.

Systems Support: Systems support for activities that improve, strengthen, augment, complement, and/or are necessary to create regional partnerships and a homeless services and housing delivery system that resolves persons' experiences of unsheltered homelessness.

Delivery of Permanent Housing: Delivery of permanent housing and innovative housing solutions, such as unit conversions that are well suited for eligible persons.

Prevention and Shelter Diversion: Prevention and shelter diversion to permanent housing, including flexible forms of financial assistance, problem solving assistance, and other services to prevent people that have been placed into permanent housing from losing their housing and falling back into unsheltered homelessness. This category is only available to serve people who were formerly residing in the prioritized ERF encampment site.

Interim Sheltering: Interim sheltering, limited to newly developed clinically enhanced congregate shelters, new or existing non-congregate shelters, and operations of existing navigation centers and shelters based on demonstrated need that are well suited for eligible persons.

Improvements to Existing Emergency Shelters: Improvements to existing emergency shelters to lower barriers, increase privacy, better address the needs of eligible persons, and improve outcomes and exits to permanent housing.

Administration: up to 5% of awarded Program funds may be applied to administrative costs.

Program funds shall not be expended on Site Restoration or other Ineligible Costs as detailed immediately below.

4) **Ineligible Costs**

ERF shall not be used for costs associated with activities in violation, conflict, or inconsistent with HSC Sections 50250 – 50254, other applicable laws, the terms and conditions of this Agreement, Cal ICH guidance or directives, the NOFA under which the Grantee applied, representations contained in the Grantee's application, and the Purpose of the Program as detailed in Exhibit A.2. Purpose.

Costs shall not be used for any use or activity that is in violation, conflict, or inconsistent with the legislative intent of the authorizing statute to ensure the safety and wellness of people experiencing homelessness in encampments.

Initial Here_____

Moreover, no parties to this contract nor their agents shall directly or indirectly use ERF awards for any use or activity that is in violation, conflict, or inconsistent with the legislative intent of the authorizing statute to ensure the safety and wellness of people experiencing homelessness in encampments. ERF funded activities that cause a traumatic effect are inconsistent with ensuring the safety and wellness of people experiencing homelessness in encampments.

Cal ICH, at its sole and absolute discretion, shall make the final determination regarding the allowability of ERF expenditures.

Cal ICH reserves the right to request additional clarifying information to determine the reasonableness and eligibility of all uses of the funds made available by this Agreement. If the Grantee or its funded subrecipients use ERF funds to pay for ineligible activities, the Grantee shall be required to reimburse these funds to Cal ICH at an amount and timeframe determined by Cal ICH.

An expenditure which is not authorized by this Agreement, or by written approval of Cal ICH, or which cannot be adequately documented, shall be disallowed, and must be reimbursed to Cal ICH by the Grantee at an amount and timeframe determined by Cal ICH.

Program funds shall not be used to supplant existing local funds for homeless housing, assistance, prevention, or encampment resolution including site restoration or waste management.

Unless expressly approved by Cal ICH in writing reimbursements are not permitted for any Program expenditures prior to this Agreement's date of execution.

Initial Here_____

Encampment Resolution Funding Program
Standard Agreement

EXHIBIT C
STATE OF CALIFORNIA GENERAL TERMS AND CONDITIONS

This exhibit is incorporated by reference and made part of this agreement. The General Terms and Conditions (GTC 04/2017) can be viewed at the following link:

https://www.dgs.ca.gov/-/media/Divisions/OLS/Resources/GTC-April-2017-FINALapril2017.pdf?la=en&hash=3A64979F777D5B9D35309433EE81969FD69052D2

In the interpretation of this Agreement, any inconsistencies between the State of California General Terms and Conditions (GTC - 04/2017) and the terms of this Agreement and its exhibits/attachments shall be resolved in favor of this Agreement and its exhibits/attachments.

Initial Here_____

Encampment Resolution Funding Program
Standard Agreement

EXHIBIT D
GENERAL TERMS AND CONDITIONS

1) **Termination and Sufficiency of Funds**

a) **Termination of Agreement**

Cal ICH may terminate this Agreement at any time for cause by giving a minimum of 14 days' notice of termination, in writing, to the Grantee. Cause shall consist of violations of any conditions of this Agreement, any breach of contract as described in paragraph 6 of this Exhibit D; violation of any federal or state laws; or withdrawal of Cal ICH's expenditure authority. Upon termination of this Agreement, unless otherwise approved in writing by Cal ICH, any unexpended funds received by the Grantee shall be returned to Cal ICH within 30 days of Cal ICH's specified date of termination.

b) **Sufficiency of Funds**

This Agreement is valid and enforceable only if sufficient funds are made available to Cal ICH by legislative appropriation. In addition, this Agreement is subject to any additional restrictions, limitations or conditions, or statutes, regulations or any other laws, whether federal or those of the State of California, or of any agency, department, or any political subdivision of the federal or State of California governments, which may affect the provisions, terms or funding of this Agreement in any manner.

2) **Transfers**

Grantee may not transfer or assign by subcontract or novation, or by any other means, the rights, duties, or performance of this Agreement or any part thereof, except as allowed within Exhibit D.12. (Special Conditions – Grantees/Sub Grantee) or with the prior written approval of Cal ICH and a formal amendment to this Agreement to affect such subcontract or novation.

3) **Grantee's Application for Funds**

Grantee submitted a standardized budget to Cal ICH as part of their application for the Program.

Grantee warrants that all information, facts, assertions and representations contained in the application and approved modifications and additions thereto are true, correct, and complete to the best of Grantee's knowledge. In the event that any

part of the application and any approved modification and addition thereto is untrue, incorrect, incomplete, or misleading in such a manner that would substantially affect Cal ICH approval, disbursement, or monitoring of the funding and the grants or activities governed by this Agreement, then Cal ICH may declare a breach of this Agreement and take such action or pursue such remedies as are legally available.

4) **Reporting, Evaluation, and Audits**

a) **Reporting Requirements**

i. Timing and Format of Reports.

Grantee is required to provide Cal ICH or its agents with all data and outcomes that may inform an assessment of the funded proposal. Grantees shall report quarterly and have one Final Work Product submitted prior to this Agreement's termination.

The quarterly reports shall be submitted on a template to be provided by Cal ICH at least 90 days prior to the first reporting deadline. Cal ICH may request interim reports as needed and will provide no less than 30 days' notice to Grantees.

ii. Required Data

Grantees will be required to provide:

- Outreach and service path data at the anonymized, individual level;
- Current housing status of persons served in the aggregate;
- Status of funding as presented in the Cal ICH approved, standardized budget; and
- Continued confirmation that projects receiving ERF funds are populated timely into HMIS and use Cal ICH supplied funding codes.

Cal ICH's discretion in identifying which information shall be included in these reports is final.

Pursuant to HSC Section 50254, grantees shall provide data elements, including, but not limited to, health information, in a manner consistent with state and federal law, to their local Homeless Management Information System for tracking in the statewide Homeless Data Integration System.

Pursuant to HSC Section 50254(b)(3), Grantees shall report individual, client-level data for persons served by grant funding to the council, in addition to any data reported through local Homeless Management Information System, as required by the council for the purposes of research

and evaluation of grant performance, service pathways, and outcomes for people served.

Grantees shall comply with the data entry requirements of AB977, located at Welfare and Institutions Code section 8256(d).

iii. Cal ICH usage of Reports

Pursuant to HSC Section 50254(b)(4), Council staff may use information reported directly from grantees and through statewide Homeless Data Integration System for the purposes of research and evaluation of grant performance, service pathways, and outcomes for people served.

iv. Failure to Report

If the Grantee fails to provide any such report, Cal ICH may recapture any portion of the amount authorized by this Agreement with a 14-day written notification.

b) **Evaluation**

i. At Cal ICH's discretion, Grantees shall participate in a program evaluation regarding their implementation of ERF awards. To support this effort, Cal ICH will contract a third party to complete the evaluation.

ii. Grantees are expected to be close partners with Cal ICH for this program evaluation and for all evaluative aspects of this Program. This means timely and accurate reporting, candid communication of success or challenges, and availability of persons, information, or materials. More specifically, Grantees must cooperate with Cal ICH or its designee as reasonably required to implement an evaluation plan. This includes providing or facilitating the collection of data and materials as reasonably requested by Cal ICH or its designee.

iii. For the purpose of evaluation, Cal ICH or its designee may visit sites related to the project and film, tape, photograph, interview, and otherwise document Grantee's operations during normal business hours and with reasonable advance notice. Cal ICH will comply with Grantee's site visit terms during any site visits.

iv. Grantees should maintain active data, documents, and filings in anticipation of this evaluation. Special care should be taken to organize and preserve internal work products that guided implementation by the Grantee or subgrantee.

v. Grantees shall notify Cal ICH and provide copies of any reports or findings if Grantee conducts or commissions any third-party research or evaluation regarding their funded project.

vi. All terms and conditions that apply to reporting similarly apply to evaluation.

c) **Auditing**

Cal ICH reserves the right to perform or cause to be performed a financial audit. At Cal ICH request, the Grantee shall provide, at its own expense, a financial audit prepared by a certified public accountant. Should an audit be required, the Grantee shall adhere to the following conditions:

i) The audit shall be performed by an independent certified public accountant.

ii) The Grantee shall notify Cal ICH of the auditor's name and address immediately after the selection has been made. The contract for the audit shall allow access by Cal ICH to the independent auditor's working papers.

iii) The Grantee is responsible for the completion of audits and all costs of preparing audits.

iv) If there are audit findings, the Grantee must submit a detailed response acceptable to Cal ICH for each audit finding within 90 days from the date of the audit finding report.

5) **Inspection and Retention of Records**

a) **Record Inspection**

Cal ICH or its designee shall have the right to review, obtain, and copy all records and supporting documentation pertaining to performance under this Agreement. The Grantee agrees to provide Cal ICH, or its designee, with any relevant information requested. The Grantee agrees to give Cal ICH or its designee access to its premises, upon reasonable notice and during normal business hours, for the purpose of interviewing employees who might reasonably have information related to such records, and of inspecting and copying such books, records, accounts, and other materials that may be relevant to an investigation of compliance with the ERF laws, Cal ICH guidance or directives, and this Agreement.

b) **Record Retention**

The Grantee further agrees to retain all records described in subparagraph A for a minimum period of five (5) years after the termination of this Agreement.

Initial Here_____

If any litigation, claim, negotiation, audit, monitoring, inspection, or other action has been commenced before the expiration of the required record retention period, all records must be retained until completion of the action and resolution of all issues which arise from it.

c) Public Records Act

The grantees' final HHAP-4 application, this contract, and other documents related to the grant are considered public records, which are available for public viewing pursuant to the California Public Records Act.

6) **Breach and Remedies**

a) **Breach of Agreement**

Breach of this Agreement includes, but is not limited to, the following events:

i. Grantee's failure to comply with the terms or conditions of this Agreement.

ii. Use of, or permitting the use of, Program funds provided under this Agreement for any ineligible activities.

iii. Any failure to comply with the deadlines set forth in this Agreement.

b) **Remedies for Breach of Agreement**

In addition to any other remedies that may be available to Cal ICH in law or equity for breach of this Agreement, Cal ICH may:

i. Conduct a program monitoring which will include a corrective action plan (CAP) with findings, remedies, and timelines for resolving the findings.

ii. Bar the Grantee from applying for future ERF funds;

iii. Revoke any other existing ERF award(s) to the Grantee;

iv. Require the return of any unexpended ERF funds disbursed under this Agreement;

v. Require repayment of ERF funds disbursed and expended under this Agreement;

vi. Require the immediate return to Cal ICH of all funds derived from the use of ERF

vii. Seek, in a court of competent jurisdiction, an order for specific performance of the defaulted obligation or participation in the technical assistance in accordance with ERF requirements.

c) All remedies available to Cal ICH are cumulative and not exclusive.

d) Cal ICH may give written notice to the Grantee to cure the breach or violation within a period of not less than 14 days.

7) **Waivers**

No waiver of any breach of this Agreement shall be held to be a waiver of any prior or subsequent breach. The failure of Cal ICH to enforce at any time the provisions of this Agreement, or to require at any time, performance by the Grantee of these provisions, shall in no way be construed to be a waiver of such provisions nor to affect the validity of this Agreement or the right of Cal ICH to enforce these provisions.

8) **Nondiscrimination**

During the performance of this Agreement, Grantee and its subrecipients shall not unlawfully discriminate, harass, or allow harassment against any employee or applicant for employment because of sex (gender), sexual orientation, gender identity, gender expression, race, color, ancestry, religion, creed, national origin (including language use restriction), pregnancy, physical disability (including HIV and AIDS), mental disability, medical condition (cancer/genetic characteristics), age (over 40), genetic information, marital status, military and veteran status, denial of medical and family care leave or pregnancy disability leave, or any other characteristic protected by state or federal law. Grantees and Sub grantees shall ensure that the evaluation and treatment of their employees and applicants for employment are free from such discrimination and harassment. Grantee and its subrecipients shall comply with the provisions of California's laws against discriminatory practices relating to specific groups: the California Fair Employment and Housing Act (FEHA) (Gov. Code, Section 12900 et seq.); the regulations promulgated thereunder (Cal. Code Regs., tit. 2, Section 11000 et seq.); and the provisions of Article 9.5, Chapter 1, Part 1, Division 3, Title 2 of the Government Code (Gov. Code, Section 11135 - 11139.5). Grantee and its subrecipients shall give written notice of their obligations under this clause to labor organizations with which they have a collective bargaining or other agreement.

9) **Conflict of Interest**

All Grantees are subject to state and federal conflict of interest laws. Failure to comply with these laws, including business and financial disclosure provisions, will

result in the application being rejected and any subsequent contract being declared void. Other legal action may also be taken. Additional applicable statutes include, but are not limited to, Government Code Section 1090 and Public Contract Code Sections 10410 and 10411.

a) Current State Employees: No State officer or employee shall engage in any employment, activity, or enterprise from which the officer or employee receives compensation or has a financial interest, and which is sponsored or funded by any State agency, unless the employment, activity, or enterprise is required as a condition of regular State employment. No State officer or employee shall contract on his or her own behalf as an independent Grantee with any State agency to provide goods or services.

b) Former State Employees: For the two-year period from the date he or she left State employment, no former State officer or employee may enter into a contract in which he or she engaged in any of the negotiations, transactions, planning, arrangements, or any part of the decision-making process relevant to the contract while employed in any capacity by any State agency. For the twelve-month period from the date he or she left State employment, no former State officer or employee may enter into a contract with any State agency if he or she was employed by that State agency in a policy-making position in the same general subject area as the proposed contract within the twelve-month period prior to his or her leaving State service.

c) Employees of the Grantee: Employees of the Grantee shall comply with all applicable provisions of law pertaining to conflicts of interest, including but not limited to any applicable conflict of interest provisions of the Political Reform Act of 1974 (Gov. Code, Section 81000 et seq.).

d) Representatives of a County: A representative of a county serving on a board, committee, or body with the primary purpose of administering funds or making funding recommendations for applications pursuant to this chapter shall have no financial interest in any contract, program, or project voted on by the board, committee, or body on the basis of the receipt of compensation for holding public office or public employment as a representative of the county.

10) **Drug-Free Workplace Certification**

Certification of Compliance: By signing this Agreement, Grantee hereby certifies, under penalty of perjury under the laws of State of California, that it and its subrecipients will comply with the requirements of the Drug-Free Workplace Act of 1990 (Gov. Code, Section 8350 et seq.) and have or will provide a drug-free workplace by taking the following actions:

Initial Here_____

Publish a statement notifying employees and subrecipients that unlawful manufacture distribution, dispensation, possession, or use of a controlled substance is prohibited and specifying actions to be taken against employees, Grantees, or subrecipients for violations, as required by Government Code Section 8355, subdivision (a)(1).

a) Establish a Drug-Free Awareness Program, as required by Government Code Section 8355, subdivision (a)(2) to inform employees, Grantees, or subrecipients about all of the following:

   i. The dangers of drug abuse in the workplace;

   ii. Grantee's policy of maintaining a drug-free workplace;

   iii. Any available counseling, rehabilitation, and employee assistance program; and

   iv. Penalties that may be imposed upon employees, Grantees, and subrecipients for drug abuse violations.

b) Provide, as required by Government Code Section 8355, subdivision (a)(3), that every employee and/or subrecipient that works under this Agreement:

   i. Will receive a copy of Grantee's drug-free policy statement, and

   ii. Will agree to abide by terms of Grantee's condition of employment or subcontract.

11) **Child Support Compliance Act**

For any Contract Agreement in excess of $100,000, the Grantee acknowledges in accordance with Public Contract Code 7110, that:

a) The Grantee recognizes the importance of child and family support obligations and shall fully comply with all applicable state and federal laws relating to child and family support enforcement, including, but not limited to, disclosure of information and compliance with earnings assignment orders, as provided in Chapter 8 (commencing with Section 5200) of Part 5 of Division 9 of the Family Code; and

b) The Grantee, to the best of its knowledge is fully complying with the earnings assignment orders of all employees and is providing the names of all new employees to the New Hire Registry maintained by the California Employment Development Department.

Initial Here_____

12) **Special Conditions – Grantees/Subgrantee**

The Grantee agrees to comply with all conditions of this Agreement including the Special Conditions set forth in Exhibit E. These conditions shall be met to the satisfaction of Cal ICH prior to disbursement of funds. The Grantee shall ensure that all Subgrantees are made aware of and agree to comply with all the conditions of this Agreement and the applicable State requirements governing the use of ERF. Failure to comply with these conditions may result in termination of this Agreement.

a) The Agreement between the Grantee and any Subgrantee shall require the Grantee and its Subgrantees, if any, to:

   i. Perform the work in accordance with Federal, State and Local housing and building codes, as applicable.

   ii. Maintain at least the minimum State-required worker's compensation for those employees who will perform the work or any part of it.

   iii. Maintain, as required by law, unemployment insurance, disability insurance, and liability insurance in an amount that is reasonable to compensate any person, firm or corporation who may be injured or damaged by the Grantee or any Subgrantee in performing the Work or any part of it.

   iv. Agree to include and enforce all the terms of this Agreement in each subcontract.

13) **Compliance with State and Federal Laws, Rules, Guidelines and Regulations**

The Grantee agrees to comply with all state and federal laws, rules and regulations that pertain to construction, health and safety, labor, fair employment practices, environmental protection, equal opportunity, fair housing, and all other matters applicable and/or related to the ERF program, the Grantee, its subrecipients, and all eligible activities.

Grantee shall also be responsible for obtaining any and all permits, licenses, and approvals required for performing any activities under this Agreement, including those necessary to perform design, construction, or operation and maintenance of the activities. Grantee shall be responsible for observing and complying with any applicable federal, state, and local laws, rules or regulations affecting any such work, specifically those including, but not limited to, environmental protection, procurement, and safety laws, rules, regulations, and ordinances. Grantee shall provide copies of permits and approvals to Cal ICH upon request.

14) **Inspections**

a) Grantee shall inspect any work performed hereunder to ensure that the work is being and has been performed in accordance with the applicable federal, state and/or local requirements, and this Agreement.

b) Cal ICH reserves the right to inspect any work performed hereunder to ensure that the work is being and has been performed in accordance with the applicable federal, state and/or local requirements, and this Agreement.

c) Grantee agrees to require that all work that is determined based on such inspections not to conform to the applicable requirements be corrected and to withhold payments to the subrecipient until it is corrected.

15) **Litigation**

a) If any provision of this Agreement, or an underlying obligation, is held invalid by a court of competent jurisdiction, such invalidity, at the sole discretion of Cal ICH, shall not affect any other provisions of this Agreement and the remainder of this Agreement shall remain in full force and effect. Therefore, the provisions of this Agreement are and shall be deemed severable.

b) The Grantee shall notify Cal ICH immediately of any claim or action undertaken by or against it, which affects or may affect this Agreement or Cal ICH, and shall take such action with respect to the claim or action as is consistent with the terms of this Agreement and the interests of Cal ICH.

Encampment Resolution Funding Program
Standard Agreement

EXHIBIT E
SPECIAL TERMS AND CONDITIONS

1) All proceeds from any interest-bearing account established by the Grantee for the deposit of funds, along with any interest-bearing accounts opened by subrecipients to the Grantee for the deposit of funds, must be used for eligible activities and reported on as required by Cal ICH.

2) Grantee shall utilize its local Homeless Management Information System (HMIS) to track ERF projects, services, and clients served. Grantee will ensure that HMIS data are collected in accordance with applicable laws and in such a way as to identify individual projects, services, and clients that are supported by funding (e.g., by creating appropriate - ERF specific funding sources and project codes in HMIS).

3) Grantee shall participate in and provide data elements, including, but not limited to, health information, in a manner consistent with federal law, to the statewide Homeless Management Information System (known as the Homeless Data Integration System or "HDIS"), in accordance with their existing Data Use Agreement entered into with the Council, if any, and as required by Health and Safety Code Section 50254. Any health information provided to, or maintained within, the statewide Homeless Management Information System shall not be subject to public inspection or disclosure under the California Public Records Act (Chapter 3.5 (commencing with Section 6250) of Division 7 of Title 1 of the Government Code). For purposes of this paragraph, "health information" means "protected health information," as defined in Part 160.103 of Title 45 of the Code of Federal Regulations, and "medical information," as defined in subdivision (j) of Section 56.05 of the Civil Code. The Council may, as required by operational necessity, amend or modify required data elements, disclosure formats, or disclosure frequency. Additionally, the Council, at its discretion, may provide Grantee with aggregate reports and analytics of the data Grantee submits to HDIS in support of the Purpose of this Agreement and the existing Data Use Agreement.

4) Grantee agrees to accept technical assistance as directed by Cal ICH or by a contracted technical assistance provider acting on behalf of Cal ICH. Grantee will report to Cal ICH on programmatic changes the Grantee will make as a result of the technical assistance and in support of their grant goals.

5) Grantee should establish a mechanism for people with lived experience of homelessness to have meaningful and purposeful opportunities to inform and shape all levels of planning and implementation, including through opportunities to hire people with lived experience.

Initial Here_____

6) Cal ICH maintains sole authority to determine if a Grantee is acting in compliance with the program objectives and may direct grantees to take specified actions or risk breach of this Agreement. Grantees will be provided reasonable notice and Cal ICH's discretion in making these determinations are absolute and final.

Initial Here_____

State of California
Financial Information System for California (FI$Cal)

GOVERNMENT AGENCY TAXPAYER ID FORM

2000 Evergreen Street, Suite 215
Sacramento, CA 95815
www.fiscal.ca.gov
1-855-347-2250

The principal purpose of the information provided is to establish the unique identification of the government entity.

Instructions: You may submit one form for the principal government agency and all subsidiaries sharing the same TIN. Subsidiaries with a different TIN must submit a separate form. Fields bordered in red are required. Hover over fields to view help information. Please print the form to sign prior to submittal. You may email the form to: vendors@fiscal.ca.gov, or fax it to (916) 576-5200, or mail it to the address above.

Principal Government Agency Name

Remit-To Address (Street or PO Box)

City

State

Zip Code+4

Government Type:

- ☐ City
- ☐ County
- ☐ Special District
- ☐ Federal
- ☐ Other (Specify)

Federal Employer Identification Number (FEIN)

List other subsidiary Departments, Divisions or Units under your principal agency's jurisdiction who share the same FEIN and receives payment from the State of California.

Dept/Division/Unit Name	Complete Address

Contact Person

Title

Phone number

E-mail address

Signature

Date

CONSULTANT PROFESSIONAL SERVICES AGREEMENT
BETWEEN
THE CITY OF OXNARD AND LESAR SUPPORT SERVICES

By This Consultant Professional Services Agreement ("Agreement"), the CITY of Oxnard ("CITY") agrees to engage the services of LeSar Support Services ("CONSULTANT"), and CONSULTANT agrees to perform the services for CITY as herein described, for the compensation, during the term, and otherwise subject to the covenants and conditions herein set forth. CITY and CONSULTANT may be individually referred to as "Party" or collectively as the "Parties."

1. **SUMMARY DESCRIPTION OF SERVICES.**
    a. Negotiated Sole Source Agreement for Encampment Resolution Funding administrative grant management and implementation
2. **PARTIES.**
    a. CITY of Oxnard ("CITY"), a general law and municipal corporation of the State of California, located at 300 West Third Street, Oxnard California 93030
    b. LeSar Support Services ("CONSULTANT"), a corporation of the State of California, located at 404 Euclid Avenue, Suite 212, San Diego, CA 92114
3. **TERM OF AGREEMENT**
    a. From: 19 September 2023 To: 19 September 2024
    b. Time is of the essence in this Agreement.
    c. The CITY shall have the option for (4) four consecutive (1) one-year extensions, in accordance with the scope of work and general terms and conditions of the Consultant Professional Services Agreement. Any price increases or decreases shall be negotiated at time of contract extension.
    d. Any Optional Extension (initial term, plus any option to extend) shall not exceed a total of five (5) years. The CITY in its sole discretion may exercise the optional extension upon 60 days written notice to the SERVICE PROVIDER in accordance with Section 11 of this Agreement. SERVICE PROVIDER shall issue its written consent to the CITY's exercise of the option extension within 10 days of receipt of notice from the CITY. All Notices shall comply with Section 20 of this Agreement.
    e. All services required of CONSULTANT under this Agreement shall be completed on or before the end of the term of the Agreement.
4. **AGREEMENT AMOUNT NOT TO EXCEED:** $90,000.00
5. **AGREEMENT EXHIBITS**.
    a. The following documents memorialized below are the only exhibits to this agreement and are incorporated by reference as though fully set forth herein. In the event of a conflict between the Exhibits and this Agreement, the Agreement controls.
    b. Exhibit A: Scope of Services
    c. Exhibit B: Schedule of Compensation
    d. Exhibit C: Insurance Requirements
    e. Exhibit D: Living Wage Policy

6. **DESIGNATED REPRESENTATIVES.**

   a. The Designated Representatives listed below shall be authorized to act on behalf of the named Party, be responsible for negotiations and contractual matters, and coordinate with each other to perform the services under this Agreement. Additionally, CONSULTANT's services shall be performed or immediately supervised by the CONSULTANT's Representative:

   b.

CITY:	CONSULTANT:
Emilio Ramirez	Maureen Richey
Housing Director	Director of Programs
805.385.8094	773.505.1715
emilio.ramirez@oxnard.org	maureen@lesarsupport.com

7. **CONTRACTUAL PREREQUISITES.**

   a. This Agreement must first be executed by the CONSULTANT, after which the Agreement shall be approved as to form by the CITY Attorney, then executed by the Mayor, or an authorized person on behalf of the CITY, and if executed by the Mayor shall also be executed by the CITY Clerk.

   b. CONSULTANT is advised that any recommendation for AGREEMENT award is not binding on CITY until the AGREEMENT is fully executed and approved by CITY.

   c. A request for modification of the terms, prior to execution of the Agreement, must be made in writing and presented to the Designated Representative of the CITY prior to the time this Agreement is executed.

   d. All proof of business license, insurance, and W-9 forms is required prior to execution of this Agreement.

   e. CONSULTANT shall not perform any work under this Agreement until a proof of insurance has been provided to the City as required under Section 24 of this Agreement.

8. **CONSULTANT'S SERVICES.**

   a. CONSULTANT shall perform the tasks, obligations, and services set forth in the "Scope of Services," attached to and incorporated into this Agreement as "Exhibit A." Once this Agreement is executed, the Scope of Services may only be modified by written Amendment pursuant to Section 12 of this Agreement.

   b. The Services shall be coordinated with the designated City Project Manager set forth in Exhibit A subject to the direction of the City Manager or Department Director. CONSULTANT hereby designates its Project Manager as set forth in "Exhibit A" as the person responsible for the Services who shall coordinate with City's Project Manager in executing the scope of services under this Agreement.

9. **COMPENSATION.** CITY shall pay CONSULTANT for the services performed pursuant to the terms of this Agreement in the time and manner set forth in the "Schedule of Compensation," attached to and incorporated into this Agreement as "Exhibit B." CITY shall pay SERVICE PROVIDER an amount not to exceed the amount is listed in Section 4 of this Agreement. Once this Agreement is executed, the Schedule of Compensation may only be modified by written Amendment pursuant to Section 12 of this Agreement, and may be subject to approval by the City Council.

10. **PAYMENT & INVOICES.**

    a. The CITY shall pay all undisputed portions of any applicable invoice within forty-five (45) days after receipt of an invoice. In the event the CITY disputes one or more items in an invoice, the CITY shall, within forty-five (45) days after receipt of such invoice, notify the CONSULTANT of the item(s) being disputed and the reason(s) therefore. The CITY may withhold payment for such disputed items until resolution of the dispute.

    b. **Payment Request.** CONSULTANT shall submit a payment request to CITY by the end of each calendar month listing the Services provided, costs of those Services, and total amount due for the month. Invoices may be emailed to: invoices@oxnard.org.

    c. **Non-Appropriation of Funds.** Payments to be made to CONSULTANT by CITY for the Services performed within the current fiscal year are within the current fiscal budget and within an available, unexhausted and unencumbered appropriation of CITY. In the event CITY does not appropriate sufficient funds for payment of the Services beyond the current fiscal year, this Agreement shall cover payment for the Services only up to the conclusion of the last fiscal year in which CITY appropriated sufficient funds and shall automatically terminate at that fiscal year's conclusion.

    d. CONSULTANT's acceptance of final payment made pursuant to this Agreement shall constitute a release of CITY from all claims and liabilities for compensation to CONSULTANT for anything completed, finished or relating to the Services. CITY's payment shall not constitute nor be deemed a release of the responsibility and liability of CONSULTANT for the accuracy and competency of the information provided and/or the Services performed hereunder, nor shall such payment be deemed to be an assumption of responsibility or liability by CITY for any defect or error in the Services performed by CONSULTANT and its employees, agents and Subcontracted CONSULTANTs.

    e. CONSULTANT shall provide CITY with a completed Request for Taxpayer Identification Number and Certification, as issued by the Internal Revenue Service. If any sales tax is due for the Services performed by CONSULTANT or materials or products provided to CITY by CONSULTANT, CONSULTANT shall pay the sales tax. CITY shall not reimburse CONSULTANT for sales taxes paid by CONSULTANT.

11. **OPTION TO EXTEND AGREEMENT.** When in the CITY's best interest, this Agreement may only be extended, if the City in its discretion exercises the option to extend pursuant to Section 3.2 and 3.3 of the Agreement. The initial term, plus any option to extend, shall not exceed a total of five (5) years. **If no option to extend the Agreement appears in sections 3.2, then this Agreement shall not be extended.**

12. **MODIFICATION OF AGREEMENT.** This Agreement may be amended, modified, or otherwise altered, or its provisions waived, only upon mutual consent of the Parties by written amendment, and as authorized by the Oxnard Municipal Code, Article IV, Sections 4-59 and 4-60.

13. **TERMINATION OF AGREEMENT.** CITY may terminate this Agreement at any time, with or without cause and without penalty, upon fifteen (15) calendar days' prior written notice pursuant to Section 31 of this agreement. Such termination shall be effective on the date specified in the notice, or if no date is specified, then fifteen (15) calendar days from the date of the notice. CITY shall be liable to CONSULTANT only for work done by CONSULTANT up to and including the date of termination of this Agreement unless the termination is for cause, in which event CONSULTANT need be compensated only to the extent required by law. CONSULTANT may terminate this Agreement at any time during the term of the Agreement by giving the CITY sixty (60) calendar days' prior written notice.

14. **INDEPENDENT CONTRACTOR**

    a. CONSULTANT is and shall at all times remain, as to CITY, a wholly independent contractor. Neither CITY nor any of its employees or agents shall have control over the conduct of CONSULTANT or any of its employees, except as stated in this Agreement. CONSULTANT has and shall retain the right to exercise full control over the employment, direction, means of performance, location, compensation and discharge of all persons assisting CONSULTANT. This Agreement shall not be interpreted to prevent or preclude CONSULTANT from rendering any services for CONSULTANT's own account or to any other person or entity as CONSULTANT in its sole discretion shall determine; provided, however, that performing such services shall not materially interfere with the Services the CONSULTANT shall perform for the CITY. The CITY retains the right to provide general instructions to and observe the CONSULTANT in the performance of all services done on behalf of the CITY.

    b. CONSULTANT and its employees and agents have no authority, express or implied, to act on behalf of CITY in any capacity, to incur any debt, obligation or liability on behalf of CITY, bind CITY in any manner, or otherwise act on behalf of CITY as an agent. CONSULTANT and its employees are not employees of CITY. CONSULTANT and its employees are not entitled to receive from CITY any of the benefits or rights afforded employees of CITY, including but not limited to reserve leave, sick leave, vacation leave, holiday leave, compensatory leave, Public Employees Retirement System benefits, and health, life, dental, long-term disability and workers' compensation insurance benefits. CONSULTANT shall not, at any time or in any manner, represent that it or any of its agents or employees are in any manner agents or employees of CITY.

15. **LAWFUL PERFORMANCE.** CONSULTANT shall abide by all Federal, State, and Local Laws and Regulations as may be related to the performance of duties under this Agreement. CONSULTANT, at its sole expense, shall obtain and maintain during the term of this Agreement, all appropriate permits, licenses, and certificates that may be required in connection with the performance of services under this Agreement.

16. **SAFETY REQUIREMENTS.** CONSULTANT shall not perform any services for the CITY when the CONSULTANT is impaired by alcohol or a controlled substance. When there is reasonable cause to believe that any person has violated this provision, that person shall be immediately removed from the premises and be subject to any applicable civil and/or criminal penalties under the CITY's Code and/or under state law. All work performed under this Agreement shall be performed in such a manner as to provide safety to the public. The CITY reserves the right to issue restraining or cease and desist orders to CONSULTANT when unsafe or harmful acts are observed or reported relative to the performance of the work under this Agreement. The acceptance of CONSULTANT's work by CITY shall not operate as a release of the CONSULTANT from such standard of care and workmanship.

17. **OWNERSHIP OF CONSULTANT'S WORK PRODUCT, CONFIDENTIALITY & DISCLOSURE.**

    a. CITY shall be the owner of any and all technical documents and records, including, computations, plans, correspondence, and/or other pertinent data and information, both hard copy and electronic, gathered or prepared by CONSULTANT in performance of this Agreement and shall be entitled to immediate possession of the same upon completion of the work under this Agreement, or at any earlier or later time when the same may be requested by CITY.

b. **Records and Inspections.** The CONSULTANT shall maintain full and accurate records, with respect to all services and matters covered under this Agreement. The CITY shall have free access at all reasonable times to such records, both hard copy and electronic, and the right to examine and audit the same and to make transcripts therefrom, and to inspect all program data, documents, proceedings, and activities.

c. **Deliverables.** CONSULTANT shall deliver to the CITY the studies, plans, specifications, or other documents as are identified in the Scope of Services; and CONSULTANT shall, upon completion of all work or termination of this Agreement, submit to the CITY all information developed in the course of the CONSULTANT's services. CONSULTANT shall, in such time and in such form as the CITY may require, furnish reports concerning the status of services required under this Agreement. CONSULTANT shall, upon request by CITY and upon completion or termination of this Agreement, deliver to the CITY all material furnished to CONSULTANT by the CITY.

d. **Ownership – Generally.** All inventions, discoveries, enhancements, changes, or improvements of computer programs developed pursuant to this Agreement shall be the property of the CITY, and all patents or copyrights shall be assigned to the CITY, unless otherwise agreed. CONSULTANT agrees that CITY may make modifications to computer software furnished by CONSULTANT without infringing CONSULTANT's copyright or any license granted to CITY, unless otherwise agreed.

e. **Ownership of Documents.** Every report, draft, work product, map, record, and other document reproduced, prepared, or caused to be prepared by the CONSULTANT pursuant to or in connection with this Agreement shall be the exclusive property of the CITY.

f. **Confidentiality.** Information that is exempt from disclosure to the public is confidential. This includes information relating to the past, present, or future affairs of the CITY or information belonging to a third party whose information is in the CITY's possession or control under obligations of confidentiality. CONSULTANT may be granted access to information that is exempt from disclosure to the public (Government Code Section 6254 and 6254.16) and may contain "trade secrets" (see Government Code Section 6254.7(d)) when it is necessary for CONSULTANT to perform its obligations pursuant to this Agreement. If CONSULTANT is granted such access to confidential information, CONSULTANT shall not be considered to be a member of the public as that term is used in Government Code Section 6254.5.

g. **Disclosure of Information.** CONSULTANT shall not disclose, publish, or authorize others to disclose or publish, design data, drawings, specifications, reports, or other information pertaining to the projects assigned to CONSULTANT by the CITY or other information to which the CONSULTANT has had access during the term of this Agreement without the prior written approval of the CITY's Designated Representative during the term of this Agreement and for a period of two (2) years after the termination of this Agreement.

h. **No Warranty.** Other than an obligation upon the CITY to deal in good faith, the CITY makes no warranties and shall bear no liability or responsibility for errors or omissions in any Confidential Information disclosed under this Agreement or for any business decisions made by CONSULTANT in reliance on any Confidential Information disclosed under this Agreement.

18. **ASSIGNMENT.** This Agreement is for the professional services of CONSULTANT. Any attempt by CONSULTANT to assign the benefits or burdens of this Agreement without the prior written approval of CITY shall be prohibited and shall be null and void. CONSULTANT's services

pursuant to this Agreement shall be provided by the CONSULTANT's Designated Representative or directly under his/her supervision, and CONSULTANT shall not assign another to supervise the CONSULTANT's performance of this Agreement without the prior written approval of CITY, by and through the CITY's Designated Representative.

19. **NOTICE OF BREACH AND OPPORTUNITY TO CURE.** Neither Party will be in breach of this Agreement where the breach is capable of being cured, or until written notice of the breach is received from the non-breaching Party. The Party charged with breach will have fifteen (15) calendar days from the date of receiving such notice in which to cure the breach or otherwise respond. If the circumstances leading to the charge that the Agreement was breached have not been cured or explained to the satisfaction of the other Party within fifteen (15) days from the date on which the breaching Party received notice of breach, the non-breaching Party may terminate this Agreement. Notice shall be given in the manner set forth in section 22.

20. **NOTICE.** All notices given or required to be given pursuant to this Agreement shall be in writing and may be given by personal delivery or by first-class mail. Notice sent by mail shall be addressed to each Party's Designated Representative as set forth above in Section 6. When addressed in accordance with this Section, such notice shall be deemed given upon deposit in the United States mail, postage prepaid. In all other instances, notices shall be deemed given at the time of actual delivery. Changes may be made in the names or addresses of persons to whom notices are to be given by giving notice in the manner prescribed in this Section.

21. **COVENANTS AND CONDITIONS.** Each term and each provision of this Agreement to be performed by CONSULTANT shall be construed to be both a covenant and a condition.

22. **WAIVER.** CITY's review or acceptance of, or payment for, work product prepared by CONSULTANT under this Agreement will not be construed to operate as a waiver of any rights CITY may have under this Agreement or of any cause of action arising from CONSULTANT's performance. A waiver by CITY of any breach of any term, covenant, or condition contained in this Agreement will not be deemed to be a waiver of any subsequent breach of the same or any other term, covenant, or condition contained in this Agreement, whether of the same or different character.

23. **INDEMNIFICATION, HOLD HARMLESS & DEFENSE.**

    a. As a separate and independent covenant from CONSULTANT's obligations under this section, CONSULTANT shall to the fullest extent permitted by law, immediately defend, indemnify, and hold harmless CITY, its legislative and advisory bodies, and the CITY's officials, directors, officers, employees, and agents (the "Indemnitees") from and against all liabilities regardless of nature, type, or cause, arising out of or resulting from or in connection with CONSULTANT's performance of this Agreement or CONSULTANT's failure to comply with any of its obligations contained in this Agreement. Liabilities subject to the duties to defend and indemnify include, without limitation, all claims, losses, damages, penalties, fines, and judgments; associated investigation and administrative expenses; defense costs, including but not limited to reasonable attorneys' fees; court costs; and costs of alternative dispute resolution. CONSULTANT's obligation to indemnify applies unless it is adjudicated that any of the liabilities covered by this Section are the result of the sole active negligence or sole willful misconduct of any of the Indemnitees.

    b. The duty to defend is a separate and distinct obligation from CONSULTANT's duty to indemnify. CONSULTANT shall be obligated to defend in all legal, equitable, administrative, or special proceedings, with counsel approved by the CITY Attorney, immediately upon tender to CONSULTANT of the claim in any form or at any stage of an action or proceeding, whether or not liability is established. An allegation or determination

of negligence or willful misconduct by any of the Indemnitees shall not relieve CONSULTANT from its separate and distinct obligation to defend the Indemnitees. The obligation to defend extends through final judgment, including exhaustion of any appeals. The defense obligation includes the obligation to provide independent defense counsel if CONSULTANT asserts that liability is caused in whole or in part by the negligence or willful misconduct of the Indemnitees. If it is finally adjudicated that liability was caused by the sole active negligence or sole willful misconduct of any of the Indemnitees, CONSULTANT may submit a claim to CITY for reimbursement of reasonable attorneys' fees and defense costs.

c. The provisions of this Subsection 23.3 apply only in the event that CONSULTANT is a design professional within the meaning of California Civil Code section 2782.8 ("Design Professional"). The term Design Professional, as defined in said section, is limited to licensed architects, licensed landscape architects, registered professional engineers, professional land surveyors, and the business entities that offer such services in accordance with the applicable provisions of the California Business and Professions Code.

d. Notwithstanding the provisions of Subsections 23.1 and 23.2 above, to the extent that the services to be provided under this Agreement are those of a Design Professional, CONSULTANT's duty to indemnify, hold harmless, and defend the Indemnitees shall be limited to the extent that any claims arise out of, pertain to, or relate to the negligence, recklessness, or willful misconduct of the CONSULTANT, its officers, agents, employees or subconsultants in the performance of the services described in this Agreement.

e. In no event shall the costs of defense charged to CONSULTANT exceed the CONSULTANT's proportionate percentage of fault, except as otherwise set forth in said Civil Code section 2782.8, the provisions of which are incorporated into this Agreement by this reference. Nothing in this Subsection 23.3 shall be construed to require CONSULTANT to provide indemnification for claims caused by the active negligence or willful misconduct of the Indemnitees.

f. The review, acceptance or approval of CONSULTANT's work or work product by any of the Indemnitees shall not affect, relieve or reduce CONSULTANT's indemnification or defense obligations. CONSULTANT waives any right of contribution against CITY or any of CITY's officers, employees, agents, or volunteers arising out of such failure to inspect, review, monitor, or supervise the work performed by CONSULTANT pursuant to this Agreement. The provisions of this Section shall not be restricted by and do not affect the provisions of this Agreement relating to Section 24. The CONSULTANT's obligations under this Section of the Agreement shall survive the termination of the Agreement.

g. CONSULTANT agrees to pay all required taxes on amounts paid to CONSULTANT under this Agreement, and to indemnify and hold CITY harmless from any and all taxes, assessments, penalties, and interest asserted against CITY by reason of the independent contractor relationship created by this Agreement. CONSULTANT shall be solely responsible for, and shall save CITY harmless from, all matters relating to the payment of CONSULTANT's subcontractors, material suppliers, directors, officers, employees, agents and representatives, including compliance with social security requirements, federal and State income tax withholding, and all other regulations governing employer-employee relations, as applicable. CITY shall have the right to offset against the amount of any compensation due to CONSULTANT under this Agreement any amount due to CITY from CONSULTANT as a result of its failure to promptly pay to CITY any reimbursement or indemnification arising under this Section.

24. **INSURANCE.** CONSULTANT shall obtain and maintain during the performance of any services under this Agreement the insurance coverages listed within "Exhibit C", which is attached hereto and incorporated herein by this reference, unless the Risk Manager waives, in writing, the requirement that CONSULTANT obtain and maintain such insurance coverages. Such insurance must be issued by a company satisfactory to the Risk Manager. CONSULTANT shall, before performance of any services pursuant to this Agreement, file with the Risk Manager evidence of insurance coverage as specified in "Exhibit C". Maintenance of insurance coverages by CONSULTANT is a material element of this Agreement. CONSULTANT'S failure to maintain or renew insurance coverages or to provide renewal evidence shall be considered a material breach of this Agreement.

25. **LIVING WAGE REQUIREMENTS**. During the term of this Agreement, CONSULTANT understands and agrees that if Living Wages are applicable, subject to the 2002 Oxnard City Council Living Wage Policy, attached as "Exhibit D" to this Agreement, CONSULTANT will pay and/or provide the wages and/or benefits required therein to all of its employees engaged in whole or in part in performing the services provided for by this Agreement. The duty to pay the correct wage is the responsibility of the CONSULTANT.

26. **PREVAILING WAGE REQUIREMENTS.**

    a. **Application.** The payment of State prevailing wages as designated for Ventura County shall apply to public works projects. However, this section shall not apply to work performed on a public works project of twenty-five thousand dollars ($25,000) or less when the project is for construction, alteration, demolition, installation, or repair work; or to work performed on a public works project of fifteen thousand dollars ($15,000) or less when the project is for maintenance work. Prevailing wages are required to be paid to all workers, including subcontracted employees.

    b. **Compliance with California Department of Industrial Relations (DIR).** To determine if this Agreement is subject to compliance monitoring and enforcement, go to: https://www.dir.ca.gov/Public-Works/PublicWorksSB854FAQ.html

    c. **Contract Splitting.** It is unlawful to split, or separate into small portions, work orders, projects, purchases, or public works projects for the purpose of evading these prevailing wage requirements.

    d. **Use of Prevailing Wages vs. Living Wages.** In the event that there is a difference between the amount of wages to be paid under the CITY of Oxnard's local Living Wage requirements and the requirements of this provision, the wage rate that is the higher of the two shall be applicable to this Agreement. The duty to pay the correct wage is the responsibility of the CONSULTANT.

27. **CONFLICT OF INTEREST** CONSULTANT covenants that it does not have any interest, nor shall it acquire any interest, directly or indirectly, which would conflict in any manner with the performance of CONSULTANT's services under this Agreement. CONSULTANT further covenants that in the performance of services under this Agreement, no officer, employee or agent of CONSULTANT having such interest shall be employed by it. In the event the CITY determines that CONSULTANT must disclose its financial interests by completing and filing a Fair Political Practices Commission Form 700, Statement of Economic Interests, CONSULTANT shall file such Form 700 with the CITY Clerk's Office pursuant to the written instructions provided by the CITY Clerk. Acquisition or maintenance of a conflicting interest by CONSULTANT may result in termination of this Agreement by the CITY.

28. **DISPUTES.** Except as otherwise provided in these provisions, any dispute concerning a question of fact arising under this Agreement, shall be decided by the CITY's Designated

Representative, who shall reduce this decision to writing and mail a copy to the CONSULTANT. The decision of the CITY's Designated Representative shall be final and conclusive unless CONSULTANT requests mediation within ten (10) calendar days. Pending final decision of a dispute, the CONSULTANT shall proceed diligently with the performance of the Agreement and in accordance with the decision of the CITY's Designated Representative.

29. **DISPUTE RESOLUTION.** Should an unresolved dispute arise out of this Agreement, any Party may request that it be submitted to mediation. The Parties shall meet in mediation within a reasonable time not to exceed forty-five (45) days of a request. The mediator shall be agreed to by the mediating Parties. In the absence of an agreement on a mediator, the Parties shall each submit one name from mediators listed by the American Arbitration Association, the California State Board of Mediation and Conciliation, or other agreed-upon service. The mediator shall be selected by a "blindfold" process. The cost of mediation shall be borne equally by both Parties. Neither Party shall be deemed the prevailing Party. No Party shall be permitted to file a legal action without first meeting in mediation and making a good faith attempt to reach a mediated settlement. The mediation process, once commenced by a meeting with the mediator, shall last until agreement is reached by the Parties but not more than sixty (60) calendar days, unless the maximum time is extended in writing by both Parties.

30. **AUDIT.** CITY shall have the option of inspecting, auditing and/or reproducing all records and other written materials: used by CONSULTANT in preparing its billings to CITY as a condition precedent to any payment to CONSULTANT; or for other purposes relating to the Agreement. CONSULTANT will promptly furnish all documents requested by CITY. Additionally, if this Agreement is in excess of $10,000, the State Auditor may examine and audit CONSULTANT for a period of 3 years after final payment under the Agreement. Regardless of whether a State audit is permitted, CONSULTANT shall maintain and preserve all such records for a period of at least 3 years after final payment under the Agreement or until an audit has been completed and accepted by CITY, whichever occurs later. CONSULTANT shall maintain all such records in CITY or to promptly reimburse CITY for all reasonable costs incurred in conducting the audit at a location other than in CITY, including but not limited to expenses for personnel, salaries, private auditor, travel, lodging, meals and overhead. CONSULTANT shall include a copy of this Section in all contracts with its subcontractors, and CONSULTANT shall be responsible for immediately obtaining those records or other written material from its subcontractors upon a request by the State Auditor and/or CITY.

31. **ADVERTISING AND PUBLICITY** CONSULTANT shall not use the name of or refer to CITY directly or indirectly in any advertisement, news release, or professional or trade publication without prior written approval from the CITY Manager. This Section shall survive the termination of this Agreement.

32. **NONDISCRIMINATORY EMPLOYMENT.** CONSULTANT shall not unlawfully discriminate against any individual based on race, color, religion or religious creed, national origin, ancestry, ethnic group identification, primary language, physical disability, mental disability, medical condition, genetic information, marital status, gender, gender identity, gender expression, sex, sexual orientation, age, immigration status, citizenship or military and veteran status. CONSULTANT understands and agrees that it is bound by and will comply with all legal nondiscrimination mandates. For every subcontractor who will perform Services, CONSULTANT shall be responsible for such subcontractor's compliance with this Section.

33. **FORCE MAJEURE.** Neither the CONSULTANT nor the CITY shall be responsible for any delay caused by any contingency beyond their control, including, but not limited to, war or insurrection, walkouts by the Party's own employees, fires, natural calamities, riots, or demands or requirements of governmental agencies other than the CITY.

34. **GOVERNING LAW.** The terms of this Agreement shall be interpreted according to the laws of the State of California. Should litigation occur, venue shall be in the Superior Court of California, County of Ventura.

35. **SEVERABILITY.** If any portion of this Agreement is declared by a court of competent jurisdiction to be invalid or unenforceable, then such portion will be deemed modified to the extent necessary in the opinion of the court to render such portion enforceable and, as so modified, such portion and the balance of this Agreement will continue in full force and effect and be enforceable.

36. **INTEGRATED AGREEMENT.** This Agreement and the attached exhibits referenced herein to this Agreement represent the entire understanding between the Parties. No verbal agreement or implied covenant shall be held to vary the provisions of this Agreement. This Agreement shall bind and inure to the benefit of the Parties to this Agreement and any subsequent successors and assigns.

37. **NO THIRD-PARTY BENEFICIARY.** This Agreement shall not be construed to be an agreement for the benefit of any third-party or parties, and no third party or parties shall have any claim or right of action under this Agreement.

38. **AUTHORITY TO EXECUTE.** Each Party hereto expressly warrants and represents that through its Designated Representative it has the authority to execute this Agreement on behalf of its corporation, partnership, business entity, or governmental entity, and warrants and represents that the Designated Representative has the authority to bind each Party to the performance of its obligations hereunder.

39. **EXECUTION – COUNTERPARTS.** This Agreement may be executed in any number of counterparts and each such duplicate counterpart shall constitute an original, but they shall not be effective nor enforceable unless and until it is executed with the handwritten signature of an authorized representative of each of the relevant Parties. No counterpart shall be deemed to be an original or presumed delivered unless and until the counterpart executed by the other Party to this Agreement is in the physical possession of the Party seeking enforcement thereof.

40. **INCONSISTENT OR CONFLICTING TERMS.** In the event of any contradictions or inconsistencies between any attached documents or exhibits incorporated by reference herein and the provisions of the Agreement itself, the terms of the Agreement shall control. Any exhibit that is attached and incorporated by reference shall be limited to the purposes for which it is attached, as specified in this Agreement. Any contractual terms or conditions contained in such exhibit imposing additional obligations on the CITY are not binding upon the CITY's Designated Representative unless specifically agreed to in writing, and initiated by CITY's Designated Representative, as to each additional contractual term or condition.

41. **CAPTIONS AND HEADINGS.** The captions and headings contained in this Agreement are provided for identification purposes only and shall not be interpreted to limit or define the content, scope, or intent of the provisions described under the respective caption or heading.

42. **ACKNOWLEDGEMENT.** By signing below, CONSULTANT acknowledges that it has reviewed the CITY's CONSULTANT/Professional Services Agreement terms and conditions and insurance requirements and that CONSULTANT hereby agrees to full compliance.

[Signatures on next page]

In witness whereof, the Parties have entered into this Agreement effective on the date as written in section 3 and upon signature of all Parties.

CITY OF OXNARD

John Zaragoza, Mayor — Date
Alexander Nguyen, City Manager
Lisa Boerner, Purchasing Manager
Buyer

ATTEST:

Rose Chaparro, City Clerk — Date

APPROVED AS TO FORM

Stephen M. Fischer, City Attorney — Date

CONSULTANT

Richard Valdez — 8/24/2023

Richard Valdez,
Chief Operations Officer — Date

EXHIBIT A

CONSULTANT/PROFESSIONAL SERVICE AGREEMENT

(CITY of Oxnard and LeSar Support Services)

SCOPE OF SERVICES

Project Managers for this Agreement include:

CITY:	CONSULTANT:
Emilio Ramirez	Maureen Richey
Housing Director	Director of Programs
805.385.8094	773.505.1715
emilio.ramirez@oxnard.org	maureen@lesarsupport.co

The City of Oxnard is seeking the interim services of a contract grant administrator to support the City's implementation of an Encampment Resolution Funding Grant as they hire permanent City staff. The grant, in the amount of $4,000,000 from the State of California, funds "actionable, person-centered local proposals that resolve the experience of unsheltered homelessness for people residing in encampments" and comply with the Housing First principles codified in Welfare and Institutions Code Section 8255.

The City of Oxnard's program prioritizes two encampments within the City of Oxnard – at 5th Street and Harbor Ave and Ormand Beach – currently estimated to have an unsheltered population of 75 individuals. The City proposes to provide interim shelter, case management support, and permanent housing navigation and placement for 100% of clients. Interim shelter may include motel vouchers.

Safety

All work conducted by the CONSULTANT and its representative shall conform to current applicable California Occupational Safety and Health Administration (CAL-OSHA) laws and regulations. CONSULTANT shall maintain safety certifications and provide CITY with copies of training records.

CONSULTANT must strive to maintain good public relations at all times. The work must be conducted in a manner, which will cause the least possible interference and annoyance to the public. Work must be performed by competent employees and supervised by an experienced, foreman or supervisor.

Accident Reporting

CONSULTANT shall immediately notify the CITY of any accident, regardless of whether or not injury or damage is evident, involving the CONSULTANT's staff, vehicles, or equipment while on the work site. CONSULTANT shall take photo documentation of damage and immediately report to appropriate CITY contact. CONSULTANT shall document any damage that exists before the onset of work. The CONSULTANT shall take photographs of existing damage and report to appropriate CITY contact prior to commencing any work. Any damage caused as a result of the CONSULTANT's actions shall be the sole responsibility of the CONSULTANT to repair or pay in full for damages.

Record Keeping

CONSULTANT shall maintain and provide records of all works completed per this Agreement.

Invoicing/Billing

Invoicing for services rendered are required for proper payment. The work must be identified on the invoice.

EXHIBIT B

CONSULTANT PROFESSIONAL SERVICE AGREEMENT

(CITY of Oxnard and LeSar Support Services)

SCHEDULE OF COMPENSATION

Provide administrative grant management regarding the City's implementation of the Encampment Resolution Funding Grant. Tasks include but are not limited to: 1.1 Negotiate and enter into agreements with service providers (public and private) 1.2 Negotiate and enter in agreements with motels for interim non-congregate shelter. 1.3 Coordinate and support project partners and city staff on completion and submission of funder grant reports for progress and final close out documentation (if appropriate) 1.4 Oversee and administer draw requests and fund management. 1.5 Review processes and policies for compliance with grant requirements.	Duration/Timeline: until allowance of $88,400 is expended and/or new staff is hired.
Administrative Support (0.25 FTE for 12 months @ $170 per hour)	$88,400
Contract Administration	$1,600
TOTAL (not to exceed)	$90,000

2023 Billing Rates

Effective 1/1/2023

Staff Level	Billing Rate
President & CEO	$340
Senior Principal	$310
Principal – Level 3	$285
Principal – Level 2	$270
Principal – Level 1	$260
Senior Associate – Level 3	$205
Senior Associate – Level 2	$195
Senior Associate – Level 1	$180

Associate – Level 3	$170
Associate – Level 2	$160
Associate – Level 1	$150
Research Analyst	$110
Intern	$100
Sr. Graphic Designer	$185
Jr. Graphic Designer	$115

*Rates will increase approximately 3% per year beginning January 1, 2024.

EXHIBIT C

CONSULTANT PROFESSIONAL SERVICES AGREEMENT

(CITY of Oxnard and LeSar Support Services)

INSURANCE REQUIREMENTS

Prior to contract approval, CONSULTANT/SERVICE PROVIDER/SELLER/BIDDER (hereafter referred to as "CONSULTANT") must procure, agree to maintain and supply evidence of insurance at the levels listed and in accordance with the other provisions listed in this document.

LESADEV-01 PEDENN

CERTIFICATE OF LIABILITY INSURANCE

DATE (MM/DD/YYYY) 8/22/2023

THIS CERTIFICATE IS ISSUED AS A MATTER OF INFORMATION ONLY AND CONFERS NO RIGHTS UPON THE CERTIFICATE HOLDER. THIS CERTIFICATE DOES NOT AFFIRMATIVELY OR NEGATIVELY AMEND, EXTEND OR ALTER THE COVERAGE AFFORDED BY THE POLICIES BELOW. THIS CERTIFICATE OF INSURANCE DOES NOT CONSTITUTE A CONTRACT BETWEEN THE ISSUING INSURER(S), AUTHORIZED REPRESENTATIVE OR PRODUCER, AND THE CERTIFICATE HOLDER.

IMPORTANT: If the certificate holder is an ADDITIONAL INSURED, the policy(ies) must have ADDITIONAL INSURED provisions or be endorsed. If SUBROGATION IS WAIVED, subject to the terms and conditions of the policy, certain policies may require an endorsement. A statement on this certificate does not confer rights to the certificate holder in lieu of such endorsement(s).

PRODUCER License # 0E67768
IOA Insurance Services
16000 Ventura Blvd.
Suite 550
Encino, CA 91436

CONTACT NAME: Nikki Peden
PHONE (A/C, No, Ext): (323) 951-4208 54208 FAX (A/C, No):
E-MAIL ADDRESS: Nikki.Peden@ioausa.com

INSURER(S) AFFORDING COVERAGE	NAIC #
INSURER A : Citizens Insurance Company of America	31534
INSURER B : Allmerica Financial Benefit Insurance Company	41840
INSURER C : Hartford Casualty Insurance Company	29424
INSURER D :	
INSURER E :	
INSURER F :	

INSURED
LeSar Development Consultants
404 Euclid Ave, Ste 212
San Diego, CA 92114

COVERAGES CERTIFICATE NUMBER: REVISION NUMBER:

THIS IS TO CERTIFY THAT THE POLICIES OF INSURANCE LISTED BELOW HAVE BEEN ISSUED TO THE INSURED NAMED ABOVE FOR THE POLICY PERIOD INDICATED. NOTWITHSTANDING ANY REQUIREMENT, TERM OR CONDITION OF ANY CONTRACT OR OTHER DOCUMENT WITH RESPECT TO WHICH THIS CERTIFICATE MAY BE ISSUED OR MAY PERTAIN, THE INSURANCE AFFORDED BY THE POLICIES DESCRIBED HEREIN IS SUBJECT TO ALL THE TERMS, EXCLUSIONS AND CONDITIONS OF SUCH POLICIES. LIMITS SHOWN MAY HAVE BEEN REDUCED BY PAID CLAIMS.

INSR LTR	TYPE OF INSURANCE	ADDL INSD	SUBR WVD	POLICY NUMBER	POLICY EFF (MM/DD/YYYY)	POLICY EXP (MM/DD/YYYY)	LIMITS	
A	X COMMERCIAL GENERAL LIABILITY						EACH OCCURRENCE	$ 2,000,000
	CLAIMS-MADE X OCCUR	X		OB3D98011805	7/19/2023	7/19/2024	DAMAGE TO RENTED PREMISES (Ea occurrence)	$ 100,000
							MED EXP (Any one person)	$ 10,000
							PERSONAL & ADV INJURY	$ 2,000,000
	GEN'L AGGREGATE LIMIT APPLIES PER:						GENERAL AGGREGATE	$ 4,000,000
	POLICY PRO-JECT LOC						PRODUCTS - COMP/OP AGG	$ 4,000,000
	OTHER:							$
B	AUTOMOBILE LIABILITY						COMBINED SINGLE LIMIT (Ea accident)	$ 1,000,000
	X ANY AUTO			AW3H00328405	7/19/2023	7/19/2024	BODILY INJURY (Per person)	$
	OWNED AUTOS ONLY / SCHEDULED AUTOS						BODILY INJURY (Per accident)	$
	HIRED AUTOS ONLY / NON-OWNED AUTOS ONLY						PROPERTY DAMAGE (Per accident)	$
								$
A	X UMBRELLA LIAB / X OCCUR			OB3D98011805	7/19/2023	7/19/2024	EACH OCCURRENCE	$ 2,000,000
	EXCESS LIAB / CLAIMS-MADE						AGGREGATE	$
	DED / RETENTION $							$
C	WORKERS COMPENSATION AND EMPLOYERS' LIABILITY						PER STATUTE / OTH-ER	
	ANY PROPRIETOR/PARTNER/EXECUTIVE OFFICER/MEMBER EXCLUDED? (Mandatory in NH) Y / N	N / A		72WECAX6R2J	7/19/2023	7/19/2024	E.L. EACH ACCIDENT	$ 1,000,000
	If yes, describe under DESCRIPTION OF OPERATIONS below						E.L. DISEASE - EA EMPLOYEE	$ 1,000,000
							E.L. DISEASE - POLICY LIMIT	$ 1,000,000

DESCRIPTION OF OPERATIONS / LOCATIONS / VEHICLES (ACORD 101, Additional Remarks Schedule, may be attached if more space is required)
Certificate holder is listed as additional insured when required by written contract.

CERTIFICATE HOLDER

City of Oxnard
300 West Third Street
Oxnard, CA 93030

CANCELLATION

SHOULD ANY OF THE ABOVE DESCRIBED POLICIES BE CANCELLED BEFORE THE EXPIRATION DATE THEREOF, NOTICE WILL BE DELIVERED IN ACCORDANCE WITH THE POLICY PROVISIONS.

AUTHORIZED REPRESENTATIVE

ACORD 25 (2016/03)

© 1988-2015 ACORD CORPORATION. All rights reserved.
The ACORD name and logo are registered marks of ACORD

Policy Number: OB3D98011805

THIS ENDORSEMENT CHANGES THE POLICY. PLEASE READ IT CAREFULLY.

BUSINESSOWNERS LIABILITY SPECIAL BROADENING ENDORSEMENT

This endorsement modifies insurance provided under the following:

BUSINESSOWNERS COVERAGE FORM

SUMMARY OF COVERAGES	Limits	Page
1. Additional Insured by Contract, Agreement or Permit	Included	1
2. Additional Insured - Broad Form Vendors	Included	2
3. Alienated Premises	Included	3
4. Broad Form Property Damage - Borrowed Equipment, Customers Goods and Use of Elevators	Included	3
5. Incidental Malpractice (Employed Nurses, EMT's and Paramedics)	Included	3
6. Personal and Advertising Injury - Broad Form	Included	4
7. Product Recall Expense	Included	4
Product Recall Expense Each Occurrence Limit	$25,000 Occurrence	5
Product Recall Expense Aggregate Limit	$50,000 Aggregate	5
Product Recall Deductible	$500	5
8. Unintentional Failure to Disclose Hazards	Included	6
9. Unintentional Failure to Notify	Included	6

This endorsement amends coverages provided under the Businessowners Coverage Form through new coverages and broader coverage grants. This coverage is subject to the provisions applicable to the Businessowners Coverage Form, except as provided below.

The following changes are made to **SECTION II - LIABILITY:**

1. Additional Insured by Contract, Agreement or Permit

The following is added to **SECTION II - LIABILITY, C. Who Is An Insured:**

Additional Insured by Contract, Agreement or Permit

a. Any person or organization with whom you agreed in a written contract, written agreement or permit to add such person or organization as an additional insured on your policy is an additional insured only with respect to liability for "bodily injury", "property damage", or "personal and advertising injury" caused, in whole or in part, by your acts or omissions, or the acts or omissions of those acting on your behalf, but only with respect to:

(1) "Your work" for the additional insured(s) designated in the contract, agreement or permit;

(2) Premises you own, rent, lease or occupy; or

(3) Your maintenance, operation or use of equipment leased to you.

b. The insurance afforded to such additional insured described above:

(1) Only applies to the extent permitted by law; and

(2) Will not be broader than the insurance which you are required by the contract, agreement or permit to provide for such additional insured.

(3) Applies on a primary basis if that is required by the written contract, written agreement or permit.

(4) Will not be broader than coverage provided to any other insured.

(5) Does not apply if the "bodily injury", "property damage" or "personal and advertising injury" is otherwise excluded from coverage under this Coverage Part, including any endorsements thereto.

 Includes copyrighted materials of Insurance Services Offices, Inc., with its permission.

c. This provision does not apply:

(1) Unless the written contract or written agreement was executed or permit was issued prior to the "bodily injury", "property damage", or "personal injury and advertising injury".

(2) To any person or organization included as an insured by another endorsement issued by us and made part of this Coverage Part.

(3) To any lessor of equipment:

(a) After the equipment lease expires; or

(b) If the "bodily injury", "property damage", "personal and advertising injury" arises out of sole negligence of the lessor.

(4) To any:

(a) Owners or other interests from whom land has been leased if the "occurrence" takes place or the offense is committed after the lease for the land expires; or

(b) Managers or lessors of premises if:

(i) The "occurrence" takes place or the offense is committed after you cease to be a tenant in that premises; or

(ii) The "bodily injury", "property damage", "personal injury" or "advertising injury" arises out of structural alterations, new construction or demolition operations performed by or on behalf of the manager or lessor.

(5) To "bodily injury", "property damage" or "personal and advertising injury" arising out of the rendering of or the failure to render any professional services.

This exclusion applies even if the claims against any insured allege negligence or other wrongdoing in the supervision, hiring, employment, training or monitoring of others by that insured, if the "occurrence" which caused the "bodily injury" or "property damage" or the offense which caused the "personal and advertising injury" involved the rendering of or failure to render any professional services by or for you.

d. With respect to the insurance afforded to these additional insureds, the following is added to **SECTION II - LIABILITY, D. Liability and Medical Expense Limits of Insurance**:

The most we will pay on behalf of the additional insured for a covered claim is the lesser of the amount of insurance:

1. Required by the contract, agreement or permit described in Paragraph **a.;** or

2. Available under the applicable Limits of Insurance shown in the Declarations.

This endorsement shall not increase the applicable Limits of Insurance shown in the Declarations

e. All other insuring agreements, exclusions, and conditions of the policy apply.

2. Additional Insured - Broad Form Vendors

The following is added to **SECTION II - LIABILITY, C. Who Is An Insured:**

Additional Insured - Broad Form Vendors

a. Any person or organization that is a vendor with whom you agreed in a written contract or written agreement to include as an additional insured under this Coverage Part is an insured, but only with respect to liability for "bodily injury" or "property damage" arising out of "your products" which are distributed or sold in the regular course of the vendor's business.

b. The insurance afforded to such vendor described above:

(1) Only applies to the extent permitted by law;

(2) Will not be broader than the insurance which you are required by the contract or agreement to provide for such vendor;

(3) Will not be broader than coverage provided to any other insured; and

(4) Does not apply if the "bodily injury", "property damage" or "personal and advertising injury" is otherwise excluded from coverage under this Coverage Part, including any endorsements thereto

c. With respect to insurance afforded to such vendors, the following additional exclusions apply:

The insurance afforded to the vendor does not apply to:

(1) "Bodily injury" or "property damage" for which the vendor is obligated to pay damages by reasons of the assumption of liability in a contract or agreement. This exclusion does not apply to liability for damages that the insured would have in the absence of the contract or agreement;

(2) Any express warranty unauthorized by you;

(3) Any physical or chemical change in the product made intentionally by the vendor;

(4) Repackaging, unless unpacked solely for the purpose of inspection, demonstration, testing, or the substitution of parts under instruction from the manufacturer, and then repackaged in the original container;

(5) Any failure to make such inspection, adjustments, tests or servicing as the vendor has agreed to make or normally undertakes to make in the usual course of business in connection with the sale of the product;

(6) Demonstration, installation, servicing or repair operations, except such operations performed at the vendor's premises in connection with the sale of the product;

(7) Products which, after distribution or sale by you, have been labeled or relabeled or used as a container, part or ingredient of any other thing or substance by or for the vendor;

(8) "Bodily injury" or "property damage" arising out of the sole negligence of the vendor for its own acts or omissions or those of its employees or anyone else acting on its behalf. However, this exclusion does not apply to:

(a) The exceptions contained within the exclusion in subparagraphs **(4)** or **(6)** above; or

(b) Such inspections, adjustments, tests or servicing as the vendor has agreed to make or normally undertakes to make in the usual course of business, in connection with the distribution or sale of the products.

(9) "Bodily injury" or "property damage" arising out of an "occurrence" that took place before you have signed the contract or agreement with the vendor.

(10) To any person or organization included as an insured by another endorsement issued by us and made part of this Coverage Part.

(11) Any insured person or organization, from whom you have acquired such products, or any ingredient, part or container, entering into, accompanying or containing such products.

d. With respect to the insurance afforded to these vendors, the following is added to **SECTION II - LIABILITY, D. Liability and Medical Expense Limits of Insurance**:

The most we will pay on behalf of the vendor for a covered claim is the lesser of the amount of insurance:

1. Required by the contract or agreement described in Paragraph **a.**; or

2. Available under the applicable Limits of Insurance shown in the Declarations;

This endorsement shall not increase the applicable Limits of Insurance shown in the Declarations.

3. Alienated Premises

SECTION II - LIABILITY, B. Exclusions, 1. Applicable To Business Liability Coverage k. Damage to Property, paragraph **(2)** is replaced by the following:

(2) Premises you sell, give away or abandon, if the "property damage" arises out of any part of those premises and occurred from hazards that were known by you, or should have reasonably been known by you, at the time the property was transferred or abandoned.

4. Broad Form Property Damage - Borrowed Equipment, Customers Goods, Use of Elevators

a. The following is added to **SECTION II - LIABILITY, B. Exclusions, 1. Applicable To Business Liability Coverage, k. Damage to Property**:

Paragraph **(4)** does not apply to "property damage" to borrowed equipment while at a jobsite and not being used to perform operations.

Paragraph **(3), (4)** and **(6)** do not apply to "property damage" to "customers goods" while on your premises nor to the use of elevators.

b. For the purposes of this endorsement, the following definition is added to **SECTION II - LIABILITY, F. Liability and Medical Expenses Definitions:**

1. "Customers goods" means property of your customer on your premises for the purpose of being:

a. Worked on; or

b. Used in your manufacturing process.

c. The insurance afforded under this provision is excess over any other valid and collectible property insurance (including deductible) available to the insured whether primary, excess, contingent or on any other basis.

5. Incidental Malpractice - Employed Nurses, EMT's and Paramedics

SECTION II - LIABILITY, C. Who Is An Insured, paragraph **2.a.(1)(d)** does not apply to a nurse,

emergency medical technician or paramedic employed by you if you are not engaged in the business or occupation of providing medical, paramedical, surgical, dental, x-ray or nursing services.

6. Personal Injury - Broad Form

a. SECTION II - LIABILITY, B. Exclusions, 2. Additional Exclusions Applicable only to "Personal and Advertising Injury", paragraph **e.** is deleted.

b. SECTION II - LIABILITY, F. Liability and Medical Expenses Definitions, 14. "Personal and advertising injury", paragraph **b.** is replaced by the following:

b. Malicious prosecution or abuse of process.

c. The following is added to **SECTION II - LIABILITY, F. Liability and Medical Expenses Definitions,** Definition **14.** "Personal and advertising injury":

"Discrimination" (unless insurance thereof is prohibited by law) that results in injury to the feelings or reputation of a natural person, but only if such "discrimination" is:

(1) Not done intentionally by or at the direction of:

(a) The insured;

(b) Any officer of the corporation, director, stockholder, partner or member of the insured; and

(2) Not directly or indirectly related to an "employee", not to the employment, prospective employment or termination of any person or persons by an insured.

d. For purposes of this endorsement, the following definition is added to **SECTION II - LIABILITY, F. Liability and Medical Expenses Definitions:**

1. "Discrimination" means the unlawful treatment of individuals based upon race, color, ethnic origin, gender, religion, age, or sexual preference. "Discrimination" does not include the unlawful treatment of individuals based upon developmental, physical, cognitive, mental, sensory or emotional impairment or any combination of these.

e. This coverage does not apply if liability coverage for "personal and advertising injury" is excluded either by the provisions of the Coverage Form or any endorsement thereto.

7. Product Recall Expense

a. SECTION II - LIABILITY, B. Exclusions, 1. Applicable To Business Liability Coverage, o. Recall of Products, Work or Impaired Property is replaced by the following:

o. Recall of Products, Work or Impaired Property

Damages claimed for any loss, cost or expense incurred by you or others for the loss of use, withdrawal, recall, inspection, repair, replacement, adjustment, removal or disposal of:

(1) "Your product";

(2) "Your work"; or

(3) "Impaired property";

If such product, work or property is withdrawn or recalled from the market or from use by any person or organization because of a known or suspected defect, deficiency, inadequacy or dangerous condition in it, but this exclusion does not apply to "product recall expenses" that you incur for the "covered recall" of "your product".

However, the exception to the exclusion does not apply to "product recall expenses" resulting from:

(4) Failure of any products to accomplish their intended purpose;

(5) Breach of warranties of fitness, quality, durability or performance;

(6) Loss of customer approval, or any cost incurred to regain customer approval;

(7) Redistribution or replacement of "your product" which has been recalled by like products or substitutes;

(8) Caprice or whim of the insured;

(9) A condition likely to cause loss of which any insured knew or had reason to know at the inception of this insurance;

(10) Asbestos, including loss, damage or clean up resulting from asbestos or asbestos containing materials; or

(11) Recall of "your products" that have no known or suspected defect solely because a known or suspected defect in another of "your products" has been found.

b. The following is added to **SECTION II - LIABILITY, C. Who Is An Insured,** paragraph **3.b.**:

"Product recall expense" arising out of any withdrawal or recall that occurred before you acquired or formed the organization.

c. The following is added to **SECTION II - LIABILITY, D. Liability and Medical Expenses Limits of Insurance**:

Product Recall Expense Limits of Insurance

a. The Limits of Insurance shown in the SUMMARY OF COVERAGES of this endorsement and the rules stated below fix the most that we will pay under this Product Recall Expense Coverage regardless of the number of:

(1) Insureds;

(2) "Covered Recalls" initiated; or

(3) Number of "your products" withdrawn.

b. The Product Recall Expense Aggregate Limit is the most that we will reimburse you for the sum of all "product recall expenses" incurred for all "covered recalls" initiated during the policy period.

c. The Product Recall Each Occurrence Limit is the most we will pay in connection with any one defect or deficiency.

d. All "product recall expenses" in connection with substantially the same general harmful condition will be deemed to arise out of the same defect or deficiency and considered one "occurrence".

e. Any amount reimbursed for "product recall expenses" in connection with any one "occurrence" will reduce the amount of the Product Recall Expense Aggregate Limit available for reimbursement of "product recall expenses" in connection with any other defect or deficiency.

f. If the Product Recall Expense Aggregate Limit has been reduced by reimbursement of "product recall expenses" to an amount that is less than the Product Recall Expense Each Occurrence Limit, the remaining Aggregate Limit is the most that will be available for reimbursement of "product recall expenses" in connection with any other defect or deficiency.

g. Product Recall Deductible

We will only pay for the amount of "product recall expenses" which are in excess of the $500 Product Recall Deductible. The Product Recall Deductible applies separately to each "covered recall". The limits of insurance will not be reduced by the amount of this deductible.

We may, or will if required by law, pay all or any part of any deductible amount, if applicable. Upon notice of our payment of a deductible amount, you shall promptly reimburse us for the part of the deductible amount we paid.

The Product Recall Expense Limits of Insurance apply separately to each consecutive annual period and to any remaining period of less than 12 months, starting with the beginning of the policy period shown in the Declarations, unless the policy period is extended after issuance for an additional period of less than 12 months. In that case, the additional period will be deemed part of the last preceding period for the purposes of determining the Limits of Insurance.

d. The following is added to **SECTION II - LIABILITY, E. Liability and Medical Expense General Conditions, 2. Duties in the Event of Occurrence, Offense, Claim or Suit**:

You must see to it that the following are done in the event of an actual or anticipated "covered recall" that may result in "product recall expense":

(1) Give us prompt notice of any discovery or notification that "your product" must be withdrawn or recalled. Include a description of "your product" and the reason for the withdrawal or recall;

(2) Cease any further release, shipment, consignment or any other method of distribution of like or similar products until it has been determined that all such products are free from defects that could be a cause of loss under this insurance.

e. For the purposs of this endorsement, the following definitions are added to **SECTION II - LIABILITY, F. Liability and Medical Expenses Definitions:**

1. "Covered recall" means a recall made necessary because you or a government body has determined that a known or suspected defect, deficiency, inadequacy, or dangerous condition in "your product" has resulted or will result in "bodily injury" or "property damage".

2. "Product recall expense(s)" means:

a. Necessary and reasonable expenses for:

(1) Communications, including radio or television announcements or printed advertisements including stationary, envelopes and postage;

 Includes copyrighted materials of Insurance Services Offices, Inc., with its permission.

(2) Shipping the recalled products from any purchaser, distributor or user to the place or places designated by you;

(3) Remuneration paid to your regular "employees" for necessary overtime;

(4) Hiring additional persons, other than your regular "employees";

(5) Expenses incurred by "employees" including transportation and accommodations;

(6) Expenses to rent additional warehouse or storage space;

(7) Disposal of "your product", but only to the extent that specific methods of destruction other than those employed for trash discarding or disposal are required to avoid "bodily injury" or "property damage" as a result of such disposal,

you incur exclusively for the purpose of recalling "your product"; and

b. Your lost profit resulting from such "covered recall".

f. This Product Recall Expense Coverage does not apply:

(1) If the "products - completed operations hazard" is excluded from coverage under this Coverage Part including any endorsement thereto; or

(2) To "product recall expense" arising out of any of "your products" that are otherwise excluded from coverage under this Coverage Part including endorsements thereto.

8. Unintentional Failure to Disclose Hazards

The following is added to **SECTION II - LIABILITY, E. Liability and Medical Expenses General Conditions:**

Representations

We will not disclaim coverage under this Coverage Part if you fail to disclose all hazards existing as of the inception date of the policy provided such failure is not intentional.

9. Unintentional Failure to Notify

The following is added to **SECTION II - LIABILITY, E. Liability and Medical Expenses General Conditions, 2. Duties in the Event of Occurrence, Offense, Claim or Suit:**

Your rights afforded under this Coverage Part shall not be prejudiced if you fail to give us notice of an "occurrence", offense, claim or "suit", solely due to your reasonable and documented belief that the "bodily injury", "property damage" or "personal and advertising injury" is not covered under this Policy.

ALL OTHER TERMS, CONDITIONS, AND EXCLUSIONS REMAIN UNCHANGED.

 Includes copyrighted materials of Insurance Services Offices, Inc., with its permission.

insured's rights against all those other insurers.

c. When this insurance is excess over other insurance, we will pay only our share of the amount of the loss, if any, that exceeds the sum of:

(1) The total amount that all such other insurance would pay for the loss in the absence of this insurance; and

(2) The total of all deductible and self-insured amounts under all that other insurance.

d. We will share the remaining loss, if any, with any other insurance that is not described in this provision and was not bought specifically to apply in excess of the Limits of Insurance shown in the Declarations for this Coverage.

e. Method of Sharing

If all of the other insurance permits contribution by equal shares, we will follow this method also. Under this approach each insurer contributes equal amounts until it has paid its applicable Limit of Insurance or none of the loss remains, whichever comes first.

If any of the other insurance does not permit contribution by equal shares, we will contribute by limits. Under this method, each insurer's share is based on the ratio of its applicable Limit of Insurance to the total applicable limits of insurance of all insurers.

f. When this insurance is excess, we will have no duty under Business Liability Coverage to defend any claim or "suit" that any other insurer has a duty to defend. If no other insurer defends, we will undertake to do so; but we will be entitled to the insured's rights against all those other insurers.

I. Premiums

1. The first Named Insured shown in the Declarations:

a. Is responsible for the payment of all premiums; and

b. Will be the payee for any return premiums we pay.

2. The premium shown in the Declarations was computed based on rates in effect at the time the policy was issued. On each renewal, continuation or anniversary of the effective date of this policy, we will compute the premium in accordance with our rates and rules then in effect.

3. With our consent, you may continue this policy in force by paying a continuation premium for each successive one-year period. The premium must be:

a. Paid to us prior to the anniversary date; and

b. Determined in accordance with paragraph **2.** above.

Our forms then in effect will apply. If you do not pay the continuation premium, this policy will expire on the first anniversary date that we have not received the premium.

4. Undeclared exposures or change in your business operation, acquisition or use of locations may occur during the policy period that is not shown in the Declarations. If so, we may require an additional premium. That premium will be determined in accordance with our rates and rules then in effect.

J. Premium Audit

1. This policy is subject to audit if a premium designated as an advance premium is shown in the Declarations. We will compute the final premium due when we determine your actual exposures.

2. Premium shown in this policy as advance premium is a deposit premium only. At the close of each audit period, we will compute the earned premium for that period and send notice to the first Named Insured. The due date for audit premiums is the date shown as the due date on the bill. If the sum of the advance and audit premiums paid for the policy period is greater than the earned premium, we will return the excess to the first Named Insured.

3. The first Named Insured must keep records of the information we need for premium computation and send us copies at such times as we may request.

K. Transfer of Rights of Recovery Against Others to Us

1. Applicable to **SECTION I - PROPERTY** Coverage:

If any person or organization to or for whom we make payment under this policy has rights to recover damages from another, those rights are transferred to us to the extent of our payment. That person or organization must do everything necessary to secure our rights and must do nothing after loss to impair them. But you may waive your rights against another party in writing:

a. Prior to a loss to your Covered Property.

b. After a loss to your Covered Property only if, at time of loss, that party is one of the following:

(1) Someone insured by this insurance;

(2) A business firm:

(a) Owned or controlled by you; or

(b) That owns or controls you; or

(3) Your tenant.

You may also accept the usual bills of lading or shipping receipts limiting the liability of carriers.

This will not restrict your insurance.

2. Applicable to **SECTION II - LIABILITY** Coverage:

If the insured has rights to recover all or part of any payment we have made under this Coverage Part, those rights are transferred to us. The insured must do nothing after loss to impair such rights. At our request, the insured will bring "suit" or transfer those rights to us and help us enforce them.

We waive any right of recovery we may have against any person or organization with whom you have a written contract, permit or agreement to waive any rights of recovery against such person or organization because of payments we make for injury or damage arising out of your ongoing operations or "your work" done under a contract with that person or organization and included in the "products-completed operations hazard".

This condition does not apply to Medical Expenses Coverage.

L. Transfer of Your Rights and Duties Under This Policy

Your rights and duties under this policy may not be transferred without our written consent except in the case of death of an individual Named Insured. If you die, your rights and duties will be transferred to your legal representative but only while that legal representative is acting within the scope of their duties as your legal representative. Until your legal representative is appointed, anyone with proper temporary custody of your property will have your rights and duties but only with respect to that property.

THIS ENDORSEMENT CHANGES THE POLICY. PLEASE READ IT CAREFULLY.

WAIVER OF OUR RIGHT TO RECOVER FROM OTHERS ENDORSEMENT - CALIFORNIA

Policy Number: 72 WEC AX6R2J **Endorsement Number:**
Effective Date: 07/19/23 Effective hour is the same as stated on the Information Page of the policy.
Named Insured and Address: LeSar Development Consultants
404 EUCLID AVE STE 212
SAN DIEGO CA 92114

We have the right to recover our payments from anyone liable for an injury covered by this policy. We will not enforce our right against the person or organization named in the Schedule. (This agreement applies only to the extent that you perform work under a written contract that requires you to obtain this agreement from us.)

You must maintain payroll records accurately segregating the remuneration of your employees while engaged in the work described in the Schedule.

The additional premium for this endorsement shall be 2 % of the California workers' compensation premium otherwise due on such remuneration.

SCHEDULE

Person or Organization	Job Description
Any person or organization for whom you are required by written contract or agreement to obtain this waiver of rights from us	

Countersigned by _____
Authorized Representative

Form WC 04 03 06 (1) Printed in U.S.A.
Process Date: 06/08/23 **Policy Expiration Date:** 07/19/24

Policy Number:AW3H00328405

THIS ENDORSEMENT CHANGES THE POLICY. PLEASE READ IT CAREFULLY.

BLANKET ADDITIONAL INSURED - PRIMARY AND NON-CONTRIBUTORY

This endorsement modifies insurance provided under the following:

BUSINESS AUTO COVERAGE PART

A. The following is added to **SECTION II - LIABILITY COVERAGE,** Paragraph **A.1. Who Is An Insured:**

Additional Insured if Required by Contract

If you agree in a written contract, written agreement or written permit that a person or organization be added as an additional "insured" under this Coverage Part, such person or organization is an "insured"; but only to the extent that such person or organization qualifies as an "insured" under paragraph **A.1.c.** of this Section.

If you agree in a written contract, written agreement or written permit that a person or organization be added as an additional "insured" under this Coverage Part, the most we will pay on behalf of such additional "insured" is the lesser of:

(1) The Limits of Insurance for liability coverage specified in the written contract, written agreement or written permit; or

(2) The Limits of Insurance for Liability Coverage shown in the Declarations applicable to this Coverage Part.

Such amount shall be part of and not in addition to the Limits of Insurance shown in the Declarations applicable to this Coverage Part. Regardless of the number of covered "autos", "insureds", premiums paid, claims made or vehicles involved in the "accident", the most we will pay for the total of all damages and "covered pollution cost or expense" combined resulting from any one "accident" is the Limit of Insurance for Liability Coverage shown in the Declarations.

B. The following is added to **SECTION IV - BUSINESS AUTO CONDITIONS,** Paragraph **B. General Conditions,** subparagraph **5. Other Insurance:**

Primary and Non-Contributory

If you agree in a written contract, written agreement or written permit that the insurance provided to a person or organization who qualifies as an additional "insured" under **SECTION II - LIABILITY COVERAGE,** Paragraph **A.1. Who Is An Insured,** subparagraph **Additional Insured if Required by Contract** is primary and non-contributory, the following applies:

The liability coverage provided by this Coverage Part is primary to any other insurance available to the additional "insured" as a Named Insured. We will not seek contribution from any other insurance available to the additional "insured" except:

(1) For the sole negligence of the additional "insured"; or

(2) For negligence arising out of the ownership, maintenance or use of any "auto" not owned by the additional "insured" or by you, unless that "auto" is a "trailer" connected to an "auto" owned by the additional "insured" or by you; or

(3) When the additional "insured" is also an additional "insured" under another liability policy.

C. This endorsement will apply only if the "accident" occurs:

1. During the policy period;

2. Subsequent to the execution of the written contract or written agreement or the issuance of the written permit; and

3. Prior to the expiration of the period of time that the written contract, written agreement or written permit requires such insurance to be provided to the additional "insured".

D. Coverage provided to an additional "insured" will not be broader than coverage provided to any other "insured" under this Coverage Part.

ALL OTHER TERMS, CONDITIONS, AND EXCLUSIONS REMAIN UNCHANGED.

 Includes copyrighted material of ISO Insurance Services Office, Inc., with its permission

Policy Number:AW3H00328405

14. **AUTO LOAN PHYSICAL DAMAGE EXTENSION**

The following is added to **SECTION III - PHYSICAL DAMAGE COVERAGE, C. Limit Of Insurance** provision:

When a "loss" results in a total loss to a covered auto you own for which a Loss Payee is designated in this policy, the most we will pay for "loss" in any one "accident" is the greater of:

1. The actual cash value of the damaged or stolen property as of the time of the "loss"; or

2. The outstanding balance of the initial loan, less any amounts for taxes, overdue payments, overdue payment charges, penalties, interest , any charges for early termination of the loan, costs for Credit Life Insurance, Health, Accident or Disability Insurance purchased with the loan, and carry-over balances from previous loans.

15. **AUTO LEASE PHYSICAL DAMAGE EXTENSION**

The following is added to **SECTION III - PHYSICAL DAMAGE COVERAGE, C. Limit Of Insurance** provision:

If, because of damage, destruction or theft of a covered "auto", which is a long-term leased "auto", the lease agreement between you and the lessor is terminated, "we" will pay the difference between the amount paid under paragraph **C. LIMIT OF INSURANCE 1**. or **2**. and the amount due at the time of "loss" under the terms of the lease agreement applicable to the leased "auto" which you are required to pay: less any fees to dispose of the auto; any overdue payments; financial penalties imposed under a lease for excessive use, abnormal wear and tear or high mileage; security deposits not refunded by the lessor; cost for extended warranties, Credit Life Insurance, Health, Accident or Disability Insurance purchased with the loan; and carry over balances from previous leases.

This coverage applies only to the initial lease for the covered "auto" which has not previously been leased. This coverage is excess over all other collectible insurance.

SECTION IV - CONDITIONS

16. **DUTIES IN THE EVENT OF ACCIDENT, CLAIM, SUIT OR LOSS**

The following is added to **SECTION IV - BUSINESS AUTO CONDITIONS, A. Loss Conditions, 2. Duties In The Event Of Accident, Claim, Suit Or Loss**:

d. Knowledge of any "accident", claim, "suit" or "loss" will be deemed knowledge by you when notice of such "accident", claim, "suit" or "loss" has been received by:

(1) You, if you are an individual;
(2) Any partner or insurance manager if you are a partnership; or
(3) An executive officer or insurance manager if you are a corporation.

17. **BLANKET WAIVER OF SUBROGATION**

Paragraph **5. Transfer Of Rights Of Recovery Against Others To Us, SECTION IV - BUSINESS AUTO CONDITIONS, A. Loss Conditions** is replaced by the following:

Includes copyrighted material of Insurance Services Office, Inc. with its permission.
Copyright, Insurance Services Office, Inc., 1996

5. **Transfer Of Rights Of Recovery Against Others To Us**

   If any person or organization to or for whom we make payment under this Coverage Form has rights to recover damages from another, which have not been waived through the execution of an "insured contract", written agreement, or permit, prior to the "accident" or "loss" giving rise to the payment, those rights to recover damages from another are transferred to us. That person or organization must do everything necessary to secure our rights and must do nothing after the "accident" or "loss" to impair them.

18. **UNINTENTIONAL FAILURE TO DISCLOSE INFORMATION**

The following is added to **SECTION IV BUSINESS AUTO CONDITIONS. B. General Conditions**, paragraph **2. Concealment, Misrepresentation Or Fraud**:

Your unintentional error in disclosing, or failure to disclose, any material fact existing after the effective date of this Coverage Form shall not prejudice your rights under this Coverage Form. However, this provision does not affect our right to collect additional premium or exercise our right of cancellation or nonrenewal.

19. **HIRED AUTO - WORLDWIDE COVERAGE**

The following is added to **SECTION IV - Business Auto Conditions, B. General Conditions**, paragraph **7. Policy Period, Coverage Territory** provision:

e. Outside the coverage territory described in a., b., c., and d. above for an "accident" or "loss" resulting from the use of a covered "auto" you hire, without a driver, or your employee hires without a driver, at your direction, for the purpose of conducting your business, for a period of 30 days or less, provided the suit is brought within The United States of America or its territories or possessions.

SECTION V - DEFINITIONS

20. **MENTAL ANGUISH**

Paragraph **C. "Bodily injury", SECTION V - DEFINITIONS** is replaced by the following:

C. "Bodily injury" means bodily injury, sickness or disease sustained by a person including death or mental anguish resulting from any of these.

Includes copyrighted material of Insurance Services Office, Inc. with its permission.
Copyright, Insurance Services Office, Inc., 1996

EXHIBIT D

CONSULTANT PROFESSIONAL SERVICES AGREEMENT

(CITY of Oxnard and LeSar Support Services)

LIVING WAGE POLICY

Pursuant to the Living Wage Policy adopted July 9, 2002 by the City Council and effective October 1, 2002, the City Manager and City Attorney are directed to include the following language in all standard Consultant Professional services contracts that may be governed by the Living Wage Policy.

CITY OF OXNARD LIVING WAGE REQUIREMENTS

EFFECTIVE JULY 1, 2023

CONSULTANT shall compensate any employee of CONSULTANT who provides services under this Agreement in accordance with the Living Wage Policy, attached hereto and incorporated herein by reference as Exhibit D. While this Agreement is in effect, CONSULTANT shall pay such employee no less than $18.89 per hour for each hour that such employee provides services under this Agreement. This hourly rate shall be adjusted on July 1, 2024, and each July 1 thereafter, according to the percentage change in the Consumer Price Index, all items, prepared by the Bureau of Labor Statistics for the Los Angeles area relating to all urban consumers (CPI-U), index base 1982-84=100, comparing May of the previous year to May of the current year. In addition, while this Agreement is in effect, CONSULTANT shall provide to such employee no less than 96 hours of paid leave per calendar year.

a. CONSULTANT agrees to post, at a location readily accessible to those employees providing services to the CITY, a copy of the Living Wage Policy adopted by the Oxnard City Council on July 9, 2002 and effective October 1, 2002.

b. If CONSULTANT fails to compensate such employee pursuant to the Living Wage Policy, the City Manager or designee shall terminate this Agreement on written notice to CONSULTANT, effective immediately.

c. In addition, if CONSULTANT fails to comply with the Living Wage Policy in any manner, CONSULTANT shall pay to CITY a fine of $500 and shall pay to any employee providing services under this Agreement a penalty of three times the amount or value of the compensation owed to such employee under the Living Wage Policy. CONSULTANT shall pay such fine and penalty within fifteen (15) calendar days after the City Manager or designee provides written notice to CONSULTANT of the amount owed.

CITY COUNCIL AGENDA REPORT

REPORTS
AGENDA ITEM NO. N.1

DATE: September 19, 2023

TO: City Council

FROM: Michael Wolfe, Public Works Director, (805) 385-8055, michael.wolfe@oxnard.org

SUBJECT: County of Ventura Funding Agreement A-8534 for Channel Islands Harbor Water Quality Remediation. (10 minutes)

RECOMMENDATION

That the City Council:

1. Approve and authorize the Mayor to execute a funding Agreement with the County of Ventura, wherein the County shall pay an amount not to exceed $1,300,000 to the City for portions of water quality expenses in Channel Islands Harbor; and
2. Recognize the $1,300,000 funding as a contribution from the County to the General Fund (101), and therefrom appropriate $300,000 to ARPA Harbor Quality Feasibility Project (G2232) and $1,000,000 to the ARPA Harbor Water Quality Mitigation Project (M2211).

This item did not originate in Committee as it is a project previously approved by the City Council through the ARPA project selection process.

Please click the following link to view the required Measure M pre-recorded presentation video:
https://youtu.be/9tjkr7I8aU8

BACKGROUND

Special Districts is a Division of the Public Works Department and manages special districts throughout the City of Oxnard ("City") including the Seabridge Community Facilities District ("CFD"), Westport CFD, Mandalay Bay Waterways Maintenance Assessment District ("WAD" - Zone 1"), and Harbour Island (WAD - Zone 2). These special districts are located within the Channel Islands Harbor ("Harbor").

The Harbor is attached to a canal (the "Edison Canal") leading to the former Mandalay Power Generating Station ("Power Plant"). Large pumps associated with the Power Plant previously pulled water from the Harbor through the Edison Canal to cool the Power Plant. Once the Power Plant was closed in 2018, water was no longer pulled from the Harbor to cool the Power Plant – thus reducing water circulation in the Harbor.

Shortly after the Power Plant was decommissioned, an algal bloom occurred and was followed by widespread low dissolved oxygen in certain areas of the Harbor. Although an algal bloom has not occurred recently in the Harbor, the issue of water quality in the Harbor remains an ongoing concern.

DISCUSSION

The City of Oxnard ("City"), the County of Ventura ("County"), and residents of the Channel Islands Neighborhood Council ("CINC") have organized efforts to address water quality issues in the Harbor. On September 24, 2021, December 7, 2021, and March 29, 2022, the City Council approved funding totaling $1,300,000 from the American

Rescue Plan Act ("ARPA") funding to help address harbor water quality issues in the Harbor. The County had proposed to match the City's funding with their ARPA funds, but now intend to match from the County's General Fund. This funding agreement will help fund ongoing efforts, personnel costs, procuring of services and materials, conducting environmental review, obtaining permits or approvals, and conducting project management and costs tracking.

The Board of Supervisors is scheduled to review and take action on this funding agreement on September 12, 2023. If the agreement is changed by the Board of Supervisors at their September 12th meeting, Public Works staff will update the City Council during the City Council meeting on September 19, 2023.

STRATEGIC PRIORITIES

This agenda item supports the Infrastructure and Natural Resources strategy. The purpose of the Infrastructure and Natural Resources strategy is to preserve and improve our roads, utilities, parks, trees, water supply and natural resources through effective planning, prioritization, and an equitable and efficient use of available funding.

FINANCIAL IMPACT

This funding Agreement A-8534 with the County of Ventura in the amount not to exceed $1,300,000 will supplement the ARPA Harbor Quality Feasibility Project (G2232) for $300,000 and the ARPA Harbor Water Quality Mitigation Project (M2211) for $1,000,000 (legacy projects 22AR77 and 22AR78). Revenue of $1,300,000 will be recognized and funding appropriated to the General Fund (101).

Any portion of the funds not expended by December 31, 2030 must be returned to the County after that date.

Project	**ARPA Funding**	**County Funding**	**Total**
Harbor Quality Feasibility Project (G2232)	$300,000	$300,000	$600,000
Harbor Water Quality Mitigation Project (M2211)	$1,000,000	$1,000,000	$2,000,000
TOTAL	**$1,300,000**	**$1,300,000**	**$2,600,000**

For Finance Use Only: General Fund (Org. 1013801 Obj. 47250); Projects G2232 and M2211 (Org 1013801 Obj. 53200)

COMMITTEE OUTCOME

This item did not originate in Committee as it is a project previously approved by the City Council through the ARPA project selection process.

Prepared by: Steve Howlett, Assistant Public Works Director

ATTACHMENTS

1. County Funding Agreement A-8534
2. Presentation

FUNDING AGREEMENT REGARDING WATER QUALITY STUDIES AND MITIGATION ACTIVITIES AT CHANNEL ISLANDS HARBOR

This Funding Agreement Regarding Water Quality Studies and Mitigation at Channel Islands Harbor ("Agreement") is entered into as of September 12, 2023 (the "Effective Date"), by and between the COUNTY OF VENTURA, a political subdivision of the State of California ("County") and the City of Oxnard ("City"), a California municipal corporation, with reference to the following facts.

RECITALS

A. As of the Effective Date, the City has allocated $1,300,000 in American Rescue Plan Act of 2021 funds to conduct water quality feasibility studies and other water quality mitigation activities at the Channel Islands Harbor ("Water Quality Work").

B. The City desires the County to match these funds with an additional $1,300,000 for the Water Quality Work.

C. The County desires to provide the requested $1,300,000 funding for the Water Quality Work provided that the City manages this Water Quality Work.

D. The use of County General Funds for the Water Quality Work is in accordance with the County Board of Supervisors' action on December 13, 2022, when the Board approved the use of County General Funds to replace the use of American Rescue Plan Act of 2021 funds for previously approved projects, which included the $1,300,000 contribution to the City for the Water Quality Work that was previously approved by the County Board in October 2022.

NOW, THEREFORE, in consideration of the Recitals hereof and the mutual promises and covenants set forth in this Agreement, the Parties agree as follows:

AGREEMENT

Section 1. Payment. The County shall provide the City with a one-time payment in the amount of one million three hundred thousand dollars ($1,300,000.00) within 30 days after the Effective Date. The City shall solely use the funds for the Water Quality Work. Any portion of the funds not expended by December 31, 2030 must be promptly returned to the County after that date.

Section 2. City Responsibility for Water Quality Work. The City shall be solely responsible for managing and implementing the Water Quality Work valued at $2.6 million that will be funded pursuant to this Agreement, including by procuring services and materials, conducting any required environmental review, obtaining any required permits or approvals, and conducting project management and costs tracking.

Section 3. Relationship of Parties. Nothing in this Agreement shall be interpreted or understood by either of the parties, or by any third persons, as creating the relationship of employer and employee, principal and agent, limited or general partnership, or joint venture between the County and City or the City's agents, employees or contractors regarding the subject matter hereof. The City shall be solely responsible for its own acts and those of its agents and employees regarding the management and implementation of the Water Quality Work.

Section 4. Defense and Indemnification. The City agrees to indemnify, protect, hold harmless and defend (by counsel satisfactory to the County) the County, County Board members, and its other officials, employees and agents, from and against any and all third-party suits, actions, claims, causes of action, costs, demands, judgments and liens arising out of or related to this Agreement including but not limited to regarding procurement, environmental review, permitting and project management for the Water Quality Work, except to the extent caused by the County's sole active negligence or willful misconduct.

Section 5. Notices. Formal notices between the County and City shall be sufficiently given if and shall not be deemed given unless dispatched by registered or certified mail, postage prepaid, return receipt requested, or delivered by express delivery service, return receipt requested, or delivered personally, to the principal office of the County and City as follows:

County:	City:
County of Ventura	City of Oxnard
County Executive Office	City Manager's Office
Attn: Dr. Sevet Johnson	Attn: Alexander Nguyen, City Manager
800 S. Victoria Ave., L1940	300 West Third Street, 4th Floor
Ventura, CA 93009	Oxnard, CA 93030
(805) 654-3656 (TEL)	(805) 385-7430 (TEL)

Such written notices, demands and communications may be sent in the same manner to such other addresses as the affected party may from time to time designate by mail as provided in this Section. Receipt shall be deemed to have occurred on the date shown on a written receipt for delivery or refusal of delivery.

Section 6. Amendments. No amendment, alteration or variation of the terms or conditions of this Agreement shall be valid unless agreed to in writing by the parties.

Section 7. Entire Understanding of the Parties. This Agreement constitutes the entire understanding and agreement of the Parties with respect to the Water Quality Work that will be funded pursuant to this Agreement.

Section 8. Multiple Originals; Counterpart. This Agreement may be executed in multiple originals, each of which is deemed to be an original, and may be signed in counterparts.

WHEREFORE, this Agreement has been entered into by the undersigned as of the Effective Date.

County of Ventura	City of Oxnard
_____	_____
Authorized Signature	Authorized Signature
_____	_____
Printed Name	Printed Name
_____	_____
Title	Title
_____	_____
Date	Date

Attest:

_____
Rose Chaparro, City Clerk

Approved as to form:

_____
Stephen M. Fischer, City Attorney

County of Ventura Funding Agreement A-8534 for Channel Islands Harbor Water Quality Remediation

City Council
September 19, 2023

Eric L. Storrie
Special Districts Manager

CITY OF OXNARD CALIFORNIA

RECOMMENDATION

That the City Council:

1. Approve and authorize the Mayor to execute a funding Agreement with the County of Ventura, wherein the County shall pay an amount not to exceed $1,300,000 to the City for portions of water quality expenses in Channel Islands Harbor; and

2. Recognize the $1,300,000 funding as a contribution from the County, and therefrom appropriate $300,000 to ARPA Harbor Quality Feasibility Project (G2232) and $1,000,000 to the ARPA Harbor Water Quality Mitigation Project (M2211).

BACKGROUND

- Special Districts is a Division of the Public Works Department and manages special districts throughout the City, including
  - Seabridge Community Facilities District (“CFD”)
  - Westport CFD
  - Mandalay Bay Waterways Maintenance Assessment District (“WAD - Zone 1”)
  - Harbour Island Waterways Maintenance Assessment District (“WAD - Zone 2”)

- These special districts are located within the Channel Islands Harbor (“Harbor”)

MAP OF SPECIAL DISTRICTS IN CHANNEL ISLANDS HARBOR

BACKGROUND

- The Harbor is attached to a canal (the “Edison Canal”) leading to the former Mandalay Power Generating Station (“Power Plant”).

- Large pumps associated with the Power Plant previously pulled water from the Harbor through the Edison Canal to cool the Power Plant

- Once the Power Plant was closed in 2018, water was no longer pulled from the Harbor to cool the Power Plant - thus reducing water circulation in the Harbor.

BACKGROUND

- Shortly after the Power Plant was decommissioned, an algal bloom occurred and was followed by widespread low dissolved oxygen in certain areas of the Harbor.

- Although an algal bloom has not occurred recently in the Harbor, the issue of water quality in Harbor remains an ongoing concern.

DISCUSSION

- The City of Oxnard, the County of Ventura, and residents of the Channel Islands Neighborhood Council have organized efforts to address water quality issues in the Harbor.

- On September 24, 2021, December 7, 2021, and March 29, 2022, the City Council approved funding totaling $1,300,000 from the American Rescue Plan Act funding to help address harbor water quality issues in the Harbor.

- The County had proposed to match the City's funding with their ARPA funds, but now intend to match from the County's General Fund.

DISCUSSION

- This funding agreement will help fund ongoing efforts, personnel costs, procuring of services and materials, conducting environmental review, obtaining permits or approvals, and conducting project management and costs tracking.

- The Board of Supervisors is scheduled to review and take action on this funding agreement on September 12, 2023.

- If the agreement is changed by the Board of Supervisors at their September 12, 2023 meeting, Public Works staff will update the City Council during the City Council meeting on September 19, 2023.

FINANCIAL IMPACT

- This funding Agreement A-8534 with the County of Ventura in the amount not to exceed $1,300,000 will supplement the ARPA Harbor Quality Feasibility Project (G2232) for $300,000 and the ARPA Harbor Water Quality Mitigation Project (M2211) for $1,000,000 (legacy projects 22AR77 and 22AR78). Revenue of $1,300,000 will be recognized and funding appropriated to the General Fund (101).

- Any portion of the funds not expended by December 31, 2030 must be returned to the County after that date.

QUESTIONS?

CITY OF OXNARD CALIFORNIA

CITY COUNCIL AGENDA REPORT

REPORTS
AGENDA ITEM NO. N.2

DATE: September 19, 2023

TO: City Council

FROM: Michael Wolfe, Public Works Director, (805) 385-8055, michael.wolfe@oxnard.org

SUBJECT: Second Amendment to Trade Services Agreement A-8230 with Sweeping Corporation of America of California for Citywide Street Sweeping Services. (10 minutes)

RECOMMENDATION

That the City Council approve and authorize:

1. The Mayor to execute a Second Amendment to an Agreement with Sweeping Corporation of America of California (SCA) for citywide street sweeping services, alleyways, parking lots, parking structures and city facilities; extending the term for nine (9) months from October 1, 2023 to June 30, 2024 and increasing the contract total by $2,050,000 for a new contract total not to exceed: $3,850,000 to comply with new State of California mandate for prevailing wage; and
2. A budget appropriation request in the amount of $1,292,312 from the General Fund (101) available fund balance for the Public Works Department for this Amendment in FY 2023-24.

(This is a continuation of an agreement that originated in Committee on September 8, 2020, and was approved by Council on October 6, 2020)

Please click the following link to view the required Measure M pre-recorded presentation video:
https://youtu.be/hV5bfQMQj4o

BACKGROUND

The City contracts sweeping services for residential streets, alleyways, arterial streets, public parking lots and various City facilities. The City is responsible for the sweeping maintenance of approximately 21,126 curb miles annually within the community. Adequate sweeping occurs at various intervals to clean up the streets following refuse collection and to maintain compliance with permit requirements for stormwater discharge from the National Pollutant Discharge Elimination System (NPDES) issued by the State Water Resources Control Board. Street sweeping is also done to maintain and enhance the City's appearance. Currently, sweeping services are fulfilled by a third-party vendor.

On October 6, 2020, the City Council approved Agreement Number A-8230 for $1,800,000 with Venco for citywide street sweeping service from October 6, 2020 to September 30, 2023. Sweeping Corporation of America of California (SCA) acquired ownership of Venco on June 21, 2022. The City entered into a First Amendment to Agreement A-8230, approved by the City's Purchasing Agent, to amend the vendor's name from Venco to SCA.

In anticipation of the expiration of Agreement A-8230 in September 2023, on June 27, 2023, the City's Purchasing Division conducted a formal solicitation for sweeping services citywide for streets, alleyways, parking lots, and City facilities (Bid Number PW23-121). Information regarding the solicitation was posted on the City's website, in addition to www.publicpurchase.com, a website where solicitations are publicly posted. The City received two bid responses prior to the deadline of July 25, 2023. The bids were non-responsive as they failed to conform to the essential requirements of the

invitation for bids and therefore all bids were rejected. The approval of a Second Amendment will comply with prevailing wage requirements and allow time for staff to resolicitate a request for bids or request for proposals.

Prior legislation required that, except as specified, not less than the general prevailing rate of per diem wages, determined by the Director of Industrial Relations, be paid to workers employed on public works projects. Prior law defined the term "public works" for purposes of requirements regarding the payment of prevailing wages to include construction, alteration, demolition, installation, or repair work done under contract and paid for using public funds, except as specified. Passed by the State legislation in August 2022, Assembly Bill 1886 (AB 1886) expanded the definition of "public works" to include street sweeping, as defined, maintenance performed for the routine cleaning of any publicly owned or publicly operated street, road, or highway done under contract and paid for in whole or in part out of public funds. AB 1886 imposed a state-mandated local program, which now requires the payment of prevailing wage for street sweeping. The State's Department of Industrial Relations (DIR) published the current rate of $91.25 per hour on July 1, 2023, set to increase by $4.00 per hour to $95.25 on July 1, 2024 (Attachment 3). Prior to AB 1886, the average wage for a street sweeper driver ranged between $25.00-$35.00.

DISCUSSION

Due to the rejections of all bids from the solicitation on June 27, 2023, this Second Amendment to Agreement A-8230 is recommended. The Second Amendment will bring the agreement into compliance with the State of California's Department of Industrial Relations prevailing wage requirements.

The previous agreement was not required to pay prevailing wages for street sweeping services since it was awarded in April 2020 prior to AB 1886 being approved on August 24, 2022. Complying with prevailing wage requirements, the costs for street sweeping for the Second Amendment has increased by approximately $1,134,000 for the 9-month extension, not accounting for any inflation increases, for a total contract increase of $2,050,000.

Monthly Prevailing Wage Impact		
Previous Cost Without Prevailing Wage	New Cost with Prevailing Wage	Increase
$64,000	$190,000	$126,000

The Second Amendment provides the same services as the original scope of work with some minor clarifications. Under the Second Amendment of Agreement A-8230, SCA will provide citywide sweeping services which includes bi-weekly sweeping of residential streets, weekly sweeping of downtown streets, bi-weekly sweeping of arterial streets, sweeping of alleyways and sweeping of public parking areas and City facilities. Sweeping is an effective method of preventing trash, plant debris and sediment from entering the City's storm drain system. Residential sweeping days are generally the next business day after the refuse collection schedule. SCA will also be responsible for on-call emergency sweeping needs, such as spills in the roadway and traffic collisions.

REDUCED SCOPE OPTIONS:
As an alternative, the scope of work for the citywide sweeping services can be considered for reduction, although not recommended, in the following areas:

Scope of Services*	**Option 1 No Reduction (Recommended)**	**Option 2 (50% Service Reduction)**	**Option 3 (100% Service Reduction)**
Alleyway - 5th week of every Month	Approx. 140 monthly miles	Approx. 70 monthly miles	0 monthly miles

Downtown - Weekly	Approx. 31 monthly miles	Approx. 15 monthly miles	0 monthly miles
Medians (included with Arterials & City Streets)	Approx. 100 monthly miles	Approx. 50 monthly miles	0 monthly miles
Parking Lots Weekly	Approx. 33 weekly	Approx. 16 weekly	0 weekly
Parking Lots Monthly	Approx. 30 monthly	Approx. 15 monthly	0 monthly

*(Excludes residential areas, downtown parking structure and Del Norte facility)

As alternatives to Option 1, which keeps the scope of service the same (recommended option), staff have identified reduced scope options for consideration noting that residential street sweeping services will remain without an option to reduce. To ensure compliance with the State's NPDES permit, residential streets (Priority A locations) shall be swept twice per month. The City's MS4 Permit requires residential streets (identified as Priority A) to be swept at least two times per month and therefore staff has not proposed an option to reduce residential street sweeping. Option 2 reduces the City's level of sweeping services to half of what is currently provided and will reduce anticipated costs by approximately $160,200 through June 30, 2024; while Option 3 eliminates select street sweeping services provided and would reduce anticipated costs by approximately $250,920 through June 30, 2024. A majority of these cost reduction options would impact the General Fund. Staff recommends Option 1 (no reduction in current service) to ensure strict compliance with the NPDES permit and keeping the current quality of life services related to debris pick-up in the City's rights-of-way.

Under the direction of the City's Project Manager, SCA is responsible for coordinating street sweeping and enforcement with the Police Department and Public Works Department for all posted street sweeping areas in the City. SCA is required to have adequate personnel and equipment available to meet the posted times in all restricted parking areas within the City.

Staff intends to re-bid for these services in January of 2024 to allow for all bidders to conform to the essential requirements of the invitation for bids. Staff intends to bring forth a new agreement to Council in May for approval and start the new contract July 1, 2024. This re-bid timeline will also allow for the FY 2024-25 budget to include the required amounts to cover this unfunded State change to prevailing wage requirements.

STRATEGIC PRIORITIES

This agenda item supports the Infrastructure and Natural Resources strategy. The purpose of the Infrastructure and Natural Resources strategy is to preserve and improve our roads, utilities, parks, trees, water supply and natural resources through effective planning, prioritization, and an equitable and efficient use of available funding.

FINANCIAL IMPACT

The Second Amendment extends the current contract term from September 30, 2023 to June 30, 2024 and an increase of $2,050,000 to a new not to exceed amount of $3,850,000 to provide services through June 30, 2024. The significant increase in cost to this contract is due in large part from prevailing wage requirements as approved through AB1886. Increased fuel costs and minor edits in the scope of work have also increased operational costs.

The FY 2023-24 Adopted Budget allocated approximately $700,000 for these annual services from various funds. Due to the prevailing wage requirements of this contract, the cost has significantly increased and therefore requires a budget appropriation from the General Fund in the amount of $1,292,312 for FY 2023-24. Other funds, that pay for portions of street sweeping, will either absorb the increases to their respective areas or reassess actual spending at midyear as noted in the table below. Staff may request additional funds through a future Council agenda item if needed.

Program – Fund	Account Number	FY 2023-24 New Estimated Spending Plan	FY 2023-24 Adopted Allocated Budget	Proposed Budget Appropriation	New FY 2023-24 Allocated Budget
Maintenance - General Fund	1013451-53200	$1,615,000	$322,688	$1,292,312	$1,615,000
Street Maintenance – State Gas Tax Fund	1813401-53200	$300,000	$300,000	$0	$300,000
Oxnard Transportation Center – Transportation Development Act Fund (parking lot)	90403201-53200	$2,500	$2,500	$0	$2,500
Environmental Resources Fund (parking lot and facility)	6313630-53200	$60,000	$38,700	$0	$60,000*
Water Operating Fund (parking lot)	6013600-53200	$2,500	$2,500	$0	$2,500
Wastewater Treatment Operating Fund (parking lot)	6113614-53200	$2,000	$2,000	$0	$2,000
Facilities Maintenance Fund (downtown parking structure)	7353740-53200	$60,000	$20,000	$0	$60,000*
Other Public Work Programs	Various operating budgets in Public Works	$8,000	$11,612	$0	$8,000
TOTAL		**$2,050,000**	**$700,000**	**$1,292,312**	**$2,050,000**

*Reassess at midyear

COMMITTEE OUTCOME

This is a continuation of an agreement that originated in Committee on September 8, 2020 and was approved by Council on October 6, 2020. Due to time constraints of a new solicitation, this Amendment will provide continued services with no interruptions.

Prepared by: Eric Zetz, Division Manager, Brian Yanez, Assistant Public Works Director

ATTACHMENTS

1. Second Amendment to A-8230
2. A-8230 and First Amendment
3. Presentation

SECOND AMENDMENT TO TRADE SERVICES AGREEMENT

This Second Amendment ("Second Amendment") to the Trade Services Agreement ("Agreement") is made and entered into in the County of Ventura, State of California, this _____ day of September, 2023, by and between the City of Oxnard, a municipal corporation ("City"), and SCA of CA, LLC. ("Vendor"). This Second Amendment amends the Agreement entered into on October 7, 2020, by City and SCA of CA, LLC. The Agreement previously has been amended on June 21, 2022, by a First Amendment.

City and Vendor agree as follows:

1. The date "September 30, 2023" in Section 5 of the Cover Page of the Agreement is hereby amended to "June 30, 2024".

2. The total agreement amount "$1,800,000" in Section 6 of the Cover Page of the Agreement is hereby amended to "3,850,000.00".

3. The City's Project Manager name "Todd Vasquez-Housley, Environmental Resources Division Manager" in section 7 of the Cover Page of the Agreement is hereby amended to "Eric Zetz, Environmental Resources Division Manager".

4. The contact email for City's Project Manager "toddvhousley@oxnard.org" is hereby amended to "eric.zetz@oxnard.org".

5. In Section 10 of the Cover Page of the Agreement, the selected answer is hereby amended to the second box titled: "Prevailing Wage but not Living Wage, in which case: Section 20(e) and the Prevailing Wages Exhibit are incorporated and are required; but Section 20(a) through (d) and the Living Wage Policy Exhibit are not incorporated and are not required."

6. The Living Wage Policy Exhibit is hereby disincorporated; instead, the Prevailing Wage Policy Exhibit is attached hereto and incorporated herein by this reference.

7. The following is attached hereto and incorporated herein by this reference into the Agreement: Iran Contracting Act Certification Exhibit.

8. A Section 42 is created and incorporated after Section 41 to state: "In accordance with Public Contract Code Section 2200 et seq., the City requires that any person that submits a bid or proposal or otherwise proposes to enter into or renew a contract with the City with respect to goods or services of one million dollars ($1,000,000) or more, must certify at the time an Agreement is signed or renewed, that the person is not identified on a list created pursuant to subdivision (b) of Public Contract Code Section 2203 as a person engaging in investment activities in Iran described in subdivision (a) of Public Contract Code Section 2202.5, or as a person described in subdivision (b) of Public Contract Code Section 2202.5, as applicable. The form of such Iran Contracting Certificate is included with this Agreement and must be signed and dated under penalty of perjury."

9. The reference to the Rates and Cost Exhibit everywhere it is listed in the Agreement is hereby amended to the Rates and Cost Exhibit-August 2023. The Rates and Cost Exhibit is hereby disincorporated; instead, the Rates and Cost Exhibit-August 2023 is attached hereto and incorporated herein by this reference.

10. As so amended, the Agreement remains in full force and effect.

[Signatures on next page]

IN WITNESS WHEREOF, the parties hereto have executed the Amendment on the date first written above.

CITY OF OXNARD

_____ _____
☐John C. Zaragoza, Mayor[1] Date
☐Jennifer Yates, Purchasing Agent [2]

SCA OF CA, LLC

_____ _____
Erin Quinn, Secretary Date

_____ _____
Brad Becker, District Manager[3] Date

ATTEST:

_____ _____
Rose Chaparro, City Clerk Date
(only if Mayor signs)

APPROVED AS TO FORM:

_____ _____
Stephen M. Fischer, City Date
Attorney (always required

[1] The City Council must authorize and the Mayor must execute any agreement over $200,000.

[2] The Purchasing Agent may execute any authorized agreement up to $200,000.

[3] The City requires the following for any contract:

- For a corporation, the signatures of the Board President, CEO or Vice President and of the Board Secretary, Assistant Secretary, CFO or Assistant Treasurer;
- For an LLC, the signatures of at least two managers of the LLC (company directors, not lower-level managers); or
- For a partnership, the signature of a partner. If the partnership is a limited partnership, the signer must be a general partner.

If the company has a different structure, or if the above-listed persons are not the appropriate signers, please submit to the City Attorney legally-binding documentation stating who can sign and bind your company.

TRADE SERVICES AGREEMENT
(CITY of Oxnard and SCA OF CA, LLC.)

PREVAILING WAGE

1. SERVICE PROVIDER acknowledges that the Project defined in the Agreement between SERVICE PROVIDER and CITY is a "public work" as defined in Division 2, Part 7, Chapter 1 of the California Labor Code ("Chapter 1"), and that this Agreement is subject to Chapter 1 and the rules and regulations established by the Director of Industrial Relations ("DIR") implementing such statutes. SERVICE PROVIDER shall perform the Project as a public work. SERVICE PROVIDER shall comply with and be bound by all the terms, rules and regulations described in Chapter 1 and the DIR's rules and regulations as though set forth in full herein.

2. Pursuant to Labor Code Section 1773.2, copies of the prevailing rate of per diem wages for each craft, classification, or type of worker needed to perform the Agreement are on file at City Hall and will be made available to any interested party on request. SERVICE PROVIDER acknowledges receipt of a copy of the DIR determination of such prevailing rate of per diem wages, and SERVICE PROVIDER shall post such rates at each job site covered by this Agreement.

3. SERVICE PROVIDER is required to post job site notices, as prescribed by regulation. See Labor Code Section 1771.4(a)(2).

4. SERVICE PROVIDER shall comply with and be bound by the provisions of Labor Code Sections 1774 and 1775 concerning the payment of prevailing rates of wages to workers and the penalties for failure to pay prevailing wages. SERVICE PROVIDER shall, as a penalty to CITY, forfeit not more than $200 for each calendar day or portion thereof for each worker paid less than the DIR's determined prevailing rates for the work or craft in which the worker is employed pursuant to this Agreement by SERVICE PROVIDER or any subcontractor. The Labor Commissioner shall determine the amount of the penalty as described in Section 1775.

5. SERVICE PROVIDER shall comply with Labor Code Section 1776, which requires SERVICE PROVIDER and each subcontractor to (1) keep accurate payroll records and verify such records in writing under penalty of perjury, (2) certify and make such payroll records available for inspection, and (3) inform CITY of the location of the records.

6. SERVICE PROVIDER shall comply with Labor Code Sections 1777.5, 1777.6 and 1777.7 and California Administrative Code Title 8, Section 200 et seq. concerning the employment of apprentices on public works projects for all apprenticeable occupations. Before commencing work under this Agreement, SERVICE PROVIDER shall provide CITY with a copy of the information submitted to any applicable apprenticeship program. Within 60 days after concluding the Project, SERVICE PROVIDER and each of its subcontractors shall submit to CITY a verified statement of the journeyman and apprentice hours performed under this Agreement.

7. SERVICE PROVIDER may not be debarred or suspended throughout the Agreement Term pursuant to Labor Code Section 1777.1 or 1777.7. If he, she or it

becomes debarred or suspended in the Agreement Term, SERVICE PROVIDER must immediately notify CITY.

8. SERVICE PROVIDER is not qualified to bid on, be listed in a Bid proposal, or engage in the performance of any contract for public work, as defined in Labor Code Sections 1720 through 1861, unless currently registered and qualified to perform public work pursuant to Labor Code Section 1725.5. SERVICE PROVIDER shall continue without interruption to stay registered and qualified to perform public work pursuant to Section 1725.5 for the duration of the term of this Agreement. This provision does not apply to construction, alteration, demolition, installation or repair work of $25,000 or less or to maintenance work of $15,000 or less.

9. SERVICE PROVIDER acknowledges that 8 hours labor constitutes a legal day's work. SERVICE PROVIDER shall comply with and be bound by Labor Code Section 1810.

10. SERVICE PROVIDER shall comply with and be bound by Labor Code Section 1813 concerning penalties for workers who work excess hours. SERVICE PROVIDER shall, as a penalty to CITY, forfeit $25 for each worker employed in the performance of this Agreement by SERVICE PROVIDER or by any subcontractor for each calendar day during which such worker is required or permitted to work more than 8 hours in any calendar day and 40 hours in any one calendar week in violation of the provisions of Division 2, Part 7, Chapter 1, Article 3 of the Labor Code. Pursuant to Labor Code Section 1815, work performed by SERVICE PROVIDER's employees in excess of 8 hours per day and 40 hours per week shall be permitted upon public work upon compensation for all hours worked in excess of 8 hours per day at not less than 1 ½ times the basic rate of pay.

11. The Project listed in the Agreement is subject to compliance monitoring and enforcement by the DIR.

12. SERVICE PROVIDER shall be responsible for each and every one of its subcontractors' compliance with Chapter 1, the DIR's rules and regulations, and Labor Code Sections 1860 and 3700. SERVICE PROVIDER shall include in the written contract between it and each subcontractor a copy of, and a requirement that each subcontractor shall comply with, those statutory provisions. SERVICE PROVIDER shall be required to take all actions necessary to enforce such contractual provisions and ensure subcontractors' compliance, including without limitation, conducting a periodic review of the certified payroll records of each subcontractor, and upon becoming aware of the failure of the subcontractor to pay its workers the specified prevailing rate of wages, SERVICE PROVIDER shall diligently take corrective action to halt or rectify any failure.

13. To the maximum extent, SERVICE PROVIDER shall hold harmless, defend (with counsel approved by the City Attorney) and indemnify CITY, its legislative bodies, and its officials, officers, employees and agents from any demand or claim for damages, compensation, fines, penalties or other amounts arising out of or incidental to any acts or omissions listed above by any person or entity (including Service Provider, its subcontractors, and each of their officials, officers, employees and agents) in connection with any work undertaken or in connection with the Agreement, including

without limitation the payment of all attorneys' fees and other related costs. All duties of SERVICE PROVIDER under this Section shall survive Agreement termination.

IRAN CONTRACTING ACT CERTIFICATION
(TO BE EXECUTED AND SUBMITTED WITH THE AGREEMENT)
Public Contract Code Sections 2202-2208

Pursuant to Public Contract Code 2204.(a) A public entity shall require a person that is submits a bid or proposal to,or otherwise proposes to enter into or renew a contract with, a public entity with respect to a contract for goods or services of one million dollars ($1,000,000) or more to certify, at the time an Agreement is signed or renewed, that the person is not identified on a list created pursuant to subdivision (b) of Section 2203 as a person engaging in investment activities in Iran described in subdivision (a) of Section 2202.5 or as a person described in subdivision 9b) of Section 2202.5, as applicable.

To comply with this requirement, please insert your company/entity and Federal ID number (if available) and complete **one** of the options below. Please note, California law established penalties for providing false certifications, including civil penalties equal to the greater of $250,000 or twice the amount of the contract for which the false certification was made, contract termination and three-year ineligibility to bid on contract in accordance with Public Contract Code section 2205.

OPTION No.1 – CERTIFICATION
I, the official named below, certify I am duly authorized to execute this certification on behalf of the company/entity identified below, and the company/entity identified below is not on the current list of persons engaged in investment activities in Iran created by DGS and is not a financial institution extending twenty million dollars ($20,000,000) or more in credit to another person or entity, for 45 days or more, if that other person or company/entity will use the credit to provide goods or services in the energy sector in Iran and is identified on the current list of persons engaged in investment activities in Iran created by DGS in accordance with subdivision
(b) of Public Contract Code 2203.

Company Name/Financial Institution (printed): _____ Federal ID Number (or n/a): _____

By (Authorized Signature): _____

Printed Name & Title of Person Signing: _____ Date Executed _____

Executed in the County of_____ in the State of _____

OPTION No.2 – EXEMPTION
Pursuant to Public Contract Code sections 2203(c) and (d), a public entity may permit a vendor/financial institution engaged in investment activities in Iran, on a case-by-case basis, to be eligible for, or to bid on, submit a proposal for, or enters into or renews, a contract for goods and services. If you have obtained an exemption from the certification requirement under the Iran Contracting Act, please fill out the information below and attach documentation demonstrating the exemption approval.

Company Name/Financial Institution (printed): _____ Federal ID Number (or n/a): _____

By (Authorized Signature): _____

Printed Name & Title of Person Signing: Date Executed

Executed in the County of_____ in the State of _____

RATES AND COSTS EXHIBIT- AUGUST 2023

1.0

City of Oxnard Street Sweeping Service	Rate Per Curb Mile	Total Monthly Curb Miles	Estimated Monthly Cost
Residential/Restricted - Bi-Weekly Less Holiday Weeks-No Sweeping	$80.00 ($80.00)	1,112 curb miles (295) curb miles	$88,960.00
Riverpark – Bi-Weekly	$80.00	68 curb miles	$5,440.00
Alleyway- 5th Week of Every Month & Holiday Weeks When Residential/Restricted Sweeping is Suspended	$80.00	140 curb miles	$11,200.00
Arterial - Bi-Weekly	$80.00	618 curb miles	$49,440.00
Downtown - Weekly	$80.00	30.8 curb miles	$2,464.00
Parking Lot- (Weekly)	See Section 3.0	33 Parking Lots	$8,000.00
Parking Lot - Monthly	See Section 3.0	30 Parking Lots	$6,000.00
Monthly Standard Service Estimated Cost			$171,504.00

2.0 Parking Lot Sweeping Compensation Rates By Category:

Weekly Sweep Service - 33 parking lots on weekly sweeping schedule, unit prices per table in section 3.0. Aggregate total per month for weekly swept parking lots is: **$8,000.00**

Monthly Sweep Service - 30 parking lots on monthly sweeping schedule, unit prices per table section 3.0. Aggregate total per month for weekly swept parking lots is: **$6,000.00**

3.0 Unit Pricing- Parking Lots

WEEKLY FREQUENCY	
Lot No.	Price Per Month
4	$242.42
5	$242.42
19	$242.42
20	$242.42
21	$242.42
22	$242.42
23	$242.42
24	$242.42
25	$242.42
26	$242.42
27	$242.42
28	$242.42
29	$242.42
30	$242.42
31	$242.42
32	$242.42
33	$242.42
34	$242.42
35	$242.42
36	$242.42
37	$242.42
38	$242.42
39	$242.42

MONTHLY FREQUENCY	
Lot No.	Price Per Sweep/Month
1	$200.00
2	$200.00
6	$200.00
7	$200.00
8	$200.00
9	$200.00
10	$200.00
11	$200.00
12	$200.00
13	$200.00
14	$200.00
15	$200.00
16	$200.00
17	$200.00
18	$200.00
48	$200.00
49	$200.00
50	$200.00
51	$200.00
56	$200.00
58	$200.00
59	$200.00
60	$200.00

40	$242.42		61	$200.00
41	$242.42		62	$200.00
42	$242.42		63	$200.00
43	$242.42		64	See Section 4.0 Below
44	$242.42		65	$200.00
44A	$242.42		66	$200.00
45	$242.42		67	$200.00
46	$242.42		68	See Section 5.0 Below
46A	$242.42		69	$200.00
47	$242.56			

4.0 Parking Lot No. 64, Downtown Parking Structure, shall be swept for the amount **$440.00** per sweep. Vendor shall mail invoice for payment to: City Of Oxnard -Facilities Maintenance Division. Attention: Division Manager. 1060 Pacific Avenue, Oxnard, CA 93030

5.0 Sweeping at the Del Norte Facility (Parking Lot No.68) shall occur one-time daily Monday through Saturday during closing hours from 5:00 p.m. to 5:30 a.m. Areas to be swept include parking lots, loading docks, truck and trailer staging areas, scale areas, ingress areas, and all other vehicle traffic asphalt pavement surface areas at the facility site. Monthly price for sweeping: **$6,000.00.** Vendor shall line itemized this service cost on monthly invoice to the City.

Daily sweeping shall occur one-time daily Monday through Saturday on Del Norte Boulevard from Sturgis Road to Fifth Street and on Sturgis Road from Del Norte Boulevard to Elevar Street. Monthly price for sweeping: **$6,000.00.** Vendor shall line itemize this service cost on monthly invoice to the City.

6.0 Removal of 13.4 cubic yard roll-off container from arterials or other sites used exclusively by Vendor for containment of only street sweeping debris. Fee per pickup and removal of 13.4 cubic yard roll-off container shall be fee listed in effective City ordinance establishing solid waste system user fees and charges for pickup and removal of 13.4 cubic yard roll-off container.

7.0 Hourly rates for extra sweeps, on-call alleyway sweeping, special sweeps, and emergency sweeps

are as follows: Regular Hour Rate (7:00 a.m. to 5:00 p.m., Monday through Friday): **$220.00**

After Hour/Holiday/Weekend Rate: **$250.00**

FIRST AMENDMENT TO TRADE SERVICES AGREEMENT

This First Amendment ("First Amendment") to the Trade Services Agreement ("Agreement") is made and entered into in the County of Ventura, State of California, this 21 day of June, 2022, by and between the City of Oxnard, a municipal corporation ("City"), and SCA of CA, LLC. ("Vendor"). This First Amendment amends the Agreement entered into on October 7, 2020, by City and Venco Power Sweeping, Inc.

WHEREAS, on December 15, 2021 SCA of CA, LLC acquired all of the issued and outstanding common stock of Venco Power Sweeping, Inc.

NOW THEREFORE, City and SCA of CA, LLC agree as follows:

1. In Section 2 of the Cover Page of the Agreement, Vendor name "Venco Power Sweeping, Inc." is deleted and replaced with " SCA of CA, LLC".

2. In Section 8, of the Cover Page, Vendor's Project Manager "Todd Barrett, General Manager" is deleted and replaced with "Mike Justice, Site Manager"

3. In Section 11, of the Cover Page, Addresses for Vendor,

" 2400 Eastman Avenue"
Oxnard, CA 93030
Attn: Todd Barrett, General Manager

is deleted and replaced with

" 2400 Eastman Avenue"
Oxnard, CA 93030
Attn: Mike Justice, Site Manager

4. In Section 12, of the Cover Page, Vendor's Project Manager "tbarrett@vencosweep.com" is deleted and replaced with "mjustice@sweepingcorp.com"

5. Henceforth SCA of CA, LLC assumes all rights, duties, and obligations of Venco Power Sweeping, Inc. in the Agreement.

6. As so amended, the Agreement remains in full force and effect.

[Signatures on next page]

IN WITNESS WHEREOF, the parties hereto have executed the Amendment on the date first written above.

CITY OF OXNARD

Jennifer Yates (Jun 21, 2022 10:31 PDT) Jun 21, 2022

☐ John C. Zaragoza, Mayor[1] Date
☐ Alexander Nguyen, City Manager
☐ Jennifer Yates, Purchasing Manager
☑, Buyer

ATTEST:

N/A

Rose Chaparro, City Clerk Date
(only if Mayor signs)

APPROVED AS TO FORM:

6/9/2022

Stephen M. Fischer, City Attorney (always required) Date

SCA OF CA, LLC

Matthew Spencer
Chief Operating Officer
5/24/22
Date

Anthony Cincotta
Regional Vice President
5/24/22
Date

AGREEMENT FOR TRADE SERVICES
COVER PAGE

(1) Agreement Start Date: October 6, 2020

(2) Vendor: Venco Power Sweeping, Inc.

(3) Services: Citywide streets, alleyways, parking lots, and parking structure sweeping.

(4) Schedule of Services: See Schedule of Services Exhibit, which is attached hereto and incorporated herein.

(5) Agreement Ending Date: September 30, 2023

(6) Total Agreement Amount: $1,800,000

(7) City's Project Manager: Todd Vasquez-Housley, Environmental Resources Division Manager

(8) Vendor's Project Manager: Todd Barrett, General Manager

(9) Insurance Coverage: INS-D

(10) What wages are required for this Project?

- ☒ Living wage but not prevailing wages, in which case: Section 20(a) through (d) and the Living Wage Policy Exhibit are incorporated and are required; but Section 20(e) and the Prevailing Wage Exhibit are not incorporated and are not required.
- ☐ Prevailing wages but not living wage, in which case: Section 20(e) and the Prevailing Wages Exhibit are incorporated and are required; but Section 20(a) through (d) and the Living Wage Policy Exhibit are not incorporated and are not required.
- ☐ Both living wage and prevailing wages, in which case Section 20, the Living Wage Policy Exhibit, and the Prevailing Wages Exhibit are incorporated and required.
- ☐ Neither living wage nor prevailing wages, in which case Section 20, the Living Wage Policy Exhibit, and the Prevailing Wages Exhibit are <u>not</u> incorporated and are <u>not</u> required.

(11) Addresses for Notice:

FOR VENDOR:

2400 Eastman Avenue
Oxnard, CA 93030
Attn: Todd Barrett, General Manager

FOR CITY:

111 S. Del Norte Boulevard
Oxnard, CA 93030
Attn: Todd Vasquez-Housley, Environmental Resources Division Manager

(12) Contact Emails:

VENDOR'S PROJECT MANAGER:

tbarrett@vencosweep.com

CITY'S PROJECT MANAGER:

toddvhousley@oxnard.org

The Agreement for Trade Services is attached hereto and incorporated herein by this reference. The following exhibits are also attached hereto and incorporated herein by this reference into the Agreement:

- ☒ Scope of Services Exhibit
- ☒ Rates and Costs Exhibit
- ☒ Schedule of Services Exhibit
- ☒ Living Wage Policy Exhibit
- ☐ Prevailing Wages Exhibit
- ☒ Insurance Exhibit (INS-D)

COUNCIL APPROVED
10-06-2020 LG
DATE

AGREEMENT FOR TRADE SERVICES

THIS AGREEMENT FOR TRADE SERVICES ("Agreement") is entered into in Ventura County, California, on the date that is written as "(1) Agreement Start Date" on the Cover Page, which is attached hereto and incorporated herein by this reference. This Agreement is entered by and between the City of Oxnard ("City") and the person or entity listed as "(2) Vendor" on the Cover Page, subject to the following terms and conditions:

1. Scope of Services. Vendor shall provide to City the services listed as "(3) Services" on the Cover Page (the "Services"). Vendor shall provide the Services during the term of this Agreement, as set forth below, according to the schedule written as "(4) Schedule of Services" on the Cover Page, and as further explained in the Scope of Services Exhibit, which is attached hereto and incorporated herein by this reference. In the event of any conflict between the terms of this Agreement and any incorporated document(s), the terms of this Agreement shall control.

2. Term. This Agreement shall begin on the date that is written as "(1) Agreement Start Date" on the Cover Page and shall end on the date that is written as "(5) Agreement Ending Date" on the Cover Page. Time is of the essence in this Agreement.

3. Compensation. For the Services performed during the term of this Agreement, City shall pay Vendor an amount not to exceed the amount that is listed as "(6) Total Agreement Amount" on the Cover Page, at the rates listed in the Rates and Costs Exhibit, attached hereto and incorporated herein by this reference. The rates in the Rates and Costs Exhibit shall be in effect through the end of this Agreement unless otherwise stated therein.

4. Invoices. Vendor shall submit a payment request to City by the end of each calendar month listing the Services provided, costs of those Services, and total amount due for the month. Each invoice must also list the current balance on the Agreement, including that invoice, as well as the months remaining on the term of the Agreement.

5. Most Favored Nation. Throughout the term of the Agreement, in the event Vendor provides the Services having terms more favorable than this Agreement to any person or entity other than City, Vendor shall notify City within 10 calendar days of signing the other contract, or if there is no other contract, of finalizing that deal or providing any services, whichever occurs first in time. In that notice, Vendor shall offer City to amend this Agreement to reflect such more favorable terms into this Agreement without any contingency to amend any other provision of this Agreement.

6. Acceptance of Payment. Vendor's acceptance of final payment made pursuant to this Agreement shall constitute a release of City from all claims and liabilities for compensation to Vendor for anything completed, finished or relating to the Services. City's payment shall not constitute nor be deemed a release of the responsibility and liability of Vendor for the accuracy and competency of the information provided and/or the Services performed hereunder, nor shall such payment be deemed to be an assumption of responsibility or liability by City for any defect or error in the Services performed by Vendor and its employees, agents and subcontractors. Vendor shall provide City with a completed Request for Taxpayer Identification Number and Certification, as issued by the Internal Revenue Service. If any sales tax is due for the Services performed by Vendor or materials or products provided to City by Vendor, Vendor shall pay the sales tax. City shall not reimburse Vendor for sales taxes paid by Vendor.

7. Non-binding Terms. Any terms and conditions that are typed, printed, or otherwise included in any Vendor invoice rendered pursuant to this Agreement shall be deemed to be solely for the convenience of the parties. No such term or condition shall be binding upon City, and no action by City (including, without limitation, the payment of any such invoice in whole or in part) shall be construed as binding City with respect to any such term or condition, unless the specific term or condition has been previously agreed to by Vendor and City in this Agreement or in a binding amendment thereto.

8. Non-Appropriation of Funds. Payments to be made to Vendor by City for the Services performed within the current fiscal year are within the current fiscal budget and within an available, unexhausted and unencumbered appropriation of City. In the event City does not appropriate sufficient funds for payment of the Services beyond the current fiscal year, this Agreement shall cover payment for the Services only up to the conclusion of the last fiscal year in which City appropriated sufficient funds and shall automatically terminate at that fiscal year's conclusion.

9. Coordination of Services. The Services shall be coordinated with the person in the position listed in "(7) City's Project Manager" on the Cover Page, subject to the direction of the City Manager or Department Director. Vendor hereby designates the person in the position listed in "(8) Vendor's Project Manager" on the Cover Page as the person responsible for the Services who shall coordinate with City's Project Manager in making binding decisions in line with this Agreement on behalf of Vendor.

10. Personnel. Vendor represents that it has or shall secure at its own expense all personnel required to perform the Services. Vendor shall make reasonable efforts to maintain the continuity of Vendor's staff who are assigned to perform the Services. Vendor may associate with or employ associates or subcontractors in the performance of the Services, but at all times shall Vendor be responsible for its associates and subcontractors' labor, advice or materials provided in furtherance of providing the Services. Should any of Vendor's employees, assigns or subcontractors not conduct him- or herself appropriately, as determined by the City's Project Manager, in the process of providing the Services or any portion thereof, the City's Project Manager may notify the Vendor's Project Manager, who shall immediately handle the problem, as determined appropriate by him or her, such that the problem does not persist.

11. Additional Work. City may request additional specified work under this Agreement. The City's Project Manager must authorize all such work in writing before commencement. Vendor shall perform such work, and City shall pay for such additional work, in accordance with the Rates and Costs Exhibit. Should the work not fall under any such listed rate or cost, Vendor shall submit a quote for all additional work, which the City's Project Manager must approve in writing by before any such work may commence. The City shall compensate Vendor for any work that does not fall under a rate or cost listed in the Rates and Costs Exhibit, and for which Vendor did not obtain the City's Project Manager's written approval before work commenced, as determined by the City's Project Manager in his or her sole discretion.

12. Advertising and Publicity. Vendor shall not use the name of or refer to City directly or indirectly in any advertisement, news release, or professional or trade publication without prior written approval from the City Manager. This Section shall survive the termination of this Agreement.

13. Audit. City shall have the option of inspecting, auditing and/or reproducing all records and other written materials: used by Vendor in preparing its billings to City as a condition precedent to any payment to Vendor; or for other purposes relating to the Agreement. Vendor will promptly furnish all documents requested by City. Additionally, if this Agreement is in excess of $10,000, the State Auditor may examine and audit Vendor for a period of 3 years after final payment under the Agreement. Regardless of whether a State audit is permitted, Vendor shall maintain and preserve all such records for a period of at least 3 years after final payment under the Agreement or until an audit has been completed and accepted by City, whichever occurs later. Vendor shall maintain all such records in City or to promptly reimburse City for all reasonable costs incurred in conducting the audit at a location other than in City, including but not limited to expenses for personnel, salaries, private auditor, travel, lodging, meals and overhead. Vendor shall include a copy of this Section in all contracts with its subcontractors, and Vendor shall be responsible for immediately obtaining those records or other written material from its subcontractors upon a request by the State Auditor and/or City.

14. Termination. City may terminate this Agreement at any time, with or without cause and without penalty, upon 15 calendar days' prior written notice. Such termination shall be effective on the date specified in the notice, or if no date is specified, then 15 calendar days from the date of the notice. Vendor may terminate this Agreement at any time, with or without cause and without penalty, upon 30 calendar days' prior written notice. Such termination shall be effective on the date specified in the notice, or if no date is specified, then 30 calendar days from the date of notice and only if all assignments accepted by Vendor have been completed before the date of termination. In the event of termination of this Agreement by either party due to no fault or failure of performance by Vendor, City shall pay Vendor compensation for all Services satisfactorily completed in accordance with all of the terms and provisions of this Agreement, as determined by the City, before the effective date of termination; provided, in no event shall the Vendor receive an amount exceeding that which would have been paid to Vendor for the full performance of the Services. If City pays for any materials, City shall be entitled to the title and possession of such.

15. Hold Harmless, Defense and Indemnity.

a. To the fullest extent permitted by law, Vendor shall immediately defend, indemnify, and hold harmless City, its legislative and advisory bodies, and the City's officials, directors, officers, employees, and agents (the "Indemnitees") from and against all liabilities regardless of nature, type, or cause, arising out of or resulting from or in connection with Vendor's performance of this Agreement or Vendor's failure to comply with any of its obligations contained in this Agreement. Liabilities subject to the duties to defend and indemnify include, without limitation, all claims, losses, damages, penalties, fines, and judgments; associated investigation and administrative expenses; defense costs, including but not limited to reasonable attorneys' fees; court costs; and costs of alternative dispute resolution. Vendor's obligation to indemnify applies unless it is adjudicated that any of the liabilities covered by this Section 15 are the result of the sole active negligence or sole willful misconduct of any of the Indemnitees.

The duty to defend is a separate and distinct obligation from Vendor's duty to indemnify. Vendor shall be obligated to defend in all legal, equitable, administrative, or special proceedings with counsel approved by the City Attorney immediately upon tender to Vendor of the claim in any form or at any stage of an action or proceeding, whether or not liability is established. An allegation or determination of negligence or willful misconduct by any of the Indemnitees shall not relieve Vendor from its separate and distinct obligation to defend the Indemnitees. The obligation to defend extends through final judgment, including exhaustion of any appeals. The defense obligation includes the obligation to provide independent defense counsel if Vendor asserts that liability is caused in whole or in part by the negligence or willful misconduct of the Indemnitees. If it is finally adjudicated that liability was caused by the sole active negligence or sole willful misconduct of any of the Indemnitees, Vendor may submit a claim to City for reimbursement of reasonable attorneys' fees and defense costs.

The review, acceptance or approval of Vendor's work or work product by any of the Indemnitees shall not affect, relieve or reduce Vendor's indemnification or defense obligations. This Section 15 shall survive completion of the Services or termination of this Agreement. The provisions of this Section 15 shall not be restricted by and do not affect the provisions of this Agreement relating to insurance.

16. Insurance. Vendor shall obtain and maintain during the performance of any services under this Agreement the insurance coverages listed within the insurance document stated in "(9) Insurance Coverage" on the Cover Page and in the Insurance Exhibit, which is attached hereto and incorporated herein by this reference, unless the Risk Manager waives, in writing, the requirement that Vendor obtain and maintain such insurance coverages. Such insurance must be issued by a company satisfactory to the Risk Manager. Vendor shall, before performance of any Services pursuant to this Agreement, file with the Risk Manager evidence of insurance coverage as specified in "(9) Insurance Coverage" on the Cover Page and in the Insurance Exhibit. Maintenance of insurance coverages by Vendor is a material element of this Agreement. Vendor's failure to maintain or renew insurance coverages or to provide renewal evidence may be considered a material breach of this Agreement.

17. Documents and Materials.

i) All final computations, exhibits, files, plans, correspondence, reports, drawings, designs, data, photographs, specifications, information, images, video files, media, or other deliverables prepared, created, drawn, calculated, photographed or developed by Vendor pursuant to this Agreement ("Documents and Materials") shall be the property without restriction or limitation upon its use, duplication or dissemination by the City. All Documents and Materials shall be considered "works made for hire," and all Documents and Materials and any and all intellectual property rights arising from their creation, including, but not limited to, all copyrights and other proprietary rights, shall be and remain the property of the City without restriction or limitation upon their use, duplication or dissemination by the City. Vendor shall not obtain or attempt to obtain copyright protection as to any Documents and Materials. Vendor hereby assigns to the City all ownership and any and all intellectual property rights to the Documents and Materials that are not otherwise vested in the City pursuant to this Section 17.

ii) Vendor shall deliver all Documents and Materials to City's Project Manager upon completion of the Services or termination of this Agreement without additional cost or expense to the City. Additionally, anytime at City's request, City shall be entitled to possession of, and Vendor shall furnish to City's Project Manager within 10 calendar days, any or all of the Documents and Materials without additional

cost or expense to the City. In both situations, if Vendor prepares Documents and Materials on a computer, Vendor shall provide City with said Documents and Materials both in a printed format and in an electronic format that is acceptable to the City. Vendor may retain copies of these Documents and Materials but must request permission from the City before use, duplication or dissemination these Documents and Materials for any purpose other than for the Services provided to the City pursuant to this Agreement.

iii) Any substantive modification of the Documents and Materials by City staff or any use of the completed Documents and Materials for other City projects, or any use of uncompleted Documents and Materials, without the written consent of Vendor, shall be at City's sole risk and without liability or legal exposure to Vendor.

iv) Vendor warrants and represents that it has secured all necessary licenses, consents or approvals to use any instrumentality, thing or component as to which any intellectual property right exists, including computer software, used in the rendering of the Services and the production of all Documents and Materials, and that the City has full legal title to and the right to use, duplicate or disseminate the Documents and Materials. Vendor shall defend, indemnify and hold Indemnitees harmless from any loss, claim or liability in any way related to a claim that City's use of any of the Documents and Materials is violating federal, state or local laws, any contractual provisions, or any laws relating to trade names, licenses, franchises, copyrights, patents or other means of protecting intellectual property rights and/or interests in products or inventions. Vendor shall bear all costs arising from the use of patented, copyrighted, trade secret or trademarked documents, materials, equipment, devices or processes in connection with its provision of the services and Documents and Materials. In the event the use of any of the Documents and Materials by the City is held to constitute an infringement and the use of any of the same is enjoined, Vendor, at its own expense, shall: secure for City the right to continue using the Documents and Materials by suspension of any injunction, or by procuring a license or licenses for City; or modify the Documents and Materials so that they become non-infringing while remaining in compliance with the requirements of this Agreement.

v) This Section 17 shall survive the termination of this Agreement.

18. Confidentiality of Information.

a. For the purposes of this Agreement, "Confidential Information" means all information, in whatever form transmitted, relating to the past, present or future business affairs of the City, including without limitation, (i) technical information, including patent, copyright, trade secret, and other proprietary information, techniques, sketches, drawings, models, inventions, processes, apparatus, equipment, algorithms, software programs, software source documents, and formulas; or (ii) non-technical information, including without limitation finances, financial and accounting data and information, suppliers, customers, customer lists, purchasing data and any other information belonging to the City or to a third party whose information is in the City's possession or control under obligations of confidentiality, and which is disclosed to Vendor or is developed by Vendor in whole or in part at the City's expense.

b. All Documents and Materials shall be considered Confidential Information and shall not be reproduced, transmitted, disclosed or used by the Vendor without the written consent of the City, except as may be necessary for Vendor to fulfill its obligations to the City.

c. Notwithstanding the above, these limitations shall not apply to information that (i) is already known to Vendor at the time of that information's disclosure or becomes publicly known through no wrongful act or omission of Vendor, (ii) is communicated to a third party with the express written consent of City and is not subject to restrictions on further use or disclosure, (iii) is independently developed by Vendor and has no relation to this Agreement, or (iv) is required by law, court order, court-issued subpoena or other legal process to be disclosed; provided, however, that before making such disclosure, Vendor shall immediately provide City with written notice and a reasonable opportunity for City to object to the disclosure or to take action to maintain the confidentiality of the information, unless such prior disclosure is legally impermissible.

d. Vendor shall use reasonable care to protect the Confidential Information. In the event of a breach or threatened breach of this Agreement, City shall be entitled to obtain an injunction prohibiting any such breach, the costs of which shall be paid by Vendor. Any relief granted shall be in addition to and not in lieu of any other legal or equitable relief, including money damages. The parties acknowledge that Confidential Information is valuable and unique and that disclosure of the Confidential Information in breach of this Agreement may result in irreparable injury to the City.

e. Other than an obligation upon the City to deal in good faith, the City makes no warranties and shall bear no liability or responsibility for errors or omissions in any Confidential Information disclosed under this Agreement or for any business decisions made by Vendor in reliance on any Confidential Information disclosed under this Agreement.

f. This Section 18 shall survive the termination of this Agreement.

19. Independent Contractor. Vendor is and shall at all times remain, as to City, a wholly independent contractor. Neither City nor any of its employees or agents shall have control over the conduct of Vendor or any of its employees, except as stated in this Agreement. Vendor has and shall retain the right to exercise full control over the employment, direction, means of performance, location, compensation and discharge of all persons assisting Vendor, and it is free to dispose of all portions of its time which it is not obligated to devote to City in such a manner and to such persons, firms, or corporations as Vendor wishes except as expressly provided in this Agreement. This Agreement shall not be interpreted to prevent or preclude Vendor from rendering any services for Vendor's own account or to any other person or entity as Vendor in its sole discretion shall determine; provided, however, that performing such services shall not materially interfere with the Services Vendor shall perform for the City. Except as City's Project Manager specifies in writing, Vendor and its employees and agents have no authority, express or implied, to act on behalf of City in any capacity, to incur any debt, obligation or liability on behalf of City, bind City in any manner, or otherwise act on behalf of City as an agent. Vendor and its employees are not employees of City. Vendor and its employees are not entitled to receive from City any of the benefits or rights afforded employees of City, including but not limited to reserve leave, sick leave, vacation leave, holiday leave, compensatory leave, Public Employees Retirement System benefits, and health, life, dental, long-term disability and workers' compensation insurance benefits. Vendor shall not, at any time or in any manner, represent that it or any of its agents or employees are in any manner agents or employees of City. Vendor agrees to pay all required taxes on amounts paid to Vendor under this Agreement, and to indemnify and hold City harmless from any and all taxes, assessments, penalties, and interest asserted against City by reason of the independent contractor relationship created by this Agreement. Vendor shall be solely responsible for, and shall save City harmless from, all matters relating to the payment of Vendor's subcontractors, material suppliers, directors, officers, employees, agents and representatives, including compliance with social security requirements, federal and State income tax withholding, and all other regulations governing employer-employee relations, as applicable. City shall have the right to offset against the amount of any compensation due to Vendor under this Agreement any amount due to City from Vendor as a result of its failure to promptly pay to City any reimbursement or indemnification arising under this Section.

20. Wages. If the first option is selected in response to (10) on the Cover Page and, thus, the payment of living wage is required, only this paragraph and subsections (a) through (d) of this Section 20 shall apply. If the second option is selected in response to (10) on the Cover Page and, thus, the payment of prevailing wages (and related Labor Code provisions) is required, only this paragraph and subsection (e) of this Section 20 shall apply. If the third option is selected in response to (10) on the Cover Page and, thus, both the payment of living wage and prevailing wages (and related Labor Code provisions) is required, this paragraph and subsections (a) through (e) shall apply, meaning Vendor shall compensate all of its employees providing services to City in accordance with both the City's Living Wage Policy and State-required prevailing wages. In the event of a conflict between the City's Living Wage Policy and State-required prevailing wages, the higher of the two shall prevail. If the fourth option is selected in response to (10) on the Cover Page and, thus, neither the payment of living wage nor prevailing wages (and related Labor Code provisions) is required, no part of this Section 20 shall apply.

a. If either the first or third option is selected in response to (10) on the Cover Page, Vendor shall compensate any employee of Vendor who provides Services to the City under this Agreement in accordance with the Living Wage Policy Exhibit, which is attached hereto and incorporated herein by this reference. While this Agreement is in effect, Vendor shall pay such employee no less than $16.30 per hour for each hour that such

employee provides services under this Agreement. This hourly rate shall be adjusted on July 1, 2020, and each July 1 thereafter, according to the percentage change in the Consumer Price Index, all items, prepared by the Bureau of Labor Statistics for the Los Angeles area relating to all urban consumers (CPI-U), index base 1982-84=100, comparing May of the previous year to May of the current year. In addition, while this Agreement is in effect, Vendor shall provide to such employee no less than 96 hours of paid leave per calendar year.

Vendor agrees to post, at a location readily accessible to those employees providing services to the City, a copy of the Living Wage Policy adopted by the Oxnard City Council on July 9, 2002, and effective October 1, 2002.

If Vendor fails to compensate such employee pursuant to the Living Wage Policy, the City Manager or designee shall terminate this Agreement on written notice to Vendor, effective immediately.

In addition, if Vendor fails to comply with the Living Wage Policy in any manner, Vendor shall pay to City a fine of $500 and shall pay to any employee providing services under this Agreement a penalty of three times the amount or value of the compensation owed to such employee under the Living Wage Policy. Vendor shall pay such fine and penalty within 15 days after the City Manager or designee provides written notice to Vendor of the amount owed.

If either the second or third option is selected in response to (10) on the Cover Page, in accordance with Labor Code Section 1770 *et seq.*, the Project is a "public work." The Vendor shall pay wages in accordance with the determination of the Director of the Department of Industrial Relations ("DIR") regarding the prevailing rate of per diem wages. Copies of those rates are on file with the Public Works Director and are available to any interested party upon request. The Vendor shall post a copy of the DIR's determination of the prevailing rate of per diem wages at the job site. The Vendor shall comply with all provisions of the Prevailing Wage Exhibit, which is attached hereto and incorporated herein by this reference.

21. Nondiscriminatory Employment. Vendor shall not unlawfully discriminate against any individual based on race, color, religion or religious creed, national origin, ancestry, ethnic group identification, primary language, physical disability, mental disability, medical condition, genetic information, marital status, gender, gender identity, gender expression, sex, sexual orientation, age, immigration status, citizenship or military and veteran status. Vendor understands and agrees that it is bound by and will comply with all legal nondiscrimination mandates. For every subcontractor who will perform Services, Vendor shall be responsible for such subcontractor's compliance with this Section.

22. Vendor's Representations. Vendor represents, covenants and guarantees that: a) Vendor is licensed, qualified, and capable of furnishing the labor, materials, and expertise necessary to perform the Services in accordance with the terms and conditions set forth in this Agreement; b) there are no obligations, commitments, or impediments of any kind that will limit or prevent Vendor's full performance under this Agreement; c) to the extent required by the standard of practice, Vendor has investigated and considered the scope of Services performed, has carefully considered how the Services should be performed, and understands the facilities, difficulties and restrictions attending performance of the Services under this Agreement.

23. Compliance with Laws. In performing the Services under this Agreement, Vendor shall comply with all applicable laws, ordinances and regulations. Before performing the Services under this Agreement, Vendor shall obtain all required licenses and permits, including a City business tax certificate.

24. Conflict of Interest. If, in performing the Services set forth in this Agreement, Vendor makes, or participates in, a "governmental decision" as described in Title 2, Section 18701(a)(2) of the California Code of Regulations, or performs the same or substantially all the same duties for City that would otherwise be performed by a City employee holding a position specified in City's conflict of interest code, Vendor shall be subject to City's conflict of interest code, the requirements of which include the filing of one or more statements of economic interests disclosing the relevant financial interests of Vendor's personnel providing the Services set forth in this Agreement. Furthermore, Vendor shall not to accept any employment or representation during the term of this Agreement or within 12 months after completion of the Services which is or may likely make Vendor "financially

interested," as provided in California Government Code Sections 1090 and 87100, in any decisions made by City on any matter in connection with which Vendor has been retained pursuant to this Agreement.

25. Fictitious Name. If Vendor has a fictitious name, Vendor shall submit to City a new Fictitious Business Name Statement approved by any California county before Vendor's prior Fictitious Business Name Statement expires if such expiration may occur during the term of this Agreement, including any term amendment.

26. Non-Assignability. Vendor shall not assign or transfer any interest in this Agreement or any part thereof, whether by assignment or novation, without City's prior written consent, which may be withheld for any reason or for no reason at all. Any purported assignment without written consent shall be null, void, and of no effect, and Vendor shall hold harmless, defend and indemnify Indemnitees regarding all Claims arising from or relating to any unauthorized assignment.

27. Protection of Services. Vendor shall continuously maintain adequate protection of all of Vendor's work from damage and shall protect the City's property from any and all injury or loss arising in connection with this Agreement. Vendor shall take all necessary precaution for the safety of employees on the job and shall comply with all applicable provisions of federal, State and municipal safety laws and building codes to prevent accidents or injury to persons on, about or adjacent to any premises where the Services are being performed.

28. Successors and Assigns. This Agreement shall be binding upon and inure to the benefit of the heirs, executors, administrators, successors and assigns of Vendor.

29. Applicable Law; Venue. The validity, interpretation, and performance of this Agreement shall be controlled by and construed under the laws of the State of California, excluding California's choice of law rules. Venue for any such action relating to the Agreement shall be in the Ventura County Superior Court.

30. Titles. The titles used in this Agreement are for convenience only and shall in no way define, limit or describe the scope or intent of this Agreement or any part of it.

31. Force Majeure. Neither City nor Vendor shall be responsible for delays or failures in performance resulting from acts beyond the control of either party. Such acts shall include but are not be limited to acts of God, riots, acts of war, epidemics, fire, earthquakes, or other disasters.

32. Authority. Any person executing this Agreement on behalf of Vendor warrants and represents that s/he has the authority to execute this Agreement on behalf of Vendor and to bind it to the performance of these obligations.

33. Binding Agreement. The parties do not intend this Agreement to be binding upon them and shall not be held liable to its terms until it is fully executed by all required signers.

34. Cumulative Remedies. All rights and remedies of City herein shall be in addition to all other rights and remedies available at law or in equity, including, without limitation, specific performance for the enforcement of this Agreement, and temporary and permanent injunctive relief.

35. Integration; Amendment. This Agreement, including any other documents incorporated herein by specific reference, constitutes the entire and integrated agreement of City and Vendor regarding the subject matter described herein. This Agreement supersedes all prior oral or written communications, negotiations, representations, agreements and promises. This Agreement may not be modified or amended, nor any provision or breach waived, except in a writing, signed by both parties, that expressly refers to this Agreement.

36. Construction. In the event of any asserted ambiguity in or dispute regarding the interpretation of any matter herein, the interpretation of this Agreement shall not be resolved by any rules of construction providing for interpretation against the party who causes the uncertainty to exist or who drafted the Agreement in whole or in part.

37. No Waiver. Waiver by either party of any one or more of the conditions of performance under this Agreement shall not be a waiver of any other condition of performance under this Agreement. In no event shall the making by City of any payment to Vendor constitute or be construed as a waiver by City of any breach of covenant,

or any default that may then exist on the part of Vendor, and the making of any such payment by City shall in no way impair or prejudice any right or remedy available to City with regard to such breach or default.

38. Attorneys' Fees. The prevailing party shall be entitled to recover reasonable costs, attorneys' fees (including the reasonable value of the services rendered by the City Attorney's Office) and expenses, including investigation fees and expert witness fees, in addition to any other relieve to which that party may be entitled, in any legal action or other proceeding, including an action for declaratory relief, for the enforcement of this Agreement or because of an alleged dispute, breach, default or misrepresentation in connection with this Agreement.

39. Notice. Except as otherwise required by law, a notice or communication authorized or required by this Agreement shall be in writing and shall be deemed received—on (a) the day of delivery if delivered by hand or overnight courier service during City's regular business hours or (b) on the third business day following deposit in the United States mail, postage prepaid—to the addresses listed as "(11) Addresses for Notice" on the Cover Page or to such other address as one party may notify the other in writing.

40. Counterparts. This Agreement may be executed in one or more counterparts, each of which shall be deemed to be an original and all of which, when taken together, shall be deemed to be one and the same agreement. A signed copy of this Agreement transmitted by email to either of City or Vendor's Project Managers' emails listed in "(12) Contact Emails" on the Cover Page or by other means of electronic transmission shall be deemed to have the same legal effect as delivery of an original executed copy of this Agreement for all purposes.

41. Severability. If any term or portion of this Agreement is held to be invalid, illegal, or otherwise unenforceable by a court of competent jurisdiction, the remaining provisions of this Agreement shall continue in full force and effect.

[Signatures on next page]

IN WITNESS WHEREOF, the parties hereto have executed the Agreement on the date that is written as "(1) Agreement Start Date" on the Cover Page.

CITY OF OXNARD

☒ Tim Flynn, Mayor[1] Date
☐ Alexander Nguyen, City Manager
☐ Daniel Wilhitte, Purchasing Manager
☐ Buyer

ATTEST:

Michelle Ascencion, City Clerk (only if Mayor signs) Date

APPROVED AS TO FORM:

Stephen M. Fischer, City Attorney (always required) 10/1/2020 Date

VENCO

Bill Barrett, President[2] Date

Todd Barret, General Manager Date

[1] The City Council must authorize and the Mayor must sign any agreement over $200,000 annually. The City Manager may authorize and sign any agreement over $100,000 but up to $200,000 annually. The Purchasing Manager may authorize and sign any agreement up to $100,000 annually. A Buyer may authorize and sign any agreement up to $25,000 annually.

[2] The City requires the following for any contract:

- For a corporation, the signatures of the Board President, CEO or Vice President and of the Board Secretary, Assistant Secretary, CFO or Assistant Treasurer;
- For an LLC, the signatures of at least two managers of the LLC (company directors, not lower-level managers); or
- For a partnership, the signature of a partner. If the partnership is a limited partnership, the signer must be a general partner.

If the company has a different structure, or if the above-listed persons are not the appropriate signers, please submit to the City Attorney legally-binding documentation stating who can sign and bind your company.

IN WITNESS WHEREOF, the parties hereto have executed the Agreement on the date that is written as "(1) Agreement Start Date" on the Cover Page.

CITY OF OXNARD

Tim Flynn 10/7/20

☒ Tim Flynn, Mayor[1] Date
☐ Alexander Nguyen, City Manager
☐ Daniel Wilhitte, Purchasing Manager
☐ Buyer

ATTEST:

Michelle Ascencion 10/7/20

Michelle Ascencion, City Clerk (only if Mayor signs) Date

APPROVED AS TO FORM:

10/1/2020

Stephen M. Fischer, City Attorney (always required) Date

VENCO

BBarrett 10-5-2020

Bill Barrett, President[2] Date

Todd Barrett 10/5/2020

Todd Barret, General Manager Date

[1] The City Council must authorize and the Mayor must sign any agreement over $200,000 annually. The City Manager may authorize and sign any agreement over $100,000 but up to $200,000 annually. The Purchasing Manager may authorize and sign any agreement up to $100,000 annually. A Buyer may authorize and sign any agreement up to $25,000 annually.

[2] The City requires the following for any contract:

- For a corporation, the signatures of the Board President, CEO or Vice President and of the Board Secretary, Assistant Secretary, CFO or Assistant Treasurer;
- For an LLC, the signatures of at least two managers of the LLC (company directors, not lower-level managers); or
- For a partnership, the signature of a partner. If the partnership is a limited partnership, the signer must be a general partner.

If the company has a different structure, or if the above-listed persons are not the appropriate signers, please submit to the City Attorney legally-binding documentation stating who can sign and bind your company.

SCOPE OF SERVICES EXHIBIT

1.0 Curb Mileage

The Agreement curb mileage is calculated based on City's Geographical Information System data. City currently has approximately 21,126.4 curb miles swept annually. The chart below identifies the current curb mile types and frequencies swept. See Scope of Services Exhibit Attachment No. 1 for a general map of the street categories listed below. See Scope of Services Exhibit Attachment No. 2 for a detailed map of City medians.

City of Oxnard Street Sweeping Agreement	Annual Number of Sweeps	Total Curb Miles Per Sweep	Total Curb Miles Per Month	Total Annual Curb Miles
Residential/Restricted - Bi-Weekly	24	590	1,180	14,160
Less: No Residential/Restricted Sweeping Holiday Weeks	10 Holiday Weeks		(295)	(2,950)
Alleyway – 5th week of Every Month & Holiday Weeks When Residential Sweeping is Suspended	15	~140	140	2,100
Arterial – Bi-Weekly	24	309	618	7,416
Downtown – Weekly	52	7.7	30.8	400.4
Total Annual Curb Miles				21,126.4

2.0 Residential/Restricted Streets

The residential streets in City are converted to four routes following the weekly solid waste collection routes and alternating sides of the street with no residential street sweeping on a week with a City observed holiday (see Section 9 for observed holidays). Street sweeping will take place within the areas designated by the established four routes. Vendor is required to meet all posted times for sweeping. Under the direction of the City's Project Manager, Vendor shall be responsible for the supervision of the restricted parking program, coordinate the Police Department cadets for City's enforcement times for sweeping the restricted areas, and communicate directly with the public in regards to all aspects of the program. Vendor's personnel shall be fully versed in all aspects of coordinating a street sweeping restricted parking program. All aspects of the program shalle be supervised in the field. Under the direction of the City's Project Manager, Vendor shall coordinate street sweeping and enforcement with the Police Department, Public Works Department, and Vendor's staff. Vendor shall have adequate personnel and equipment available to meet the posted times in all restricted parking areas within City. In the event Vendor's supervisor determines a posted restricted time window will not be met, additional equipment shall be dispatched immediately to adhere to the posted times. Vendor will be penalized $100.00 for any sweeping route that is not swept during the posted time, except due to a City observed holiday or hazardous conditions as described in Sections 7, 8, 9, and 16. Missing the posted time window in restricted parking areas three times in any thirty-day period shall be grounds for termination of this Agreement.

3.0 Arterial Streets

Arterial streets within the City consist of approximately 309 curb miles. Vendor shall be responsible for adhering to the time restrictions stipulated in Section 9. Arterial streets are to be swept twice per month on a bi-weekly schedule. Vendor shall provide a professional digitally rendered map displaying the proposed arterial street sweeping routes and schedule to City's Project Manager. Arterial sweeping routes must be mutually agreed upon by Vendor and City's Project Manager prior to commencing arterial street sweeping. Subsequent arterial sweeping route changes and modifications must be approved and mutually agreed upon by Vendor and City's Project Manager.

4.0 Alleyways

Alleyways within the City consist of approximately 140 curb miles. Alleyways are to be swept once per month during the 5th week of every month and on holiday weeks, when Residential sweeping is suspended. Prior to the start of a new calendar year, Vendor and City's Project Manager shall create a mutually agreed upon alleyway sweeping calendar which will be made available for public distribution. Vendor shall also provide a professional digitally rendered map displaying the proposed alleyway street sweeping routes to City's Project Manager. Alleyway sweeping routes must be mutually agreed upon by Vendor and City's Project Manager prior to commencing alleyway street sweeping. Subsequent alleyway route changes and modifications must be approved and mutually agreed upon by Vendor and City's Project Manager.

5.0 Downtown

The City Downtown area consists of approximately 7.7 curb miles (see Scope of Services Exhibit Attachment No. 1 and Scope of Services Exhibit Attachment No. 2). Downtown area is to be swept weekly during the weekend (Friday, Saturday, or Sunday), according to the time restrictions listed in Section 9.

6.0 Routing

Scope of Services Exhibit Attachment No. 1 provides a map of the City's street sweeping routes by category. Scope of Services Exhibit Attachment No. 2 provides a map of the City's medians by category. A map delineating the established four residential/restricted sweeping routes, which follow the current residential waste collection routes, can be found in the Schedule of Services Exhibit Attachment No. 1. When requested, Vendor shall provide complete and comprehensive street sweeping routing services as a part of the Agreement. This service shall include comprehensive planning for and routing of all existing and future of street sweeping routes, and all added curb miles as a result of new development. Vendor shall provide comprehensive professional digitally-rendered color-coded maps of new routes indicating the posted streets, the restricted time window for each side of the street and the route starting point. City's Project manager shall approve all street sweeping rerouting prior to a change in routing. Sweeping routes will in all cases follow the day after the solid waste collection schedule. City reserves the right to limit the number of curb miles projected per route in residential restricted and non-restricted parking.

7.0 Sweeping Method

Sweeping will normally require one pass over an area with the left and/or right gutter brooms, and pickup broom or pickup head in contact with the surface being swept at all times. A minimum width of eight feet shall be cleaned with each pass of the sweeper as measured from curb face to the centerline of the street. Where debris or other conditions warrant, Vendor will make additional passes so as to clean the entire street at no additional cost to City. Cross gutters, tum pockets, painted medians, median "bull noses" and intersections are considered part of the curb mileage and are to be swept along with the curb line on each sweeping route (see Scope of Services Exhibit Attachment No. 1 and Scope of Services Exhibit Attachment No. 2). The downtown sweeping route has parking areas that are inaccessible to the street sweeper due to landscape planters. These corners are to be cleaned by hand during the weekly sweeping operation. Sweeping speeds will be maintained to thoroughly clean the streets as conditions warrant. At no time shall the sweeping speed exceed six miles per hour. Adequate water shall be used at all times to maximize dust control.

Where obstructions impede the sweeping operation (such as rocks, palm fronds, and other objects that can be handled by the sweeper operator and/or field supervisor), Vendor shall remove these items by hand rather than driving around these items. Items that are too large to be manually put into the sweeper's hopper, such as discarded furniture or other large bulky items or items that obstruct the sweeping route such as tree branches or basketball hoops, must be reported immediately to the City's Project Manager and documented on the daily obstruction report for removal by City (see section 17.2 and 17.3). Vendor is not required to sweep "unsweepable" debris. The City's Project Manager shall determine if an "unsweepable" condition exists.

In areas where drainage is a problem, Vendor shall make as many passes as necessary to remove debris from standing water. In addition, all sand, dirt, rocks, gravel, vegetation, and other sweepable debris shall be removed from the street as a result of the sweeping operation.

8.0 Weather and Hazardous Conditions

When inclement weather or hazardous conditions such as traffic accidents, flooding, demolition, construction, hazardous spills, natural catastrophes, or related incidents interrupt the regular street sweeping schedule, Vendor will not be paid for the curb miles not swept. Street sweeping operations shall resume as scheduled as soon as weather or conditions permit.

9.0 Sweeping Schedule

All curb miles for each street sweeping route will be swept per the established schedule as listed in the SCHEDULE OF SERVICES EXHIBIT.

Vendor shall have sufficient staff and equipment to meet all sweeping schedules. In the event of an emergency, Vendor shall have additional personnel and equipment to dispatch to the scene of the incident. Vendor shall not remove a sweeper from an established route to meet an emergency need. Rates charged for emergency/after hours sweeping will be at the rates quoted in the unit price schedule in the RATES AND COSTS EXHIBIT. In a week with a City observed holiday, Vendor shall not sweep residential streets on any day in that week, and respective curb miles shall not be billed to City. Vendor arterial, downtown, and parking lot route schedules shall be adjusted to accommodate the holiday.

The City observes the following holidays:
New Years Day (January 1st)
Martin Luther King Day (Third Monday in January)
Presidents Day (Third Monday in February)
Cesar Chavez Day (March 31st)
Memorial Day (Last Monday in May)
Independence Day (July 4th)
Labor Day (First Monday in September)
Veterans Day (November 11th)
Thanksgiving Day (By Presidential proclamation, usually the fourth Thursday in November)
Christmas Day (December 25th)

10.0 Inspection

All work performed pursuant to this Agreement will be inspected by the City's Project Manager, which includes GPS monitoring. Streets not cleaned and left with sweepable debris such as sand, dirt, vegetation, sludge, and refuse shall be re-swept at no additional cost to City. In addition, should Vendor fail to sweep all the curb miles contained in any established sweeping route, Vendor shall be subject to a penalty of $100.00 per occurrence. Incomplete sweeping of established routes three times in any thirty-day period shall be grounds for termination of this Agreement.

11.0 Equipment

Vendor shall utilize the below listed equipment to meet the service requirements of Agreement:

a. 2016 Tymco 600 Regenerative Air Sweeper
b. 2016 Tymco 600 Regenerative Air Sweeper
c. 2016 Tymco 435 Regenarative Air Sweeper
d. 2016 Elgin Broom Bear Mechanical Broom Sweeper

Vendor shall have the necessary backup equipment ready and available so as to avoid service interruption. All backup equipment shall be equipped with Global Positioning System (GPS) tracking and reporting capabilities.

Sweeping equipment used to perform the work on this Agreement shall be no more than five years old. City shall not provide storage facilities for Vendor's equipment or operations gear. Vendor shall provide all necessary facilities for the storage of equipment, parts, supplies and equipment maintenance as is required to perform the services under this Agreement.

12.0 Debris Disposal

Debris disposal is the responsibility of Vendor. City's Wastewater Division shall pay the direct tonnage fees for debris collected by Vendor from residential, alleyways, downtown, arterials, industrial, and commercial areas, medians and parking lots that are swept by Vendor. Weigh tickets shall be mailed from the Del Norte Regional Recycling and Transfer Station (Del Norte Facility), located at 111 South Del Norte Boulevard in Oxnard to: City of Oxnard – Wastewater Division, 6001 Perkins Road, Oxnard, CA 93033.

For special on-call sweeping services that require roll-off containers for the disposal and containment of sweeping debris, the Vendor shall use roll-off containers provided by the City's Environmental Resources Division. Vendor shall contact the City's Environmental Resources Division for the order of, placement, removal, and empty of the roll-off container. The management of and the costs associated with the roll-off containers is the responsibility of Vendor. Rates for the use of roll-off conatiners are listed in the City Ordinance that establishes solid waste system user fees and charges. The Vendor can call the City Environmental Resources Division for further details of rates for roll-off containers. Arrangements for the daily roll-off container placement and pickup shall be made twenty-four hours in advance and roll-off containers shall not be permitted to remain overnight. Debris that accumulates around the roll-off container during the dumping operation shall be swept within two hours of the container being removed by City's Environmental Resources Division. No debris shall be placed into the roll-off container except that generated by the sweeping operations pursuant to this Agreement. Environmental Resources Division will mail weigh tickets associated with the street sweeping Agreement to City's Wastewater Division for reimbursement of street sweeping debris received by the Environmental Resources Division.

13.0 Water Usage

Water for all sweeping operations shall be the responsibility of Vendor. Arrangements for the cost, payment, and method of loading shall be coordinated with City's Water Division. Water shall be used during all sweeping operations to eliminate airborne dust. Vendor shall not discharge liquid waste from sweeper units onto City streets or into the storm drain system. Washing of sweepers on City property is strictly prohibited. Any and all washing of sweeper units shall take place at Vendor's facility.

14.0 Parking Lots

Parking lots swept will be thoroughly cleaned. Areas inaccessible to the sweeper shall be cleaned using either a vacuum or blower device. All debris shall be picked up by the sweeper unit and disposed of at City's expense, as described in Section 12.0. Sweeping shall include the removal of all sand, gravel, dirt, litter, vegetation and any and all other debris that accumulates between scheduled sweeping days. Sweeping shall take place at times when the parking lots are vacant. (See Scope of Services Exhibit Attachment No. 3)

15.0 Del Norte Regional Recycling and Transfer Station (Del Norte Facility) and Surrounding Streets

The site at the Del Norte Facility located at 111 South Del Norte Boulevard in Oxnard and the streets of Del Norte Boulevard and Sturgis Road that bound the Del Norte Facility shall be swept and thoroughly cleaned. Sweeping at the Del Norte Facility shall occur as established in the SCHEDULE OF SERVICES EXHIBIT. Areas to be swept include parking lots, loading docks, truck and trailer staging areas, scale areas, ingress areas, and all other vehicle traffic asphalt pavement surface areas at the facility site. Service frequency may be adjusted from time-to-time and special on-call spot sweeps shall be ordered by the City's Project Manager as needed.

Sweeping on Del Norte Boulevard from Sturgis Road to Fifth Street and on Sturgis Road from Del Norte Boulevard to Elevar Street shall occur as established in the SCHEDULE OF SERVICES EXHIBIT.

16.0 Heavy Sweeping Conditions

City has several areas that are adjacent to the beach. Sand accumulates in these areas that exceeds the capability of standard street sweeping equipment. When this condition occurs, Vendor shall make arrangements for the removal of the heavy accumulation of sand at a cost to the City. City will pay only for the cost of the heavy equipment used for sand removal. City's Project Manager must review and approve proposed cost and schedule of work, prior to the start of sand clean up. The charge to the City must be backed up by supporting documentation in the form of an itemized quote or price schedule. As an alternative, City may elect to remove the heavy accumulations of sand utilizing City personnel and equipment, at no penalty to Vendor. In any event, it is Vendor's responsibility to sweep all sand from the beach area streets within the established sweeping schedule.

Vendor shall have sufficient personnel and equipment available at all times to meet the demands of the beach area sweeping requirements.

Vendor, at no additional cost to City, shall supply personnel to place City-supplied temporary "No Parking" signs on all beach area streets, forty-eight hours prior to any heavy equipment sand removal operations. The City's Project Manager shall be the sole judge as to whether the conditions warrant additional heavy equipment for sand removal. Vendor is responsible for sweeping these beach areas from curb line to curb line, including intersections and cross gutters each scheduled sweeping day. Vendor is responsible for investigating the conditions in these beach areas and throughout City for street sweeping requirements that are not typical of normal residential and arterial street sweeping operations.

17.0 Required Reporting Schedule and Format

17.1 Monthly Reports Submitted with Vendor Invoice to City

Name of Vendor:_____
Address:_____
City/State/Zip: _____
Phone:_____
Fax:_____
Contact:_____

Date:_____
Invoice No.:_____
Tax ID No.:_____
Agreement No.:_____
Service Month and Year:_____
Vendor's Signature:_____

No.	Type of Service	Total monthly curb miles	Monthly curb miles missed	Total monthly curb miles completed	Rate per curb mile completed	Total monthly charge
1	Residential/Restricted Bi-Weekly	1,180			$	$
2	Arterial – Bi-Weekly	618			$	$
4	Downtown – Weekly	30.8			$	$
5	Alleyway – 5th week of Every Month & Holiday Weeks When Residential/Restricted Sweeping is Suspended	140			$	$
6	Monthly Charge:					$

Parking Lots

WEEKLY SERVICE				MONTHLY SERVICE			
Lot No.	Price Per Sweep	Number of Weeks Completed	Monthly Charge	Lot No.	Price Per Sweep	Completed Yes or No	Monthly Charge
4	$			1	$		
5	$			2	$		
19	$			6	$		
20	$			7	$		
21	$			8	$		
22	$			9	$		
23	$			10	$		
24	$			11	$		
25	$			12	$		
26	$			13	$		
27	$			14	$		
28	$			15	$		
29	$			16	$		
30	$			17	$		
31	$			18	$		
32	$			48	$		
33	$			49	$		
34	$			50	$		
35	$			51	$		

36	$			56	$		
37	$			58	$		
38	$			59	$		
39	$			60	$		
40	$			61	$		
41	$			62	$		
42	$			63	$		
43	$			64	$		
44	$			65	$		
44A	$			66	$		
45	$			67	$		
46				68	$		
46A				69	$		
47							
		TOTAL CHARGE: $				TOTAL CHARGE: $	

Charge for roll-off container removal from arterials/designated locations:

Type of Container	Rate Per Removal	Number of Removals	Total Removal Charge
Removal of 13.4 cubic yard roll-off container			

Del Norte Facility

Frequency	Service Areas	Monthly Charge
Daily – Monday through Saturday List dates completed	parking lots, loading docks, truck and trailer staging, scales ingress areas, vehicle traffic asphalt pavement surface areas	

Del Norte Boulevard and Sturgis Road

Frequency	Service Areas	Monthly Charge
Daily – Monday through Saturday List dates completed	Del Norte Boulevard bounded by Fifth Street and Sturgis Road. Sturgis Road bounded by Del Norte Boulevard and Elevar Street	

17.2 Additional Monthly Reports Submitted with Vendor Invoice to City

Missing curb miles:_____

Identify route, location, date, and type of sweeping service:

_____

_____

_____

_____

Circle cause of missed curb miles:
a. Holiday week – specify holiday
b. Hazardous weather and/or conditions – specify date and condition
c. Street sweeping obstruction
d. Down equipment – specify equipment
e. Other: _____

Total monthly debris tonnage delivered by Vendor to Del Norte Regional Recycling & Transfer Station:

_____

Certified payroll reports for all Agreement assigned personnel, upon City's request.

Summary of Daily and Weekly Report Figures for Month:

Resident and business complaints and resolutions:_____
Street sweeping obstruction:_____
Street sweeping route schedule compliance:_____
Routes and curb miles swept:_____

17.3 Daily and Weekly Reports Submitted By Vendor Upon Request from City

a. Daily Reports Submitted to City's Project Manager Are to Contain the Following:

1. Citizen complaints and their resolutions, and follow up with resident/business
2. Hazardous conditions report
3. Street sweeping obstruction report
4. Street sweeping route schedule compliance

b. Weekly Reports submitted to City's Project Manager Are to Contain the Following:

1. Routes swept
2. Curb miles swept
3. Debris collected in tons and cubic yards for all sweeping services provided

18.0 Performance Bond

Within 20 calendar days of the execution of the Agreement, Vendor shall furnish to the City a surety bond executed by a corporate surety or irrevocable letter of credit in the amount of equal to 100% of the annual Agreement amount, in favor of City, in form and substance approved by the Risk Manager of the City of Oxnard, guaranteeing Vendor's faithful performance of the Agreement, which shall remain in force for the term of the Agreement. Any amendment of the Agreement, extension of time, extra work, additional work or other changes may be made without the consent of the surety.

19.0 Staffing

Vendor shall provide personnel specifically trained and experienced in the work to be performed. Street sweeper operators shall have a minimum of three years' experience in municipal street sweeping. All sweeping equipment operators shall possess the type and variety of license required under California law applicable to the gross vehicle weight rating of the equipment. Vendor shall submit a list of sweeper operators to be assigned to the Agreement and include their qualifications and experience. All personnel assigned to the performance of this Agreement shall be employees of Vendor.

20.0 Supervision

Vendor shall have a front-line supervisor on duty at all times any services are being performed under the Agreement. The supervisor shall have the authority to act on behalf of Vendor while making the day-to-day decisions required to effectively and efficiently carry out the obligations of the Agreement and the performance of the work. The supervisor must have a minimum of five years experience in the management of municipal street sweeping contracts of comparable size and scope. The supervisor must be experienced in all phases of street sweeping operations and related services including scheduling, routing, personnel supervision, quality control, direct interface with City staff and residents for customer service request resolution, report writing, enforcement of restricted parking programs, daily communication with the City's Project Manager, Water Resources, Streets & Waterways, Environmental Resources, Code Enforcement and Police Department, ensuring all daily contractual requirements are being satisfied. The supervisor is responsible for inspecting, reporting and recommending to City's Project Manager areas that need sweeping that are not included in regular sweeping service, such as alleyways, emergency sites, and other locations. At the request of the City's Project Manager, Vendor shall provide a qualified representative to attend Neighborhood Council meetings, Homeowner Association meetings, and any and all other meetings as required to facilitate communication about the street sweeping and related services program.

21.0 Communication

Vendor and City's Project Manager shall have direct communication with all sweeping equipment in the field utilizing radios or cell phones. Pagers are not acceptable. The supervisor(s) (see section 20.0) shall have a cellular telephone for direct communication with City's Project Manager, Police Department Parking Enforcement personnel, and residents. In addition, Vendor shall have a toll-free phone line for telephone and fax communication. Vendor shall install Networkfleet 5500 model Global Position System tracking devices on each sweeper assigned to the Agreement so Vendor sweepers can be integrated into City's Geographic Information System; alternatively, Vendor may provide City's Project Manager with unfettered access to existing GPS monitoring software/service used by Vendor by providing a user license and credentials at no cost to the City.

22.0 Complaints

The intent of this Agreement is to provide the highest level of street sweeping and related services available within the City. Complaints and inquiries from residential and business property owners in the City are of paramount importance. The City's Project Manager will communicate all customer service requests to Vendor. Vendor shall respond to all inquiries and complaints on the same day they are received. It is Vendor's responsibility to communicate directly with the City's Project Manager. Vendor shall follow up with customers and City's Project Manager with the resolution of any and all inquiries and complaints. Upon City's Project Manager request, Vendor shall provide a written report for each customer service request/complaint, as provided in section 17.0-17.3. This Agreement is intended to mitigate complaints from City residents and businesses for Vendor's failure to perform under the terms of this Agreement. Therefore, Vendor shall be subject to a penalty of $100.00 per day for each day that a complaint caused by Vendor's operations goes unresolved to the satisfaction of the City's Project Manager. In addition, should City receive complaints for service below the standards as outlined in the Agreement specifications in excess of three per thirty-day period, City reserves the right to terminate the Agreement.

23.0 Damages

All damages incurred by the Vendor on their own equipment, or damage caused by the contractor to private property, City property, or public right-of-way shall be reported in writing to the City's Project Manager within 24 hours of the incident. It is the sole responsibility of the Vendor to repair any damage it causes. The City shall refer complaints regarding damage to private property caused by the Vendor, to the Vendor for resolution. Failure to notify the City within 24 hours of any incident is subject to cancellation of this Agreement.

SCOPE OF SERVICES EXHIBIT ATTACHMENT NO. 1

STREET SWEEPING

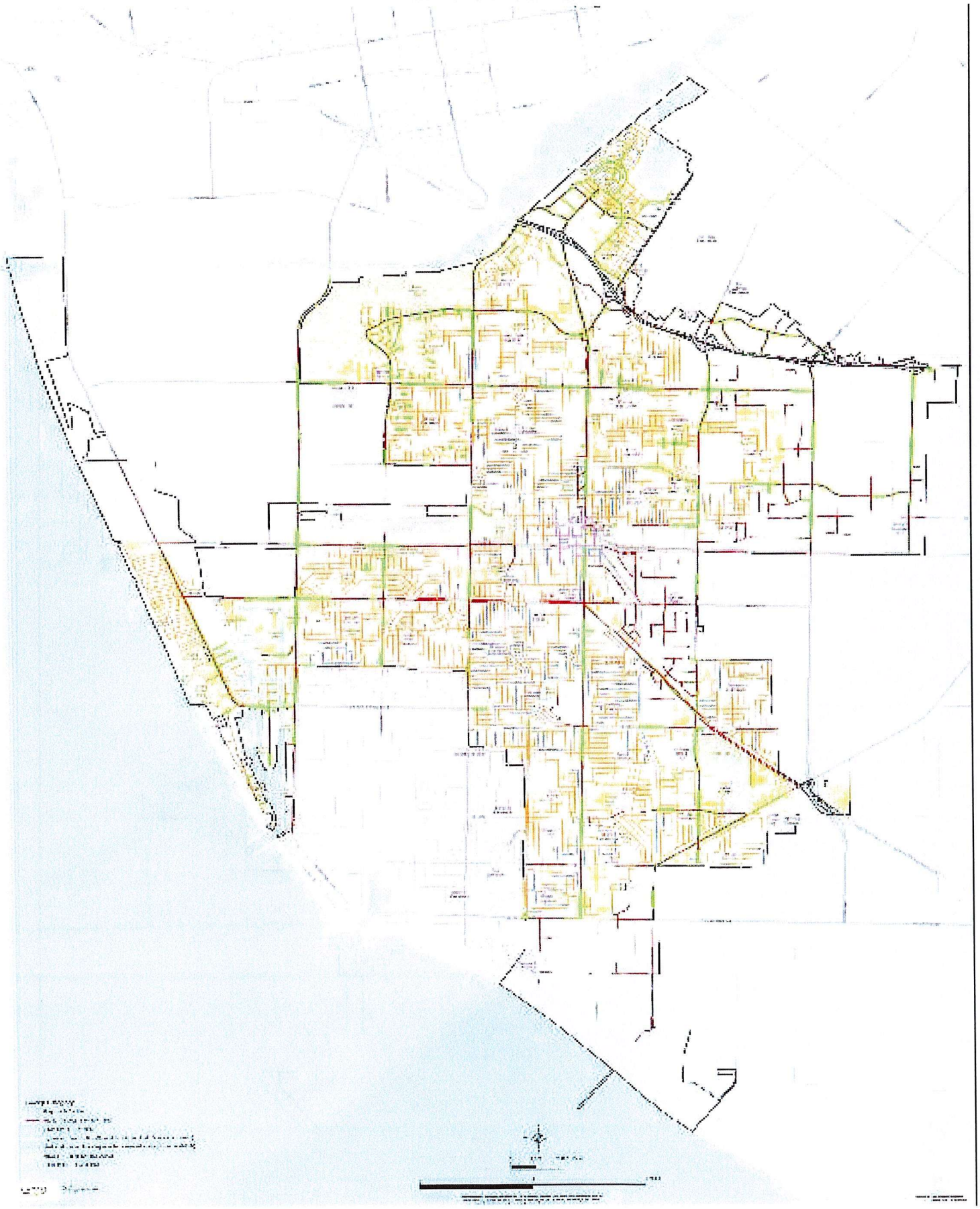

SCOPE OF SERVICES EXHIBIT ATTACHMENT NO. 2

STREET SWEEPING

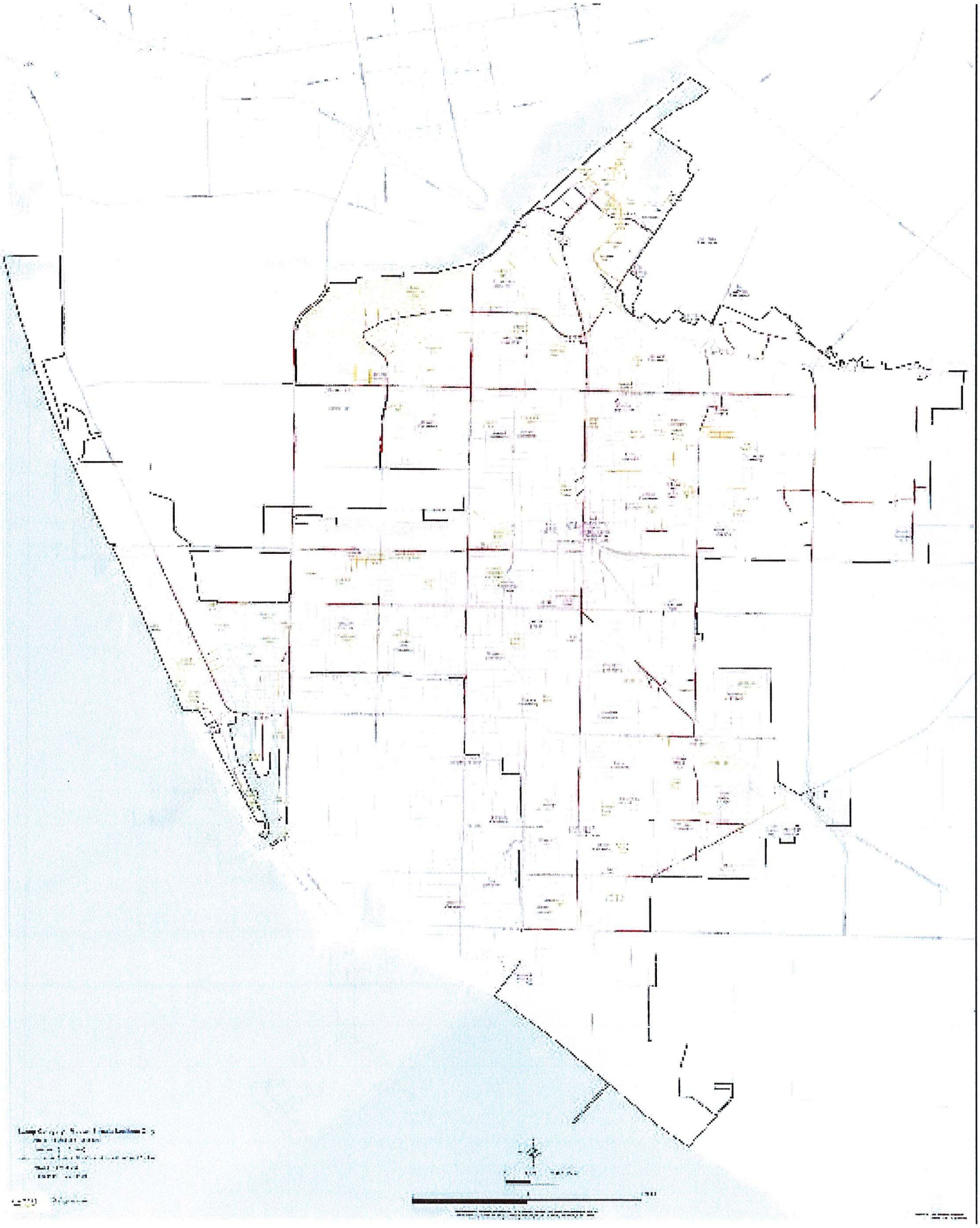

SCOPE OF SERVICES EXHIBIT ATTACHMENT NO. 3

PARKING LOT INDEX

PAGE	PARKING LOT NUMBER
25	1, 2
26	4, 5
27	6, 7
28	8
29	9, 10, 11, 12, 13, 14
30	15, 16
31	17
32	18
33	19, 20, 21
34	22, 23
35	24, 25, 26, 27, 28, 29, 30, 31, 32, 33, 34, 35
36	36, 37, 38, 39, 40, 67
37	41, 42, 43, 44, 44A, 45, 46, 47
38	48
39	49
40	50
41	51
42	56
43	58, 59, 60, 61, 62
44	63
45	64 "Downtown Parking Structure"
46	65, 66
47	68
48	69

SCOPE OF SERVICES EXHIBIT ATTACHMENT NO. 3

PARKING LOT DESCRIPTIONS

Parking Lot No.	Location	Site Description
1	NE Corner of Pacific Ave and E Wooley Rd	City Equipment Yard
2	Pacific Ave and E Wooley Road, through North Gate	City Equipment Yard
3	NOT APPLICABLE	
4	Between 630 and 650 S A Street	Public Parking Lot Between Church and Billiards
5	Between 613 and 637 S Oxnard Blvd	Public Parking Lot Between Dance Studio and Restaurant
6	NE Corner of N C Street and Palm Drive	Wilson Senior Center
7	SE Corner of N C Street and alleyway	Wilson Senior Center
8	Del Sol Park/Oxnard Housing Authority	Multi Service Center
9	S G Street Between W 7th Street and W 9th Street	Community Center Park Street Side Parking
10	W 9th Street Between Hobson Way & S G Street	Oxnard Performing Arts Center South Parking Lot
11	SE Corner of Hobson Way and W 7th Street	Oxnard Performing Arts Center North Parking Lot
12	W 7th Street	Oxnard Performing Arts Center North East Parking Lot Next to Lot #11
13	SW Corner of Hobson Way and W 7th Street	Baseball Field Parking Lot
14	NW Corner of Hobson Way and W 9th Street	Tennis Courts Parking Lot
15	Hill Street and alleyway Between Baseball Field and Basketball Court	Durley Park West Parking Lot
16	SW Corner of S G Street and Hill Street	Durley Park NE Parking Lot
17[1]	Corner of Sunset Lane and Mandalay Beach Road	Oxnard State Beach Parking Lot
18[1]	Falkirk Avenue Parallel to Harbor Blvd	Oxnard Beach Park North and South Parking Lots
19	S Oxnard Blvd Between 3rd Street and W 4th Street	South of Firestone Mechanic Shop
20	S Oxnard Blvd Between 3rd Street and W 4th Street	South of Lot # 18
21	NW Corner of S Oxnard Blvd and E 4th Street	Next to Restaurant
22	Between 512 and 532 S Oxnard Blvd	Public Parking Lot Between Restaurant and Pawn Shop
23	Between 626 and 660 S Oxnard Blvd	Public Parking Lots Between Theater and Market
24	NW Corner of S Oxnard Blvd and E 6th Street	Public Parking Lot Next to Insurance Business
25	541 Pacific Coast Highway	Public Parking Lot North of Beauty Salon

[1] Sandy conditions expected due to close proximity of beach

26	W 5th Street and S Oxnard Blvd	Behind Insurance & Clothing Businesses, North of Lot #25
27	W 5th Street and S Oxnard Blvd	Drug Store Parking Lot (side and back)
28	479 Pacific Coast Highway, SW Corner of S Oxnard Blvd and E 4th Street	Public Parking Lot North of Lot # 27
29	NE Corner of S B Street and W 6th Street	Public Parking Lot Next to Beauty Salon
30	NE Corner of S B Street and W 6th Street	Adjoined to Lot # 29
31	S B Street, W 5th Street, S A Street	Centennial Plaza Street Side Parking
32	Between 305 and 321 W 6th Street	Public Parking Lot Next to Restaurant/Beauty Salon Building
33	Between 338 and 320 W 5th Street	Public Parking Lot Adjoined to Lot #32 on North Side
34	405 S B Street	Public Parking Lots North & South of Carnegie Art Museum, Between S B Street and S C Street
35	Between 426 W 5th Street and 509 S C Street	Public Parking Lot Behind Restaurant
36	Between 310 and 326 S C Street	Public Parking Lot Between Bakery and Market
37	North of 343 S B Street	Public Parking Lot North of Insurance Business
38	South of 300 W 3rd Street Building	Public Parking Lot Adjoined to Lot # 37
39	W 4th Street Between S B Street and alleyway	Public Parking Structure Bus Stop Zone Along 4th Street
40	S B Street Between W 3rd Street and W 4th Street	Public Parking Structure Street Side Parking Along B Street
41	NW Corner of S C Street and W 3rd Street	Police Department Public Parking Lot
42	S D Street Between W 2nd Street and W 3rd Street	Police Department Gated Parking Lot
43	SW Corner of S C Street and W 2nd Street	Police Department Gated Parking Lot, NE Quadrant Adjoined to Lot # 42
44	W 2nd Street Between S C Street and S A Street	Service Center/Fire Administration Parking Lot
44A	W 2nd Street Between S C Street and S A Street	Downtown Main Library Parking Lot Adjoined to Lot #44
45	NW Corner of S B Street and W 2nd Street	Public Parking Lot Next to Tax Business
46	241 W 2nd Street	Parking Lot Behind Vacant City Building
46A	136 S B Street	North of Lot # 46
47	S C Street Between W 2nd Street and W 3rd Street	Service Center Street Side Parking
48[1]	Arnold Road South of Perimeter Road	Ormond Beach Parking Lot
49[1]	South End of Perkins Road	Ormond Beach Parking Lot
50	200 E Bard Road	South Oxnard Center Parking Lot (Senior Center/Branch Library)
51[1]	S Victoria Avenue Between	Kiddie Beach Park Public

[1] Sandy conditions expected due to close proximity of beach

	Sunset Drive and San Nicolas Avenue	Parking Lot
52	NOT APPLICABLE	
53	NOT APPLICABLE	
54	NOT APPLICABLE	
55	NOT APPLICABLE	
56[1]	3333 Peninsula Road	Peninsula Park Public Parking Lot
58[1]	Cabezone Circle Off Harbor Boulevard	Marine Emporium Landing Public Parking Lot
59[1]	Between Cabezone Circle and Barracuda Way	Channel Islands Marina Public Parking Lot
60[1]	Between Barracuda Way and Bluefin Circle	Channel Islands Boating Center Public Parking Lot
61[1]	Bluefin Circle Off Harbor Boulevard	Channel Islands Maritime Museum Public Parking Lot
62[1]	Between Bluefin Circle and Albacore Way	Channel Islands Yacht Club Public Parking Lot
63[1]	Corner of Harbor Boulevard and Ocean Drive	Channel View Park Public Parking Lot
64	SE Corner of West 3rd Street and S B Street	Public Parking Structure Across Oxnard City Hall
65	201 E 4th Street	Oxnard Transportation Center
66	251 S Hayes Avenue	City of Oxnard Water Division – North and South Yard
67	SE Corner of S D Street and W 3rd Street	East of Santa Clara Elementary School
68	SW Corner of Del Norte Boulevard and Sturgis Road	Del Norte Regional Recycling and Transfer Station
69	6001 Perkins Road	Wastewater Treatment Plant

[1] Sandy conditions expected due to close proximity of beach

SCOPE OF SERVICES EXHIBIT ATTACHMENT NO. 3

PARKING LOTS 1 & 2

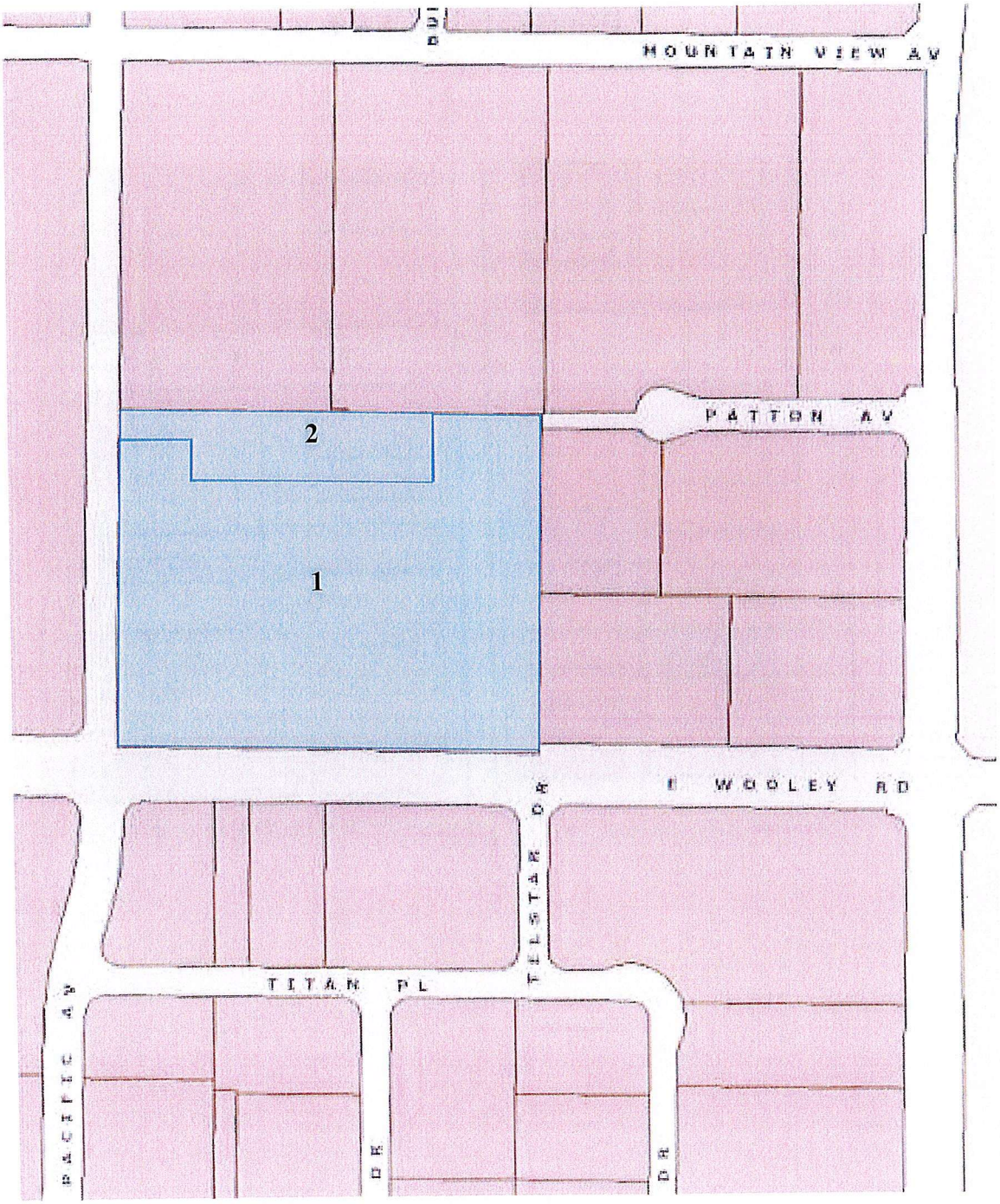

SCOPE OF SERVICES EXHIBIT ATTACHMENT NO. 3

PARKING LOTS 4 & 5

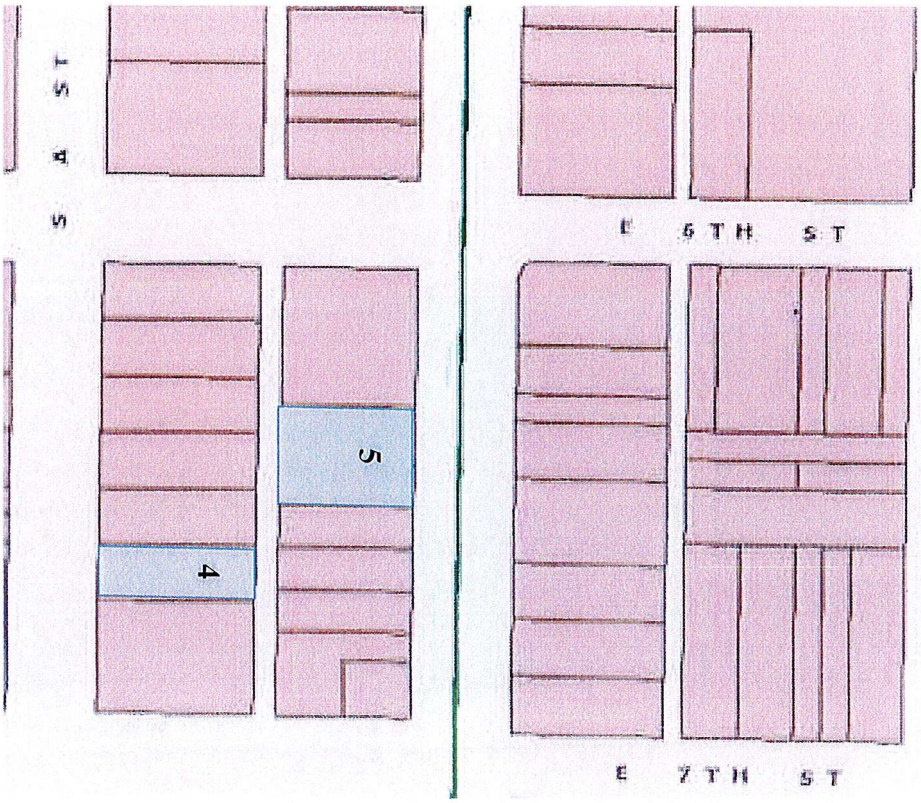

SCOPE OF SERVICES EXHIBIT ATTACHMENT NO. 3

PARKING LOTS 6 & 7

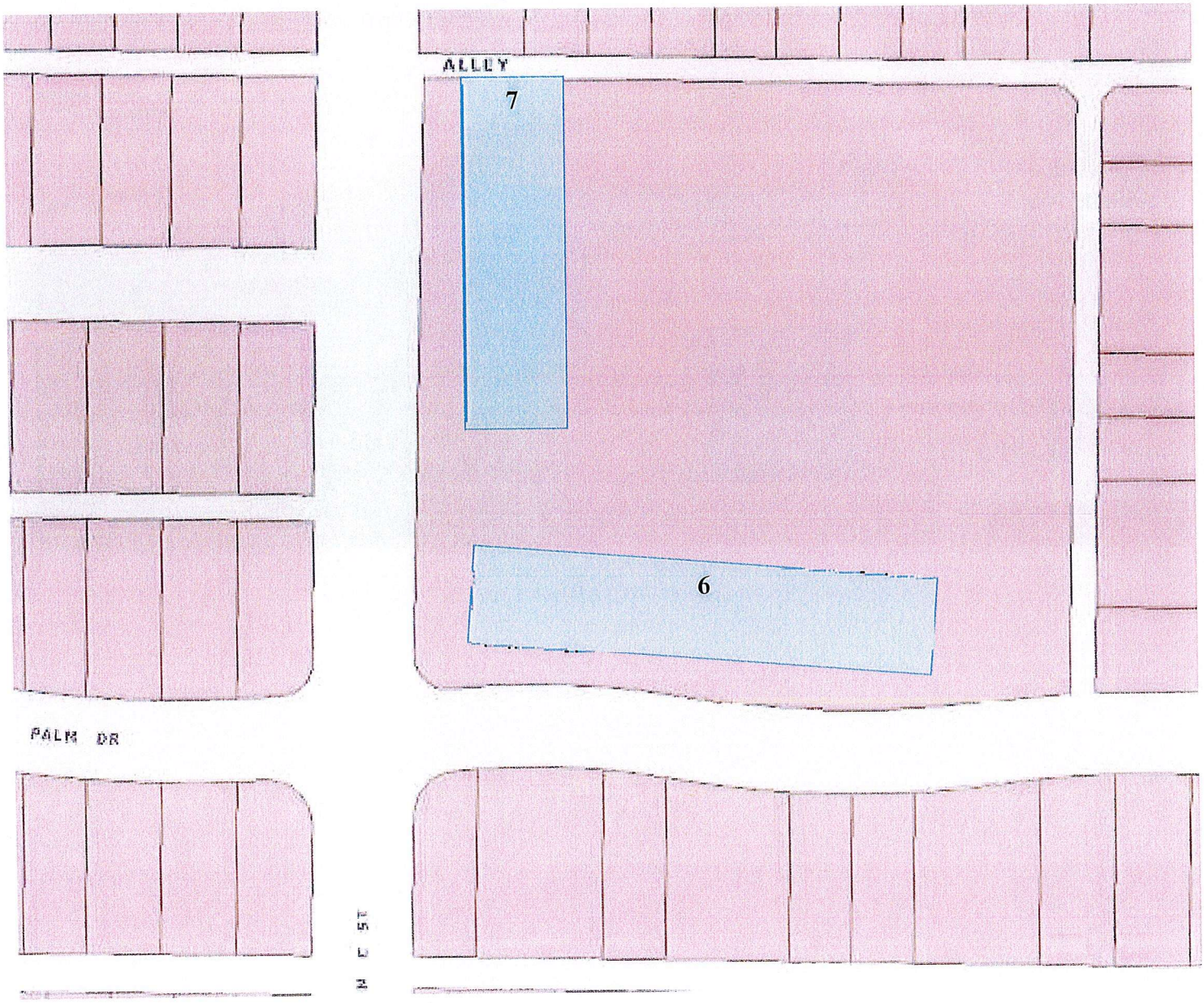

SCOPE OF SERVICES EXHIBIT ATTACHMENT NO. 3

PARKING LOT 8

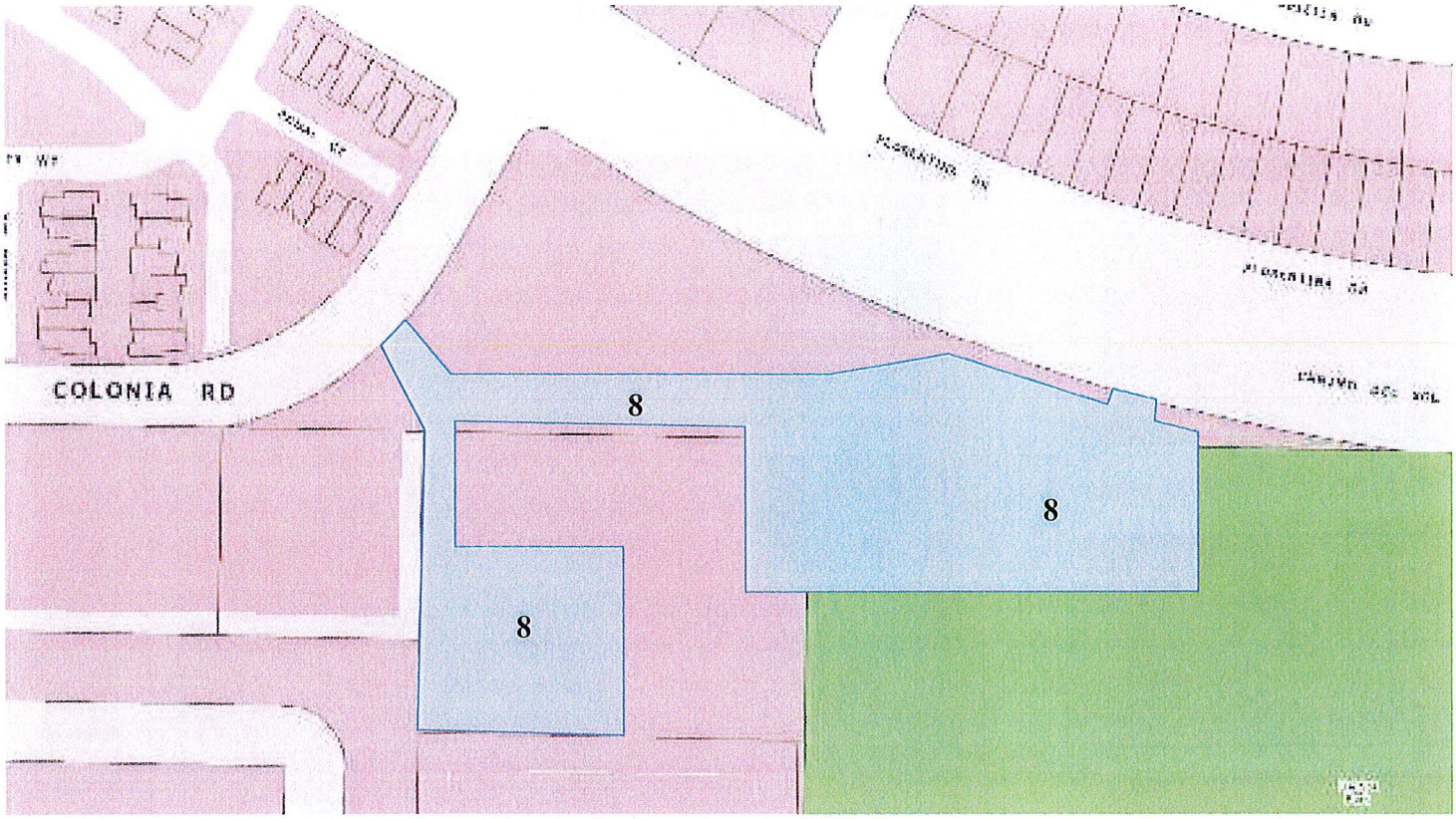

SCOPE OF SERVICES EXHIBIT ATTACHMENT NO. 3

PARKING LOTS 9, 10, 11, 12, 13, & 14

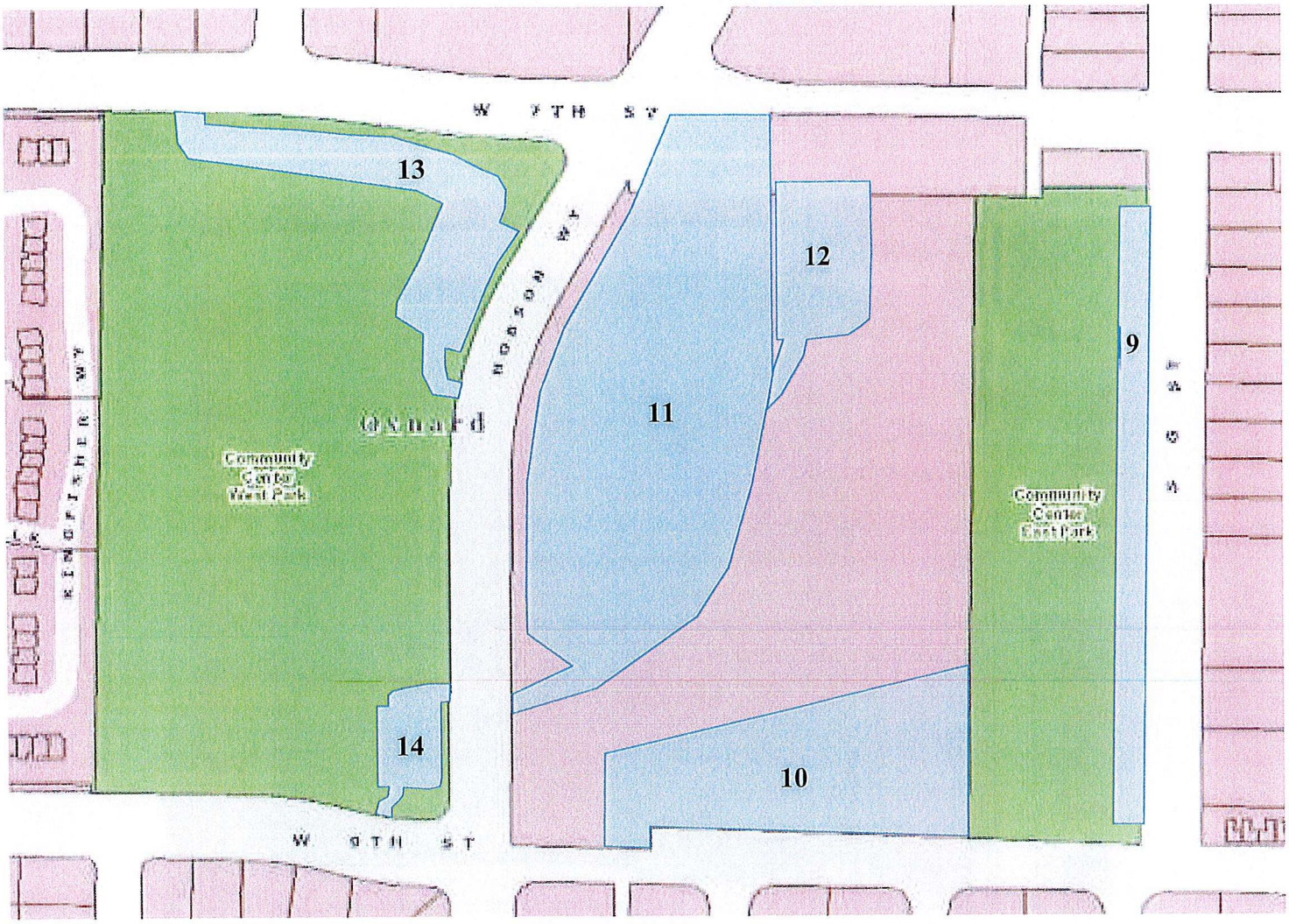

SCOPE OF SERVICES EXHIBIT ATTACHMENT NO. 3

PARKING LOTS 15 & 16

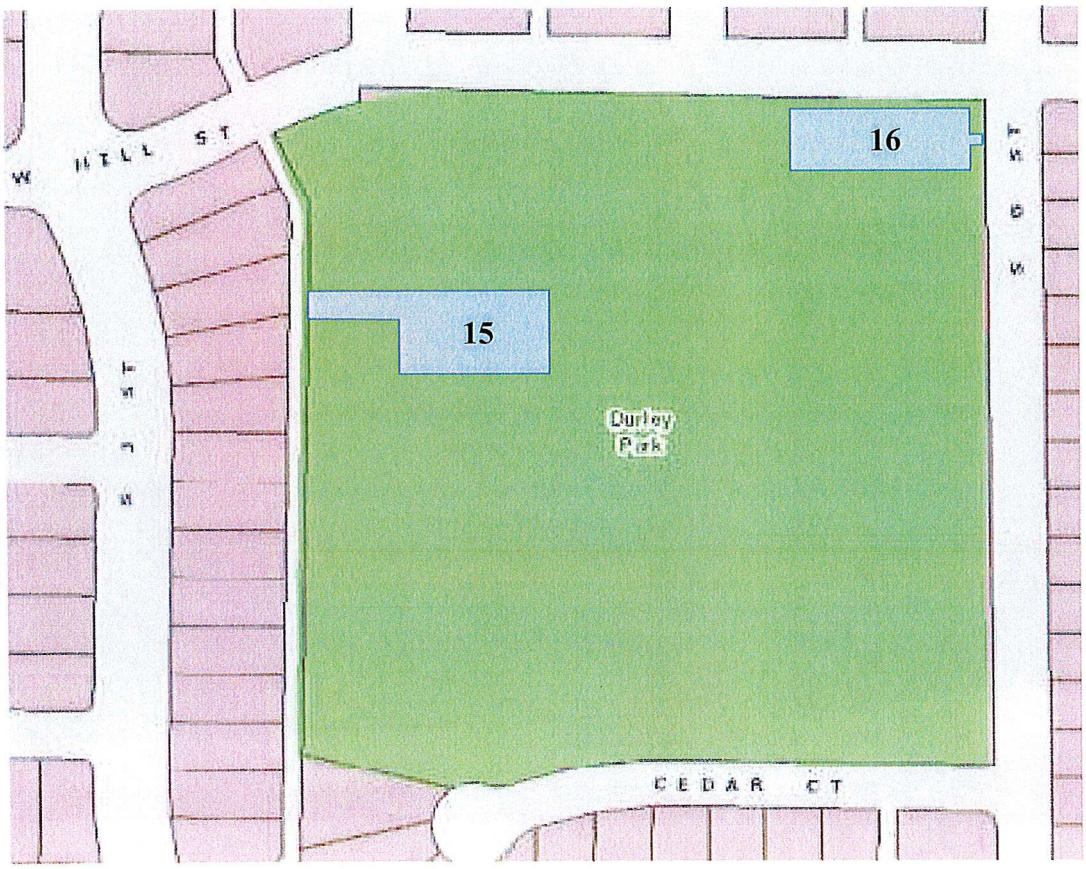

SCOPE OF SERVICES EXHIBIT ATTACHMENT NO. 3

PARKING LOT 17

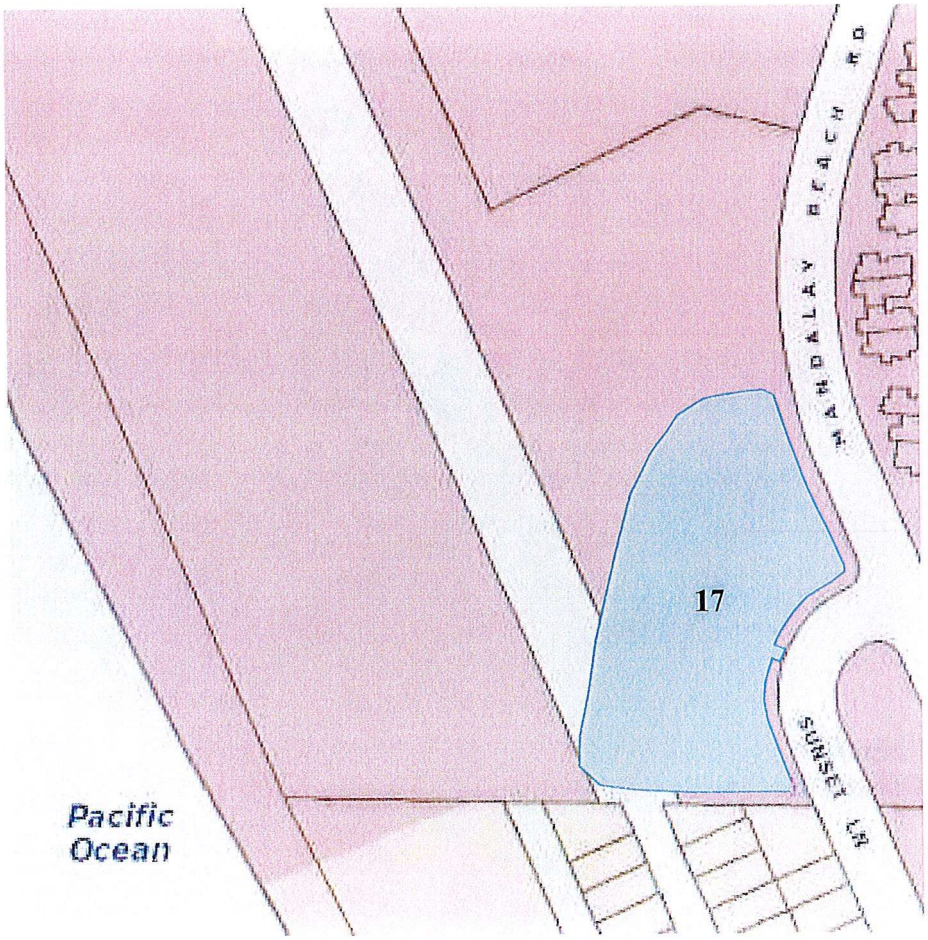

SCOPE OF SERVICES EXHIBIT ATTACHMENT NO. 3

PARKING LOT 18

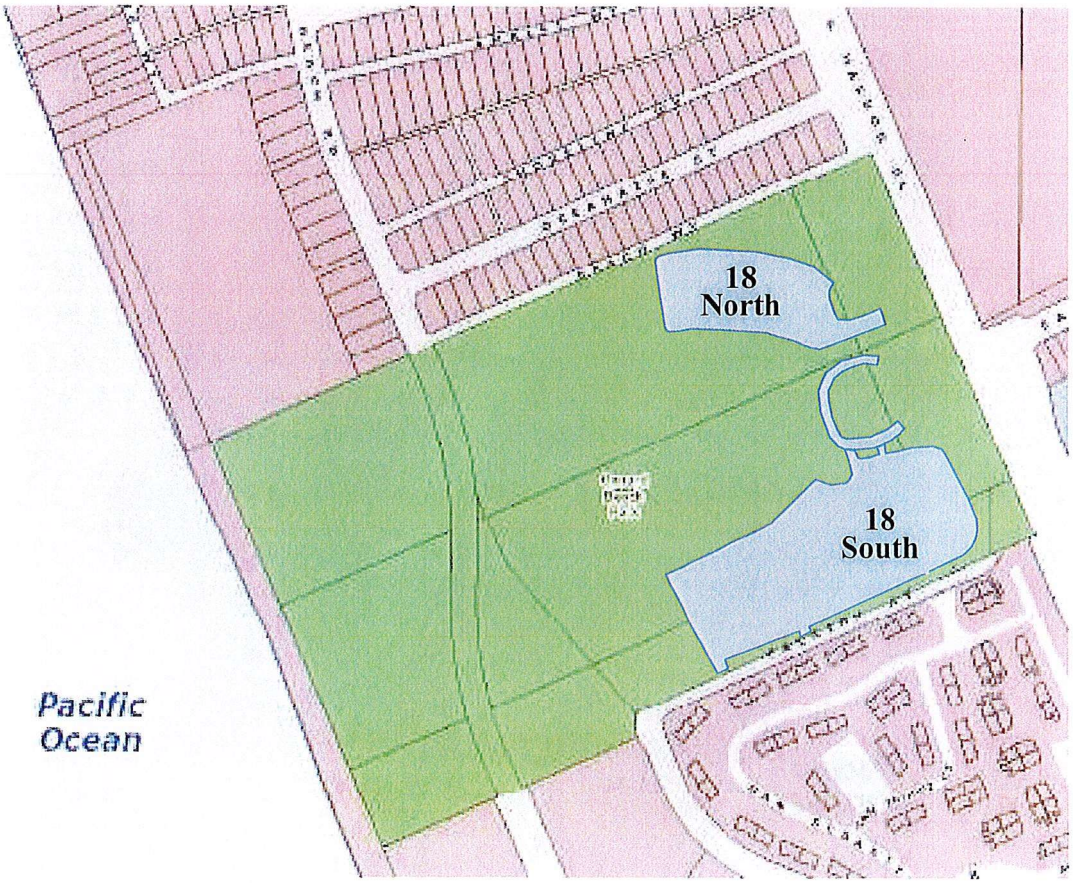

SCOPE OF SERVICES EXHIBIT ATTACHMENT NO. 3

PARKING LOTS 19, 20, & 21

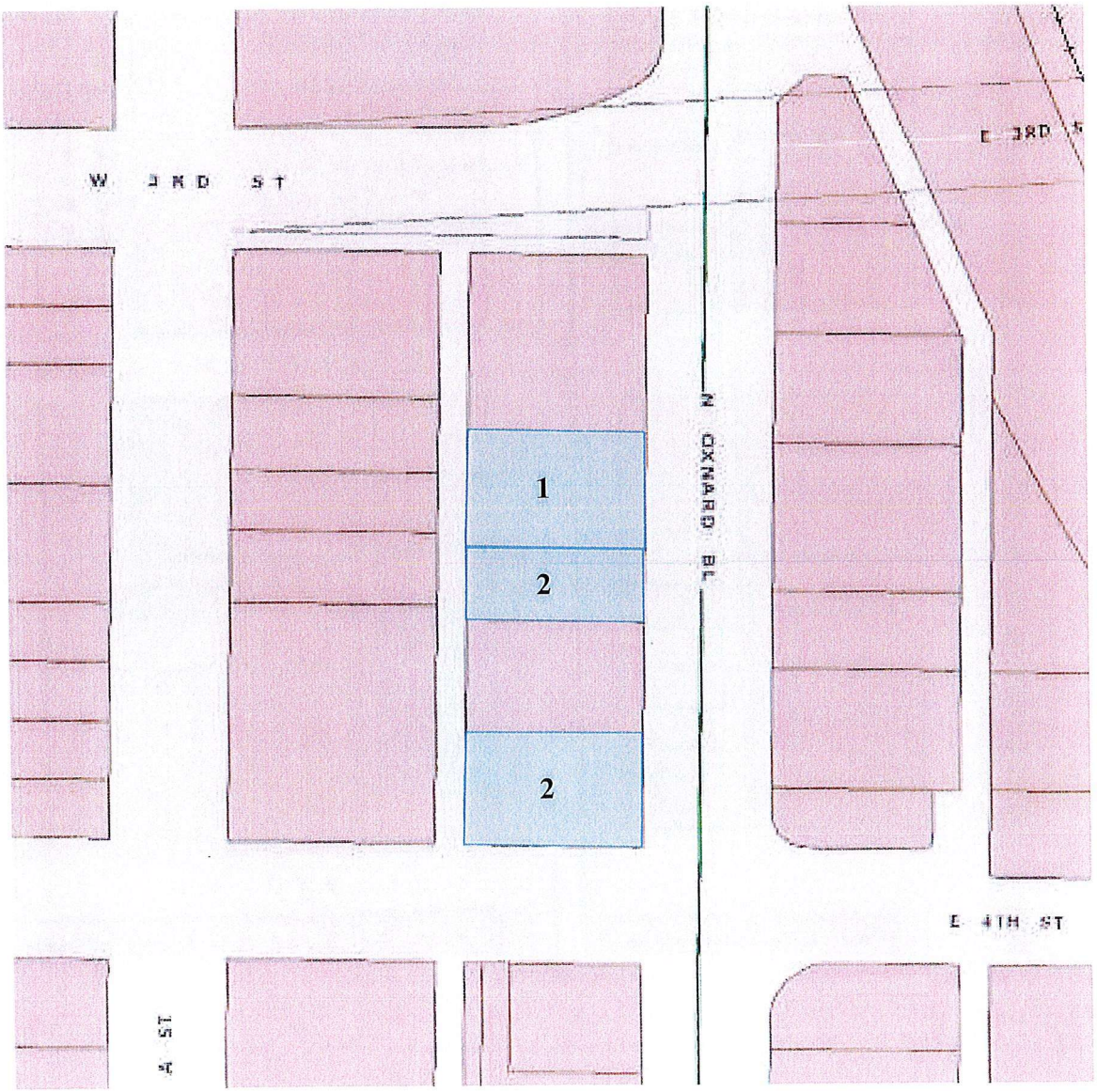

SCOPE OF SERVICES EXHIBIT ATTACHMENT NO. 3

PARKING LOTS 22 & 23

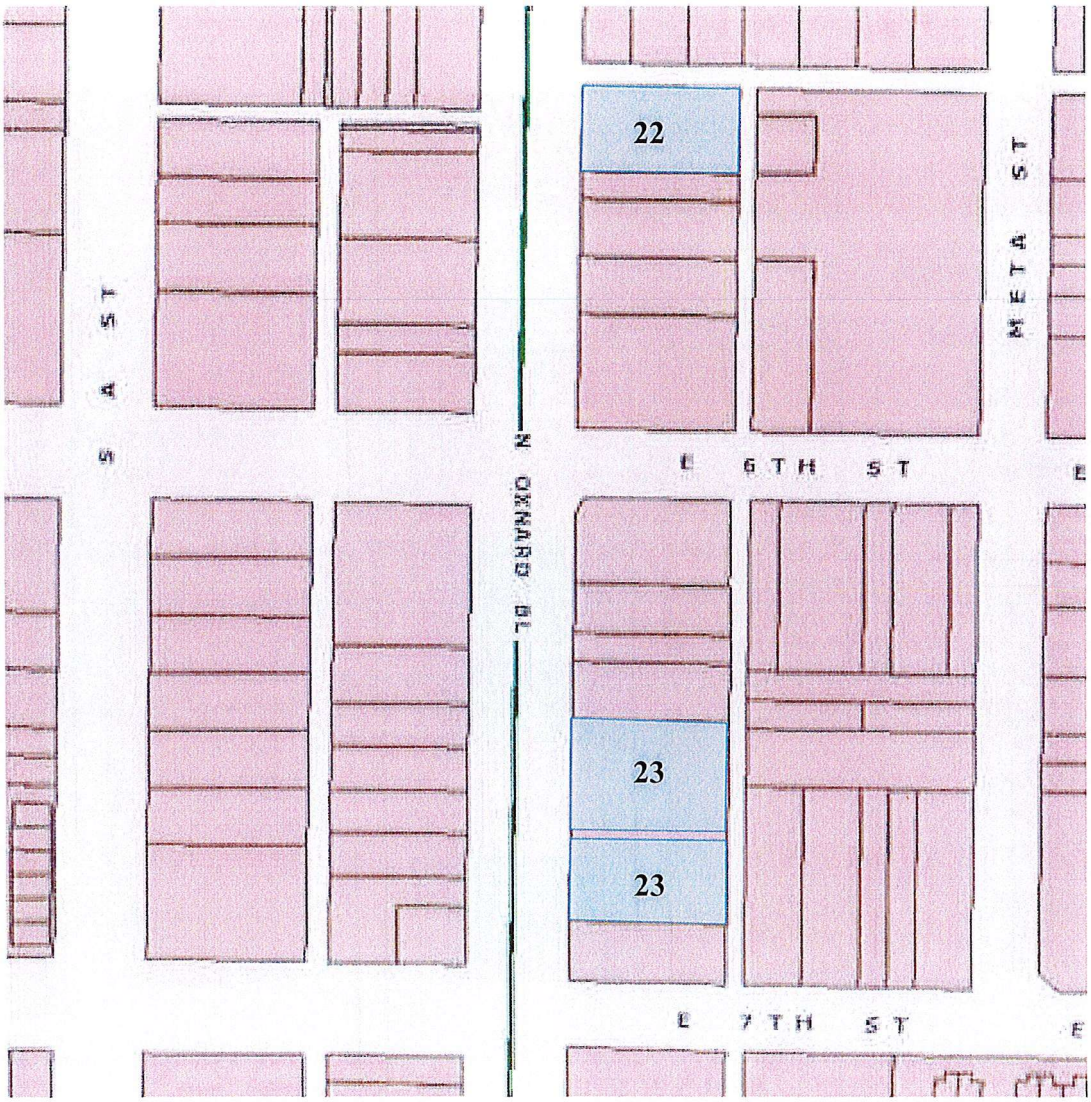

SCOPE OF SERVICES EXHIBIT ATTACHMENT NO. 3

PARKING LOTS 24, 25, 26, 27, 28, 29, 30, 31, 32, 33, 34, & 35

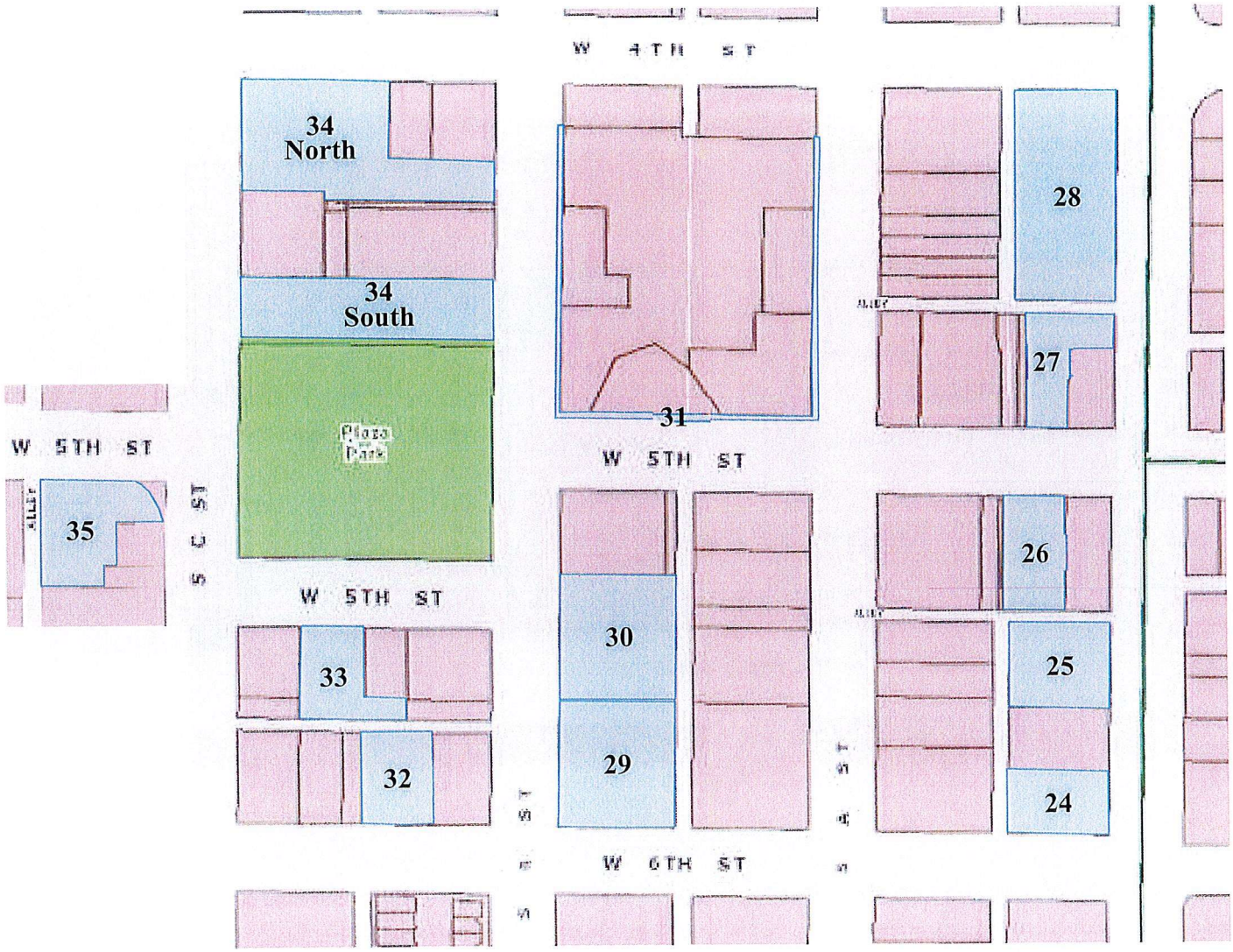

SCOPE OF SERVICES EXHIBIT ATTACHMENT NO. 3

PARKING LOTS 36, 37, 38, 39, 40, & 67

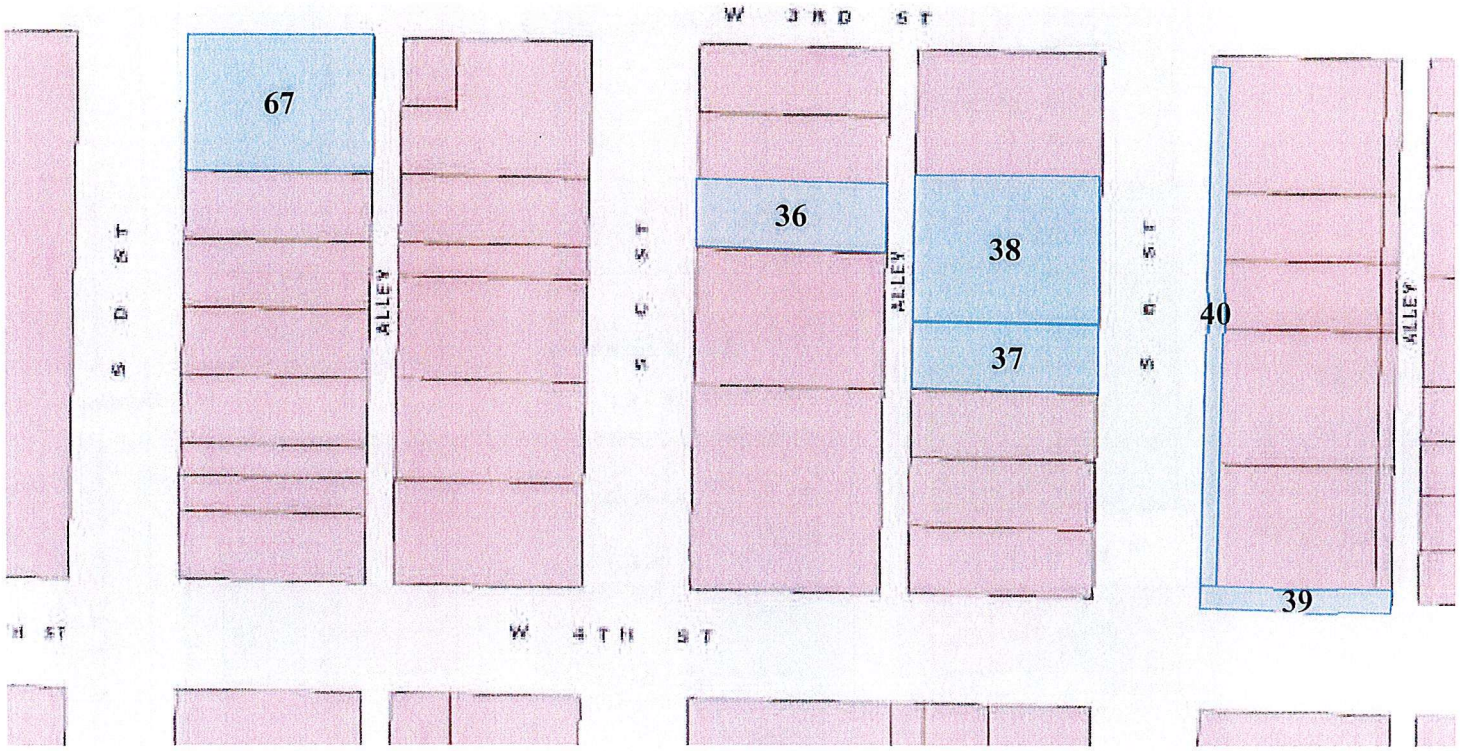

SCOPE OF SERVICES EXHIBIT ATTACHMENT NO. 3

PARKING LOTS 41, 42, 43, 44, 44A, 45, 46, & 47

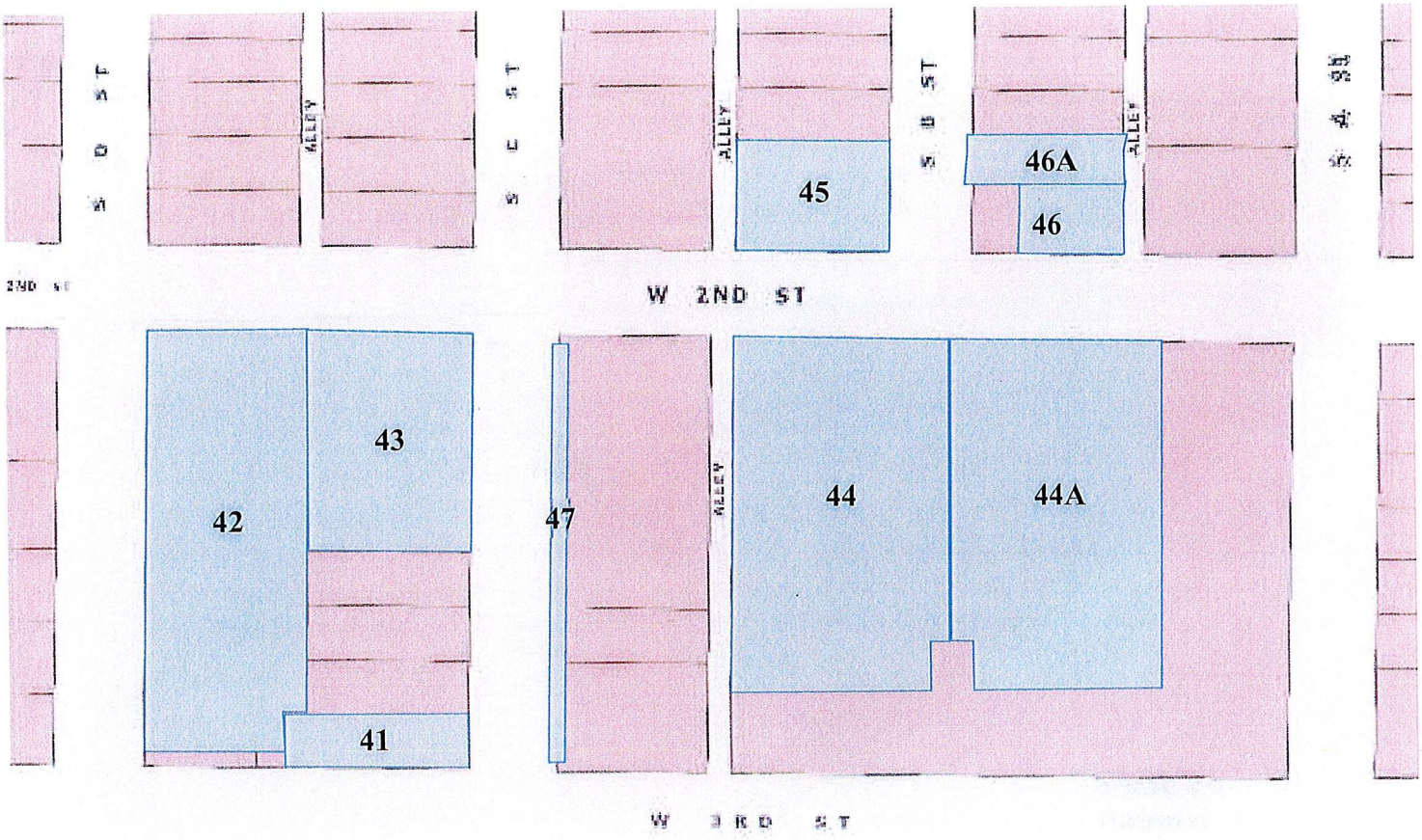

SCOPE OF SERVICES EXHIBIT ATTACHMENT NO. 3

PARKING LOT 48

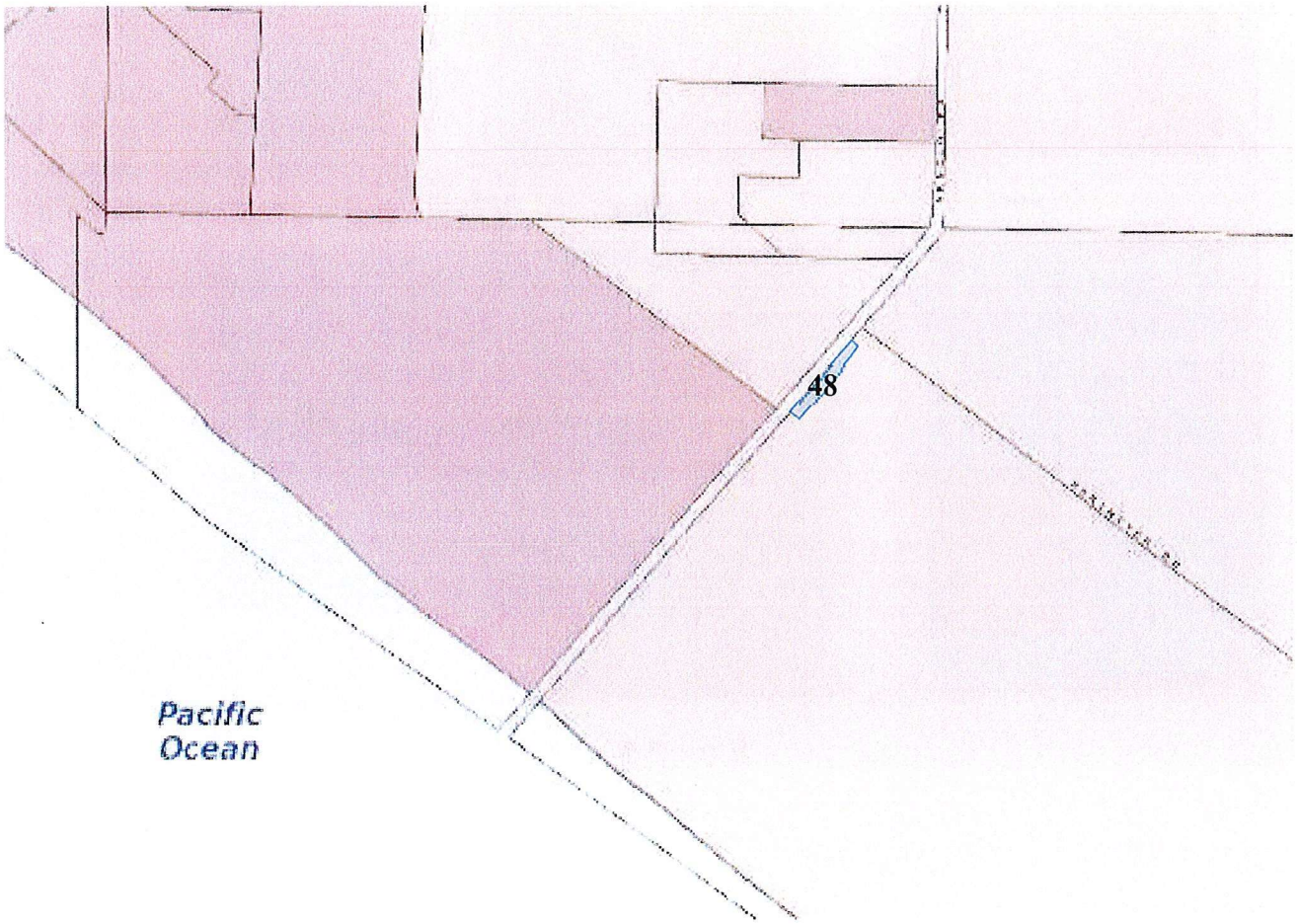

SCOPE OF SERVICES EXHIBIT ATTACHMENT NO. 3

PARKING LOT 49

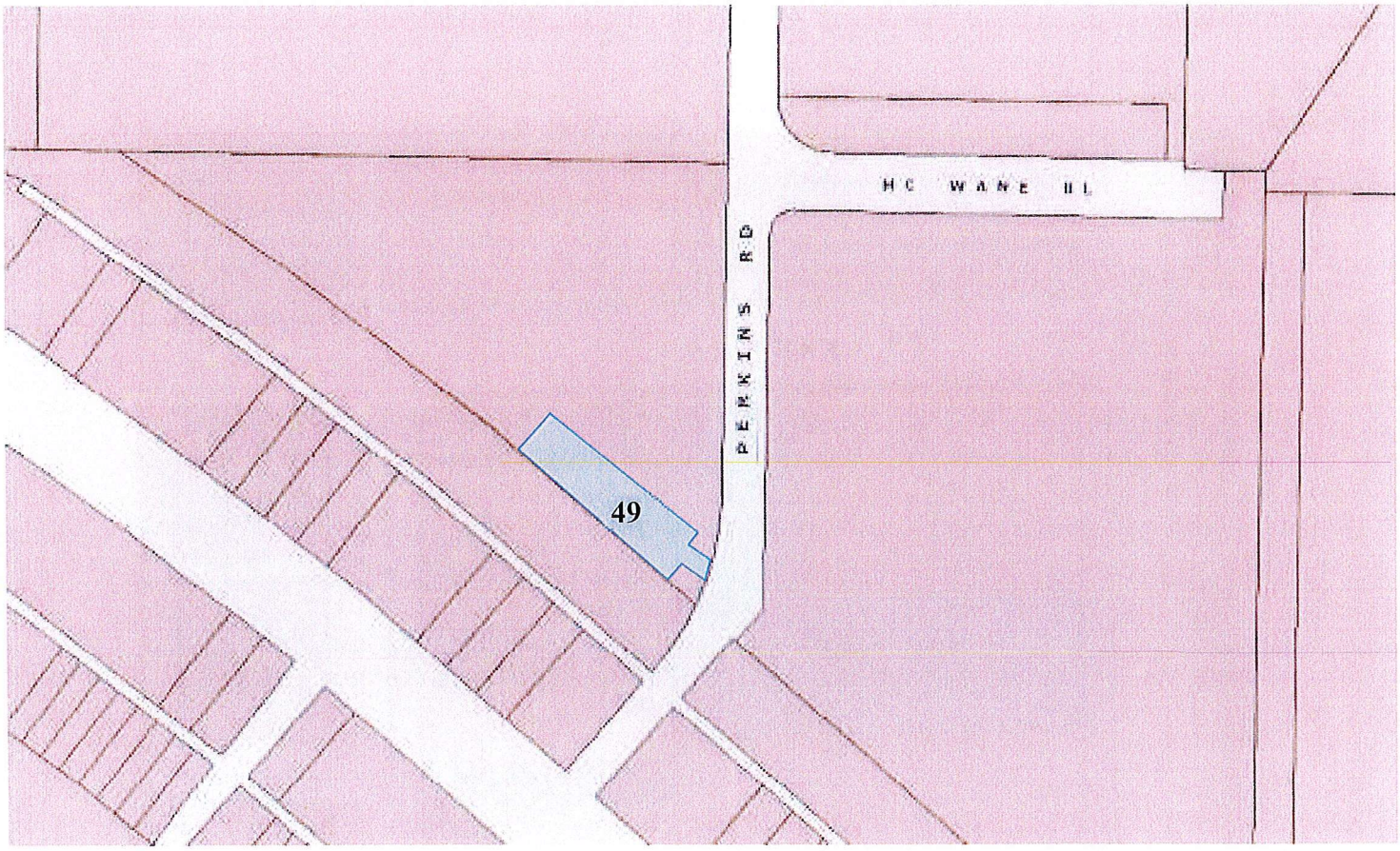

SCOPE OF SERVICES EXHIBIT ATTACHMENT NO. 3

PARKING LOT 50

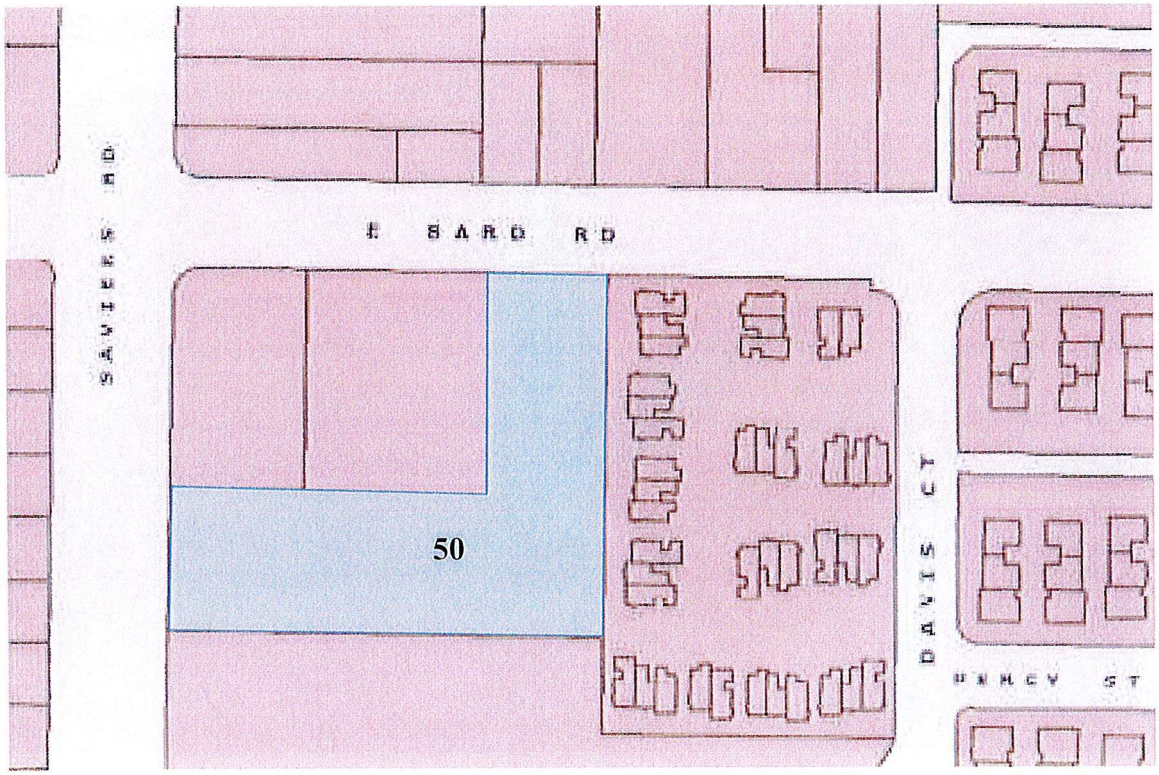

SCOPE OF SERVICES EXHIBIT ATTACHMENT NO. 3

PARKING LOT 51

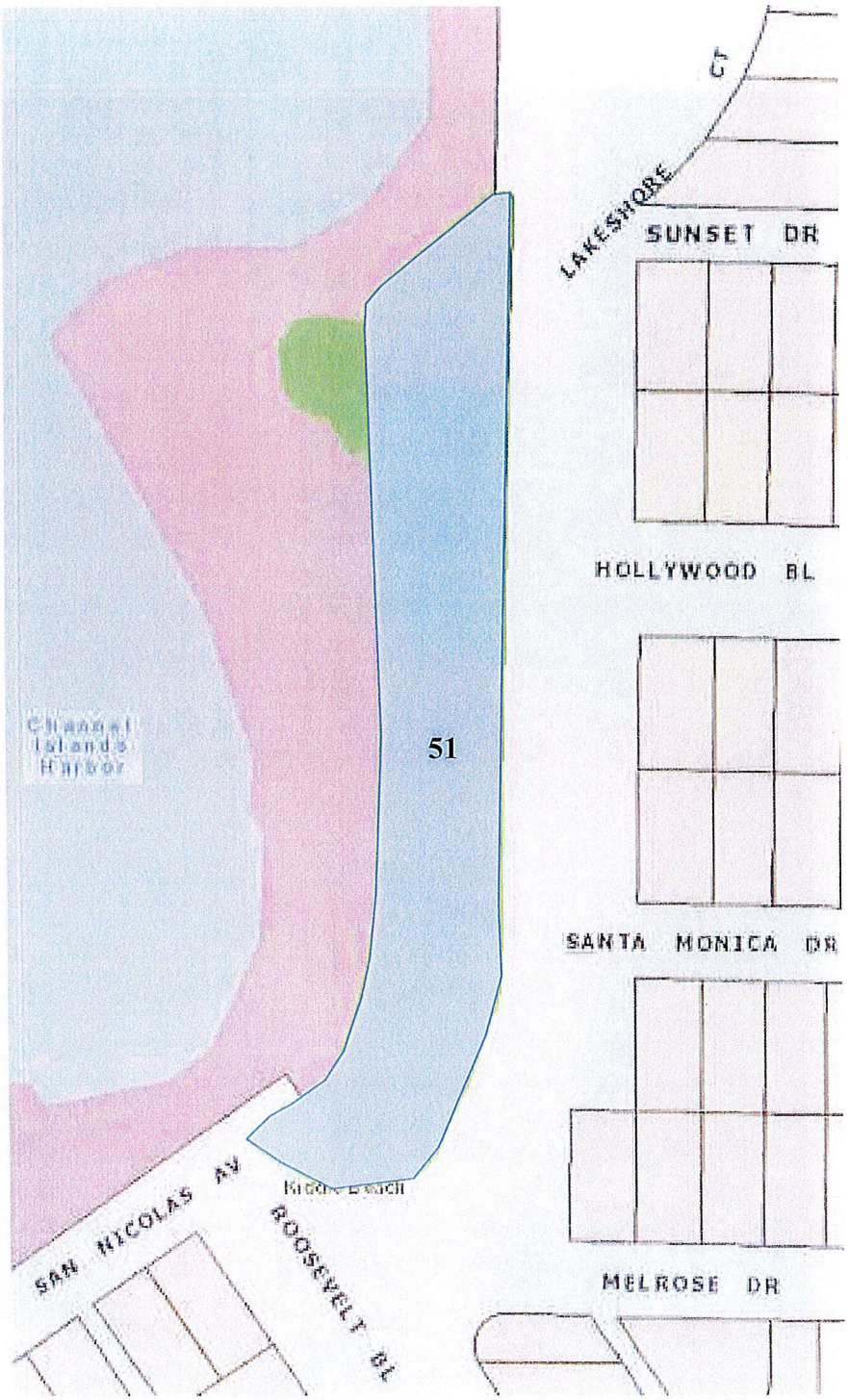

SCOPE OF SERVICES EXHIBIT ATTACHMENT NO. 3

PARKING LOT 56

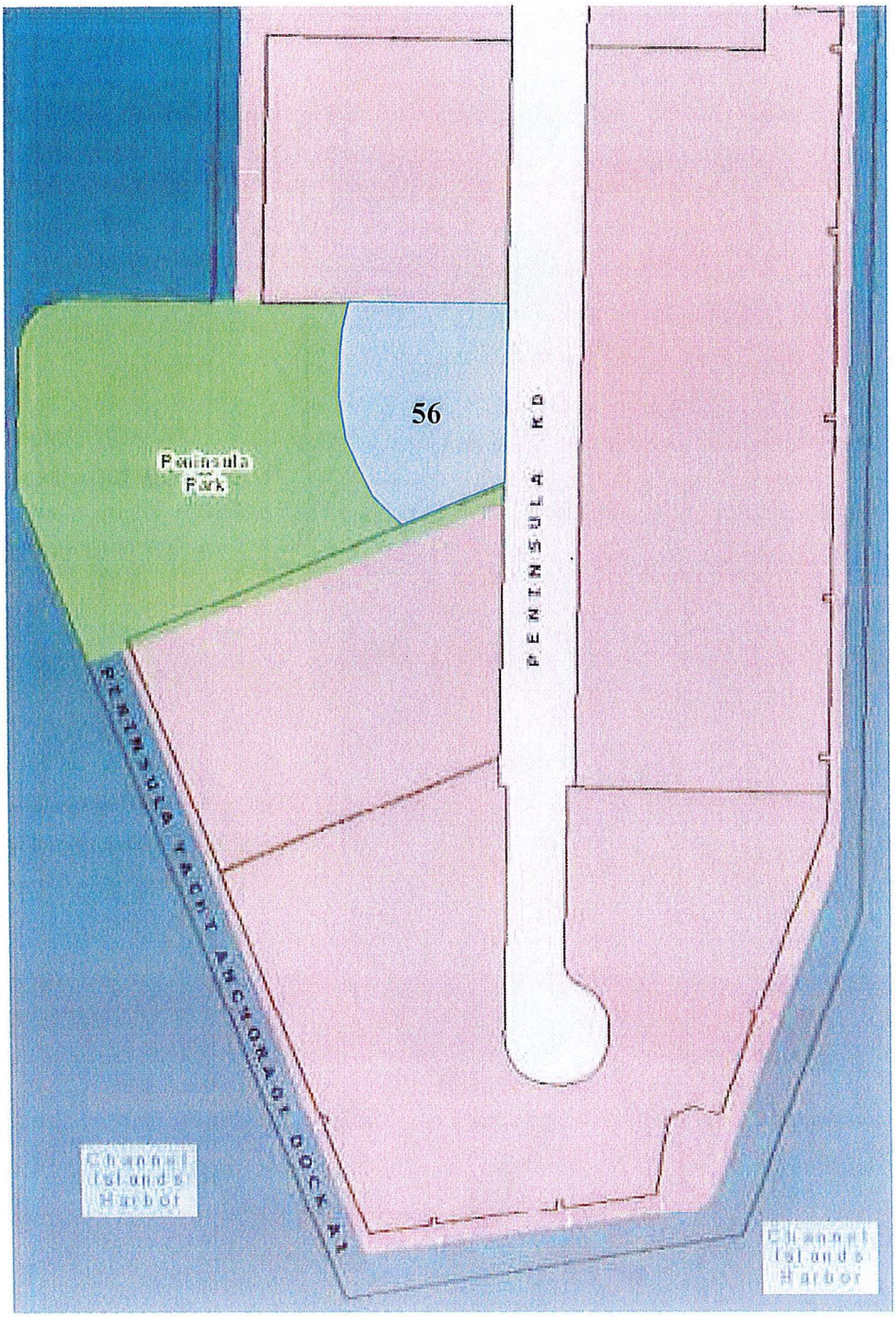

SCOPE OF SERVICES EXHIBIT ATTACHMENT NO. 3

PARKING LOTS 58, 59, 60, 61, & 62

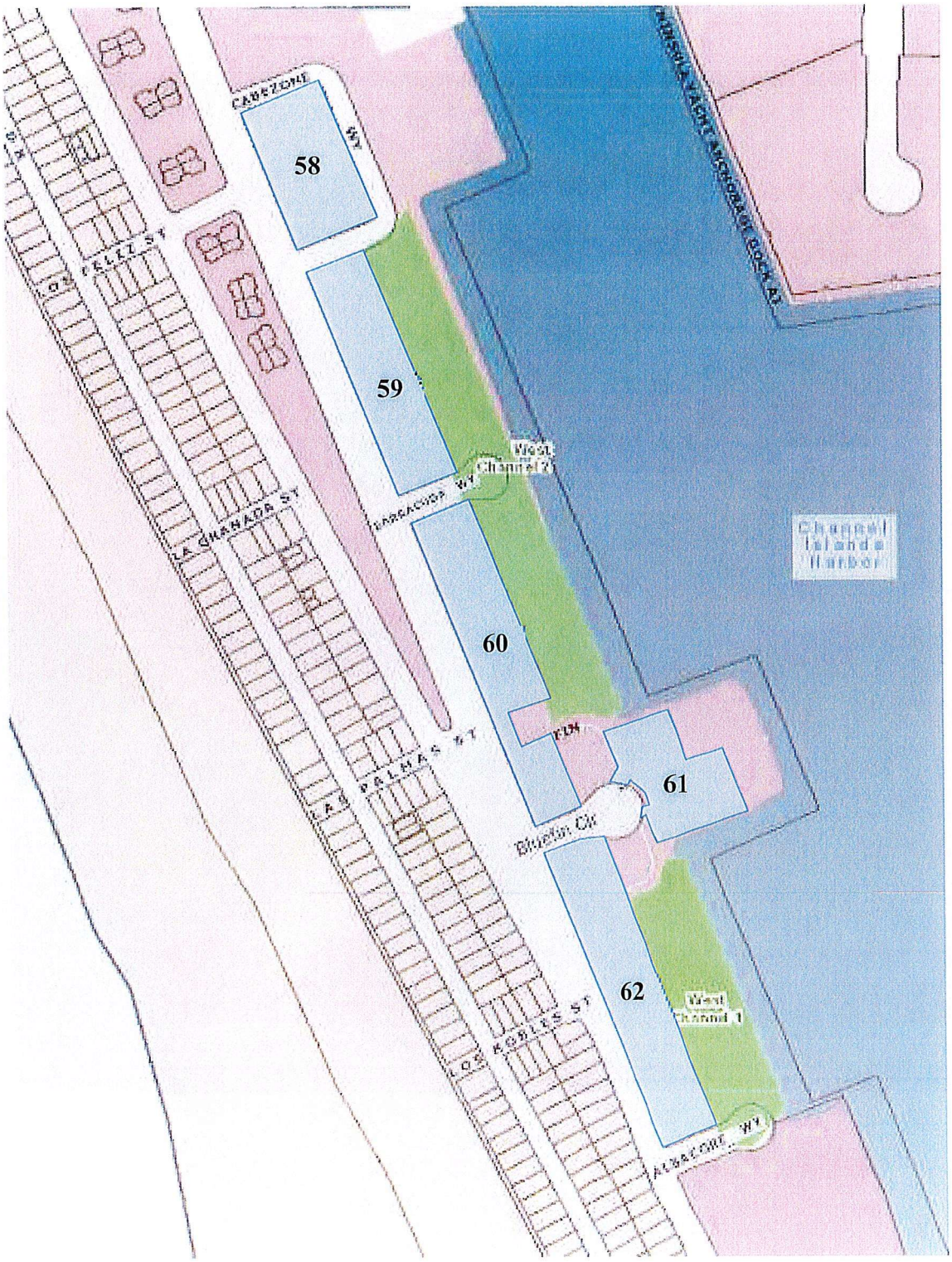

SCOPE OF SERVICES EXHIBIT ATTACHMENT NO. 3

PARKING LOTS 63

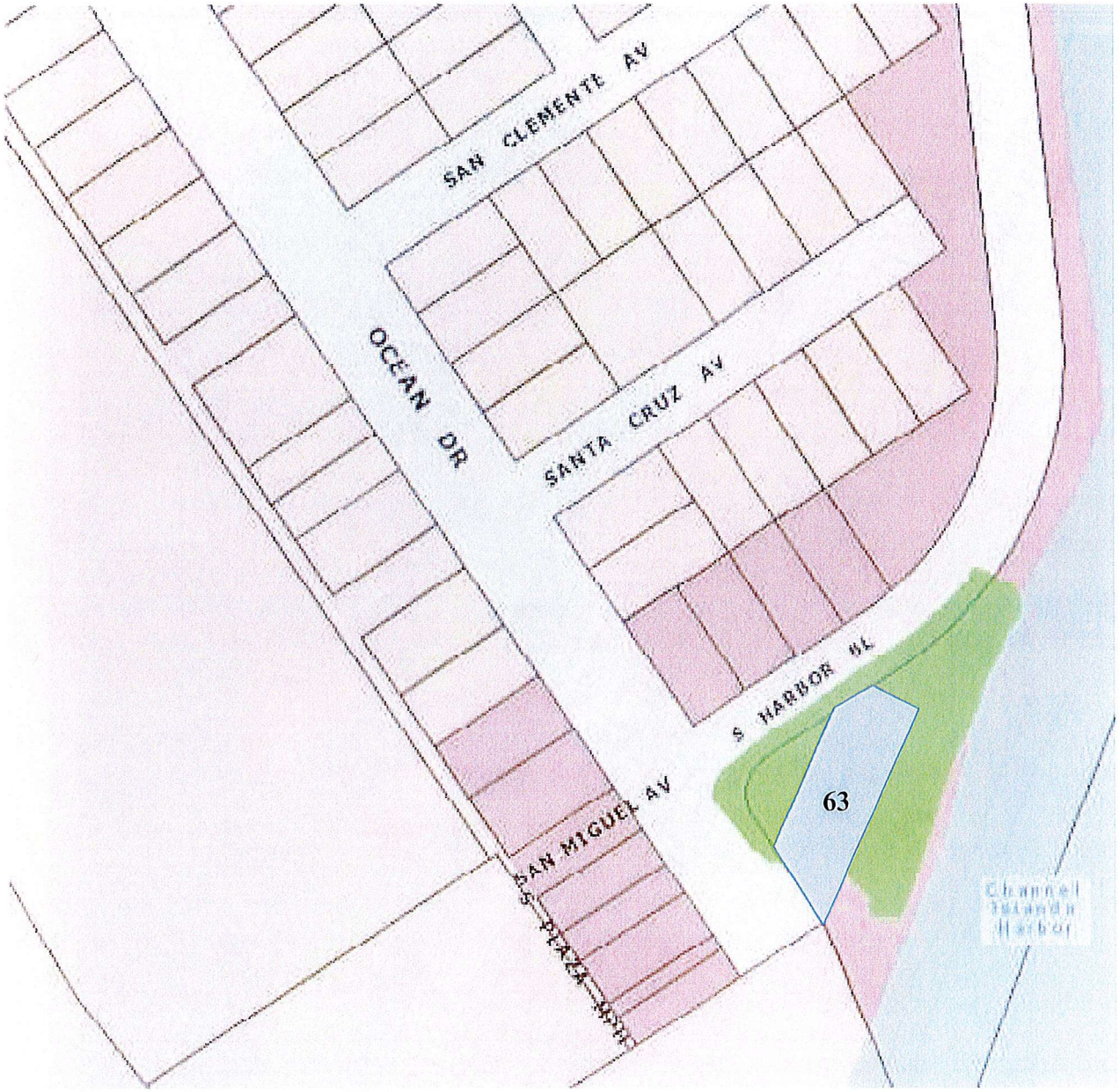

SCOPE OF SERVICES EXHIBIT ATTACHMENT NO. 3

PARKING LOT 64
DOWNTOWN PARKING STRUCTURE

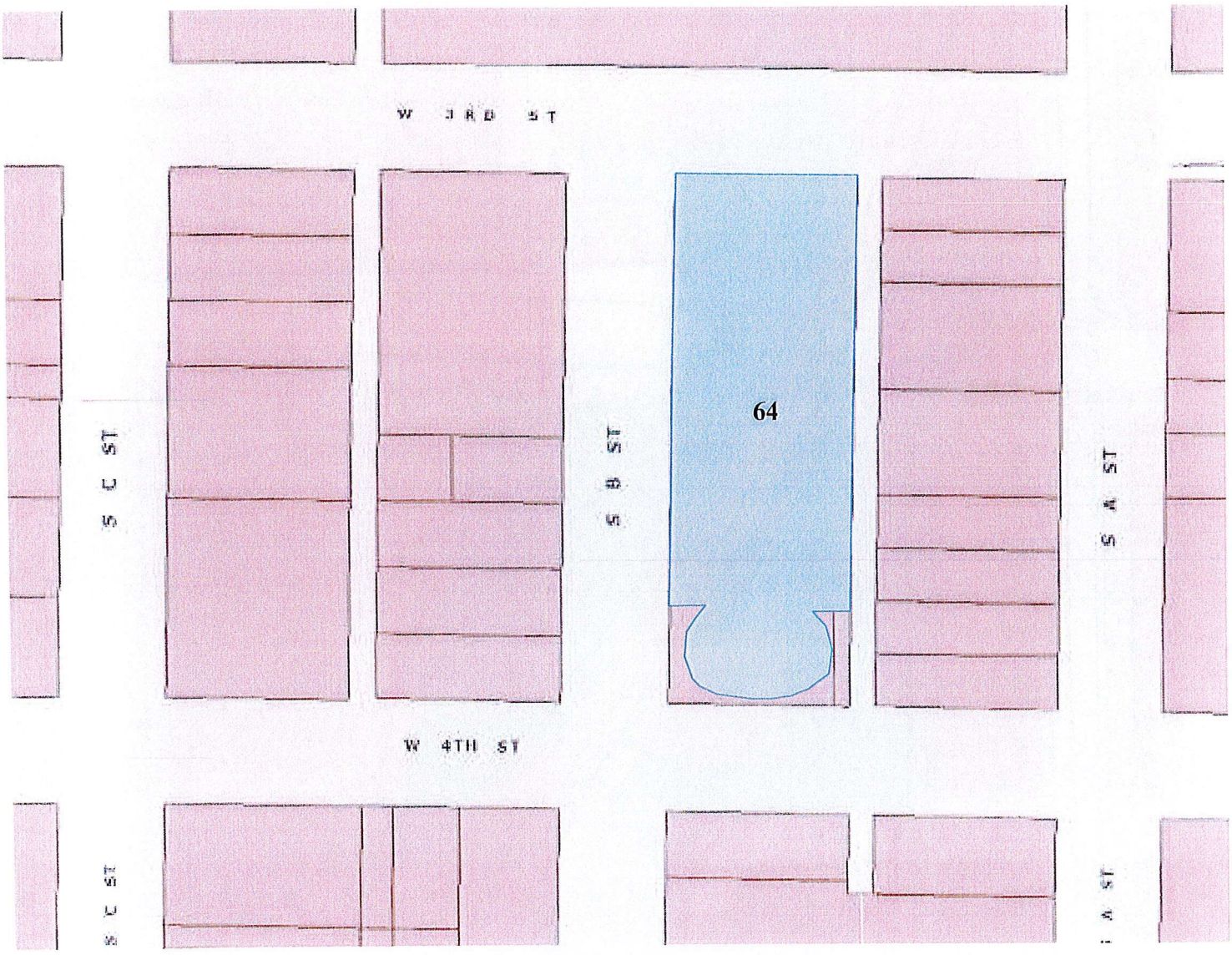

SCOPE OF SERVICES EXHIBIT ATTACHMENT NO. 3

PARKING LOT 65 & 66

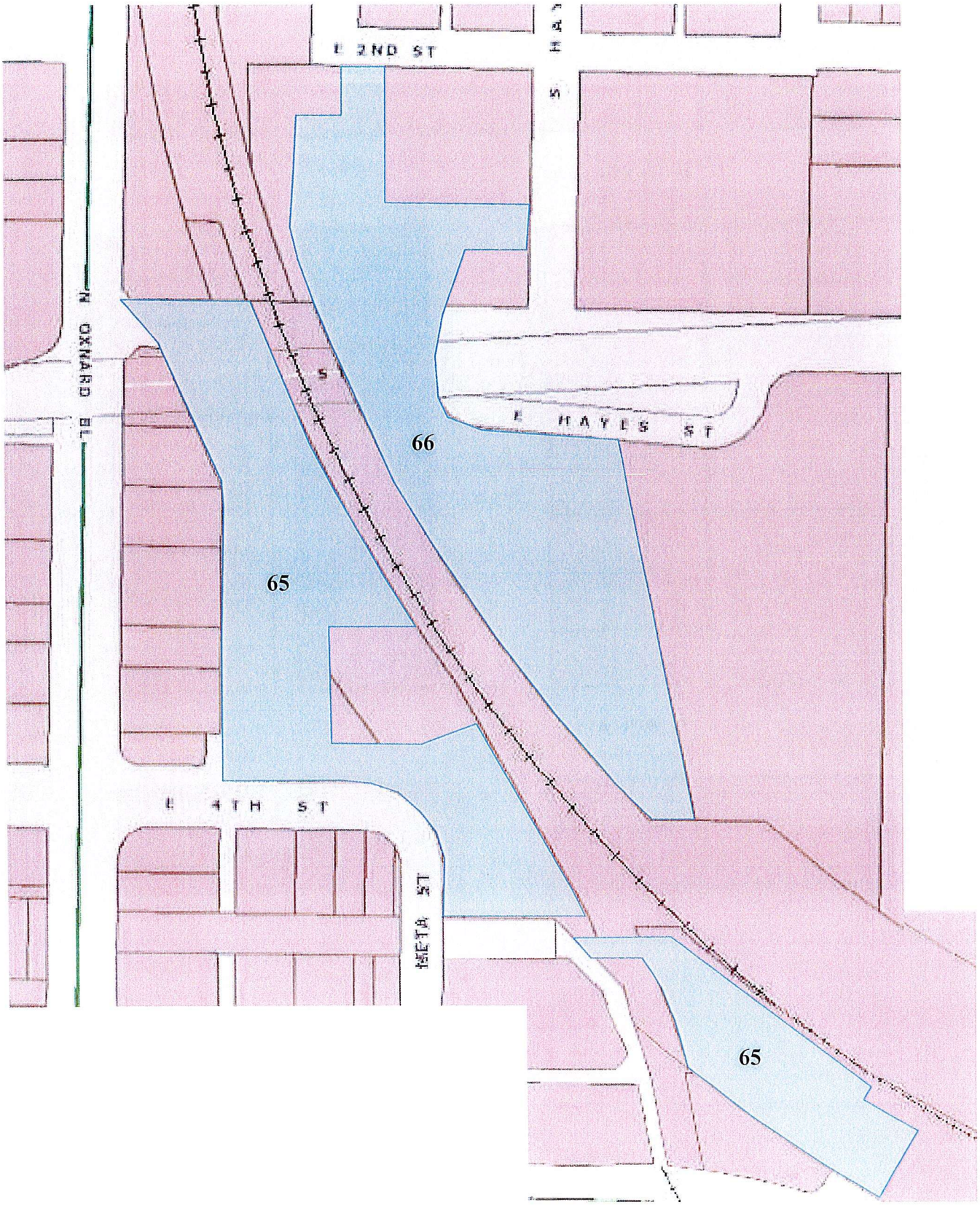

SCOPE OF SERVICES EXHIBIT ATTACHMENT NO. 3

PARKING LOT 68

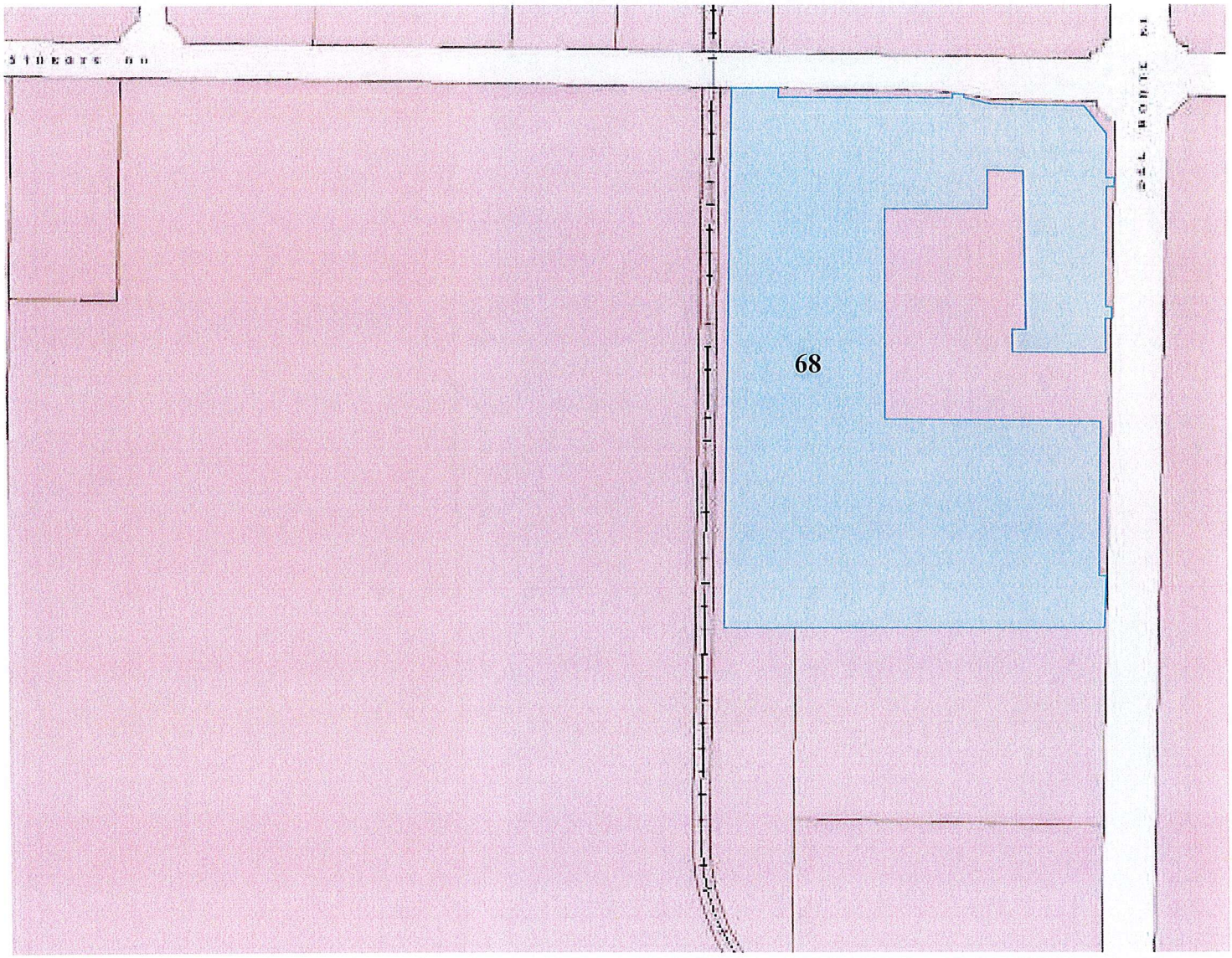

SCOPE OF SERVICES EXHIBIT ATTACHMENT NO. 3

PARKING LOT 69

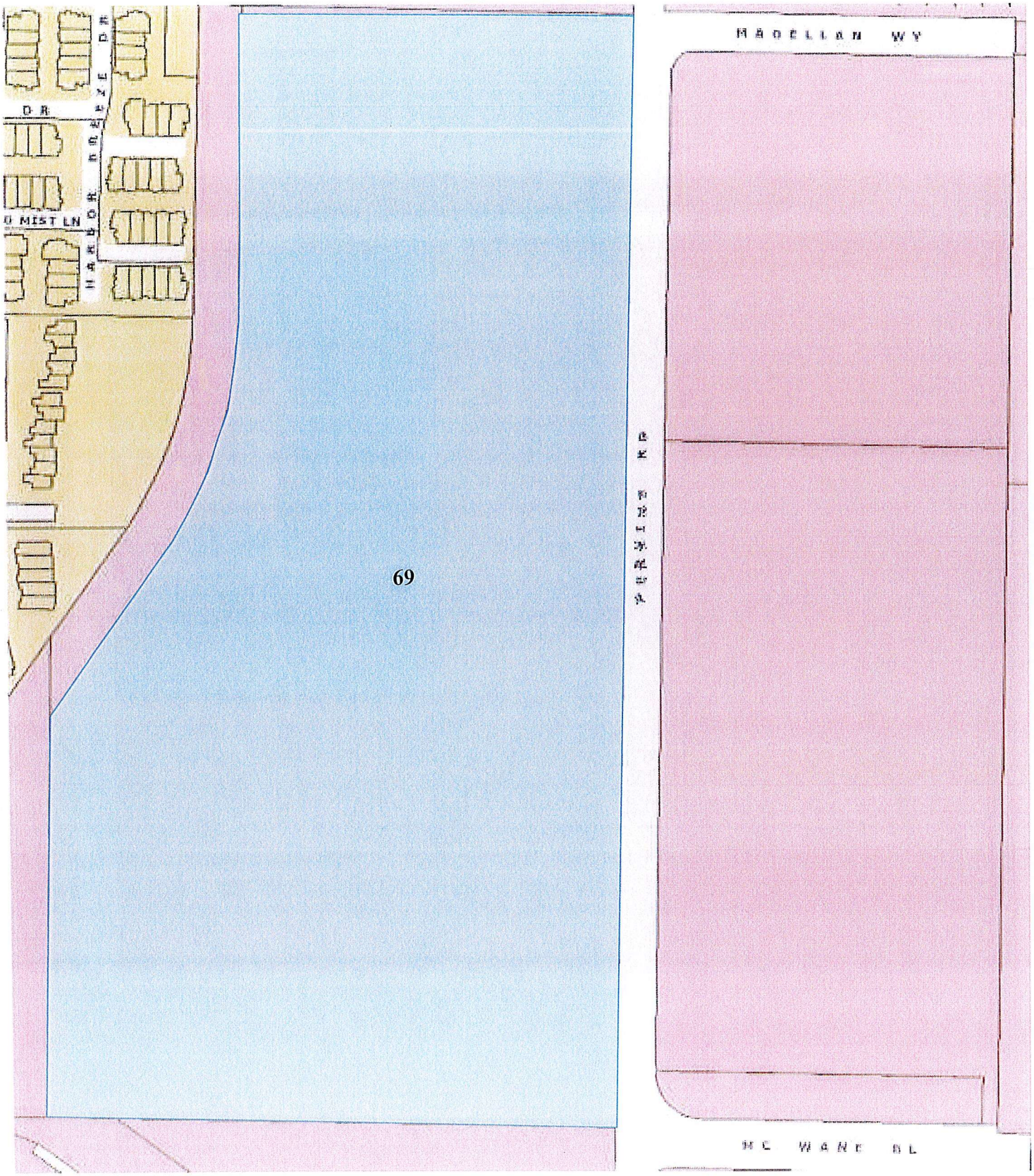

RATES AND COSTS EXHIBIT

1.0

City of Oxnard Street Sweeping Service	Rate Per Curb Mile	Total Monthly Curb Miles	Monthly Fee Not to Exceed
Residential/Restricted - Bi-Weekly	$28.00	1,180 curb miles	$33,040.00
Less Holiday Weeks – No Sweeping	($28.00)	(295) curb miles	($8,260.00)
Alleyway – 5th week of Every Month & Holiday Weeks When Residential/Restricted Sweeping is Suspended	$28.00	140 curb miles	$3,920.00
Arterial – Bi-Weekly	$21.00	618 curb miles	$12,978.00
Downtown – Weekly	$21.00	30.8 curb miles	$646.80
Parking Lot – Weekly	See Section 3.0	33 Parking Lots	$2,000.00
Parking Lot – Monthly	See Section 3.0	30 Parking Lots	$750.00
Monthly Standard Service Fee Not to Exceed			$45,074.80

2.0 Parking Lot Sweeping Compensation Rates By Category:

Weekly Sweep Service – 33 parking lots on weekly sweeping schedule, unit prices per table in section 3.0. Aggregate total per month for weekly swept parking lots is: **$2,000.00**

Monthly Sweep Service – 29 parking lots on monthly sweeping schedule, unit prices per table section 3.0. Aggregate total per month for monthly swept parking lots is: **$750.00**

3.0 Unit Pricing – Parking Lots

WEEKLY FREQUENCY	
Lot No.	Price Per Month
4	$60.60
5	$60.60
19	$60.60
20	$60.60
21	$60.60
22	$60.60
23	$60.60
24	$60.60
25	$60.60
26	$60.60
27	$60.60
28	$60.60
29	$60.60
30	$60.60
31	$60.60
32	$60.60
33	$60.60
34	$60.60
35	$60.60
36	$60.60
37	$60.60
38	$60.60
39	$60.60

MONTHLY FREQUENCY	
Lot No.	Price Per Sweep/Month
1	$25.00
2	$25.00
6	$25.00
7	$25.00
8	$25.00
9	$25.00
10	$25.00
11	$25.00
12	$25.00
13	$25.00
14	$25.00
15	$25.00
16	$25.00
17	$25.00
18	$25.00
48	$25.00
49	$25.00
50	$25.00
51	$25.00
56	$25.00
58	$25.00
59	$25.00
60	$25.00

40	$60.60		61	$25.00
41	$60.60		62	$25.00
42	$60.60		63	$25.00
43	$60.60		64	See Section 4.0 Below
44	$60.60		65	$25.00
44A	$60.60		66	$25.00
45	$60.60		67	$25.00
46	$60.60		68	See Section 5.0 Below
46A	$60.60		69	$25.00
47	$60.80			

4.0 Parking Lot No. 64, Downtown Parking Structure, shall be swept on a twice per week basis for the amount **$100.00** per sweep. Vendor shall mail invoice for payment to: City Of Oxnard -Facilities Maintenance Division. Attention: Division Manager. 1060 Pacific Avenue, Oxnard, CA 93030

5.0 Sweeping at the Del Norte Facility (Parking Lot No.68) shall occur one-time daily Monday through Saturday during closing hours from 5:00 p.m. to 5:30 a.m. Areas to be swept include parking lots, loading docks, truck and trailer staging areas, scale areas, ingress areas, and all other vehicle traffic asphalt pavement surface areas at the facility site. Monthly price for sweeping: **$2,000.00**. Vendor shall line itemized this service cost on monthly invoice to the City.

Daily sweeping shall occur one-time daily Monday through Saturday on Del Norte Boulevard from Sturgis Road to Fifth Street and on Sturgis Road from Del Norte Boulevard to Elevar Street. Monthly price for sweeping: **$1,000.00**. Vendor shall line itemize this service cost on monthly invoice to the City.

6.0 Removal of 13.4 cubic yard roll-off container from arterials or other sites used exclusively by Vendor for containment of only street sweeping debris. Fee per pickup and removal of 13.4 cubic yard roll-off container shall be fee listed in effective City ordinance establishing solid waste system user fees and charges for pickup and removal of 13.4 cubic yard roll-off container.

7.0 Hourly rates for extra sweeps, on-call alleyway sweeping, special sweeps, and emergency sweeps are as follows:

Regular Hour Rate (7:00 a.m. to 5:00 p.m., Monday through Friday): **$120.00**

After Hour/Holiday/Weekend Rate: **$150.00**

INSURANCE EXHIBIT Exhibit INS-D

INSURANCE REQUIREMENTS FOR SMALL/MEDIUM CONSTRUCTION AND SERVICES CONTRACTS (WITHOUT BUILDER'S RISK REQUIREMENT)

1. Contractor shall obtain and maintain during the performance of any services under this Contract the following insurance against claims for injuries to persons or damages to property which may arise from or in connection with the performance of services hereunder by Contractor, its agents, representatives, employees or subcontractors.

a. Commercial General Liability Insurance, including Contractual Liability, in an amount not less than $1,000,000 combined single limit for bodily injury and property damage for each claimant for general liability with coverage equivalent to Insurance Services Office Commercial General Liability Coverage (Occurrence Form CG 0001). If a general aggregate limit is used, that limit shall apply separately to the project location or shall be twice the occurrence amount;

b. Business Automobile Liability Insurance in an amount not less than $1,000,000 combined single limit for bodily injury and property damage for each claimant for automobile liability with coverage equivalent to Insurance Services Office Automobile Liability Coverage (Occurrence Form CA0001) covering Code No. 1, "any auto;"

c. If architectural, engineering, or electrical work will be performed under the Contract, Professional Liability/Errors and Omissions Insurance appropriate to the work being done in an amount not less than $1,000,000, with neither Contractor nor listed subcontractors having less than $500,000 individually. The Professional Liability/Errors and Omissions Insurance must be project specific with at least a one-year extended reporting period, or longer upon request.

d. Workers' Compensation Insurance in compliance with the laws of the State of California, and Employer's Liability Insurance in an amount not less than $1,000,000 per claimant. Additionally, the workers' compensation policy shall include a waiver of all rights of subrogation which the insurer may have against the City.

1. Contractor shall, prior to performance of any services, file with the Risk Manager certificates of insurance with original endorsements effecting coverage required by this Exhibit INS-D. The certificates and endorsements for each insurance policy are to be signed by a person authorized by that insurer to bind coverage on its behalf. The certificates and endorsements are to be on the attached forms or on other forms approved by the Risk Manager. All certificates and endorsements are to be received and approved by the Risk Manager before work commences. City reserves the right to require complete certified copies of all required insurance policies at any time. The certificates of insurance and endorsements shall be sent via email (or fax if necessary) to the Risk Manager, addressed as follows (do not send hard copies):

City of Oxnard
Insurance Compliance
Reference No. A-8230
P.O. Box 100085 – OX
Duluth, GA 30096
Via Email: cityofoxnard@ebix.com
Via Fax: 678-259-1007

2. Contractor agrees that all insurance coverages shall be provided by a California admitted insurance carrier with an A.M. Best rating of A:VII or better and shall be endorsed to state that coverage may not be suspended, voided, canceled by either party, or reduced in coverage or limits without 30 days' prior written notice to the Risk Manager. The Risk Manager shall not approve or accept any endorsement if the endorsement contains "best effort" modifiers or if the insurer is relieved from the responsibility to give such notice.

3. Contractor agrees that the Commercial General Liability and Business Automobile Liability Insurance policies shall be endorsed to name City, its City Council, officers, employees and volunteers as additional insureds as respects: liability arising out of activities performed by or on behalf of Contractor; products and completed operations of Contractor; premises owned, occupied or used by Contractor; or automobiles owned, leased, hired or borrowed by Contractor. The coverage shall contain no special limitations on the scope of protection afforded to City, its City Council, officers, employees and volunteers. **The General Liability Special Endorsement Form and Automobile Liability Special Endorsement Form attached to this Exhibit INS-D or substitute forms containing the same information and acceptable to the Risk Manager shall be used to provide the endorsements (ISO form CG 2010 11/85 or if not available, CG 2010 with an edition date prior to 01/04 and CG 2037).**

4. The coverages provided to City shall be primary and not contributing to or in excess of any existing City insurance or self-insurance coverages **(this must be endorsed).** Additionally, the workers' compensation policy shall include a waiver of all rights of subrogation which the insurer may have against the City. Any failure to comply with reporting provisions of the policies shall not affect coverage provided to City, its City Council, officers, employees and volunteers. The insurance shall apply separately to each insured against whom claim is made or suit is brought, except with respect to the limits of the insurer's liability.

5. Any deductibles or self-insured retentions must be declared to and approved by the Risk Manager. At the option of the Risk Manager, either the insurer shall reduce or eliminate such deductibles or self-insured retentions as respects City, its City Council, officers, employees and volunteers, or the Contractor shall procure a bond guaranteeing payment of losses and related investigations, claim administration and defense expenses.

6. All insurance standards applicable to Contractor shall also be applicable to Contractor's subcontractors. Contractor agrees to maintain appropriate agreements with subcontractors and to provide proper evidence of coverage upon receipt of a written request from the Risk Manager.

INSTRUCTION FOR SUBMITTING INSURANCE CERTIFICATES AND ENDORSEMENT FORMS

Certificates of Insurance

The sample accord form on the following page is provided to facilitate your preparation and submission of certificates of insurance. You may use this or any industry form that shows coverage as broad as that shown on the attached sample. **Please note the certificate holder address must be as shown on the attached sample accord form with the contract number and insurance exhibit identification information completed.** Improperly addressed certificates may delay the contract start-up date because the City's practice is to return unidentifiable insurance certificates to the insured for clarification as to the contract number. **Cancellation provisions must be endorsed to the policy. Modifying the certificate does not change coverage or obligate the carrier to provide notice of cancellation.**

Endorsement Forms

Original endorsements are required for general liability and automobile liability insurance policies and must be attached to the applicable certificate of insurance. City preference is that you use the endorsement forms which are attached. Substitute forms will be accepted, however, as long as they include provisions comparable to the attached.

INS-D.doc

ACORD CERTIFICATE OF INSURANCE

ISSUE DATE (MM/DD/YY)

PRODUCER

THIS CERTIFICATE IS ISSUED AS A MATTER OF INFORMATION ONLY AND CONFERS NO RIGHTS UPON THE CERTIFICATE HOLDER. THIS CERTIFICATE DOES NOT AMEND, EXTEND OR ALTER THE COVERAGE AFFORDED BY THE POLICIES BELOW.

CODE SUB-CODE

COMPANIES AFFORDING INSURANCE COVERAGE

INSURED

COMPANY LETTER A SPECIFY COMPANY NAMES IN THIS SPACE

COMPANY LETTER B

COVERAGES

THIS IS TO CERTIFY THAT THE POLICIES OF INSURANCE LISTED BELOW HAVE BEEN ISSUED TO THE INSURED NAMED ABOVE FOR THE POLICY PERIOD INDICATED, NOTWITHSTANDING ANY REQUIREMENT, TERM OR CONDITION OF ANY CONTRACT OR OTHER DOCUMENT WITH RESPECT TO WHICH THIS CERTIFICATE MAY BE ISSUED OR MAY PERTAIN, THE INSURANCE AFFORDED BY THE POLICIES DESCRIBED HEREIN IS SUBJECT TO ALL THE TERMS, EXCLUSIONS AND CONDITIONS OF SUCH POLICIES. LIMITS SHOWN MAY HAVE BEEN REDUCED BY PAID CLAIMS.

CO LTR	TYPE OF INSURANCE	POLICY NUMBER	POLICY EFFECTIVE DATE (MM/DD/YY)	POLICY EXPIRATION DATE (MM/DD/YY)	LIMITS	
A	**GENERAL LIABILITY** [x] COMMERCIAL GENERAL LIABILITY [x] CLAIMS MADE [x] OCCUR. [x] OWNER'S & CONTRACTOR'S PROT.				GENERAL AGGREGATE PRODUCTS COMP/OP AGG. PERSONAL & ADV. INJURY EACH OCCURRENCE FIRE DAMAGE (Any one fire) MED. EXPENSE (Any one person)	$1,000,000 $1,000,000 $1,000,000 $1,000,000 $ $
A	**AUTOMOBILE LIABILITY** [x] ANY AUTO ALL OWNED AUTOS SCHEDULED AUTOS HIRED AUTOS NON-OWNED AUTOS GARAGE LIABILITY				COMBINED SINGLE LIMIT BODILY INJURY (Per person) BODILY INJURY (Per accident) PROPERTY DAMAGE	$1,000,000 $ $ $
A	**EXCESS LIABILITY** UMBRELLA FORM OTHER THAN UMBRELLA FORM				EACH OCCURRENCE AGGREGATE	$ $
A	**WORKERS' COMPENSATION AND EMPLOYERS' LIABILITY**				STATUTORY LIMITS EACH ACCIDENT DISEASE-POLICY LIMIT DISEASE-EACH EMPLOYEE	 $1,000,000 $1,000,000 $1,000,000
A	**OTHER** Errors and omissions insurance or malpractice insurance available for the insured's profession; if architectural, engineering or electrical work will be performed under the Agreement				Minimum coverage Each consultant/ & listed sub-consultant	$1,000,000 $500,000

SAMPLE

DESCRIPTION OF OPERATIONS/LOCATIONS/VEHICLES/RESTRICTIONS/SPECIAL ITEMS

CERTIFICATE HOLDER

CITY OF OXNARD
Attn: Insurance Compliance
Reference No._____
P.O. Box 100085 – OX
Duluth, GA 30096
Via Email: cityofoxnard@ebix.com
Via Fax: 678-259-1007

CANCELLATION
SHOULD ANY OF THE ABOVE DESCRIBED POLICIES BE CANCELED BEFORE THE EXPIRATION DATE THEREOF, THE ISSUING COMPANY WILL ~~ENDEAVOR TO~~ MAIL 30 DAYS WRITTEN NOTICE TO THE CERTIFICATE HOLDER NAMED TO THE LEFT, ~~BUT FAILURE TO MAIL SUCH NOTICE SHALL IMPOSE NO OBLIGATION OR LIABILITY OF ANY KIND UPON THE COMPANY, ITS AGENTS OR REPRESENTATIVES.~~

AUTHORIZED REPRESENTATIVE

GENERAL LIABILITY SPECIAL ENDORSEMENT
FOR THE CITY OF OXNARD (the "City")

SUBMIT IN DUPLICATE

ENDORSEMENT NO.	ISSUE DATE (MM/DD/YY)

PRODUCER

Telephone:

NAMED INSURED

POLICY INFORMATION:
Insurance Company:
Policy No.:
Policy Period: (from) (to)
LOSS ADJUSTMENT EXPENSE ☐ Included in Limits
☐ In Addition to Limits

☐ Deductible ☐ Self-Insured Retention (check which) of $ _____
with an Aggregate of $_____ applies to _____
coverage. ☐ Per Occurrence ☐ Per Claim (which)

APPLICABILITY This insurance pertains to the operations, products and/or tenancy of the named insured under all written agreements and permits in force with the City unless checked here ☐ in which case only the following specific agreements and permits with the City are covered:

CITY AGREEMENTS/PERMITS

TYPE OF INSURANCE

GENERAL LIABILITY
☐ COMMERCIAL GENERAL LIABILITY
☐ COMPREHENSIVE GENERAL LIABILITY
☐ OWNERS & CONTRACTORS PROTECTIVE

☐ Claims Made
Retroactive Date _____
☐ Occurrence

OTHER PROVISIONS

COVERAGES	LIABILITY LIMITS IN THOUSANDS $ EACH OCCURRENCE	AGGREGATE
☐ GENERAL		
☐ PRODUCTS/COMPLETED OPERATIONS		
☐ PERSONAL & ADVERTISING INJURY		
☐ FIRE DAMAGE		
☐ _____		
☐ _____		

Underwriter=s representative for claims pursuant to this insurance.

CLAIMS:
Name:_____
Address: _____
Telephone: (____) _____

In consideration of the premium charged and notwithstanding any inconsistent statement in the policy to which this endorsement is attached or any endorsement now or hereafter attached thereto, insurance company agrees as follows:

1. **INSURED.** The City, its officers, agents, employees and volunteers are included as insureds with regard to liability and defense of suits arising from the operations, products and activities performed by or on behalf of the named insured.
2. **CONTRIBUTION NOT REQUIRED.** As respects: (a) work performed by the named insured for or on behalf of the City; or (b) products sold by the named insured to the City; or (c) premises leased by the named insured from the City, the insurance afforded by this policy shall be primary insurance as respects the City, its officers, agents, employees or volunteers; or stand in an unbroken chain of coverage excess of the named insured's scheduled underlying primary coverage. In either event, any other insurance maintained by the City, its officers, agents, employees or volunteers shall be in excess of this insurance and shall not contribute with it.
3. **SEVERABILITY OF INTEREST.** This insurance applies separately to each insured against whom claim is made or suit is brought except with respect to the company's limits of liability. The inclusion of any person or organization as an insured shall not affect any right which such person or organization would have as a claimant if not so included.
4. **CANCELLATION NOTICE.** With respect to the interests of the City, this insurance shall not be canceled, or materially reduced in coverage or limits except after thirty (30) days prior written notice by receipted delivery has been given to the City.
5. **PROVISIONS REGARDING THE INSURED'S DUTIES.** Any failure to comply with reporting provisions of the policy or breaches or violations of warranties shall not affect coverage provided to the City, its officers, agents, employees or volunteers.
6. **SCOPE OF COVERAGE.** This policy, if primary, affords coverage at least as broad as:
   a. Insurance Services Office Commercial General Liability Coverage, "occurrence" form CG0001; or
   b. If excess, affords coverage which is at least as broad as the primary insurance form CG0001.

Except as stated above nothing herein shall be held to waive, alter or extend any of the limits, conditions, agreements or exclusions of the policy to which this endorsement is attached.

ENDORSEMENT HOLDER

CITY OF OXNARD
Attn: Insurance Compliance
Reference No._____
P.O. Box 100085 – OX
Duluth, GA 30096
Via Email: cityofoxnard@ebix.com
Via Fax: 678-259-1007

AUTHORIZED REPRESENTATIVE
☐ Broker/Agent ☐ Underwriter ☐ ____

I _____ (print/type name), warrant that I have authority to bind the above-mentioned insurance company and by my signature hereon do so bind this company to this endorsement.

Signature _____
(original signature required)

Telephone: ( ) Date Signed _____

Rev. 8/20 INS-D.d

AUTOMOBILE LIABILITY SPECIAL ENDORSEMENT
FOR THE CITY OF OXNARD (the "City")

SUBMIT IN DUPLICATE

ENDORSEMENT NO.	ISSUE DATE (MM/DD/YY)

PRODUCER

Telephone:

NAMED INSURED

POLICY INFORMATION:
Insurance Company:
Policy No.:
Policy Period: (from) (to)
LOSS ADJUSTMENT EXPENSE ☐ Included in Limits
☐ In Addition to Limits

☐ Deductible ☐ Self-Insured Retention (check which) of $ _____
with an Aggregate of $_____ applies to _____
coverage. ☐ Per Occurrence ☐ Per Claim (which)

APPLICABILITY. This insurance pertains to the operations, products and/or tenancy of the named insured under all written agreements and permits in force with the City unless checked here ☐ in which case only the following specific agreements and permits with the City are covered:

CITY AGREEMENTS/PERMITS

TYPE OF INSURANCE

☐ COMMERCIAL AUTO POLICY
☐ BUSINESS AUTO POLICY
☐ OTHER

OTHER PROVISIONS

LIMIT OF LIABILITY

$ _____ per accident, for bodily injury and property damage.

CLAIMS: Underwriter's representative for claims pursuant to this insurance.
Name: _____
Address:__
_____
Telephone: ()____

In consideration of the premium charged and notwithstanding any inconsistent statement in the policy to which this endorsement is attached or any endorsement now or hereafter attached thereto, insurance company agrees as follows:

1. **INSURED.** The City, its officers, agents, volunteers and employees are included as insureds with regard to liability and defense of suits arising from the operations, products and activities performed by or on behalf of the named insured.
2. **CONTRIBUTION NOT REQUIRED.** As respects: (a) work performed by the named insured for or on behalf of the City; or (b) products sold by the named insured to the City; or (c) premises leased by the named insured from the City, the insurance afforded by this policy shall be primary insurance as respects the City, its officers, agents, employees or volunteers; or stand in an unbroken chain of coverage excess of the named insured's scheduled underlying primary coverage. In either event, any other insurance maintained by the City, its officers, agents, employees or volunteers shall be in excess of this insurance and shall not contribute with it.
3. **SEVERABILITY OF INTEREST.** This insurance applies separately to each insured against whom claim is made or suit is brought except with respect to the company's limits of liability. The inclusion of any person or organization as an insured shall not affect any right which such person or organization would have as a claimant if not so included.
4. **CANCELLATION NOTICE.** With respect to the interests of the City, this insurance shall not be canceled, or materially reduced in coverage or limits except after thirty (30) days prior written notice by receipted delivery has been given to the City.
5. **PROVISIONS REGARDING THE INSURED'S DUTIES.** Any failure to comply with reporting provisions of the policy or breaches or violations of warranties shall not affect coverage provided to the City, its officers, agents, employees or volunteers.
6. **SCOPE OF COVERAGE.** This policy, if primary, affords coverage at least as broad as:
   a. Insurance Services Office Automobile Liability Coverage, "occurrence" form CA0001, code ("any auto"); or
   b. If excess, affords coverage which is at least as broad as the primary insurance form referenced in the preceding section (1).

Except as stated above nothing herein shall be held to waive, alter or extend any of the limits, conditions, agreements or exclusions of the policy to which this endorsement is attached.

ENDORSEMENT HOLDER

CITY OF OXNARD
Attn: Insurance Compliance
Reference No._____
P.O. Box 100085 – OX
Duluth, GA 30096
Via Email: cityofoxnard@ebix.com
Via Fax: 678-259-1007

AUTHORIZED REPRESENTATIVE

☐ Broker/Agent ☐ Underwriter ☐ _____

I _____ (print/type name), warrant that I have authority to bind the above-mentioned insurance company and by my signature hereon do so bind this company to this endorsement.

Signature _____
(original signature required)

Telephone: ( ) Date Signed _____

Rev. 8/20 INS-D.doc

LIVING WAGE POLICY EXHIBIT

The Living Wage Policy of the City of Oxnard is hereby adopted by the City Council on July 9, 2002 to be effective October 1, 2002.

1. Pursuant to this Living Wage Policy, Vendor shall pay those employees who provide services to the City under contract:

   (a) Effective October 1, 2002, at least $9.00 an hour for the time during which the employee is providing services to the City;

   (b) Effective July 1, 2003, at least $9.25 an hour for the time during which the employee is providing services to the City and 32 hours of paid leave per every calendar year in which an employee provides services to the City;

   (c) Effective July 1, 2004, at least $10.59 an hour for the time during which the employee is providing services to the City and 64 hours of paid leave per every calendar year in which an employee provides services to the City; and

   (d) Effective July 1, 2005, at least $12.22 an hour for the time during which the employee is providing services to the City and 96 hours of paid leave per every calendar year in which an employee provides services to the City.

2. The hourly rates established in Section 1 shall be adjusted July 1, 2006 and, each July 1 thereafter, according to the percentage change since July 1, 2005 in the Consumer Price Index prepared by the Bureau of Labor Statistics for the Los Angeles area relating to all urban consumers.

3. A service contractor executing a service contract with the City for which the City will pay the contractor $25,000 or more during the contract term shall be subject to the Living Wage Policy.

4. A service contractor executing more than one service contract with the City, and the combined monetary total of the payments by the City pursuant to such contracts is $25,000 or more for the combined contract terms shall be subject to the Living Wage Policy.

5. This Living Wage Policy shall not govern the following types of contracts for: (a) the purchase, rental or lease of goods, products, equipment, supplies or other personal property; (b) public works projects as defined in State or local law; and (c) professional services.

6. This Living Wage Policy shall not govern the following service contractors: (a) nonprofit entities organized under IRS Code section 501(c)(3); (b) public entities such as cities, counties, special districts, states and the federal government; and (c) businesses employing fewer than five persons.

7. The City Attorney is directed to include in all standard trade services contracts and all contracts involving unique trade services, the language set forth in **Exhibit 1** attached hereto and incorporated herein by this reference.

8. If Vendor fails to comply with this Living Wage Policy, the City Manager is directed to terminate the subject service contract immediately and to impose appropriate fines and penalties as set forth in the service contract.

9. The City Manager and the City Attorney are responsible for the administration and enforcement, respectively, of the Living Wage Policy. If an employee of a service contractor governed by the Living Wage Policy concludes that he/she has been retaliated against for the exercise of rights under the Living Wage Policy, the employee should contact the City Manager at 385-7430.

10. The City Manager shall reasonably cooperate with representatives of the Ventura County Living Wage Coalition to ensure the effective administration and enforcement of the Living Wage Policy.

11. This Living Wage Policy may be changed only by City Council and only after a duly noticed public hearing.

12. The City Manager is directed to ensure that the City Council will review the Living Wage Policy as part of the FY 2003-2004/05 budget process.

Exhibit 1

Living Wage Policy

Pursuant to the Living Wage Policy adopted July 9, 2002 by the City Council and effective October 1, 2002, the City Manager and City Attorney are directed to include the following language in all standard trade services contracts and all unique trade services contracts governed by the Living Wage Policy.

A. Vendor shall compensate any employee of Vendor who provides services under this Agreement in accordance with the Living Wage Policy, attached hereto and incorporated herein by reference as the Living Wage Policy Exhibit. While this Agreement is in effect, Vendor shall pay such employee no less than $16.30 per hour for each hour that such employee provides services under this Agreement. In addition, while this Agreement is in effect, Vendor shall provide to such employee no less than 96 hours of paid leave per calendar year.

B. Vendor agrees to post, at a location readily accessible to those employees providing services to the City, a copy of the Living Wage Policy adopted by City Council on July 9, 2002 and effective October 1, 2002.

C. If Vendor fails to compensate such employee pursuant to the Living Wage Policy, the City Manager or designee shall terminate this Agreement on written notice to Vendor, effective immediately.

D. In addition, if Vendor fails to comply with the Living Wage Policy in any manner, Vendor shall pay to City a fine of $500 and shall pay to any employee providing services under this Agreement a penalty of three times the amount or value of the compensation owed to such employee under the Living Wage Policy. Vendor shall pay such fine and penalty within 15 days after the City Manager or designee provides written notice to Vendor of the amount owed.

CITY OF OXNARD LIVING WAGE REQUIREMENTS
EFFECTIVE JULY 1, 2020

42. a. Vendor shall compensate any employee of Vendor who provides services under this Agreement in accordance with the Living Wage Policy, attached hereto and incorporated herein by reference as Exhibit 1. While this Agreement is in effect, Vendor shall pay such employee no less than **$16.30 per hour** for each hour that such employee provides services under this Agreement. **This hourly rate shall be adjusted on July 1, 2020, and each July 1 thereafter, according to the percentage change in the Consumer Price Index**, all items, prepared by the Bureau of Labor Statistics for the Los Angeles area relating to all urban consumers (CPI-U), index base 1982-84=100, comparing May of the previous year to May of the current year. In addition, while this Agreement is in effect, Vendor shall provide to such employee no less than 96 hours of paid leave per calendar year.

Vendor agrees to post, at a location readily accessible to those employees providing services to the City, a copy of the Living Wage Policy adopted by the Oxnard City Council on July 9, 2002 and effective October 1, 2002.

If Vendor fails to compensate such employee pursuant to the Living Wage Policy, the City Manager or designee shall terminate this Agreement on written notice to Vendor, effective immediately.

In addition, if Vendor fails to comply with the Living Wage Policy in any manner, Vendor shall pay to City a fine of $500 and shall pay to any employee providing services under this Agreement a penalty of three times the amount or value of the compensation owed to such employee under the Living Wage Policy. Vendor shall pay such fine and penalty within 15 days after the City Manager or designee provides written notice to Vendor of the amount owed.

The foregoing requirements are restated on page 5 of the Agreement for Trade Services.

SCHEDULE OF SERVICES EXHIBIT

1.0 General

The contract curb mileage is calculated based on City's Geographical Information System data. City currently has approximately 21,126.40 curb miles swept annually. The chart below identifies the current curb mile types and frequencies swept. See Scope of Services Exhibit Attachment No. 1 for a general map of the street categories listed below. See Scope of Services Exhibit Attachment No. 2 for a detailed map of City medians. Vendor shall have sufficient staff and equipment to meet all sweeping schedules. No routine street sweeping shall occur on Mondays.

City of Oxnard Street Sweeping Agreement	Annual Number of Sweeps	Total Curb Miles Per Sweep	Total Curb Miles Per Month	Total Annual Curb Miles
Residential/Restricted - Bi-Weekly	24	590	1,180	14,160
Less: No Residential/Restricted Sweeping Holiday Weeks	10 Holiday Weeks		(295)	(2,950)
Alleyway – 5th week of Every Month & Holiday Weeks When Residential Sweeping is Suspended	15	140	140	2,100
Arterial – Bi-Weekly	24	309	618	7,416
Downtown – Weekly	52	7.7	30.8	400.4
Total Annual Curb Miles				21,126.40

2.0 Sweeping Schedule

2.1 Residential/Restricted Streets

All Residential/Restricted streets are swept following one of the eight (8) established bi-weekly sweeping schedules as listed below. Residential/Restricted streets schedules are subject to change at any time at the City's Project Manager's discretion and will be updated as needed throughout the term of the Agreement.

DAY OF THE WEEK	WEEK OF THE MONTH
Tuesday	Weeks 1 and 3
Tuesday	Weeks 2 and 4
Wednesday	Weeks 1 and 3
Wednesday	Weeks 2 and 4
Thursday	Weeks 1 and 3
Thursday	Weeks 2 and 4
Friday	Weeks 1 and 3
Friday	Weeks 2 and 4

See Schedule of Services Exhibit Attachment No. 1 for a color coded map and legend of the above-described residential street sweeping routes schedules.

2.2 Unrestricted/Unposted Streets

Streets not posted for restricted parking shall be swept as follows:

Residential 7:00 a.m. to 4:00 p.m.
Arterials/Downtown 11:00 p.m. to 6:00 a.m.

2.3 Arterial Streets

Arterial streets within the City consist of approximately 309 curb miles. Vendor shall be responsible for adhering to the time restrictions stipulated in Section 2.2. Arterial streets are to be swept twice per month on a bi-weekly schedule. Vendor shall provide a professional digitally rendered map displaying the proposed arterial street sweeping routes and schedule to City's Project Manager. Arterial sweeping routes must be mutually agreed upon by Vendor and City's Project Manager prior to commencing arterial street sweeping. Subsequent arterial sweeping route changes and modifications must be approved and mutually agreed upon by Vendor and City's Project Manager.

2.4 Downtown

The City Downtown area consists of approximately 7.7 curb miles (see Scope of Services Exhibit Attachment No. 1 and Scope of Services Exhibit Attachment No. 2). The Downtown area is to be swept weekly during the weekend (Friday, Saturday, or Sunday), according to the time restrictions listed in Section 2.2.

2.5 Del Norte Regional Recycling and Transfer Station (Del Norte Facility) and Surrounding Streets

The site at the Del Norte Facility located at 111 South Del Norte Boulevard in Oxnard and the streets of Del Norte Boulevard and Sturgis Road that bound the Del Norte Facility shall be swept and thoroughly cleaned. Sweeping at the Del Norte Facility shall occur daily Monday through Saturday during closing hours from 5:00 p.m. to 5:30 a.m. Areas to be swept include parking lots, loading docks, truck and trailer staging areas, scale areas, ingress areas, and all other vehicle traffic asphalt pavement surface areas at the facility site. Service frequency may be adjusted from time-to-time and special on-call spot sweeps shall be ordered by the City's Project Manager as needed.

Daily sweeping shall occur Monday through Saturday on Del Norte Boulevard from Sturgis Road to Fifth Street and on Sturgis Road from Del Norte Boulevard to Elevar Street.

2.6 Alleyways

Alleyways are to be swept once per month during the 5th week of every month and on holiday weeks, when Residential street sweeping is suspended (see Section 2.8). Prior to the start of every new calendar year, Vendor and City's Project Manager shall create a mutually agreed upon alleyway sweeping calendar which will be made available for public distribution. Vendor shall also provide a professional digitally rendered map displaying the proposed alleyway street sweeping routes to City's Project Manager. Alleyway sweeping routes must be mutually agreed upon by Vendor and City's Project Manager prior to commencing alleyway street sweeping. Subsequent alleyway route changes and modifications must be approved and mutually agreed upon by Vendor and City's Project Manager.

2.7 Emergencies

In the event of an emergency, Vendor shall have additional personnel and equipment to dispatch to the scene of the incident. Vendor shall not remove a sweeper from an established route to meet an emergency need. Requests for emergency services must be responded to within thirty minutes during Monday through Friday, 7:00 a.m. to 5:00 p.m., and within two hours any other time including weekends and holidays. Rates charged for emergency/after hours sweeping will be at the rates quoted in the unit price schedule in the RATES AND COSTS EXHIBIT.

2.8 Holidays

In a week with a City observed holiday, Vendor shall not sweep residential streets on any day in that week, and respective curb miles shall not be billed to City. Vendor arterial, downtown, and parking lot route schedules shall be adjusted to accommodate the holiday. Alleyways shall be swept as described in Section 2.5.

The City observes the following holidays:

New Years Day (January 1st)
Martin Luther King Day (Third Monday in January)
Presidents Day (Third Monday in February)
Cesar Chavez Day (March 31st)
Memorial Day (Last Monday in May)
Independence Day (July 4th)
Labor Day (First Monday in September)
Veterans Day (November 11th)
Thanksgiving Day (By Presidential proclamation, usually the fourth Thursday in November)
Christmas Day (December 25th)

SCHEDULE OF SERVICES EXHIBIT ATTACHMENT NO. 1

Street Sweeping

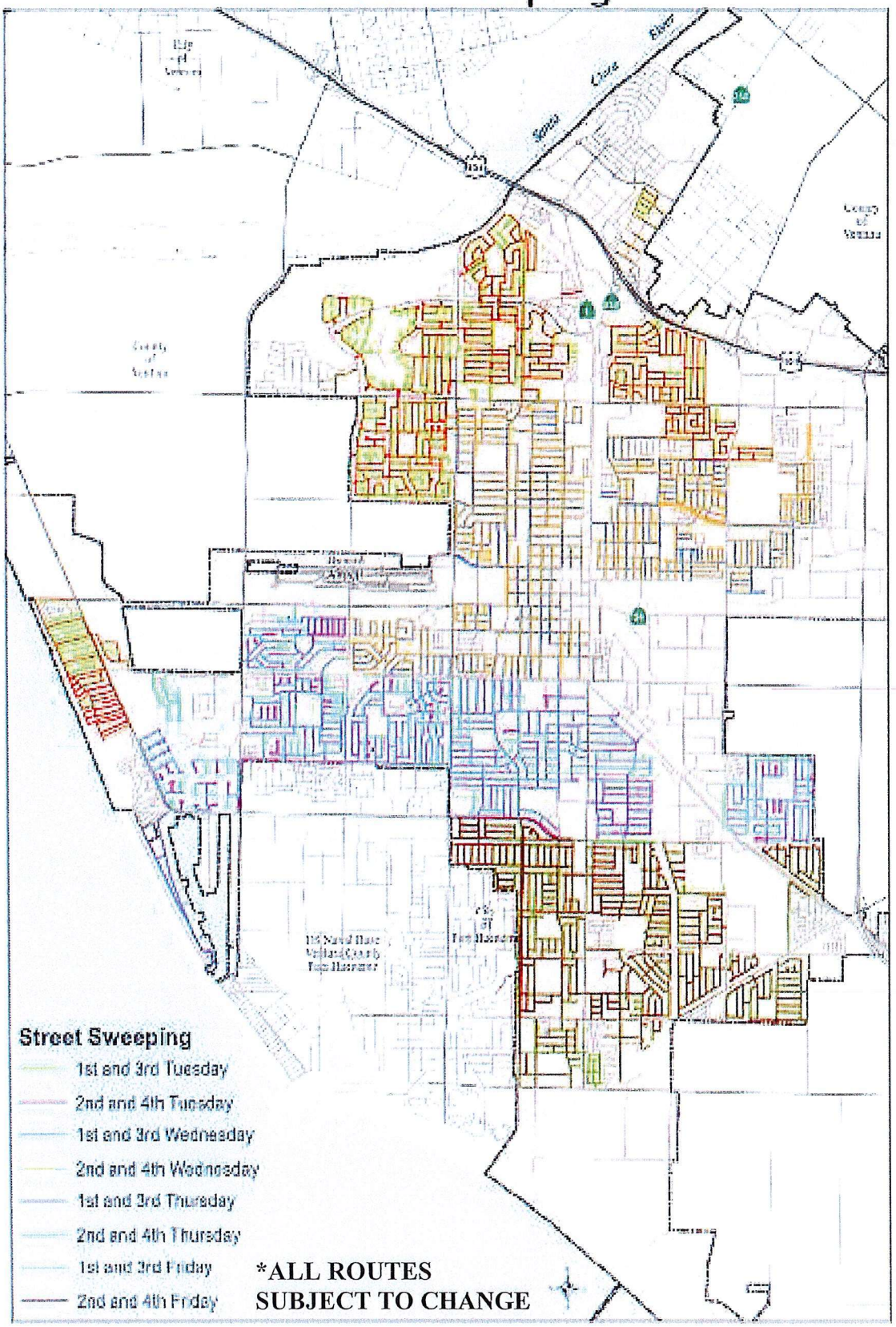

Second Amendment to Agreement No. A-8230 for Citywide Sweeping Service

City Council

September 19, 2023

Eric Zetz

Environmental Resources Division Manager

CITY OF OXNARD CALIFORNIA

RECOMMENDATION

That the City Council approve and authorize:

1. The Mayor to execute an Second Amendment to an Agreement with Sweeping Corporation of America of California (SCA) for citywide street sweeping services, alleyways, parking lots, parking structures and city facilities; extending the term for nine (9) months from October 1, 2023 to June 30, 2024 and increasing the contract total by $2,050,000 for a new contract total not to exceed: $3,850,000 to comply with new State of California mandate for prevailing wage; and
2. A budget appropriation request in the amount of $1,292,312 from the General Fund (101) available fund balance for the Public Works Department for this Amendment in FY 2023-24.

BACKGROUND

- August 2022, Assembly Bill 1886 (AB 1886) expanded the definition of "public works" to include street sweeping, as defined, maintenance performed for the routine cleaning of any publicly owned or publicly operated street

- The State's Department of Industrial Relations (DIR) published the current rate of $91.25 per hour on July 1, 2023, set to increase by $4.00 per hour to $95.25 on July 1, 2024

- Prior to AB 1886, the average wage for a street sweeper driver ranged between $25.00-$35.00

BACKGROUND

- The City of Oxnard outsources all sweeping services:
  - Citywide streets
  - Alleyways
  - Parking lots
  - City facilities

- Regular sweeping required under City's National Pollutant Discharge Elimination System (NPDES) permit issued by State Water Resources Board

- Sweeping days are generally the next business day after the refuse collection schedule

BACKGROUND

- Approximately 21,126 curb miles are swept annually

City of Oxnard Sweeping Agreement	Annual Number of Sweeps	Total Curb Miles Per Sweep	Total Curb Miles Per Month	Total Annual Curb Miles
Residential/Restricted - Bi-Weekly	24	597	1,180	14,160
Less: No Residential/Restricted Sweeping Holiday Weeks	10 Holiday Weeks		(295)	(2,950)
Alleyway – 5th week of Every Month & Holiday Weeks When Residential Sweeping is Suspended	15	~140	140	2,100
Arterial – Bi-Weekly	24	309	618	7,416
Downtown – Weekly	52	7.7	30.8	400.4
Total Annual Curb Miles				**21,126.4**

- Sweeping prevents trash, plant debris and sediment from entering the City's storm drain system

BACKGROUND

- On June 27, 2023, City's Purchasing Division conducted formal solicitation for citywide sweeping services (Bid Number PW23-121)
- Bid information posted on City's website and www.publicpurchase.com
- City received two (2) non-responsive bid responses prior to the deadline of July 25, 2023; and both bids were rejected
- The Second Amendment will comply with prevailing wage provisions and allow time to re-solicit a request for bids. Prevailing Wage requirement ($25/hr to $91/hr)

DISCUSSION

- Sweeping Corporation of America of California (SCA) will provide the following:
  - Regular citywide sweeping
  - Response to on-call emergency sweeping needs
  - Sweeping re-mapping and re-routing

- City does not pay SCA for days sweeping is interrupted (rain, natural disasters, health emergencies, etc.)

- Due to the rejection of all bids from the solicitation on June 27, 2023, this Second Amendment to Agreement A-8230 is recommended.

- SCA meets all City-required contractual provisions

FINANCIAL IMPACT

- Cost for this Second Agreement with SCA to extend the term to June 30, 2024 is $2,050,000

- Significant increase in cost to this contract is due in large part from prevailing wage requirements as approved through AB1886

- FY 2023-24 Adopted Budget allocated approximately $700,000 for these annual services from various funds

- A budget appropriation from the General Fund in the amount of $1,292,312 for FY 2023-24 is being requested to fund this amendment

QUESTIONS?

CITY OF OXNARD CALIFORNIA

CITY COUNCIL AGENDA REPORT

REPORTS
AGENDA ITEM NO. N.3

DATE: September 19, 2023

TO: City Council

FROM: Alexander Nguyen, City Manager, (805) 385-7430, alexander.nguyen@oxnard.org

SUBJECT: Approval of a Funding Agreement between the City and the County of Ventura for the New Family Justice Center in Oxnard. (10 minutes)

RECOMMENDATION

That the City Council:

1. Adopt a Resolution authorizing the Mayor to execute a Funding Agreement with the County of Ventura for $2,000,000 for the purchase of the building located at 554-555 South A Street for the Oxnard Family Justice Center; and
2. Authorize the City Manager or designee to execute the necessary actions to effectuate the transfer of funds.

This item did not originate in Committee as it is a project previously approved by the City Council through the ARPA project selection process.

Please click the following link to view the required Measure M pre-recorded presentation video:
https://youtu.be/lV6NotCHTRg

BACKGROUND

Currently, Ventura County's (County) sole Family Justice Center (FJC) is located in the City of Ventura. It serves roughly 2,500 crime victims per year (not including children in the home) with wraparound services under one roof. Most of these victims are Medi-Cal enrollees, Latinx with two or more minor children in the home, and victims of domestic violence (73%). Nearly 23% of these victims are Mixteco or mono-lingual Spanish speakers and have limited transportation options. The most significant proportion of victims served at the FJC are residents of Oxnard (33%). Currently, Oxnard residents must travel to Ventura to receive FJC services.

DISCUSSION

On June 6, 2023, the Ventura County Board of Supervisors approved the purchase of the building located at 545-555 South A Street in Oxnard (Property). The purchase leverages $2,000,000 in City funds (pending this agenda item's approval by City Council), and County awarded funds of $1,000,000 in State funds and $640,000 in Federal funds, to acquire and build out an Oxnard FJC to better serve Oxnard victims of domestic violence, sexual assault, child abuse, elder abuse, human trafficking, and hate crimes.

The Oxnard FJC will emphasize helping underserved victims in Oxnard and the surrounding unincorporated areas, many of whom do not trust or voluntarily contact law enforcement, are afraid of deportation, and face significant language, cultural, economic, and transportation barriers to accessing the Ventura FJC location.

The Property consists of one parcel with a lot size of 21,000 square feet, improved with a two-story 32,825 square feet

retail building. The County, as the owner of the Property, will be running the day-to-day operation of the Oxnard FJC. Approximately 36% of the Property is unoccupied and will be the focus of improvements to house the Oxnard FJC's initial operations. The remaining 64% of the Property's square footage is currently occupied either by non-profit community-based organizations that are presently partner agencies collaborating with the Ventura FJC (31%) or a mix of non-profit and for-profit entities that are not current FJC partners (33%) through a total of seven leases. The County has confirmed that the seven leases will be honored for the duration of their terms, with negotiations to ensue as to renewals, if any.

Therefore, it is contemplated that Oxnard FJC's operational footprint within the property will increase over time.

City Operations

Although the County owns the Property and is responsible for running the facility's day-to-day operations, the Oxnard Police Department (Oxnard PD) will have a permanent presence inside the Property to assist victims of domestic violence, sexual assault, child abuse, elder abuse, human trafficking, and hate crimes.

STRATEGIC PRIORITIES

This agenda item supports the Organizational Effectiveness strategy. The purpose of the Organizational Effectiveness strategy is to reinforce, stabilize, improve, and strengthen the organizational foundation of the City in order to build a modern, high-functioning City government that effectively and efficiently supports the operating departments in providing high-quality services and programs for our residents and businesses.

This agenda item supports the Quality of Life strategy. The purpose of the Quality of Life strategy is to restore and increase quality services and programs that enrich Oxnard's diverse community, promotes safe neighborhoods, encourages community engagement, and supports our residents in their efforts to improve their quality of life.

This agenda item supports Public Safety strategy. The purpose of the Public Safety strategy is to restore and modernize the delivery of public safety services to provide for the safety of our neighborhoods and health of our community.

FINANCIAL IMPACT

There is no new appropriation associated with this agenda item. The $2,000,000 in funding was previously appropriated for the Oxnard FJC under project M2216 by City Council on March 29, 2022, using American Rescue Plan Act (ARPA) funding identified as replacing lost public sector revenue. This agenda item identifies the details and Funding Agreement regarding the transfer of funds.

For Finance Use Only: Lost Public Sector Revenue Fund (Org. 3208105 Obj. 56010) Project M2216

COMMITTEE OUTCOME

This item did not originate in Committee as it is a project previously approved by the City Council through the ARPA project selection process.

Prepared by: Adam Smith, Project Manager, Jason Zaragoza, Deputy City Attorney

ATTACHMENTS

1. Resolution
2. Funding and Use Agreement - FJC 9-1-23 Final
3. Family Justice Center Presentation.pptx (1)

CITY COUNCIL OF THE CITY OF OXNARD

RESOLUTION NO.

A RESOLUTION OF THE CITY COUNCIL OF THE CITY OF OXNARD AUTHORIZING THE MAYOR TO EXECUTE A FUNDING AGREEMENT WITH THE COUNTY OF VENTURA FOR THE PURCHASE OF THE BUILDING LOCATED AT 554-555 SOUTH A STREET FOR THE OXNARD FAMILY JUSTICE CENTER

WHEREAS, Ventura County's ("County") sole Family Justice Center ("FJC") is located in the city of Ventura; and

WHEREAS, the Ventura FJC serves roughly 2,500 crime victims per year (not including children in the home) with wraparound services under one roof; and

WHEREAS, 73% of these victims are Medi-Cal enrollees, Latinx with two or more minor children in the home, and are victims of domestic violence; and

WHEREAS, nearly 23% of these victims are Mixteco or mono-lingual Spanish speakers and have limited transportation options; and

WHEREAS, although the Ventura FJC provides a plurality of services to Oxnard residents, there are limited locally equivalent solutions for Oxnard residents to receive those services who instead have to travel to Ventura; and

WHEREAS, on June 6, 2023, the Ventura County Board of Supervisors approved the purchase of the building located at 545-555 South A Street in Oxnard ("Property"); and

WHEREAS, the purchase leverages $1,000,000 in State funds and $640,000 in federal funds to acquire and build out an FJC to be located on the Property to better serve Oxnard victims of domestic violence, sexual assault, child abuse, elder abuse, human trafficking, and hate crimes; and

WHEREAS, the Oxnard FJC will emphasize helping underserved victims in Oxnard and the surrounding unincorporated areas, many of whom do not trust or voluntarily contact law enforcement, are afraid of deportation, and face significant language, cultural, economic, and transportation barriers in accessing the Ventura FJC; and

WHEREAS, the Property consists of one parcel with a lot size of 21,000 square feet, improved with a two-story 32,825 square foot building; and

WHEREAS, the Oxnard Police Department will have a permanent presence inside the Oxnard FJC to assist victims of domestic violence, sexual assault, child abuse, elder abuse, human trafficking, and hate crimes; and

WHEREAS, the Oxnard City Council desires to authorize the Mayor to execute a Funding Agreement with the County in the amount of $2,000,000 for the purchase of the Property; and

WHEREAS, the Oxnard City Council previously appropriated $2,000,000 in funding for the purchase of the Property on March 29, 2022, using ARPA funding identified as replacing lost public sector revenue.

NOW, THEREFORE, the City Council of the City of Oxnard resolves to authorize the Mayor to execute a Funding Agreement with the County in the amount of $2,000,000 for the purchase of the building located at 554-555 South A Street.

PASSED AND ADOPTED THIS ____th day of July 2023, by the following vote:

AYES:

NOES:

ABSENT:

ABSTAIN:

_____
John C. Zaragoza, Mayor

ATTEST:

_____
Rose Chaparro, City Clerk

APPROVED AS TO FORM:

_____
Stephen M. Fischer, City Attorney

FUNDING AND USE AGREEMENT REGARDING FAMILY JUSTICE CENTER IN THE CITY OF OXNARD

This Funding and Use Agreement Regarding Family Justice Center in the City of Oxnard ("Agreement") is entered into as of September 26, 2023 (the "Effective Date"), by and between the COUNTY OF VENTURA, ("County") and the City of Oxnard ("City"), a California municipal corporation, with reference to the following facts. County and City may be referred to collectively herein as the "Parties."

RECITALS

A. As of the Effective Date, the County owns real property, improved with a two-story building, located at 554-555 South A Street in the City of Oxnard, California ("Property"), which the County acquired for $4,100,000 ("Acquisition Costs").

B. The County intends to establish a Family Justice Center ("FJC") at the Property to support underserved residents of the City of Oxnard and the surrounding unincorporated areas, including victims of domestic violence, sexual assault, child abuse, elder abuse, human trafficking and hate crimes.

C. The City desires to provide a $2,000,000 payment to County to contribute toward the County's Acquisition Costs upon certain conditions, including the condition that the County establish a FJC at the Property and allow City use of the FJC to further the purpose of the FJC.

NOW, THEREFORE, in consideration of the Recitals hereof and the mutual promises and covenants set forth in this Agreement, the Parties agree as follows:

AGREEMENT

Section 1. Recitals. The foregoing recitals are incorporated herein by this reference.

Section 2. Payment. The City shall provide the County with a one-time payment in the amount of two million dollars ($2,000,000.00) within 60 days after the Effective Date. County shall use the payment solely to help offset the County's Acquisition Costs.

Section 3. Term. This Agreement shall be in effect from the Effective Date for a period of 20 years, unless terminated sooner in accordance with the applicable provision of this Agreement. The Parties may extend the term of this Agreement by mutual written agreement.

Section 4. Establishment of FJC. The City's payment is conditioned on the County's establishment of a FJC at the Property to support to the underserved residents of the City of Oxnard and the surrounding unincorporated areas, including victims of domestic violence, sexual assault, child abuse, elder abuse, human trafficking and hate crimes.

Section 5. City's Use of FJC. While this Agreement remains in effect, the County shall provide the City with use of the FJC and Property in accordance with the following:

A. Exclusive secured badge access and use for the City of Oxnard Police Department ("OPD") as follows: (i) one office for sergeant for the OPD Family Protection Unit; (ii) one office for three detectives for the OPD Domestic Violence Investigations Unit and Internet Crimes Against Children; (iii) one office for five OPD detectives for the Sexual Assault Investigations Unit; and (iv) one office for OPD general law enforcement staff.

B. Secured Safe Harbor examination, interview, observation and family rooms for a total of four (4) offices.

C. Security features including badge access, premises lighting, video monitoring and security alarm system. County will work with City to designate and secure parking for City employees.

D. Furnishings, business machines, internet access and connectivity to OPD database.

E. City shall not conduct any commercial activity at the FJC without the prior written consent of County which may be withheld in the sole judgment of County.

F. If City desires to engage or use the services of a third party in connection with any improvements or repairs to the City offices provided under this Agreement, City shall give County written notice of such intention prior to commencement of any such work. Said notice shall state the name, address, and qualifications of the third party, and County shall have the right to refuse to permit, to condition, or to stop any such work at any time and in its sole judgment.

G. City shall conform to all rules and regulations, and local building and fire codes in connection with its use of the City offices provided under this Agreement. City shall not engage in or permit any activity at the FJC which causes an increase to County's insurance rates or damage to the FJC. Any use of power tools by City at the FJC that increase the hazard of fire is strictly prohibited. City agrees to fully and promptly compensate County, upon demand, for any and all costs associated with the loss of and damage to the Property caused by City's use

of the offices provided under this Agreement.

H. The use of combustible chemicals for painting, welding, or other repairs at the Property by City is strictly prohibited.

I. City shall not exercise any right granted herein in a manner which unreasonably interferes with the lawful use of the Property by County or others.

J. City shall permit County's authorized agents free access to City's offices provided under this Agreement at all reasonable times for the purpose of inspection or for making improvements or repairs deemed necessary by County.

K. City shall not make or cause to be made any alteration to City's offices provided under this Agreement without the prior written consent of County. County shall maintain City's offices provided under this Agreement in a safe and unobstructed manner, keeping same free of obstacles, debris and hazardous conditions.

L. County may specify different office space(s) to replace any office space(s) previously designated for City's use under this Agreement.

M. County agrees to provide basic janitorial services and access to utilities for City's offices provided under this Agreement.

Section 6. Relocation or Cessation of City's FJC Use.

A. Relocation. The County in its sole discretion may elect to cease operating an FJC at the Property and provide the City with Equivalent Office Space as is provided to the City under this Agreement at an alternate location to be mutually agreed upon by the Parties. "Equivalent Office Space" shall mean office space that is comparable in size, quality and functionality to the office space occupied by the City at the Property. In such instance this Agreement shall remain in effect but shall be administratively updated to memorialize the new location of the FJC.

B. Cessation of City Use. The County in its sole discretion may terminate this Agreement and end the City's use of the FJC by either: (i) ceasing to operate an FJC at the Property and not providing the City with equivalent office space pursuant to Section 6(A) above, or (ii) ending the City's use of the FJC for any or no reason. The County shall provide the City with at least 60 days' written notice before making either election in which case the County shall, as applicable: (i) sell the Property and pay the City an amount equal to 20 percent of the Property's sales proceeds; or (ii) if the Property is not sold, pay the City an amount equal to

20 percent of the then-fair market value of the Property as determined by a licensed appraiser to be chosen upon the mutual agreement of the Parties. This Section 6(B) shall not apply if the County terminates this Agreement for cause pursuant to Section 15 below.

Section 7. City's Support of FJC's Mission. While this Agreement remains in effect, the City agrees to support the mission of the FJC by:

A. Maintaining a presence of sworn personnel assigned to the OPD's Domestic Violence and Sexual Assault Units at the FJC.

B. Maintaining OPD's partnership with the FJC in good standing.

C. Maintaining OPD's membership on the Multi-Disciplinary Interview Center Steering Committee in good standing.

D. Providing County with regular reports showing that City's support for the mission of the FJC has provided benefits to those clients that the FJC seeks to serve. County shall be the sole judge or whether or not the services provided by City are actually providing the benefits claimed by City.

Section 8. Relationship of Parties. Nothing in this Agreement shall be interpreted or understood by either of the Parties, or by any third persons, as creating the relationship of employer and employee, principal and agent, limited or general partnership, or joint venture between the County and City or the City's agents, employees or contractors regarding the subject matter hereof. The County shall be solely responsible for its own acts and those of its agents and employees regarding the acquisition, development and operation of the FJC.

Section 9. Defense and Indemnification.

A. The County agrees to indemnify, protect, hold harmless and defend (by counsel satisfactory to the City) the City, City Councilmembers, and other City officials, employees and agents, from and against any and all third-party suits, actions, claims, causes of action, costs, demands, judgments and liens arising out of or related to this Agreement including but not limited to the County's acquisition, development, operation, and use of the FJC, except to the extent caused by the City's breach of its obligations under this Agreement or its sole active negligence or willful misconduct.

B. The City agrees to indemnify, protect, hold harmless and defend (by counsel satisfactory to the County) the County, County Supervisors, and other County officials, employees and agents, from and against any and all third-party suits, actions, claims, causes of action, costs, demands, judgments and liens arising out of or related

to the City's use of the FJC, except to the extent caused by the County's breach of its obligations under this Agreement or its sole active negligence or willful misconduct.

Section 10. Insurance.

A. City, at its sole cost and expense, will obtain and maintain in full force during the term of this contract the following types of insurance:

1. Commercial General Liability "occurrence" coverage in the minimum amount of $1,000,000 combined single limit (CSL) bodily injury & property damage each occurrence and $2,000,000 aggregate, including personal injury, broad form property damage, products/completed operations, and broad form blanket contractual.

2. Workers' Compensation coverage, in full compliance with California statutory requirements, for all employees of City and Employer's Liability in the minimum amount of $1,000,000.

B. All insurance required will be primary coverage as respects County and any insurance or self-insurance maintained by County will be excess of City's insurance coverage and will not contribute to it.

C. County is to be notified immediately if any aggregate insurance limit is exceeded. Additional coverage must be purchased to meet requirements.

D. The County of Ventura, its Board, agencies, departments, districts, officers, employees, agents, and volunteers are to be named as Additional Insured as respects work done by City under the terms of this contract on all policies required (except Workers' Compensation).

E. City agrees to waive all rights of subrogation against the County of Ventura, its boards, agencies, departments, districts, officers, employees, agents and volunteers for losses arising from work performed by City under the terms of this contract as it pertains to Workers' Compensation.

F. Policies will not be canceled, non-renewed or reduced in scope of coverage until after sixty (60) days written notice has been given to the County's, Risk Management Division.

G. City agrees to provide County with the following insurance documents on or before the effective date of this contract:

1. Certificates of Insurance for all required coverage.

2. Additional Insured endorsements.

Waiver of Subrogation endorsements (a.k.a.: Waiver of Transfer Rights of Recovery Against Others, Waiver of Our Right to Recover from Others) as it pertains to Workers' Compensation.

Section 11. Notices. Formal notices between the County and City shall be sufficiently given if and shall not be deemed given unless dispatched by registered or certified mail, postage prepaid, return receipt requested, or delivered by express delivery service, return receipt requested, or delivered personally, to the principal office of the County and City as follows:

County:	City:
County of Ventura	City of Oxnard
Ventura County District Attorney	City Manager's Office
Attn: Michael Jump, Chief Deputy D.A.	Attn: Alexander Nguyen, City Manager
800 S. Victoria Ave., Suite 314	300 West Third Street, 4th Floor
Ventura, CA 93009	Oxnard, CA 93030
(805) 654-3656 (TEL)	(805) 385-7430 (TEL)

Such written notices, demands and communications may be sent in the same manner to such other addresses as the affected party may from time to time designate by mail as provided in this Section. Receipt shall be deemed to have occurred on the date shown on a written receipt for delivery or refusal of delivery.

Section 12. Amendments. No amendment, alteration or variation of the terms or conditions of this Agreement shall be valid unless agreed to in writing by the parties.

Section 13. Entire Understanding of the Parties. This Agreement constitutes the entire understanding and agreement of the Parties with respect to all matters stated herein. If any provision of this Agreement shall be determined to be void by any court of competent jurisdiction, then such determination shall not affect any other provision of this Agreement and all such other provisions shall remain in full force and effect.

Section 14. Multiple Originals; Counterpart. This Agreement may be executed in multiple originals, each of which is deemed to be an original, and may be signed in counterparts.

Section 15. Dispute Resolution; Termination for Cause. If the Parties have a dispute that they are unable to resolve at the staff level, either Party may escalate the dispute to the executive staff level (i.e., to the City Manager and the County Executive Officer) by submitting a signed and dated request for dispute resolution. If the City Manager and the County Executive Officer are unable to resolve the dispute, the item in dispute may be presented to the City Council and the County Board of Supervisors for resolution. If the dispute remains unresolved after that step, a Party may terminate this Agreement for cause if the other Party has materially breached the Agreement and failed to cure

the breach after having been provided a reasonable opportunity to do so. Venue for judicial proceedings involving a dispute over this Agreement shall be the Ventura County Superior Court. In the event the City terminates this Agreement for cause pursuant to this Section 15, the County shall pay the City an amount equal to 20 percent of the then-fair market value of the Property as determined by a licensed appraiser to be chosen upon the mutual agreement of the Parties, in addition to any other damages owed to the City.

IN WITNESS WHEREOF, this Agreement is made by and between County and City as of the Effective Date.

County of Ventura	City of Oxnard
_____	_____
Authorized Signature	Authorized Signature
_____	_____
Printed Name	Printed Name
_____	_____
Title	Title

ATTEST

_____

Rose Chaparro, City Clerk

APPROVED AS TO FORM

_____

Stephen M. Fischer, City Attorney

Approval of a Funding Agreement between the City and the County of Ventura for the New Family Justice Center in Oxnard

City Council, September 19, 2023

Adam Smith, Project Manager
City Manager's Office

CITY OF OXNARD CALIFORNIA

RECOMMENDATION

That the City Council:

1. Adopt a Resolution authorizing the Mayor to execute a Funding Agreement with the County of Ventura for $2,000,000 for the purchase of the building located at 554-555 South A Street for the Oxnard Family Justice Center; and

2. Authorize the City Manager or designee to execute the necessary actions to effectuate the transfer of funds.

BACKGROUND

3

- Currently, Ventura County's (County) sole Family Justice Center (FJC) is located in the City of Ventura
- The FJC serves roughly 2,500 crime victims per year
- The largest proportion of victims served at the FJC are residents of Oxnard
- Oxnard residents must travel to Ventura to receive services

BACKGROUND

4

- On June 6, 2023, the Ventura County Board of Supervisors approved the purchase of a building located at 545-555 South A Street in Oxnard (Property)
- The FJC will emphasize helping underserved victims in Oxnard and the surrounding unincorporated areas
- The County, as the owner of the Property, will be running the day-to-day operation of the FJC

BACKGROUND

5

- About 36% of the Property is unoccupied and will be the focus of improvements to house the FJC's initial operations
- The remaining 64% of the Property's square footage is currently occupied either by non-profit community-based organizations through leases
- The County has confirmed that the seven leases will be honored for the duration of their terms, with negotiations to ensue as to renewals, if any
- Therefore, it is contemplated that the FJC's operational footprint within the Property will increase over time

CITY OPERATIONS

6

- Although the County owns the Property and is responsible for running the facility's day-to-day operations, the Oxnard Police Department (Oxnard PD) will have a permanent presence inside the Property
- Among the items Oxnard PD will require as part of the Funding Agreement are lockable offices, interview rooms, security features for the building, and office furnishings

FINANCIAL IMPACT

7

- The $2,000,000 in funding was previously appropriated for the Family Justice Center by City Council on March 29, 2022, using American Rescue Plan Act (ARPA) funding identified as replacing lost public sector revenue

RECOMMENDATION

8

That the City Council:

1. Adopt a Resolution authorizing the Mayor to execute a Funding Agreement with the County of Ventura for $2,000,000 for the purchase of the building located at 554-555 South A Street for the Oxnard Family Justice Center; and

2. Authorize the City Manager or designee to execute the necessary actions to effectuate the transfer of funds.

CITY OF
OXNARD
CALIFORNIA

THE END