Written materials relating to an item on this agenda that are distributed to the legislative bodies within 72 hours before the item is to be considered at its regularly scheduled meeting will be made available for public inspection at the City Clerk's Office, 300 West Third Street 4th Floor during customary business hours. Agenda reports are also on the City of Oxnard web site at www.oxnard.org.

CITY OF OXNARD CALIFORNIA

AGENDA
OXNARD CITY COUNCIL
OXNARD COMMUNITY DEVELOPMENT COMMISSION SUCCESSOR AGENCY
OXNARD FINANCING AUTHORITY
OXNARD HOUSING AUTHORITY

Meeting Location: Council Chambers, 305 West Third Street

November 21, 2023

Closed Session - 4:45 PM

Appointment Items - 5:30 PM

Regular Meeting - 6:00 PM

Zoom details to call-in for public comment during a meeting:

1. Dial Phone Number: (888) 475-4499
2. Enter Meeting ID: 869 8194 4265
3. Passcode: 688900

If you wish to speak during public comments or a particular item on the agenda, please sign-on by following the zoom call-in steps listed above. Once the presiding officer calls for public speakers, press *9 to raise your hand to inform the City Clerk you would like to speak during the public speaking section for that particular item on the agenda, while in the zoom waiting room. Press *6 when asked to unmute. Listen to the instructions provided virtually on the phone while on hold in the zoom waiting room. Please note that there is a slight time delay when viewing the meeting via television.

IN ACCORDANCE WITH ASSEMBLY BILL 2449, MEMBERS OF THE LEGISLATIVE BODY MAY MEET IN-PERSON OR REMOTELY. TO PARTICIPATE REMOTELY VISIT WWW.OXNARD.ORG.

To find out how you may provide public comment, please refer to the instructions below or at **www.https://www.oxnard.org/city-meetings/**.

The public may view the meeting from home on Spectrum channel 10, Frontier channel 35, or YouTube at Youtube.com/oxnardnews. Video recordings of the meeting are typically available online following the meeting at the City's website at www.oxnard.org/city-meetings.

*Please see the link for the Measure M pre-recorded presentation video for each item listed on this agenda.

YOU MAY PARTICIPATE IN THE MEETING IN THE FOLLOWING WAYS:

1. ATTEND THE MEETING AT THE LOCATION LISTED ABOVE: Submit a speaker card to the City Clerk.

2. EMAIL COMMENTS OR SIGN UP TO SPEAK REMOTELY BEFORE THE MEETING

   a. Submit a request to speak remotely by 3 p.m. on the day of the meeting by using the form available at **www.oxnard.org/citymeetings**.
   b. Submit an email to **cityclerk@oxnard.org** by 3 p.m. on the day of the meeting (indicate the agenda item number in the subject line). All email correspondence will be forwarded to the legislative body prior to the start of the meeting and made part of the legislative record.

In compliance with the Americans with Disabilities Act, if you require special assistance to participate in a meeting, please contact the City Clerk's Office at 385-7803. Notice at least 72 hours prior to the meeting will enable the City to reasonably arrange for your accessibility to the meeting.

Agenda Item Time Estimates include: (Minutes for Presentation + Council Discussion + Public Comment)

c. Contact the City Clerk's Office at (805) 385-7803 to submit your request.

3. PROVIDE PUBLIC COMMENT REMOTELY DURING THE MEETING

a. Follow Zoom details listed above.
b. Public comments on agenda items will be taken following the announcement of the item. After the item is announced, members of the public may register or otherwise be recognized for the purpose of providing public comment.

Please review the Zoom instructions on the registration page to help ensure there are no technical difficulties during your comments and help you understand public comment procedures using Zoom. Detailed participation instructions can be found at www.oxnard.org/city-meetings.

In the event of a disruption which prevents a legislative body of the City of Oxnard from broadcasting a meeting using a call-in option or internet-based service option, or in the event of a disruption within the City's control which prevents members of the public from offering public comment using the call-in option or internet-based service option, the legislative body shall take no further action on items appearing on a meeting agenda until public access to the meeting via the call-in option or internet-based service option is restored. However, if any of the broadcast options are disrupted, but any of the other broadcast options is still available to the public, the legislative body may take further action on items appearing on a meeting agenda without waiting for the disrupted broadcast option(s) to be restored.

A. ROLL CALL, POSTING OF AGENDA
THE FOLLOWING LEGISLATIVE BODIES ARE MEETING: City Council
CONSIDERATION OF TELECONFERENCE PARTICIPATION PURSUANT TO ASSEMBLY BILL 2449

B. PUBLIC COMMENTS ON CLOSED SESSION ITEMS
At this time, a person may address the legislative body only on matters appearing on the closed session agenda. The presiding officer shall limit public comments to three minutes.

C. CLOSED SESSION (4:45 PM)

1. CONFERENCE WITH LEGAL COUNSEL - EXISTING LITIGATION (Government Code section 54956.9(d)(1)).
Name of case: City of Camden, et al. v. 3M Company United States District Court
Case No. 2:23-cv-03147-RMG
Legislative Body: City Council

2. CONFERENCE WITH LEGAL COUNSEL - EXISTING LITIGATION (Government Code section 54956.9(d)(1)).
Name of case: City of Camden, et al. v. E.I. DuPont de Nemours and Company, et al. United States District Court
Case No. 2:23-cv-03230-RMG
Legislative Body: City Council

D. APPOINTMENT ITEMS (5:30 PM)

1. City Manager Department
SUBJECT: Ventura County Civic Alliance State of the Region Report. (30 minutes)
RECOMMENDATION: That the City Council receive the State of Region Report from the Ventura Civic Alliance.
Legislative Body: City Council
Contact: Alexander Nguyen, (805) 385-7430

E. OPENING CEREMONIES (6:00 PM)

Pledge of allegiance to the flag of the United States.

F. CEREMONIAL ITEMS

1. SUBJECT: Presentation of a Proclamation Designating the Month of November, 2023 as "Family Caregivers Month."

2. SUBJECT: Presentation of a Proclamation Designating December 1, 2023 as "World AIDS Day."

3. SUBJECT: Special Guest from the North Pole.

G. PUBLIC COMMENTS ON ITEMS NOT ON THE AGENDA

A person may address the legislative body only on matters not appearing on the agenda and within the subject matter jurisdiction of the legislative body. Speaker requests shall be submitted as set forth on the first page of this agenda. Speakers are limited to three minutes. After 30 minutes, if all speakers have not had the opportunity to speak, the remaining speakers will be given an opportunity to speak prior to adjournment of the meeting. The legislative body cannot enter into a detailed discussion or take action on any items presented during public comments at this time. Such items may only be referred to the City Manager/Executive Director/Secretary for administrative action or scheduled on a subsequent agenda for discussion. Persons wishing to speak on public hearing items should do so at the time of the hearing.

H. REPORT OF CITY MANAGER/EXECUTIVE DIRECTOR/SECRETARY

The City Manager/Executive Director/Secretary shall report on items of interest to the legislative body occurring since the last meeting. The legislative body cannot enter into detailed discussion or take action on any item presented during this report. Such items may only be referred to the City Manager/Executive Director/Secretary for administrative action or scheduled on a subsequent agenda for discussion.

1. City Manager Department
SUBJECT: Local Government Fun Fact: Homeless Crisis.
RECOMMENDATION: That the Public and City Council receive a City Manager discussion: putting the State of California's Homeless Crisis in Perspective.
Legislative Body: City Council
Contact: Alexander Nguyen, (805) 385-7430

I. CITY COUNCIL/HOUSING AUTHORITY/SUCCESSOR AGENCY/FINANCING AUTHORITY BUSINESS/COMMITTEE REPORTS

At this time, a member of the legislative body may make a brief announcement, or make a brief report on his or her activities. Further, members of the legislative body may request to schedule consideration of whether to place an item on a future agenda. The legislative body cannot enter into detailed discussion or take action on any item presented during this report. The member's report shall not exceed three minutes, unless additional time is granted by the presiding officer.

J. REVIEW OF INFORMATION/CONSENT AGENDA

The members of the legislative body will consider whether to remove Information/Consent Agenda items for discussion later during the meeting.

K. PUBLIC COMMENTS ON INFORMATION/CONSENT AGENDA

At this time, a person may address the legislative body only on matters appearing on the information/consent agenda. The presiding officer shall limit public comments to three minutes.

L. INFORMATION/CONSENT AGENDA

1. City Clerk Department
SUBJECT: Approval of Minutes.
RECOMMENDATION: That the City Council approve the minutes of October 17, 2023, regular meetings as presented.
Legislative Body: City Council
Contact: Dee Lai, (805) 385-8200

2. Public Works Department
SUBJECT: Purchase Order with Rush Truck Centers for a Vacuum Truck for the Wastewater Division.
RECOMMENDATION: That the City Council approve and authorize the City Manager to execute a Purchase Order with Rush Truck Centers in the amount of $471,762.84 for the purchase of a vacuum truck for the Wastewater Division.

(Public Works and Transportation Committee approved 3-0 on October 24, 2023)
Legislative Body: City Council
Contact: Michael Wolfe, (805) 385-8055

3. Fire Department
SUBJECT: Authorize reappropriation of budgeted Measure O Funds in the amount of $102,000 to fund the replacement of a breathing air compressor at Fire Station One
RECOMMENDATION: That the City Council approve reappropriating a portion of funds ($102,000) budgeted for grant matches in Fiscal Year 2023-24 Measure O Fund (Fund 104) and the corresponding Capital Outlay Fund (301) to instead, utilize those funds to replace a 20-year-old breathing air compressor used in refilling firefighter self-contained breathing apparatuses (SCBA).

(This item did not originate in Committee.)
Legislative Body: The City Council
Contact: Alexander Hamilton, (805) 385-7700

4. City Attorney Department
SUBJECT: Ordinance of the City Council Prohibiting Single-Use Plastic Foodware
RECOMMENDATION: That the City Council adopt the Ordinance No. 3033 entitled: "Ordinance of the City Council of the City of Oxnard, California Amending Article XXIV of Chapter 7 of the Oxnard City Code Prohibiting the Use and Distribution of Single-Use Plastic Foodware."

(This item is exempt from CEQA pursuant to Title 14 of the California Rules of Regulation section 15061(b)(3))

(Public Works and Transportation Committee approved 3-0)
Legislative Body: City Council
Contact: Stephen Fischer, (805) 385-7483

M. REPORTS

1. Community Development Department
SUBJECT: Commercial Cannabis Financial Auditing Services Agreement with Avenu Insights & Analytics, LLC (10 minutes).
RECOMMENDATION: That the City Council approve and authorize the Mayor to execute a 3-year

agreement (with an option for two 1-year extensions) (Agreement No. 3240018) with Avenu Insights & Analytics, LLC. ("Avenu"), in an amount not to exceed $570,000 for commercial cannabis financial auditing services.

(The Finance and Governance Committee approved 2-0 (Council member Basua absent) on October 24, 2023 to approve the staff recommendation and to forward the item for Council approval.)

Please click the following link to view the required Measure M pre-recorded presentation video: https://youtu.be/qFoNxUzFZ4A
Legislative Body: City Council
Contact: Jeff Pengilley, (805) 385-8208

2. Community Development Department
SUBJECT: Revision to the Planning Commission Rules and Procedures (Bylaws) (20 minutes)
RECOMMENDATION: That the City Council approve a Resolution adopting proposed revisions to the Planning Commission Rules and Procedures (Bylaws) with staff's recommended changes.

(The Finance & Governance Committee approved 2-0 (Council Member Basua absent) on October 24, 2023 to approve the staff recommendation and to forward the item for Council approval.)

Please click the following link to view the required Measure M pre-recorded presentation video: https://youtu.be/YZQEF_GXtXg
Legislative Body: City Council
Contact: Jeff Pengilley, (805) 385-8208

N. ADJOURNMENT

CITY COUNCIL AGENDA REPORT

INFORMATION/CONSENT AGENDA
AGENDA ITEM NO. L.1

DATE: November 21, 2023

TO: City Council

FROM: Dee Lai, Assistant City Clerk, (805) 385-8200, dee.lai@oxnard.org

SUBJECT: Approval of Minutes.

RECOMMENDATION

That the City Council approve the minutes of October 17, 2023, regular meetings as presented.

BACKGROUND

Approval of Minutes.

STRATEGIC PRIORITIES

This agenda item is a routine operational item or does not relate to the five strategic priorities adopted by City Council on March 16, 2021.

FINANCIAL IMPACT

There is no financial impact.

COMMITTEE OUTCOME

This item did not originate in Committee.

Prepared by: Dee Lai, Assistant City Clerk

ATTACHMENTS

1. 10 17 2023 Council Minutes

MINUTES
OXNARD CITY COUNCIL
Regular Meeting
October 17, 2023

A. ROLL CALL, POSTING OF AGENDA

At 4:30 p.m., Mayor John C. Zaragoza called to order the regular meeting of the Oxnard City Council, in the City Hall Council Chambers at 305 W. Third Street, Oxnard, California. Dee Lai, Assistant City Clerk called the roll and announced the posting of the agenda. Councilmembers Gabriela Basua, Councilmember Oscar Madrigal; Bert E. Perello, Gabriel (Gabe) Teran, Mayor Pro Tem Bryan A. MacDonald, and Mayor John C. Zaragoza were present.

Councilmember Valenzuela Zavala was absent. Councilwoman Basua arrived at 4:45 p.m.

THE FOLLOWING LEGISLATIVE BODIES ARE MEETING: City Council
CONSIDERATION OF TELECONFERENCE PARTICIPATION PURSUANT TO ASSEMBLY BILL 2449

B. PUBLIC COMMENTS ON CLOSED SESSION ITEMS

No public comments were received.

C. CLOSED SESSION (4:30 PM)

1. CONFERENCE WITH LEGAL COUNSEL – ANTICIPATED LITIGATION (Government Code section 54956.9(d)(2))
   Based on existing facts and circumstances, there is significant exposure to litigation against the City in two potential cases.
   Legislative Body: City Council

2. CONFERENCE WITH LEGAL COUNSEL — EXISTING LITIGATION (Government Code Section 54956.9(d)(1))
   Name of case: *City of Oxnard v. Rio School District; et al.*
   Ventura County Superior Court Case No. 56-2023-00575575-CU-WM-VTA
   Legislative Body: City Council

At 4:32 p.m., the City Council recessed into a closed session. At 5:59 p.m., the City Council reconvened in an open session in the Council Chambers. Stephen Fischer, City Attorney, announced that for closed session item C.2, the council approved the settlement entitled City of Oxnard versus Rio School District by a vote of 5-0. Mayor Zaragoza, Mayor Pro Tem MacDonald, Councilmember Perello, Councilmember Madrigal, and Councilwoman Basua voted in favor. Councilmember Teran recused himself due to his professional working relationship with the school district. Councilmember Valenzuela Zavala was absent. Under the terms of the settlement, the Rio School District will prepare an appropriate supplemental environmental review of its project to expand the Rio Del Valle Middle School under a modified project description, including a requirement that the northern 10-acre parcel remain agricultural for the duration of the existing Save Open Space and agricultural resources restrictions.

D. OPENING CEREMONIES (6:00 PM)

Mayor Zaragoza led the pledge of allegiance followed by a moment of silence.

E. CEREMONIAL ITEMS

1. SUBJECT: Presentation of a Proclamation Designating the Month of October, 2023 as "Domestic Violence Awareness Month."

Mayor Zaragoza read the Proclamation and delivered it to Dale McAlpine, Police Sergeant. Dale McAlpine and staff joined the Council on the dais to accept the Proclamation, thanked the Council, and spoke briefly.

No public comments were received.

F. PUBLIC COMMENTS ON ITEMS NOT ON THE AGENDA

Public comments were received from Paul Sanaston, Mechael Wright-Hodges, Gary Davis, and Karla Alejandra.

G. REPORT OF CITY MANAGER/EXECUTIVE DIRECTOR/SECRETARY

1. City Manager Department
SUBJECT: Local Government Fun Fact: Investments in South Oxnard.
RECOMMENDATION: That the Public and City Council receive a City Manager discussion about Oxnard's investments in south Oxnard in recent years.

Alex Nguyen, City Manager, provided summary of investments and projects in South Oxnard.

Public comments were received by Carolina Magana, Sofia Vega, Carlos Quiroz, Manuel Herrera, and Deirdre Frank.

H. CITY COUNCIL/HOUSING AUTHORITY/SUCCESSOR AGENCY/FINANCING AUTHORITY BUSINESS/COMMITTEE REPORTS

The members of the Council provided brief announcements regarding their various activities.

Public comment was received from Mandy Torres.

I. REVIEW OF INFORMATION/CONSENT AGENDA

Items K-1 through K.7 were discussed among the Council and staff.

J. PUBLIC COMMENTS ON INFORMATION/CONSENT AGENDA

No public comments were received.

K. INFORMATION/CONSENT AGENDA

1. City Clerk Department
SUBJECT: Approval of Minutes.
RECOMMENDATION: That the City Council approve the minutes of September 19, 2023, regular meetings as presented.

2. Community Development Department
SUBJECT: Adoption of Ord. No. 3032 - Planning & Zoning (PZ) Permit No. 23-580-02: Zoning Text Amendments (ZTA) to the existing regulation of commercial cannabis manufacturing, distribution, testing, and retail dispensaries and creation of indoor commercial cannabis cultivation regulations.
RECOMMENDATION: That the City Council adopt **Ordinance No. 3032** amending Chapters 11 and 16 of the Oxnard City Code pertaining to regulation of cannabis manufacturing, distribution, testing, and retail dispensaries; and amending Oxnard City Code Chapters 11 and 16 to allow up to

five (5) indoor cannabis cultivators and eight (8) identified areas in the City where indoor cannabis cultivation is permitted.

(Council and Council Committee provided feedback in 2020 and 2023, respectively. That feedback and the Committee's 3:0 support of cultivation was incorporated into a draft indoor cultivation ordinance and presented to the Planning Commission for the subject item before the City Council).

3. Public Works Department
SUBJECT: Grant Application Resolution for California Department of Fish and Wildlife Watershed Grants Program.
RECOMMENDATION: That the City Council adopt a **Resolution No. 15,747**:

1. Authorizing the City Manager or designee to submit a grant application to the California Department of Fish and Wildlife for an amount not to exceed $300,000 (no local match) in Watershed Grants Program Funding for the Perkins Road Area Restoration and Enhancement Project;
2. Authorizing the City Manager or designee to execute grant agreements;
3. Authorizing the Finance Director or designee to submit financial reports and grant claims and approve budget appropriations for the use of the grant funds; and
4. Authorizing the Public Works Director or designee to submit non-financial reports.

(This item did not originate in Committee.)

4. City Manager Department
SUBJECT: Resolution Updating Grant Application Procedures.
RECOMMENDATION: That the City Council adopt a **Resolution No. 15,748** updating procedures to submit grant applications.

(The Finance and Governance Committee approved this item by a vote of 3-0 on September 26, 2023)

5. Public Works Department
SUBJECT: Agreement 32400183 with Black Gold Industries for On-Call Citywide Hazardous and Unknown Waste Identification, Collection, and Disposal Services.
RECOMMENDATION: That the City Council approve and authorize the Mayor to execute an Agreement with Black Gold Industries for citywide known and unknown hazardous waste identification, collection, and disposal services for a total amount not to exceed $500,000, beginning with a one-year term ending October 17, 2024, with the option for two consecutive one-year extensions. If extended, the final term date will be October 17, 2026.

(Public Works and Transportation Committee approved 3-0)

6. Public Works Department
SUBJECT: Amend Department-Wide Contracts and Blanket Purchase Orders for a Not to Exceed Amount Greater than $200,000 Each.

RECOMMENDATION: That the City Council approve and authorize the Purchasing Agent to amend the following:

1. Contract #32400034 with Amazon.com Services LLC for an additional $150,000 for a new not to exceed amount of $350,000 through June 30, 2024;
2. Purchase Order #22400103 with Consolidated Electrical Distributors DBA Royal Industrial Solutions for an additional $100,000 for a new not to exceed amount of $300,000 through June 30, 2024;
3. Contract #32400031 with Famcon Pipe & Supply Inc. for an additional $500,000 for a new not to exceed amount of $700,000 through June 30, 2024;
4. Contract #32400092 with Ferguson Enterprise, LLC for an additional $150,000 for a new not to exceed amount of $350,000 through June 30, 2024;
5. Contract #32400048 with W.W. Grainger, Inc. for an additional $250,000 for a new not to exceed amount of $450,000 through June 30, 2024;
6. Contract #32400033 with Hach Company for an additional $135,000 for a new not to exceed amount of $285,000 through June 30, 2024;
7. Contract #32400050 with Home Depot U.S.A., Inc. for an additional $150,000 for a new not to exceed amount of $350,000 through June 30, 2024;
8. Contract #32400069 with Office Depot, Inc. for an additional $50,000 for a new not to exceed amount of $250,000 through June 30, 2024;
9. Contract #32400045 with Sunbelt Rentals, Inc. for an additional $125,000 for a new not to exceed amount of $325,000 through June 30, 2024;
10. Contract #32400047 with Waxie's Sanitary Supply, Inc. dba Waxie Sanitary Supply for an additional $150,000 for a new not to exceed amount of $350,000 through June 30, 2024; and
11. Contract #32400146 with Vista Paint Corporation for an additional $100,000 for a new not to exceed amount of $300,000 through June 30, 2024.

(Public Works and Transportation Committee approved 3-0)

Consent Items K.1 – K.6

It was moved by Mayor Pro Tem MacDonald, seconded by Councilwoman Basua, to approve the information/consent items as presented. VOTE: Basua, MacDonald, Madrigal, Perello, Teran, and Zaragoza voted in favor; the motion passed 6-0. Councilmember Valenzuela Zavala was absent.

L. REPORTS

1. Housing Department
SUBJECT: Approval of the Downtown Oxnard Improvement Association Annual Work Plan and Budget for Fiscal Year 2023-24. (10 minutes)
RECOMMENDATION: That the City Council approve the Downtown Oxnard Improvement Association annual work plan and budget for fiscal year 2023-24.

(This item did not originate in Committee.)

Emilio Ramirez, Housing Director, was available to answer questions. No public comments were received. Discussion ensued among the council and staff.

It was moved by Councilwoman Basua, seconded by Councilmember Madrigal, to approve the recommended

action as presented. VOTE: Basua, MacDonald, Madrigal, Perello, Teran, and Zaragoza voted in favor; the motion passed 6-0. Councilmember Valenzuela Zavala was absent.

2. Public Works Department
SUBJECT: Update on the Speed Hump Program (15 minutes)
RECOMMENDATION: That the City Council receive and file an update on the Speed Hump Program to include amendments to the Program's eligibility criteria as outlined in this staff report.

(This item did not originate in Committee. This is a continuation of an item approved by Council on October 18, 2022.)

Michael Wolfe, Public Works Director, was available to answer questions. Public comment was received from Dan Pinedo. Discussion ensued among the council and staff.

The report was received and file. No action was taken.

3. Public Works Department
SUBJECT: Public Project Agreement 32400201 with Toro Enterprises, Inc. for Etting Road Sidewalk And Bicycle Lane Improvement Project (Rebid), Specification No. PW 21-34R, State Project No. ATPL-5129(098). (10 minutes)
RECOMMENDATION: That the City Council approve and authorize:

1. A total of $2,864,373.45 in Project funds for the Etting Road Sidewalk And Bicycle Lane Improvement Project (Rebid), Specification No. PW 21-34R (C2005);
2. The Mayor to Execute an Agreement with Toro Enterprises, Inc. in the amount of $2,386,979.45 for the Project;
3. A Project contingency amount of $238,697 (10%) with Toro Enterprises, Inc. for the Project;
4. A Project allocation amount of $238,697 (10%) for engineering, inspection, survey and project management for the Project; and
5. Budget appropriations of $1,000,000 from the Air Pollution Buydown Fee Fund (360) and $411,147 from the Circulation System Improvement Fees Fund (350) available fund balances for the Project.

(This item did not originate in Committee as this is a capital improvement project specifically listed in the City's Capital Improvement Program budget, which was previously approved by the City Council.)

Michael Wolfe, Public Works Director, was available to answer questions. No public comments were received. Discussion ensued among the council and staff.

It was moved by Councilmember Perello, seconded by Councilwoman Basua, to approve the recommended action as presented. VOTE: Basua, MacDonald, Madrigal, Perello, Teran, and Zaragoza voted in favor; the motion passed 6-0. Councilmember Valenzuela Zavala was absent.

4. City Attorney Department
SUBJECT: Resolution of the City Council of the City of Oxnard Adopting a Conflict Policy and Procurement Procedures for Design-Build Projects (15 minutes).
RECOMMENDATION: That the City Council adopt a **Resolution No. 15,749** entitled:

"A RESOLUTION OF THE CITY COUNCIL OF THE CITY OF OXNARD, CALIFORNIA, ADOPTING A CONFLICT POLICY AND PROCUREMENT PROCEDURES TO ALLOW THE CITY TO USE THE DESIGN-BUILD METHOD FOR CERTAIN ELIGIBLE PUBLIC PROJECTS IN ACCORDANCE WITH PUBLIC CONTRACT CODE SECTIONS 22160 THROUGH 22169."

(As of the date of this City Council agenda being posted, there is not yet an outcome from the October 10, 2023 Public Works and Transportation Committee.)

Michelle McCarron, Assistant City Attorney, was available to answer questions. No public comments were received. Discussion ensued among the council and staff.

It was moved by Councilmember Perello, seconded by Councilmember Teran, to approve the recommended action as presented. VOTE: Basua, MacDonald, Madrigal, Perello, Teran, and Zaragoza voted in favor; the motion passed 6-0. Councilmember Valenzuela Zavala was absent.

M. ADJOURNMENT

There being no further business on the agenda, and without objection, Mayor Zaragoza adjourned the meeting at 8:14 p.m.

DEE LAI
Assistant City Clerk

JOHN C. ZARAGOZA
Mayor

CITY COUNCIL AGENDA REPORT

INFORMATION/CONSENT AGENDA
AGENDA ITEM NO. L.2

DATE: November 21, 2023

TO: City Council

FROM: Michael Wolfe, Public Works Director, (805) 385-8055, michael.wolfe@oxnard.org

SUBJECT: Purchase Order with Rush Truck Centers for a Vacuum Truck for the Wastewater Division.

RECOMMENDATION

That the City Council approve and authorize the City Manager to execute a Purchase Order with Rush Truck Centers in the amount of $471,762.84 for the purchase of a vacuum truck for the Wastewater Division.

(Public Works and Transportation Committee approved 3-0 on October 24, 2023)

BACKGROUND

The Wastewater Division desires to replace vehicle 3698, a 2003 International model 7400 vacuum truck with over 20 years of use. The truck is equipped with a storage tank and pump sized to pump out deep sewer lift station wet wells and is vital during lift station failures and power outages. In addition to responding to emergencies, the vehicle is also used for vault cleaning, underground utility cleaning, wastewater plant maintenance and sewage spill cleanup.

This type of vehicle requires regular DOT inspections to maintain the certification required to be functionally safe and reliable. The last two annual inspections have shown the tank portion of vehicle 3698 is in need of costly repairs to maintain certification. Furthermore, this vehicle is past its useful life and has required increasingly costly repairs to keep it road-worthy. The vehicle is regularly exposed to harsh environments, which has deteriorated the mechanical components and rendered it unreliable. Vehicle 3698 has reached a point where maintenance costs have escalated significantly. Regular repairs, spare parts, and downtime due to breakdowns puts the Division's ability to respond promptly to emergencies at risk.

DISCUSSION

The Wastewater Division recommends replacing vehicle 3698 with a 2024 Peterbilt Model 567 Diesel Truck with a Thompson Tank attachment. This vacuum truck is equipped with improved technology and suction capabilities that enable faster and more efficient wastewater operation. Vehicle 3698 lacks these features, resulting in longer operational times and increased labor costs. The reliability of our wastewater operations is critical to maintaining public health and safety. An aging truck is more prone to breakdowns, which can lead to service interruptions and potential health hazards.

Rush Truck Centers is an authorized participating dealer of Peterbilt Motors Company for the California region. The City of Oxnard can take advantage of the Sourcewell cooperative agreement 060920-PMC to receive a 25% discount off the list price for the model 567 truck. The lead time for this purchase is 7 months upon Rush Truck Centers' receipt of the City's Purchase Order.

STRATEGIC PRIORITIES

This agenda item supports the Infrastructure and Natural Resources strategy. The purpose of the Infrastructure and Natural Resources strategy is to preserve and improve our roads, utilities, parks, trees, water supply and natural resources through effective planning, prioritization, and an equitable and efficient use of available funding.

FINANCIAL IMPACT

The total cost of this Purchase Order with Rush Truck centers shall not exceed $471,762.84. This purchase was included in the Council-approved FY 2023-24 Wastewater operating budget (Operations Fund 6113615-56040). There are sufficient funds in the account to fund this purchase.

Equipment	Account	Cost
Vacuum Truck	6113615-56040	$471,762.84

COMMITTEE OUTCOME

The Public Works and Transportation Committee approved 3-0 on October 24, 2023 to approve the staff recommendation and to forward the item for Council approval.

Prepared by: Jan Hauser, Wastewater Division Manager

ATTACHMENTS

1. Quote & Coop Agreement- Vacuum Truck

SW0828231013

Date:	August 28, 2023
To:	**City of Oxnard**
Address:	6001 Perkins Road. Oxnard, CA 93033
Member ID# :	**25781**
Name:	Miguel Diaz
Email:	Miguel.Diaz@Oxnard.org
Phone:	(805) 271-2213
Quote Expire:	December 31, 2023
Sourcewell:	**Contract # 060920-PMC**

Sourcewell Formerly NJPA Awarded Contract

RUSH TRUCK CENTERS

Peterbilt

Rush Truck Centers
8830 E. Slauson Ave. Pico Rivera, CA 90660
Contact: Jeff Quemada Phone: (626) 905-1799
Email: QuemadaJ@RushEnterprises.com

Sourcewell Quote Sheet

DESCRIPTION

2024 Peterbilt 567

Diesel Engine with Allison Transmission

YEAR:	2024	TRANS.:	Allison 4000 RDS-P
MAKE:	Peterbilt	R. AXLE:	40K
MODEL:	567	F. AXLE:	20K
Body Type:	Thompson Tank Model STN 3000-50000	PINTLE HITCH:	None
GVWR:	60,000 lbs	PUSHER AXLE:	None
ENGINE:	Cummins X15 (DIESEL)	Wheels:	Aluminum
H/P:	500 hp @ 1850 ft/lbs torque	FUEL TANKS:	70 Gal Frame Mounted

Model 567 Cab & Chassis		
List Price : (**Per Specifications of Oxnard)**		$285,341.00
Model Sourcewell Discount: (**See Pg. 2**)	25.00%	-$71,335.25
Customer Price		$214,005.75
Sourced Goods		
Thompson MODEL STN - 3000 - 50000 Vacuum-Pressure Unit		$191,961.90
Manuals - (Custom Maintinance/Parts Book/Engine/Transmisson)		$1,250.00
Cab blow out Auxiliary hose		$98.00
Total		$193,309.90
Dealer Fees / Services		
Upfit and Accessories Prod. Flooring Plan at $43 per day for 188 days		$8,084.00
Chassis Engineering Frame Layout		$1,500.00
Additional Keys with Identification (5 Sets)		$95.00
Weight slip certification w/ road test and fuel Filled full		$465.10
Factory - Do Not Drive		$750.00
Quality Inspection service report & Wash detail		$1,450.00
Transport Move - TT to Nixon		$211.00
Transport Move - Nixon to RTC LA		$211.00
Transport Delivery - RTC LA to Oxnard		$1,000.00
Total		$13,766.10
Model 567 Cab & Chassis		$214,005.75
Sourced goods		$193,309.90
Dealer Fees / Services		$13,766.10
Taxable Fees (Document Fee, Admin Fee)		$330.00
Total		$421,411.75
Sales Tax (9.25%)		$38,980.59
Admin Process - (License/Title/Reg Exempt/Electronic Filing)		$33.00
Required CARB State of Registration - Clean Sticker - TSB#23-66 (See Pg. 8)		$9,000.00
Required Warranties - CARB Emissions 5yr / 350K Miles		$2,320.00
Optional Warranties		$0.00
Tire Recycling Fee		$17.50
Total Price		**$471,762.84**

* 12% Ferderal ExciseTaxes Apply to State/Local Govt who are NOT Exempt *

Peterbilt is excited to announce the following pricing update and extension of the Sourcewell Customer Pricing program for 2023. Sourcewell, formerly NJPA, holds national contracts that offer an easy, time-saving procurement process for all levels of government and education. The discount by model represents the "% Off List" price the customer will pay when ordering units on the Sourcewell program.

Sourcewell Formerly NJPA

Sourcewell Customer Pricing CY2021-2024

Peterbilt

Peterbilt Motors Company Contract #060920-PMC **September 1, 2022 REVISION**

Model	Model 220	Model 220EV	Model 535	Model 536	Model 537	Model 548		
Average List Price	$105,000	$367,900	$103,900	$122,500	$131,900	$157,600		
CY2021-2024 Sourcewell DISCOUNT	5%	5%	15%	15%	15%	15%		
Estimated Sourcewell Customer Price	$99,750	$349,505	$88,315	$104,125	$112,115	$133,960		

Model	Model 365	Model 367	Model 567	Model 579	Model 579EV	Model 389	Model 520	Model 520EV
Average List Price	$214,100	$279,800	$255,200	$257,200	$662,700	$275,600	$269,200	$690,300
CY2021-2024 Sourcewell DISCOUNT	25%	25%	25%	25%	25%	25%	25%	25%
Estimated Sourcewell Customer Price	$160,575	$209,850	$191,400	$192,900	$497,025	$206,700	$201,900	$517,725

*Customer price includes cab & chassis, factory-freight, Pre-Delivery-Inspection (PDI), marketing fee, and dealer profit.

*Customer price does not include any flooring/interest charges, any applicable taxes (i.e. FET), and any components/services provided by the Peterbilt dealer after delivery from Peterbilt factory (i.e. body, manuals, training, doc fees, local-delivery, additional fuel/def, extended coverages, etc.)

- Due to global supply chain cost increases, all trucks are subject to a commodity surcharge of up to 10% of truck (cab & chassis) price (List price less Sourcewell Discount)
- All orders must be submitted at current price level. Current price level is 1/1/23. Note, this might change for second half of 2023.
- Canadian Peterbilt Dealers have the option to order chassis in Canadian or US Dollars.

Sourcewell
Formerly NJPA

Peterbilt

SOURCE**WELL** PARTICIPATING DEALER AGREEMENT

PETERBILT MOTORS COMPAY CONTRACT #060920-PMC

This Participating Dealer Agreement dated 11/23/20 is between PETERBILT MOTORS COMPANY, an unincorporated division of PACCAR Inc ("Peterbilt"), located in Denton, Texas and the Rush entities listed in the signature block ("Dealer"), with a corporate address at 555 IH35 South, New Braunfels, TX 78130.

WHEREAS Peterbilt has entered into an agreement ("Agreement") with Sourcewell dated November 15,2020 pursuant to which Peterbilt will sell to Sourcewell affiliated government and education agencies through participating Peterbilt dealers certain commercial vehicles subject to the terms and conditions set forth in the Agreement;

WHEREAS Dealer wishes to participate in the sale and service of such commercial vehicles to Source**well** affiliated government and education agencies ("Sourcewell Members") and agrees to be subject to the terms and conditions set forth in the Agreement;

In consideration of the mutual promises set forth herein, Peterbilt and Dealer agree to the following terms and conditions:

1. **Recitals**. The parties agree that the foregoing recitals are true and correct, and are hereby incorporated in and made a part of this agreement.

2. **Adoption of Obligations of Lessor**. Dealer hereby adopts and agrees to be bound by all the terms, conditions, and obligations of the Agreement, the terms and conditions of which are incorporated herein by reference, to the extent under the control of, and applicable to, Dealer as a vehicle dealer for Peterbilt, and solely with respect to the vehicles sold to Sourcewell Members by Dealer. Dealer agrees to assume all rights and obligations of Peterbilt as specified in the Agreement solely for vehicles sold by Dealer to Sourcewell Members. Notwithstanding the foregoing, Peterbilt remains responsible for its obligations under the Agreement under its control and applicable to Peterbilt as the manufacturer of the vehicles, including without limitation, vehicle warranty obligations.

3. **Term**. This Participating Dealer Agreement shall remain effective until terminated by either party upon sixty (60) Days prior written notice.

4. **Pricing and Order Processing**. Dealer agrees that pricing of vehicles to Sourcewell Members shall conform to the not-to-exceed pricing matrix established by Peterbilt, which may be amended from time to time in Peterbilt's sole discretion. Should Dealer charge a sales price in excess of the amount set forth in the pricing matrix at the time an order is placed by a Sourcewell Member, Dealer shall promptly refund the excess of the sales price over the amount set forth in the pricing matrix to the affected Sourcewell Member. Peterbilt shall have sole discretion to determine whether there has been an overcharge based on the applicable pricing matrix in effect at the time of the order. All orders shall include the Sourcewell Sales Code. Dealer shall submit copies of final invoices of all vehicles sold by Dealer to Sourcewell members on a monthly basis.

5. **Indemnity**.

a. Dealer agrees that it will protect, defend, indemnify and hold harmless Peterbilt from any and all losses, claims, suits, costs, damages, expenses and liabilities (including reasonable attorney's fees) arising from Dealer's breach of its obligations under the Agreement or Dealer's negligence, gross negligence, or willful misconduct in connection with this Agreement. Notwithstanding the foregoing, Dealer shall have no obligation or liability under this paragraph 4 with respect to any losses, claims, suits, costs, damages, expenses and liabilities (including reasonable attorney's fees) arising from Peterbilt's negligence, gross negligence, or willful misconduct.

b. Peterbilt agrees that it will protect, defend, indemnify and hold harmless Dealer from any and all losses, claims, suits, costs, damages, expenses and liabilities (including reasonable attorney's fees) arising from Peterbilt's breach of its obligations under the Agreement or Peterbilt's negligence, gross negligence, or willful misconduct in connection with this Dealer Agreement. Notwithstanding the foregoing, Peterbilt shall have no obligation or liability under this paragraph 5.b. with respect to any losses, claims, suits, costs, damages, expenses and liabilities (including reasonable attorney's fees) arising from Dealer's negligence, gross negligence, or willful misconduct.

Sourcewell
Formerly NJPA

Peterbilt

SOURCEWELL PARTICIPATING DEALER AGREEMENT

PETERBILT MOTORS COMPAY CONTRACT #060920-PMC

6. **Non-Exclusivity**. Dealer acknowledges and agrees that Peterbilt will afford, at its sole discretion, other participating dealers, including competitors of Dealer, the opportunity to participate in the sale and service of commercial vehicles to Sourcewell Members.

7. **No Agency**. No agency, partnership, contractor or employment relationship is created by this Agreement. Dealer shall make no representation that Dealer is the agent, partner, employee, or contractor of Peterbilt.

8. **Assignment**. Neither party may assign this Participating Dealer Agreement without the prior written consent of the other.

9. **Limitation of Liability**. Except for the parties indemnification obligations for third party claims, neither party shall be liable to the other for special, indirect, punitive or consequential damages resulting from or arising out of this Participating Dealer Agreement including, without limitation, loss of profit or business interruptions, without regard to the fault or alleged fault of any party.

10. **Entire Agreement and Amendment**. This Participating Dealer Agreement, including the underlying agreement which is incorporated herein by reference, constitutes the entire agreement between the parties concerning the subject matter hereof, and any and all prior agreements and understandings, written and oral, are without effect and superseded by this agreement. The agreement may be amended only by a written instrument signed by both parties.

IN WITNESS WHEREOF, the Parties hereto have signed this Participating Dealer Agreement or have caused same to be duly executed by their authorized signatories, on the date(s) noted below.

Rush Truck Centers of Alabama, Inc.
Rush Truck Centers of Arizona, Inc.
Rush Truck Centers of California, Inc.
Rush Truck Centers of Colorado, Inc.
Rush Truck Centers of Florida, Inc.
Rush Truck Centers of Kentucky, Inc.
Rush Truck Centers of Nevada, Inc.
Rush Truck Centers of New Mexico, Inc.
Rush Truck Centers of Oklahoma, Inc.
Rush Truck Centers of Tennessee, Inc.
Rush Truck Centers of Texas, LP

By: Rushtex, Inc., Its General Partner

Signature: _____

Name: Gary Lane

Title: SVP

Date: 11/23/20

Peterbilt Motors Company

Signature: _____

Name: Joe Curran

Title: National Fleet Sales Manager

Date: 11-23-20

Notice Regarding Security Interest and Payment of Purchase Price

1. BMO Harris Bank N.A. ("Bank") financed or will finance the acquisition of each vehicle that Rush Enterprises, Inc. and its subsidiaries ("Rush") will in turn sell to you on deferred payment terms ("Vehicle"). Bank's agreement with Rush requires that Bank's security interest in each Vehicle continue until Bank receives the full amount that Bank financed for such Vehicle. Based on that agreement, your purchase of a Vehicle will be subject to Bank's prior, unrelinquished security interest, which will continue until Bank receives the total amount that Bank financed for such Vehicle.

2. By written notice to you, Bank may require you to pay the purchase price for Vehicles directly to Bank. If you pay any portion of the purchase price for a Vehicle directly to Bank, Rush will credit such payment(s) against the amount you owe to Rush.

3. Notwithstanding the foregoing, on full payment for a Vehicle, Rush shall ensure that the Vehicle is free and clear of any liens, mortgages, security interests or other encumbrances of third parties, including BMO, and shall pay all amounts necessary to discharge any such encumbrance.

Rush Truck Centers of California, Inc.
dba Rush Truck Centers, Los Angeles

Principals

The Principals of Rush Truck Centers of California, Inc. are:

Name	Title	Address
W.M. "Rusty" Rush	Sole Director, President and CEO	555 IH35 South, Suite 500 New Braunfels, TX 78130
Derrek R. Weaver	VP & Treasurer	"
Michael McRoberts	Secretary	"
Scott Anderson	VP Finance & Insurance	"
Steven L. Keller	Assistant Secretary	"
Michael S. Lyons	Assistant Secretary	"
Hal Meriwether	Regional General Manager	14490 Slover Ave. Fontana, CA 92337
Daniel Perez	General Manager	8830 East Slauson Ave. Pico Rivera, CA 90660

FEDERAL EXCISE TAX
Exemption Certificate
for Use by States & Local Governments
Treas. Reg. 48.4221-5

I hereby certify that I am _____ (title of officer) of the _____ (state or local government) ("Purchaser"), that I am authorized to execute this certificate on behalf of Purchaser, and that:

(check applicable type of certificate)

A. _____the article/articles specified in the accompanying order or below:

Article/Articles (by VIN):

_____ _____

_____ _____

(if more room is needed, attach list of additional articles to this certificate)

OR

B. ___X___ all orders placed by Purchaser for the period commencing January 1, 2023 (date) and ending December 31, 2023 (date) (period not to exceed 12 calendar quarters)

are, or will be, purchased from Rush Truck Centers of California, Inc. ("**Dealer**") for the exclusive use of Purchaser.

Purchaser understands that this statement is made under penalties of perjury.

Purchaser understands that the exemption from tax in the case of sales of articles under this exemption certificate to a State, etc., is limited to the sale of articles purchased for its exclusive use. Purchaser understands that the fraudulent use of this certificate for the purpose of securing this exemption will subject Purchaser and all parties making such fraudulent use of this certificate to a fine of not more than $10,000, or to imprisonment for not more than 5 years, or both, together with costs of prosecution.

PURCHASER

By: _____

Name: _____

Title: _____

DocuSign Envelope ID: 58D06461-93FD-4DAE-B406-F324B80E9ADA

SUBJECT: 2024 CARB & EPA Emissions Update **TSB # 23-66**
DATE: 8-4-23

California Air Resources Board (CARB) & Environmental Protection Agency (EPA) have both updated their requirements for new trucks ordered and built in 2024. The following updates to Emission, Clean Idle, and Surcharge codes are to support the new CARB & EPA requirements. In 2024, both California and Oregon are considered CARB States.

These option code requirements and guidelines are governed by a vehicles State of Registration and the state of operation. Vehicles that will operate in a CARB state have different requirements then vehicles that will operate only in EPA states.

Vehicles that will ***DOT register in an EPA*** state and ***operate only in an EPA*** state, the following EPA rules apply to your order. EPA has developed a new Federal Clean Idle label, Reference TSB 23-65, that will be required on all EPA certified MY24 diesel engines. Vehicles with only an EPA Federal Clean Idle label cannot DOT Register or operate in CARB states. EPA only orders will require an EPA Emission Warranty 5-Year/100,000 Mile and an EPA Engine Idling Compliance label code.

Vehicles that will ***DOT register in an EPA*** state and ***operate in a CARB*** state, the following EPA and CARB rules apply to your order. All new vehicles that will operate in a CARB state will require a CARB Clean Idle label. CARB also requires extended Emission Warranty of 5-years / 350,000 Mile, or 5-Years / 150,000 for PX engines, on all MY2024 vehicles with a CARB Clean Idle label. To operate in a CARB State, orders will need CARB Emission Warranty, CARB Engine Idling Compliance label, and CARB operating Base Warr: Emissions surcharge code. Vehicles with a Cummins diesel engine, that operate in a CARB State, require both an EPA and CARB Engine Idling Compliance label code.

Vehicles that will ***DOT Register in a CARB*** state, the following EPA and CARB rules apply to your order. All new vehicles that will register in a CARB state will require a CARB Clean Idle label. CARB also requires extended Emission Warranty on all MY2024 vehicles with a CARB Clean Idle label. To register in a CARB State, orders will need a CARB Emission Warranty, CARB Engine Idling Compliance label, CARB State of Registration, and a CARB operating Base Warr: Emissions surcharge code. Vehicles with a Cummins diesel engine, that register in a CARB State, will require both an EPA and CARB Engine Idling Compliance label.

Natural Gas engines are excluded from the CARB Engine Idling Compliance requirement and don't require a Clean Idle Label.

Scenario	Warranty	Compliance Label	Surcharge	Certified Clean Idle
MX Engine DOT Registered in EPA State **AND** **DO NOT** Operate in CARB State	2140670 EPA Emission Warranty 5yr/100,000mi	2140700 EPA Engine Idling Compliance Label	**See Surcharge Section of Table Below	
MX Engine DOT Registered in EPA State **AND** **Operate** in CARB State	2140660 CARB Emission Warranty 5yr/350,000mi	2140200 CARB Engine Idling Compliance Label	**See Surcharge Section of Table Below	
MX Engine DOT Registered in CARB State	2140660 CARB Emission Warranty 5yr/350,000mi	2140200 CARB Engine Idling Compliance Label	**See Surcharge Section of Table Below **AND** 9408640 CARB State of Registration	
Scenario	**Warranty**	**Compliance Label**	**Surcharge**	**Certified Clean Idle**
X15 & PX-9/7 Engine DOT Registered in EPA State AND **DO NOT** Operate in CARB State	2140670 EPA Emission Warranty 5yr/100,000mi	2140700 EPA Engine Idling Compliance Label	**See Surcharge Section of Table Below	
X15 & PX-9/7 Engine DOT Registered in EPA State AND **Operate** in CARB State	2140660 CARB Emission Warranty 5yr/350,000mi	2140200 CARB Engine Idling Compliance Label AND 2140700 EPA Engine Idling Compliance Label	**See Surcharge Section of Table Below	
X15 & PX-9/7 Engine DOT Registered in CARB State	2140660 CARB Emission Warranty 5yr/350,000mi	2140200 CARB Engine Idling Compliance Label AND 2140700 EPA Engine Idling Compliance Label	**See Surcharge Section of Table Below AND 9408640 CARB State of Registration	

Orders in the Backlog:

Price protection does not apply. Standard change order policy applies to dealer-initiated changes to orders in the backlog.

	DESCRIPTION	CODE	PRICE
	Available Options		
CARB/EPA Compliant Codes	CARB Emission Warranty	**2140660**	
	EPA Emission Warranty	**2140670**	
Compliance Label	CARB Engine Idling Compliance	**2140200**	
	EPA Engine Idling Compliance	**2140700**	
	CARB and EPA Engine Idling Not Required	**2140220**	
CARB ONLY State	CARB State of Registration	**9408640**	**$9,000**
CARB Operating Surcharge	BASE WARR: EMISSIONS (CARB OPERATION) 5YR/100K MI – L9N	**9408600**	**$3,200**
CARB Operating Surcharge	BASE WARR: EMISSIONS (CARB OPERATION) 5YR/150K MI - PX-9	**9408701**	**$3,966**
	BASE WARR: EMISSIONS (CARB OPERATION) 5YR/150K MI - PX-7	**9408702**	**$2,874**

	BASE WARR: EMISSIONS 5YR/100K MI-EPA ENGINE	**9408703**	**$0**
	BASE WARR: EMISSIONS (CARB OPERATION) 5YR/350K MI - MX < 460HP	**9408704**	**$2,320**
	BASE WARR: EMISSIONS (CARB OPERATION) 5YR/350K MI - MX > 460HP	**9408705**	**$3,495**
	BASE WARR: EMISSIONS (CARB OPERATION) 5YR/350K MI - X15 EFF/PRO	**9408706**	**$5,420**
	BASE WARR: EMISSIONS (CARB OPERATION) 5YR/350K MI - X15 PER/PRO	**9408707**	**$9,195**

SmartSpec® Notes:
See SmartSpec for price, weight, and footnote information.

Contact your Regional Sales Office with any questions.

DocuSign Envelope ID: 58D06461-93FD-4DAE-B406-F324B80E9ADA

SUBJECT: 2024 CARB & EPA Emissions Update **TSB # 23-66**
DATE: 8-4-23

California Air Resources Board (CARB) & Environmental Protection Agency (EPA) have both updated their requirements for new trucks ordered and built in 2024. The following updates to Emission, Clean Idle, and Surcharge codes are to support the new CARB & EPA requirements. In 2024, both California and Oregon are considered CARB States.

These option code requirements and guidelines are governed by a vehicles State of Registration and the state of operation. Vehicles that will operate in a CARB state have different requirements then vehicles that will operate only in EPA states.

Vehicles that will ***DOT register in an EPA*** state and ***operate only in an EPA*** state, the following EPA rules apply to your order. EPA has developed a new Federal Clean Idle label, Reference TSB 23-65, that will be required on all EPA certified MY24 diesel engines. Vehicles with only an EPA Federal Clean Idle label cannot DOT Register or operate in CARB states. EPA only orders will require an EPA Emission Warranty 5-Year/100,000 Mile and an EPA Engine Idling Compliance label code.

Vehicles that will ***DOT register in an EPA*** state and ***operate in a CARB*** state, the following EPA and CARB rules apply to your order. All new vehicles that will operate in a CARB state will require a CARB Clean Idle label. CARB also requires extended Emission Warranty of 5-years / 350,000 Mile, or 5-Years / 150,000 for PX engines, on all MY2024 vehicles with a CARB Clean Idle label. To operate in a CARB State, orders will need CARB Emission Warranty, CARB Engine Idling Compliance label, and CARB operating Base Warr: Emissions surcharge code. Vehicles with a Cummins diesel engine, that operate in a CARB State, require both an EPA and CARB Engine Idling Compliance label code.

Vehicles that will ***DOT Register in a CARB*** state, the following EPA and CARB rules apply to your order. All new vehicles that will register in a CARB state will require a CARB Clean Idle label. CARB also requires extended Emission Warranty on all MY2024 vehicles with a CARB Clean Idle label. To register in a CARB State, orders will need a CARB Emission Warranty, CARB Engine Idling Compliance label, CARB State of Registration, and a CARB operating Base Warr: Emissions surcharge code. Vehicles with a Cummins diesel engine, that register in a CARB State, will require both an EPA and CARB Engine Idling Compliance label.

Natural Gas engines are excluded from the CARB Engine Idling Compliance requirement and don't require a Clean Idle Label.

Rush Pblt Truck Centers (S990)
8830 E Slausen Avenue
Pico Rivera, California 90660

City Of Oxnard
1060 Pacific Avenue Bldg 1
Oxnard, California 93030
United States of America

JEFF QUEMADA
Cell Phone:
Office Phone: (562)566-1800
Email: quemadaj@rushenterprises.com

MIGUEL DIAZ
Cell Phone: 8052712213
Email: miguel.diaz@oxnard.org

Vehicle Summary

Unit	
Model:	Model 567
Type:	Full Truck
Description 1:	567 VACC Truck X15
Description 2:	Update 2024
Application	
Intended Serv.:	Tanker, Liquid Bulk
Commodity:	Hazardous Waste
Body	
Type:	Tank
Length (ft):	19
Height (ft):	9
Max Laden Weight (lbs):	9000
Trailer	
No. of Trailer Axles:	0
Type:	
Length (ft):	0
Height (ft):	0
Kingpin Inset (in):	0
Corner Radius (in):	0
Restrictions	
Length (ft):	40
Width (in):	102
Height (ft):	13.5

Chassis	
Fr Axle Load (lbs):	20000
Rr Axle Load (lbs):	40000
G.C.W. (lbs):	60000
Road Conditions:	
Class A (Highway)	90
Class B (Hwy/Mtn)	10
Class C (Off-Hwy)	0
Class D (Off-Road)	0
Maximum Grade:	6
Wheelbase (in):	236
Overhang (in):	60
Fr Axle to BOC (in):	74.1
Cab to Axle (in):	161.9
Cab to EOF (in):	221.9
Overall Comb. Length (in):	343.23

Special Req.

Approved by: _____ **Date:** _____

Note: All sales are F.O.B. designated plant of manufacture.

HORIZONTAL DIMENSIONS

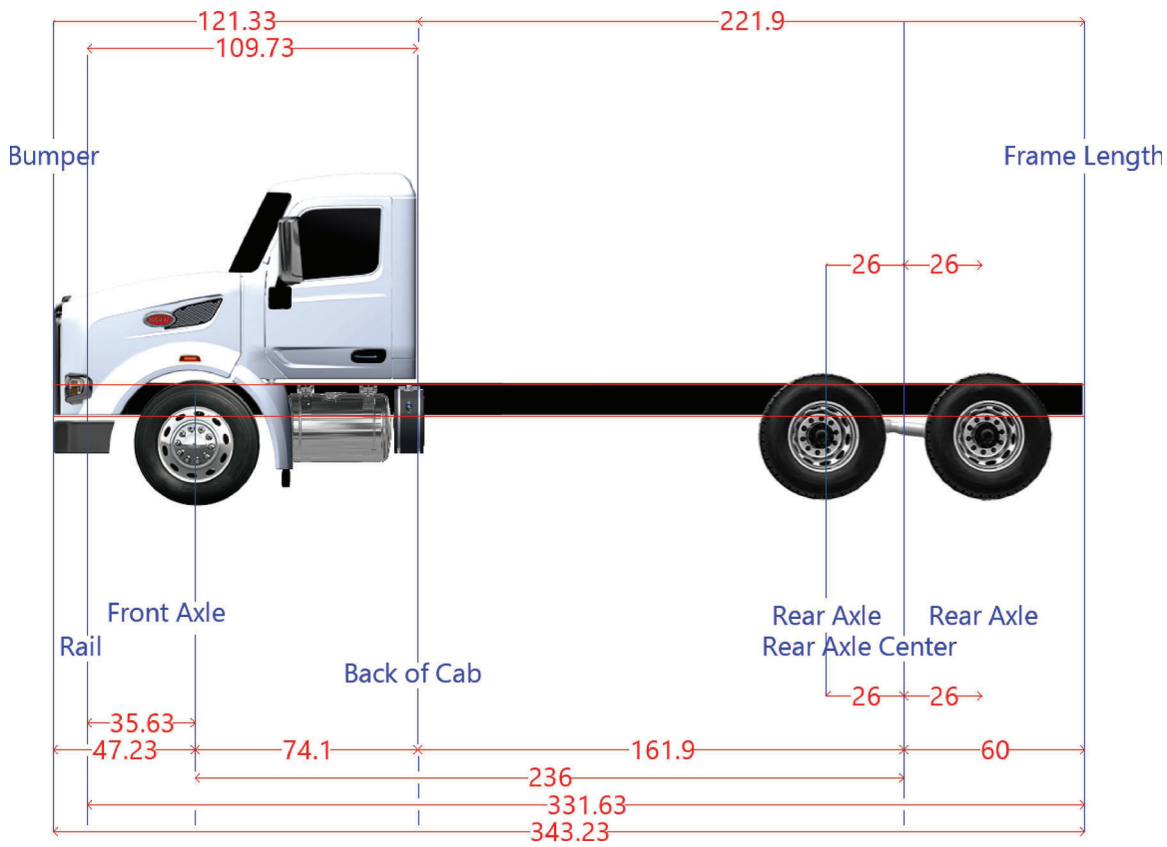

Dimension	Measurement	Start	End
Axle Spacing	52	210	262
Bumper to Back of Cab	121.33	-47.23	74.1
Bumper to Front Axle	47.23	-47.23	0
Bumper to Front Frame	11.6	-47.23	-35.63
Cab to End of Frame	221.9	74.1	296
Cab to Rear Axle	161.9	74.1	236
Effective Bumper to Back Of Cab	121.33	-47.23	74.1
Frame Length	331.63	-35.63	296
Front Axle to Back of Cab	74.1	0	74.1
Front of Frame to Axle	35.63	-35.63	0
Load Space	221.9	74.1	296
Overall Length	343.23	-47.23	296
Overhang	60	236	296
Pusher Offset #1	0	210	236
Pusher Offset #2	0	210	236
Pusher Offset #3	0	210	236
Tag Offset	0	236	262
Wheelbase	236	0	236

Dtpo: Truck Model: 567 Customer: City Of Oxnard

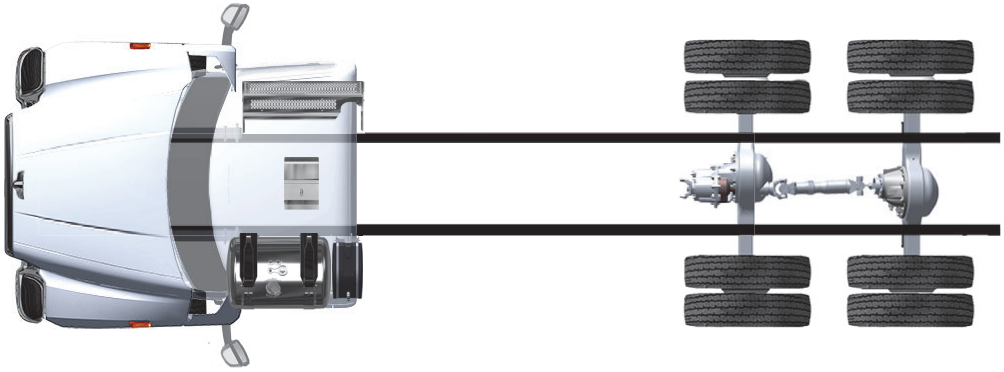

Note: The image displayed is representative only. It should not be construed as a layout diagram. Dimensions and components are not to scale.

Note: The image displayed is representative only. It should not be construed as a layout diagram. Dimensions and components are not to scale.

Note: The image displayed is representative only. It should not be construed as a layout diagram. Dimensions and components are not to scale.

Dtpo: Truck Model: 567 Customer: City Of Oxnard

Selected Options

Sales Option	Description	Width	Side
5554100	26" Aluminum 70 Gallon Fuel Tank L…	26	Left
5655019	DEF Tank Small, HD 14 Gal 2.1M M…	23	Left
6010390	Omit Standard Battery Box	18	Center
6040550	Aftertreatment Aluminum Non-Slip C…	18	Right

Available Space: Left: 106.8 in. Center: 121.8 in. Right: 106.2 in.

7/12/2023, 4:23:03 PM

WEIGHT DISTRIBUTION

Model: 567

Actual performance of a specific unit can be affected by your operating conditions. The performance calculations should only be used as a guideline.

Recommended payload center of gravity to achieve specified ground loads; measured from centerline of drive axles: 54 in. from the centerline of the drive axle(s)."

Weight (lbs)	Front	Rear	Total
Chassis	11095	6628	17723
Tools/Driver	307	68	375
Fuel & DEF	474	131	605
Max Payload	8125	27172	35297
Auxiliary Payload	0	0	0
Total	20000	34000	54000
Specify Ground Load	20000	34000	

Auxiliary Payload

Item	Location from FA CL	Weight	Point Description
Load Point #1	0	0	
Load Point #2	0	0	
Load Point #3	0	0	
Component(s)	-	0	Composite Totals

Fifth wheel slide length is **0** inches
Selected rearmost setting is **0** inches
Wheelbase measurement: **236** inches
Overhang measurement: **60** inches

TURNING RADIUS

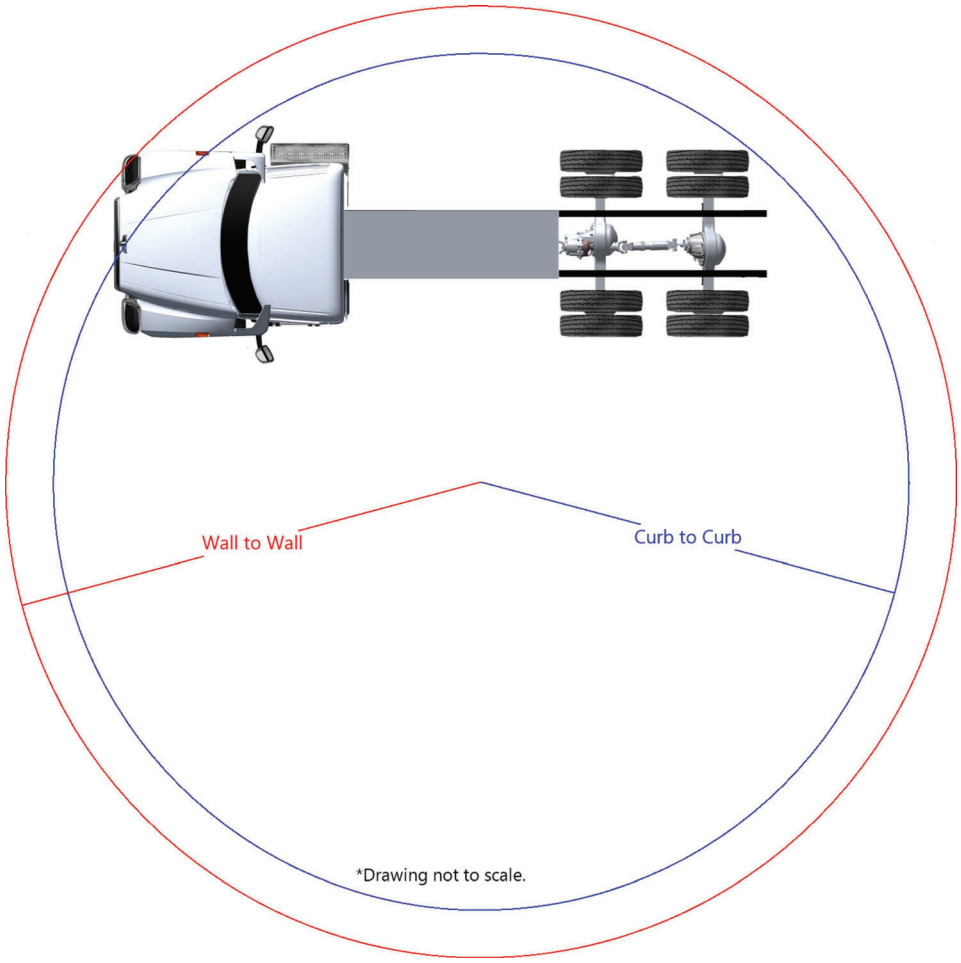

LEFT TURN RADIUS		RIGHT TURN RADIUS	
Curb to Curb	32.3	**Curb to Curb**	32.8
Wall to Wall	34.7	**Wall to Wall**	35.2

VEHICLE SUMMARY

Truck	Model 567 / Full Truck	**Wheelbase**	236
Axle	PACCAR FX-20 Steer Axle 20,000 lbs. 4" Drop	**Weight**	17723
Tire	FF: GY 20ply 315/80R22.5 G289 WHA		
Wheel	FF: Alcoa 89H637 22.5 X 9.00 High Polish		

FRAME RAKE

The listed heights should be considered approximations due to variations which may occur in component manufacturing processes, spring set, and the way in which the vehicle is loaded.

Component	Sales Code	Description	Laden	Unladen
Frame	0515010	10-5/8" Steel Rails 326-384"	10.6	10.6
Front Spring	1114030	Taper Leaf Springs, Shocks 20,000 lb	8.0	9.9
Front Axle Drop 3.5""	1011890	PACCAR FX-20 Steer Axle 20,000 lbs. 4" Drop	-0.5	-0.5
Height Adj.		80mm Front Spring Spacer Blocks	3.1	3.1
Front Tires	5032320	FF: GY 20ply 315/80R22.5 G289 WHA	20.0	20.8
		Front Frame Height	**41.3**	**44.0**
Frame	0515010	10-5/8" Steel Rails 326-384"	10.6	10.6
Subframe				
Suspension	1821800	Peterbilt Air Trac 40,000 lbs, 52in Axle Spacing	11.0	11.4
Rear Tires	5133600	RR: GY 16ply 11R22.5 Fuel Max RTD	19.9	20.8
		Rear Frame Height	**41.5**	**42.8**
		Frame Rake	**0.2**	**-1.2**
		Frame Rake Slope (%)	**0.1**	**-0.5**

These characteristics are considered to be out of standard range:
Laden rake more than 1% of wheelbase from level (positive or negative).

Std/ Opt	Description	$ List	Weight
Base Model			
S	**Model 567** The Model 567 is available in both a set-forward and set-back front axle configuration to provide customers with maximum versatility for their application requirements. For weight-sensitive applications, the set-forward front axle provides optimized weight distribution and compliance with bridge laws. The Model 567 has steer axle ratings up to 22,000 lbs. The 567 also offers single, tandem or tridem drive axles and a variety of lift axles for added versatility. Available with a 115" or 121" BBC and as a day cab or with a selection of detachable sleeper configurations, the 567 is as versatile as it is reliable.	207,933	**14,800**
O	**Hazardous Waste**	0	**0**
O	**Tanker, Liquid Bulk** General freight (linehaul) service using a liquid bulk tanker body or tanker trailer.	0	**0**
O	**Tank** A truck equipped to transport liquefied loads, dru bulk cargo, or gases. May be insulated or non-insulated; pressurized or non-pressurized; and designed for single or multiple loads (often by means of internal divisions in their tank).	0	**0**
O	**California Registry** California RegistryRequired for all vehicles that will be registered in the State of California.	0	**0**
Configuration			
S	**Not Applicable** Secondary Manufacturer	0	**0**
Frame & Equipment			
O	**10-5/8" Steel Rails 326-384"** 10.625 x 3.45 x .313 Dimension, 1,776,000 RBM; Yield Strength: 120,000 psi. Section Modulus: 14.8 cubic inches. Weight: 1.44 lbs/inch pair	389	**190**
O	**Full Steel Inner Liner**	1,827	**690**
O	**Heavy-Duty Iron Front Spring Brackets** With Front Air Leaf the front spring bracket is iron but not the shackle bracket	330	**35**
O	**Zinc Coated Anti Corrosion Treated Frame Rails** Requires Frame Rail Code. Zinc Phosphate coating will replace the standard frame rail primer and provide added corrosion prevention for your customer's operating in severe conditions or in climates where vehicle rust is common.	387	**4**
S	**Aluminum Frame Rail Crossmembers** Excludes suspension	0	**0**
O	**EOF Square without Crossmember** End-of-frame square without crossmember. For use with body builder installed crossmember.	57	**-64**

Std/ Opt	Description	$ List	Weight
O	**Omit Rear Mudflaps and Hangers**	-58	**-25**
Front Axle & Equipment			
O	**PACCAR FX-20 Steer Axle 20,000 lbs. 4" Drop** Axle is designed for applications with a gross axle weight rating (GAWR) of 20,000 pounds. Front axle is designed for demanding applications such as construction, heavy haul, refuse, and other vocational uses. Robust forged steel beam construction for long-lasting performance. It utilizes innovative tapered kingpin roller bearings for more efficient operation and improved steering efficiency. The PACCAR Steer Axle comes standard with the PACCAR warranty of 5 years, 750,000 miles.	2,631	**137**
O	**Taper Leaf Springs, Shocks 20,000 lb** Standard with Heavy Resistance Shocks.	652	**119**
O	**Power Steering TRW TAS85 Dual Gear** For use with 20,000-22,000 lb. axle ratings. Glidekote splines on steering shaft extend service life of components.	2,545	**73**
O	**Power Steering Reservoir Frame Mounted w/Cooler** A power steering cooler helps reduce the heat of the power steering fluid. This is commonly used with systems that may experience more stress from towing or off-road driving.	213	**2**
S	**PHP10 Aluminum PreSet PLUS Hubs Air Disc** PHP10 aluminum PreSet PLUS hubs air disc have a fully integrated spindle nut design, an optimized wheel spacer, magnetic fill plug, with a seal and bearings. Use with Front Axle.	0	**0**
S	**Bendix Air Disc Front Brakes** Bendix air disc front brakes use a floating caliper design to provide foundation braking on all axles and complies with reduced stopping distance regulations.	0	**0**
S	**Tenneco Shocks For Steer Axle** Integrated front suspension to suit heavy duty truck market, combining the air spring and the damper into one module.	0	**0**
O	**PACCAR FX Wide Track IPO Standard** 71in KPI IPO 69in front axle for improved turning radius.	0	**15**
Rear Axle & Equipment			
O	**Dana Spicer DSH40 40,000 lb, High Performance 40** Interaxle diff lock air rocker occupies space of one gauge. Laser factory axle alignment to improve handling & reduce tire wear. Magnetic rear axle oil drain plug captures & holds any metal fragments in drive axle lube to extend service life. Parking brakes on all drive axles for optimal performance. Cognis EMGARD® FE 75W-90 synthetic axle lube provides over 1% fuel economy improvement. Reduces wear & extends maintenance intervals, resulting in increased uptime. Provides improved fluid flow to protect components in extreme cold conditions & withstand the stress from high temperatures, extending component life.	500	**179**
O	**PHP10 Aluminum Preset PLUS Hubs - Air Disc**	1,792	**0**
O	**Separate Dash Controls, Cont Trac Full Lock**	118	**2**

Std/ Opt	Description	$ List	Weight
	Dana Spicer or Meritor - Tandem or Tri-Drive Axles (Air Rocker Switch occupies the space of two gauges for tandem axle and three gauges for tri-drive axle)		
O	**SBM Valve** Full trucks require a spring brake modulation (SBM) system for emergency braking application. This system requires an SBM valve and a relay valve with spring brakes on the rear axles. The SBM valve allows the foot valve to operate the rear axle spring brakes if a failure exists in the rear air system.	285	**0**
O	**Tanker Height Less Than 75"** From top of Frame Rail. Bendix ESP Tanker/Pumper/Vacuum	0	**0**
O	**Bendix ESP Electronic Stability Program With ATC** Truck, pumper/tanker/vacuum (requires body manufacturer code). Conventional set-forward front axle and set-back forward axle requires 170"- 311" wheelbase. Model 348 requires 170" - 282" for single axle and 170" - 311" for tandem axle. The system provides added stability and traction by applying the brakes when excessive wheel slip or a critical stability threshold is detected. For more information please see Truck Sales Bulletin 10-12.	0	**0**
S	**Anti-Lock Braking System (ABS) 6S6M** ABS-6. Includes air braking system.	0	**0**
O	**Omit SmarTire TirePressure Monitoring** System Next Gen TPMS	-446	**0**
S	**Synthetic Axle Lubricant All Axles** Peterbilt heavy duty models include Fuel Efficient Cognis EMGARD FE75W-90 which provides customers performance advantages over current synthetic lubricants with reduced gear wear and extended maintenance intervals, resulting in increased uptime. In addition, the lubricant provides improved fluid flow to protect gears in extreme cold conditions and withstand the stress from high temperatures, extending component life.	0	**0**
O	**Air Disc Rear Brakes, Tandem Drive Axle** Includes Automatic Slack Adjusters.	401	**0**
O	**Diff Lock Tandem Axles** With Speed Interlock. Automatically Disengages Wheel Diff Lock at Speeds Above 25 mph.	2,005	**60**
O	**Ratio 3.90 Rear Axle**	0	**0**
O	**Peterbilt Air Trac 40,000 lbs, 52in Axle Spacing** Light Weight	552	**170**
O	**Air Springs, Internal Bumpers** Air Trac / Air Leaf suspensions	60	**0**
O	**Dash Mtd Dump Switch with Indicator Light** Dash mounted dump switch with indicator light for suspension.	59	**2**
Engine & Equipment			
O	**X15 500V@1900 GOV@2000 1850@950** Productivity Series (2024 Emissions)	13,694	**465**

Std/ Opt	Description	$ List	Weight
	N21350 C121 64....Maximum Accelerator Vehicle N21370 C128 64....Maximum Cruise Control Speed N21460 C132 1400..PTO Maximum Engine Speed N21520 C133 5.....Idle Shutdown Timer N21610 C188 39....Idle Shutdown Cold Ambient A N21620 C189 60....Idle Shutdown Intermediate A N21630 C190 80....Idle Shutdown Hot Ambient Ai N21550 C206 35....Idle Shutdown Percent Engine N21340 C209 120...Maximum Vehicle Speed N21510 C225 YES...Idle Shutdown with Parking B N21450 C231 NO....Gear Down Protection N21570 C233 NO....Idle Shutdown Manual Overrid N21440 C234 NO....Engine Protection Shutdown N21480 C238 NO....Cruise Control and Engine Br N21470 C239 NO....Cruise Control Auto-Resume N21430 C333 0.....Driver Initiated OverrideMax N21410 C334 0.....Driver Initiated Override Ma N21590 C382 YES...Idle Shutdown Hot Ambient Au N21500 C395 0.....Green House Gas Automatic En N21530 C396 YES...Idle Shutdown Warning Period N21540 C397 60....Idle Shutdown Warning Period N21320 C399 120...Green House Gas Vehicle Spee N21400 C400 252...Driver Initiated Override Re N21420 C401 10....Green House Gas Vehicle Spee N21330 C402 0.....Green House Gas Vehicle Spee		
S	**VMUX Electronics Architecture**	0	**0**
S	**Engine Idle Shutdown Timer Enabled**	0	**0**
O	**Enable EIST Ambient Temp Overrule**	0	**0**
	Eff EIST NA Expiration Miles	0	**0**
	Effective VSL Setting NA	0	**0**
O	**Typical Operating Speed 65 MPH**	0	**0**
O	**Powertrain Optimized for Balance** Best analysis for vehicles where service includes frequent start and stop cycles.	0	**0**
O	**CARB Engine Idling Compliance** PACCAR PX-7, PX-9 and MX, Cummins X15 and ISX diesel engines will include the required factory installed serialized sticker on the drivers door to identify them as meeting the NOx idling standard.	0	**0**
S	**Engine Brake Controls Located on RH Column**	0	**0**
O	**Remote PTO/Throttle, 12-Pin** Eng Bay Remote Control Provision	165	**0**
O	**CARB Emission Warranty**	0	**0**

Std/ Opt	Description	$ List	Weight
S	**EPA Engine Idling Compliance**	0	**0**
O	**200 Amp Alternator, Standard Brush** Bosch Long Haul Extreme, standard brush, 170-200 Amps. Dual internal cooling fans, and externally-mounted rectifier and regulator.	291	**0**
O	**PACCAR Premium Starter - X15 Engines Only** PACCAR Premium 12 volt. Better cranking power, lower current draw and improved warranty to 36 months / 350,000 mi / 560,000 km.	464	**0**
O	**3 PACCAR AGM 12V Batteries 2775 CCA**	581	**0**
O	**Battery Jumper Terminal Mounted Under Hood** LH Frame Rail. Not available with PX-7 engines.	140	**4**
O	**Intellitec Battery Disconnect Switch** Mounted in cab.	1,576	**4**
O	**2-Speed Fan Clutch For Frequent Start/Stops** A 2-speed fan clutch is ideal for vocational applications where the fan clutch engagement time exceeds 10% of the engine run time. When the fan clutch is disengaged, the fan still rotates at 15-25% of the engine RPM. This fan rotation provides crucial airflow to the engine and draws virtually no horsepower.	537	**0**
O	**18.7 CFM Naturally Aspirated Air Compressor** X15 Only	0	**0**
O	**Intebrake (Furnished on Engine)** Features a dedicated cam lobe design for optimum power and three-stage engine brake operation.	0	**0**
O	**PACCAR Fuel/Water Separator Extended Service Interval**	239	**0**
O	**Fuel Heat for Fuel Filter**	54	**0**
O	**No Electric Heat Option for Fuel Filter**	0	**0**
O	**Engine Protection Shutdown w/ Label** Includes oil pressure, oil temperature, coolant temperature, and intake manifold temperature.	6	**0**
S	**High Efficiency Cooling System** Cooling module is a combination of steel and aluminum components, with aluminum connections to maximize performance and cooling capability. Silicone radiator & heater hoses enhance value, durability, & reliability. Constant tension band clamps reduce leaks. Chevron Delo Extended Life Coolant (NOAT) extends maintenance intervals reducing maintenance costs. Anti-freeze effective to -30 degrees F helps protect the engine. Low coolant level sensor warns of low coolant condition to prevent engine damage. Radiator Size by Model: 367 1325 sq in, 367 HH Fepto 1325 sq in, 365 Fepto 1183 sq in, 365 Full Frame Extension 1000 sq in, 520 1202 sq in, 579 1456.9 sq in, 535/536/537/548 949.3 sq in, 537/548 VOC 1000.3 sq in, 389/367 HH 1604 sq in, 365/567 1379 sq in.	0	**0**
S	**(1) Air Cleaner Firewall Mounted**	0	**0**

Std/ Opt	Description	$ List	Weight
	Molded rubber air intake connections with lined stainless steel clamps seal to prevent contaminants in air intake.		
S	**Exhaust Single RH Side of Cab** DPF/SCR RH Under Cab, Single Module	0	**0**
O	**Curved Tip Standpipe(s)**	43	**1**
O	**Chrome Finish Over Elbows for Single Exhaust** Requires stainless steel muffler guard/fairing (3381830), and Aftertreatment right-hand under cab.	105	**7**
O	**36" Ht, 5" Dia Chrome, Clear Coat Standpipe(s)**	139	**4**
Transmission & Equipment			
O	**Allison 4000 RDS-P Transmission, Gen 6** Rugged Duty Series	23,391	**528**
O	**RPL25 Driveline, 1 Midship Bearing** Requires RPL20 Driveline interaxle (option 4210870) for tandem rear axles. Provides a driveline that is permanently sealed and lubricated. All Meritor drivelines will be primed before painted, improving paint adhesion for longer lasting quality in the field.	832	**105**
O	**RPL20 Driveline Interaxle** Requires RPL20 Driveline interaxle (option 4210870) for tandem rear axles. RPL20 series drivelines are built for heavy-duty commericial vehicles and are permanetely lubricated and sealed for life with triple lip seals to protect against contaminants. All Meritor drivelines will be primed before painted, improving paint adhesion for longer lasting quality in the field.	0	**0**
O	**(1) Dash Mounted Single Acting EOH PTO Control** Electric-over-hydraulic, spec'ing PTO switch does not ensure the PTO will fit. Sends signal to Allison to engage PTO.	106	**0**
O	**Auto Neutral Activates With Parking Brake** Auto Neutral helps improve jobsite safety by reducing the possibility of the truck moving due to throttle application.	21	**0**
O	**Allison FuelSense Not Desired** Dynamic Shift Sensing	0	**0**
O	**Allison Neutral At Stop** Neutral at Stop features and benefits: Reduces or eliminates the load on the engine when vehicle is stopped, can help lower fuel consumption and C02 emissions, and is included in FuelSense 2.0 Plus and Max packages only.	0	**0**
O	**Allison 6-Speed Configuration, Close Ratio Gears** Allison 4000 transmission only	0	**0**
O	**Dash Mounted Push Button Shifter** Available with Allison transmissions	148	**0**
Air & Trailer Equipment			
O	**Bendix AD-HF EP Air Dryer, Heater** Coalescing filter, extended purge. Bendix AD-HF air filters protects the life of your engine system and components. Proven PuraGuard oil	160	**6**

Std/ Opt	Description	$ List	Weight
	coalescing technonlgy in the the air dryer catridge. This oil coalescing filter ensures the removal of oil and oil aerosols before they can contaminate the moisture removing desiccant.		
O	**Pull Cords All Air Tanks**	4	**1**
S	**Nylon Chassis Hose**	0	**0**
O	**Compressor Discharge Line Test Valve**	306	**0**
S	**Steel Painted Air Tanks** All air tanks are steel with painted finish except when Code 4543330 Polish Aluminum Air Tanks is also selected (then exposed air tanks outside the frame rails will be polished aluminum). Peterbilt will determine the optimal size and location of required air tanks. Narratives requesting a specific air tank size or location will not be accepted for factory installation. See ECAT to determine number or location of air tanks installed.	0	**0**
O	**Omit Standard Trailer Connection Package** Omits 12' AE lines, hose tenna, hand valve	-352	**-28**
Tires & Wheels			
O	**FF: GY 20ply 315/80R22.5 G289 WHA** Diameter = 43.1 inches; SLR = 20.0 inches. Compares to Michelin XZUS 2 and Bridgestone M860 tread.	868	**74**
O	**RR: GY 16ply 11R22.5 Fuel Max RTD** Efficiency Rating: Poor	2,364	**120**
S	**Code-rear Tire Qty 08**	0	**0**
O	**FF: Alcoa 89U637 22.5 X 9.00 High Polish** Aluminum, Ultra ONE technology that saves more than 50 lbs. versus a comparable steel wheel. Built for refuse, logging, mining and other heavy haul applications that demand a tough wheel. Each wheel offers a 10,000 lbs. load rating.	506	**-36**
O	**RR: Alcoa 885657 22.5X8.25 High Polish** Aluminum wheel severe service.	1,956	**-136**
S	**Code-rear Rim Qty 08**	0	**0**
O	**Wheel Guards, Tandem Axle** Between brake drum and wheel. Wheel guards provide a protective barrier to maintain the integrity between the brake drums and wheels to ensure the maximum life for your polished wheels.	41	**0**
O	**Wheel Guards, Steer Axle** Between brake drum and wheel. Wheel guards provide a protective barrier to maintain the integrity between the brake drums and wheels to ensure the maximum life for your polished wheels.	21	**0**
O	**Wheel Guards, Tandem Axle Between Wheels** Bewtween wheels. Wheel guards provide a protective barrier to maintain the integrity between the brake drums and wheels to ensure the maximum life for your polished wheels.	41	**0**

Std/ Opt	Description	$ List	Weight
Fuel Tanks			
O	**26" Aluminum 70 Gallon Fuel Tank LH U/C** Includes steps for cab access. Paddle handle filler cap with threadless filler neck. Top draw fuel plumbing reduces chance of introducing air into the fuel system during low fuel level conditions due to the central placement of fuel pickup tube. Wire braid fuel lines increase durability & reduce potential for leaks.	539	**18**
O	**Location LH U/C 70 Gallon**	0	**0**
O	**Fuel Cooler** Required with single fuel tank	185	**15**
O	**Polish (1) Non-Slip Fuel Tank Step, U/C Tank Only**	29	**0**
O	**Polish (1) Aluminum Fuel Tank**	261	**0**
O	**Polish All Fuel / Hydraulic Tank Straps** Does not apply to rectangular DEF tank straps	83	**0**
S	**DEF Tank Mounted LH BOC** Models 220 and 520 mounted left hand back-of-cab.	0	**0**
O	**DEF To Fuel Ratio 2:1 Or Greater**	0	**0**
O	**Polished Stainless Steel Cover For DEF Tank**	275	**0**
S	**DEF Tank Small, HD 14 Gal 2.1M MD 5.5 Gal**	0	**0**
O	**RH Tank None Furnished**	-712	**-86**
Battery Box & Bumper			
O	**Omit Standard Battery Box** Use with passenger seat/in-cab battery box codes only	-579	**-45**
O	**Additional Aluminum Battery Box LH U/C** Non-slip step	879	**57**
O	**Polish Battery/Tool Box(s), Aftertreatment Cab** Entry complete	288	**0**
S	**Aftertreatment Aluminum Non-Slip Cab Entry** Aftertreatment right-hand under cab step. DPF/SCR for diesel engines, catalyst for natural gas engines. On Models 579 specifying chassis fairings, the box is aerodynamic.	0	**0**
O	**Stainless Steel Bumper Swept Back Polished** Without FEPTO	38	**40**
Cab & Equipment			
O	**Vocational 121" BBC Alum Cab and Metton Hood SBFA** Stainless crown and grille with tilt assist.	3,155	**30**
O	**Thermal Insulation Package in Cab**	21	**0**

Std/ Opt	Description	$ List	Weight
	The thermal insulation package is designed to make the cab thermally efficient in extreme temperatures. The model 520 adds insulation surrounding the doghouse to reduce engine heat transmitted to the cab.		
S	**No Sleeper Selected**	0	**0**
O	**Rubber Fender Lips 4.5" Wide**	565	**6**
S	**Peterbilt ST Driver** Peterbilt ST air seat, high height backrest, adjustable seat track length, 1 chamber lumbar support, suspension with fixed damping, fore-aft isolator with lockout, Vinyl bellows over suspension. Adds 40mm of increased space for steering wheel to chest and improved driver ingress/egress into cab and sleeper (knee sweep) with improved passenger side ingress/egress for personal carog/luggage. Standand vinyl finish - color coordinate with interior color.	0	**0**
S	**Peterbilt ST Non-Adjustable Passenger Seat** Standard vinyl, no suspension cover, no seat back recline.	0	**0**
O	**Drivers Armrest - RH Only**	125	**2**
O	**Passenger Armrest - LH only** Required with Evolution LX seats, optional with Evolution ST Seats.	125	**2**
O	**Black Seat Color IPO Standard Color**	0	**0**
O	**Seat Belt Color Red IPO Standard Black**	11	**0**
O	**Battery Box Under Passenger Seat** Only available with non-adjustable seat or no furnished passenger seat. Includes disconnect switch.	2,600	**40**
O	**Seat Belt Alarm System - Driver Seat Only** Seat belt alarm system driver side only. Radio mute when seat belt warning active and compatible radio.	96	**0**
S	**Air Ride Driver**	0	**0**
S	**High Back Driver**	0	**0**
S	**Vinyl Driver**	0	**0**
S	**Non-Air Ride Passenger**	0	**0**
S	**High Back Passenger**	0	**0**
S	**Vinyl Passenger**	0	**0**
S	**Steering Wheel With Multi-Function** Includes Peterbilt logo on horn button , audio volume, seek, mute and mode button on LH pod with cruise control on/off/cancel, set/resume and accelerate/coast on the right pod.	0	**0**
O	**High-Visibility Interior Grabhandles, Painted** Bright yellow interior grabhandle for vocational vehicles.	42	**0**

Std/ Opt	Description	$ List	Weight
S	**Adjustable Steering Column - Tilt/Telescope**	0	**0**
O	**Vanity Mirror on Inside Sunvisors** For use with ProBilt 1.9, Prestige (1.9 & 2.1) or Premier (2.1) interiors.	23	**0**
S	**Prestige Interior - Sterling Gray** Features single tone dash with tough, scratch resistant materials including soft touch points on top of dash. Top of dash, door panel uppers, and kick panel are charcoal to conceal dirt and mitigate wear. Includes unique technical grained A,B, C & D instrument panels with contoured doorpads, padded fabric headliner and vinyl wall panels. Superior ergonomics are achieved while maximizing productivity featuring: multiple power ports, (2) coat hooks, header-mounted domelight, power lift driver and passenger windows, LH and RH door mounted map pockets with built-in courtesy lights, driver and passenger dome/reading lights and footwell lighting. Comfort features include automatic temperature HVAC controls, 18 inch 4-spoke soft-touch steering wheel, soft-touch steering column cover, rubber flooring, (3) inside sunvisors, integrated "dead pedal, cup holder and map bin in dash.	0	**0**
O	**Exterior Cab Entry Grabhandle** Textured; NFPA compliant. Available on Day Cab specifications only.	174	**0**
O	**Dark Window Tint IPO Standard Tint - Day Cab**	30	**0**
O	**3-Piece Glass Rear Cab Window, All Pieces Fixed**	241	**12**
S	**Day Cab Rear Window** Day cab rear window flush to back of cab.	0	**0**
S	**1-Piece Curved Windshield**	0	**0**
S	**Power Door Locks and Power Window Lifts** Standard	0	**0**
S	**Combo Fresh Air Heater/Air Conditioner** With radiator mounted condenser, dedicated side window defrosters, Bi-Level Heater/Defroster Controls, 54,500 BTU/HR, and silicone heater hoses.	0	**0**
O	**Outside Sunvisor - Stainless Steel** Not available with 2.1M high roof sleeper.	978	**0**
O	**Peterbilt Aero Rear View Mirror, Motorized** Includes top mirror with motorized, adjustable dual axis heated glass. Bottom mirror is an integrated convex surface. Includes black textured arms with breakaway feature.	314	**3**
O	**Aero Rear View Mirror Housing - Body Color** (Same Color as Vehicle Body)	0	**0**
S	**Look Down Mirror Over Passenger Door** with Black Housing	0	**0**
O	**(2) PB Air Horns Round, 23" Length, Roof Mounted** Round horn shield.	689	**8**
O	**ConcertClass, AM/FM, Weatherband, 3.5 Aux**	415	**10**

Std/ Opt	Description	$ List	Weight
O	**Standard Speaker Package For Cab** (2) Speakers	60	**4**
O	**Radio Mute When In Reverse** For automatic or automated transmission	0	**0**
O	**Bluetooth Phone and Audio Requires USB Port**	56	**0**
O	**USB Port**	56	**0**
O	**Cobra 29 CB Radio Mounted Center Of Header** Without weatherband. Mounted in center of header with sound tracker & illuminated panel. Includes wiring, microphone clip, & speaker. Must select antenna(s) o ption.	326	**10**
O	**(2) Antennas For Factory Installed Or F/O CB** Mounted RH/LH side of roof, with antenna cables	192	**2**
S	**SmartLINQ Remote Diagnostics** SmartLINQ is Peterbilts proprietary remote diagnostics service which monitors the engine and aftertreatment for diagnostic codes providing real-time code analysis maximizing vehicle uptime and strengthening the fleets partnership with their dealer. SmartLINQ provides fault coverage for over 800 codes, a customizable email notification for 116 codes plus a web portal to manage your entire fleet included at no additional charge. SmartLINQ is compatible with any telematics system and doesnt require a specific fleet management system. For those whose customers utilize PeopleNet, the pre-wire with remote diagnostics will provide a more integrated solution utilizing the existing SmartLINQ modem. For those whose customers utilize other fleet services products, the existing pre-wire option for the other fleet service devices will continue to be available.	0	**0**
O	**Rear Wall Deep Record/Map Pocket**	78	**0**
O	**Removable Bugscreen Behind Grille**	183	**2**
S	**Peterbilt Electric Windshield Wipers** With Intermittent Feature.	0	**0**
O	**Cab Air Suspension**	250	**0**
O	**Auto Reset Circuit Protection** Daycab and Sleeper	19	**0**
O	**Triangle Reflector Kit, Ship Loose** Florescent triangle emergency road flares are designed to meet and exceed all DOT standards.	36	**13**
O	**Fire Extinguisher, Mounted Inboard Driver Seat** Hazmat approved UL listed/rated ABC	74	**8**
O	**Backup Alarm (107 DB)**	137	**3**
O	**Drive Axle #1 Front Oil Temperature Gauge** 52mm round, backlit. Physical gauges must be ordered in pairs and are limited to a total of 6. If this option is selected on a truck with VMUX electrical architecture, the gauge will be included in the digital display.	148	**0**

Std/ Opt	Description	$ List	Weight
O	**Drive Axle #2 Rear Oil Temperature Gauge** 52mm round, backlit. Physical gauges must be ordered in pairs and are limited to a total of 6. If this option is selected on a truck with VMUX electrical architecture, the gauge will be included in the digital display.	175	**0**
O	**Engine Oil Temperature Gauge** 52mm round, backlit. These physical gauges must be ordered in pairs and are limited to a total of 6. If this option is selected on a truck with VMUX electrical architecture, the gauge will be included in the digital display.	57	**0**
O	**Transmission Oil Temperature (Main)** Located in Digital Cluster Display.	28	**0**
O	**General Air Pressure 1 Gauge** 52mm round, backlit. Physical gauges must be ordered in pairs and are limited to a total of 6.	173	**0**
S	**Air Filter Restriction Pressure Gauge** Located in Digital Cluster Display	0	**0**
S	**Brake Application Air Pressure (Tractor)** Located in Digital Cluster Display.	0	**0**
O	**Increased Air Filter Full Indication** For air filter restriction gauge	0	**0**
O	**Suspension Air Pressure 1 (Load)** Located in Digital Cluster Display	144	**0**
O	**Fuel Filter Restriction Gauge** 52mm Round, backlit. Physical gauges must be ordered in pairs and are limited to a total of 6. If this option is selected on a truck with VMUX electrical architecture, the gauge will be included in the digital display.	209	**0**
O	**Warning Light Battery Disconnect, Switch Engaged** Marker light external mounted	111	**0**
O	**(4) Additional Dash Switches With Wiring** Located on dash panel C. Availability subject to dash space. Includes 4" 14 gauge wire with butt splice at rear of each additional switch.	171	**1**
O	**Engine Hourmeter Gauge** Located in Digital Cluster Display	0	**0**
O	**Engine PTO Hourmeter Gauge** Located In Digital Cluster Display	0	**0**
S	**Engine Percent Torque** Located in Digital Cluster Display	0	**0**
O	**Main Instrumentation Panel** Digital Cluster 15" Display includes: Speedometer, Tachometer, Primary Air Pressure, Secondary Air Pressure, Fuel Level, DEF Level, DPF Filter Status, Fuel Economy, Oil Pressure, Coolant Temp, and Voltmeter.	0	**0**
O	**Manifold Pressure Gauge** 52mm Round, backlit. Physical gauges must be ordered in pairs and are limited to a total of 6. If this option is selected on a truck with VMUX electrical architecture, the gauge will be included in the digital display.	51	**2**
S	**Headlights Projector Module Pod** Fender mounted turn signals, projector module low beam, complex reflector high beam, pod mounted	0	**0**

Std/ Opt	Description	$ List	Weight
S	**(5) Marker Lights, Aero LED** On roof, visor, or fairing	0	**0**
O	**(2) Peterbilt Fog Lights** Recessed in Bumper	118	**6**
S	**Daytime Running Lights** The brake interlock turns the daytime running lights off when the parking brakes are engaged. This is required on all Canadian vehicles.	0	**0**
O	**Incandescent Square Stop/Turn/Tail/Backup** Left-hand / right-hand square end of frame or dropped a-brace	52	**9**
O	**Additional LED Turn Signals** Mounted lower rear corners back of cab / back of sleeper	212	**7**
O	**(1) F/O Load Light, Switch, (2) 10' Wire Coils** (1) furnished by owner load light, switch, (2) 10" wire coils, under cab/sleeper.	106	**3**
Paint			
S	**Standard Paint Color Selection**	-200	**0**
S	**(1) Color Axalta Two Stage - Cab/Hood** Base Coat/Clear Coat N85020 A - L0006EY WHITE N85500 CAB ROOF L0006EY WHITE N85300 FENDER L0006EY WHITE N85200 FRAME L0001EA BLACK N85400 HOOD TOP L0006EY WHITE	0	**0**
Shipping Destination			
Options Not Subject To Discount			
S	**Peterbilt Class 8 Standard Coverage** 1 year/100,000 Miles (160,000 km)	0	**0**
O	**Fuel Price Index Factor $99 NET**	99	**0**
O	**SmartLINQ RD - 3YR Sub** Cummins Engines	499	**0**
O	**Engine CARB State Of Registration**	9,000	**0**
O	**Base Warr: Emissions (CARB Operation)** 5Yr/350K MI - X15 EFF/PRO Engine	2,320	**0**
O	**Vehicle Layout** Option is not subject to discount. Fleets will be split prior to build so that the charge is applied to only one unit. Quotes will not reflect this. ***Narr*** *Please contact : Jeff Quemada 626-905-1799*	1,500	**0**
Miscellaneous			
S	**Day Cab / Prestige Interior (DM)**	0	**0**

Std/ Opt	Description	$ List	Weight
O	**State Registry: California**	0	**0**
O	**Peterbilt Sourcewell Program Code**	0	**0**
O	**DO NOT DRIVE (Dealer/Customer Request)**	750	**0**

Promotions

Special Requirements

Special Requirement 1 0098010
Special Requirement 2
Special Requirement 3
Special Requirement 4

Order Comments

Total List Price (W/O Freight & Warranty & Surcharges)	$285,341	
Marketing and Service Support Fee		$1,395
Prepaid Freight		$3,525
Total Surcharge/Options Not Subject To Discount		$13,418
Total Weight		17,690

Prices and Specifications Subject to Change Without Notice.

Unpublished options may require review/approval.
Dimensional and performance data for unpublished options may vary from that displayed in CRM.

PRICING DISCLAIMER

While we make every effort to maintain the web site to preserve pricing accuracy, prices are subject to change without notice. Although the information in this price list is presented in good faith and believed to be correct at the time of printing, we make no representations or warranties as to the completeness or accuracy of this information. We reserve the right to change, delete or otherwise modify the pricing information which is represented herein without any prior notice. We carefully check pricing specifications, but occasionally errors can occur, therefore we reserve the right to change such prices without notice. We disclaim all liability for any errors or omissions in the materials. In no event will we be responsible for any damages of any nature whatsoever from the reliance upon information from these materials. Please check your order prebills to confirm your pricing information

Shipping Destinations

Intermediate Destination: NONE

Final Destinations	Quantity
S990 - Rush Pblt Truck Centers 8830 E Slausen Avenue Pico Rivera, California 90660	**1**

A PACCAR COMPANY

CLASS 8

Warranty
Quick Reference Guide

This is a Quick Reference Guide "ONLY"

It is an itemized general listing of the components and/or items used in the assembly of a Peter
warranty coverage. This list is NOT to be construed as all-inclusive.
Refer to the complete text of the Peterbilt Warranty Agreement Cat. No.5201, 5278, 5018 for sp
the terms, conditions and limitations of said agreement.

BASIC VEHICLE WARRANTY

12 Months / 100,000 Miles / 160,000 Kilometers whichever comes first

- Air Cleaner System (Excludes Filter Element)
- Air Conditioner System
  - Accumulator
  - Actuators, HVAC
  - Blend, Mode, Fresh Air Doors
  - Blower Motor & Wheel
  - Coil, Heater
  - Compressor, Freon
  - Condenser
  - Control, HVAC
  - Drain Valve & Hose
  - Expansion Valve
  - Evaporator
  - Freeze Control Switch
  - Hardlines, Refrigerant
  - Heater Hoses & Clamps
  - Low/High Pressure Switches
  - O-rings
  - Receiver -Dryer
  - Resistor
- Airshield
- Air System
- Air Compressor (Bendix)
- Air Dryer & Purge Valve
- Air Governor
- Air Tank & Drain Valve
- Alternator
- Antenna
- Auxiliary Heater Assembly (Espar)
- Auxiliary Transmissions
- Battery (PACCAR)
- Battery/Tool Box Assembly
- Battery Hold Downs
- Brake
  - Chamber
  - Camshaft
  - Spider
  - Drum (Excludes Scored or Heat Checked)
- Bumper (Includes Aerodynamic Type)
- Cab
  - Heater and Duct
  - Side Extender
  - Skirt
  - Water Leak
  - Tilt Mechanism (Includes Pump)
- Charge Air Cooler
- Charge Air Cooler Hoses & Clamps
- Circuit Breakers
- Clamps, Turbocharger Air Inlet
- Clock (Analog / Digital)
- Clutch, Clutch Linkage
- Collision Avoidance System
- Control Cable
- Cooling Module
- Cruise Control Component
- Deck Plate Lamp
- DEF Heater Control Relay
- DEF Heater Coolant Control Valve
- DEF Heated Lines
- DEF Heating Elements
- DEF Heating Fittings on Supply Module
- DEF Lamp
- DEF Tank
- Door Latch, Lock and Hinge
- Door Pad and Soft Trim
- Driveline, U-Joint and Center Bearing
- Driveline Midship Plate
- Electrical Power Distribution Box
- Electrical Printed Circuit & Harness (Excludes Fuse)
- Engine Related Components
  - Engine Brake (PACBrake)
  - Dipstick and Tube
  - Fan, Fan Clutch and Sending Unit
  - Fan Shroud
  - Heater
  - Manufactured Messaging Products
  - Mount
  - Shutdown System
- Exhaust Stanchion
- Exhaust piping, clamps, gaskets
- Fairing
- Fuel
  - Tank
  - Tank Strap, Cap and Vent
  - Fuel Water Separator and/or Heater
  - Gauge and Sending Unit
- Heat Shield
- Hood Assist Spring and Hook
- Horn - Air or Electric
- Hose and Fitting (Excludes Rubbed or Loose)
- Hub Assembly (Excludes Bearing & Races)
- Hub Caps
- Hubometer
- Ignition Timer
- Instruments
- Lift/Tag/Pusher Axle
- Lift/Tag/Pusher Suspension
- Light Fixture (Excludes Bulb)
- Mirror
- Mud Flap Bracket (Excludes Mud Flap)
- Muffler
- Muffler Clamps
- Muffler Standpipe
- Navigation System (Smart Nav)
- Plating (Includes Chrome)
- Power Steering Pump
- Power Steering Reservoir
- Quarter Fender
- Radiator (Includes Header Gasket)
- Radiator Cap
- Radiator Mounting Brackets
- Radiator Mounting Bushings
- Radiator Tie Rods
- Radio/CB (Unlimited Mileage)
- Seat Assembly
- Seat Belt
- Seat Structure
- Shift Control
- Shock Absorber
- Slack Adjuster
- Sleeper Boot
- Sleeper Extender
- Speaker
- Starter
- Steering
  - Shaft and U-Joint
  - Drag Link
  - Gear Mounting Bracket
  - Pitman Arm
- Steering Wheel and Column
- Step
- Supplemental Restraint System (Rollover Airbag)
- Suspension
  - Axle
  - Beams
  - Dowel Pin
  - Height Control Valve
- Suspens
  - Height
  - Heigh
  - Shock
  - Spring
  - Spring
  - Spring
  - Spring
  - Spring
  - Spring
  - Tie Ro
  - Tracki
  - U-Bolt
- Cab
  - Heigh
  - Heigh
  - Heigh
  - Spring
- Sleeper
  - Height
  - Height
  - Height
  - Spring
  - Suspe
- Switches
- Throttle Lin
- Transfer Ca
- Transmissi
- Turbocharg
- Upholstery
- Valve, All
- Vent - Fres
- Visor (Outs
- Weather St
- Wheel Bea
- Window De
- Window Lif
- Window Re
- Windshield
- Wiper Arm
- Wiper Moto
- Wiring and

PAINT

- Cab, Hood, Sleeper Paint	12 Months 100,000 Miles / 160,000 Kilometers
- Frame Paint - Black Only	12 Months 100,000 Miles / 160,000 Kilometers
- Frame Paint - All colors other than black	6 Months 50,000 Miles / 80,000 Kilometers
- Frame Paint - Bogie, Axle, Component Frame, Cab Mounting Brackets	6 Months 25,000 Miles / 40,000 Kilometers

Rush Truck Centers of California, Inc. dba Rush Truck Center, Los Angeles

MAJOR COMPONENTS
36 Months or 300,000 Miles/480,000 Kilometers whichever shall occur first.
100% Parts and Labor

Axle - Eaton, Meritor and Dana Spicer Axles, Non-Driving and Driving, Single Speed, On-Highway with a Capacity of 46,000 Lbs. or Less (Includes Axle Input and Output Seals)(Excludes Axle Shaft Flange Gaskets, Brake Drums, Brake Shoes, Filters, Hub Assemblies, Hub Caps and Gaskets, Wheel Bearings and Wheel Seals)
Brakes – Bendix and Meritor (except air Disc Brakes)
Applies to Brackets, Cam Shafts, Slack Adjusters and Spiders
Cab, Hood, Hood Half-Fenders, and Sleeper Structure
Cab Fasteners (Excludes Add-On Aerodynamic Devices)
Sheppard and TRW Steering Gears
Manual Transmissions (Excludes Oil Coolers and Shift Controls)
Eaton Auto Shift Transmission

FRAME RAILS, GUSSETS, CROSSMEMBERS AND CAB / HOOD / or SLEEPER
60 Months or 500,000 Miles/800,000 Kilometers whichever shall occur first. 100

Frame Side Rails, Crossmembers, Gussets, A-Braces

Cab, Hood and Sleeper perforation caused by corrosion from within. Corrosion warranty
cab, hood or sleeper panel due to corrosion. Warranty does not apply to corrosion caused

OTHER COVERAGES
12 Months or 50,000 Miles/80,000 Kilometers whichever shall occur first. 100%

Axle Shaft Flange Gaskets
Hub Cap Gaskets
Wheel Seals (Except LMS)
All Gaskets and Seals not specifi

General Warranty Exclusions

- The following components are warranted directly to you by their respective manufacturer, and are not warranted by Peterbilt Motors Company: Engine and Engine Manufacture Brake), Automatic Transmissions, Tires, Tubes, Fifth Wheel, Pintle Hooks, Hitch, Wheels and Batteries not listed.
- Peterbilt does not warrant antifreeze, lubricants, bulbs, fuses, filters, mud flaps, reflectors, winter fronts, wiper nozzles or wiper blades. Trade accessories such as fire extinguis not warranted.
- Peterbilt is not responsible for storage deterioration, wear, and changes in adjustment resulting from normal service. This includes brake and clutch linings, drive belts, wheel ba
- Peterbilt does not warrant metallic chassis (frame) paint. Peterbilt is not responsible for paint chipping or fading, peeling from frame bolts relating to maintenance, or paint peeli
- Damage due to accident, misuse, negligence, improper or inadequate maintenance, or unauthorized modification is not warranted. Failure of replacement parts used to repair a
- Vibrations, squeaks, fitting and hose leaks, unusual noises, rattles, loose nuts/bolts and hose and electrical connections can develop during the early shakedown trips of the ve but not later than 90 days after date of delivery, the necessary adjustments will be made without charge. Such developments after this period are usually the result of use and a
- Peterbilt is not responsible for damage resulting from engine horsepower/torque upgrades.

NON - WARRANTABLE COMPONENTS/ITEMS

 # File with Engine Manufacturer

Engine (see engine coverage)
Engine Accessories
Air Compressor (Engine Manufacturer)
Add-on Aerodynamic Device (Dealer Installed)
Antifreeze Solution
Automatic Transmission (Allison)
Brake Lining
Bulb
Fifth Wheel
Filter Element
Fire Extinguisher
Flag and Flare Kit
Fuel
Fuse
Headlight and Light Bulb
Lubricant
Mudflap
Pintle Hook
Non-Original Equipment
Power Converter
Reflector
Refrigerator
Tire
Tow Pin
Wheels
Winter Front and Bug Screen
Wiper Blade
Wiper Nozzle

NON - WARRANTABLE:
WEAR, DETERIORATION and/or ADJUSTMENTS

Peterbilt assumes no responsibility for wear and/or Deterioration of parts or Changes in Adjustment as a result of Normal Service.

Examples:
Brake Adjustment
Brake Drum
Brake Lining
Bushings (Serviceable)
Clutch Facing
Engine accessory belt
Fuse
Key Fob
Wheel Bearings
Mattress
Paint Chip and/or Fade
Soft Trim and Upholstery
Stainless Steel Discoloration
Tightening a Bolt and/or Fitting
Wheel and/or Axle Alignment
Window and Windshield Glass

This list is NOT to be construed as all-inclusive

NON - WARRA

Any Vehicle on W
Any Vehicle that I
Unauthorized
Damage Due to A
Dyno Testing (Wi
Improper or Insuf
Misuse
Negligence
Storage (Includes
Towing and Road
Transport
Troubleshooting a

Rush Truck Centers of California, Inc. dba Rush Truck Center, Los Angeles

Rush Limited Warranty

NEW PRODUCTS – MANUFACTURER WARRANTIES ONLY. Any warranties on any new product(s) sold by Rush are limited only to any printed warranty provided by the applicable manufacturer of the product. EXCEPT FOR ANY SUCH WARRANTIES MADE BY MANUFACTURERS, THE PRODUCT(S) ARE SOLD WITHOUT ANY OTHER WARRANTIES, EXPRESS OR IMPLIED, INCLUDING ANY IMPLIED WARRANTY OF MERCHANTABILITY OR FITNESS FOR A PARTICULAR PURPOSE, EACH OF WHICH IS EXPRESSLY DISCLAIMED.

USED PRODUCTS – NO WARRANTIES. All used product(s) sold by Rush are sold on an "AS IS, WHERE IS" basis, without any warranties by Rush. EXCEPT FOR ANY MANUFACTURERS' WARRANTIES THAT MAY STILL BE IN EFFECT, ALL OTHER WARRANTIES, EXPRESS OR IMPLIED, INCLUDING ANY IMPLIED WARRANTY OF MERCHANTABILITY OR FITNESS FOR A PARTICULAR PURPOSE, ARE EXPRESSLY DISCLAIMED.

LIMITED WARRANTY ON SERVICES. Rush warrants that all services performed by Rush for a customer, including repair, maintenance and installation services ("Services"), will be performed in a good and workmanlike manner ("Services Warranty"). The Services Warranty is valid for a period of ninety (90) days from the date the Service is completed. Customer's sole and exclusive remedy, and Rush's entire liability, under the Services Warranty is the repair of any nonconforming portion of the Services. RUSH PROVIDES NO OTHER WARRANTIES, EXPRESS OR IMPLIED, CONCERNING ITS SERVICES. The Services Warranty is strictly limited to Services performed by Rush for customer. Rush does not warrant any services provided by any third-party. Any warranties are solely those that are provided by the third-party service provider.

DocuSign Envelope ID: 58D06461-93FD-4DAE-B406-F324B80E9ADA

NIXON-EGLI EQUIPMENT CO.

www.nixon-egli.com

- S. CALIFORNIA: 2044 South Vineyard Avenue, Ontario, CA 91761 • (909) 930-1822 • FAX (909) 923-2356
- N. CALIFORNIA: 800 East Grant Line Road, Tracy, CA 95376 • (209) 830-8600 • FAX (209) 830-8884

July 11, 2023

Jeff Quemada
Rush Truck Centers Los Angeles
8830 E Slauson Ave
Pico Rivera, CA 90660

Quote# 100751
Ref: Thompson STN 3000-50000

We are pleased to provide you a quotation on a new **Thompson Model STN 3000-50000**, complete with all standard equipment, and including:

ONE (1) THOMPSON MODEL STN - 3000 - 50000 Vacuum-Pressure Unit, 70 Bbl., 3000 gallon capacity, designed for a side mounted TTI-VC-454-RM4R Vacuum-Pressure Pump, PTO driven, mounted on customer's cab and chassis, including:

3158 GALLONS SHELL FULL
158 GALLONS OUTAGE = 5%
3000 GALLONS PAYLOAD

- **NON-CODE / NON-SPECIFICATION**

- **INTERNAL DESIGN PRESSURE 25 PSI MAWP**
- **FULL VACUUM, 15 PSI EXTERNAL MAWP**

- **TANK ASSEMBLY -** 67″ O.D. x 16′ – 0″ shell length, .250″ plate shell and ASME dish and flanged heads.

- **TTI-1226 ROLLOVER DAMAGE PROTECTION, (EXTERNAL GUARDS), DOT §178.345-8 (a)(3) & §178.345-8 (c)**.

- **ONE (1) REINFORCING RINGS –** installed interior of shell with 24″ of bottom removed for cleaning.

- **ONE (1) TTI–1131 SURGE BAFFLE –** reinforced formed steel, with 15″ bottom clearance for cleaning.

- **TWO (2) TTI-2020-WS - 20″ ASME WASHOUT ASSEMBLIES** – with hinged cover, Buna-N gasket, installed on top of unit forward of air system and after each surge baffle.

- **TTI–1113 WINGNUT LUG WRENCH**

- **TTI–2020-DS - 20″ ASME LOW PROFILE DOME ASSEMBLY –** with hinged steel cover and Buna-N gasket, for primary float shut-off valve and air system installation, installed behind first washout.

- S. CALIFORNIA: 2044 South Vineyard Avenue, Ontario, CA 91761 • (909) 930-1822 • FAX (909) 923-2356
- N. CALIFORNIA: 800 East Grant Line Road, Tracy, CA 95376 • (209) 830-8600 • FAX (209) 830-8884

- **PRESSURE RELIEF SYSTEM - 2″ KUNKLE PRV** set at 35 PSI.

- **TWO (2) 30/60 VACUUM-PRESSURE GAUGES** – 3 ½″ diameter face, one at dome and one at left rear of unit in live handrail with condensate drain valve.

- **TTI-1100-4, 4″ FLOAT SHUT-OFF VALVE, (PRIMARY) –** with lubricated, spring loaded pivot assembly, stainless steel seat, self-adjusting Buna-N seal and 8″ diameter stainless steel float ball.

- **TTI-1106-4, 4″ LIQUID ENTRY PREVENTOR WITH TTI-1103-4, 4″ FLOAT SHUT-OFF VALVE, (SECONDARY)** – with stainless steel seat, self-adjusting Buna-N seal and 8″ diameter stainless steel float ball and 2″ **STAINLESS STEEL** drain valve.
  - **2″ MI PLATED CAMLOCK ADAPTER WITH SEAL CAP**

- **TTI-1115-2, 2″ BLEEDER ASSEMBLY (VACUUM AND PRESSURE)** with 2″ **(FULL AREA)**, **LUBRICATED PLUG,** regulator valve and manual control to left rear of unit.
  - **2″ MI PLATED CAMLOCK ADAPTER WITH SEAL CAP**

- **FIVE (5) 5” DIAMETER SIGHT GLASSES –** installed at rear head. Empty, half, full and quarter lines to be shown.

TTI LOADING/UNLOADING OUTLETS – DOT §178.345-11

- **4″ INLET - 70° FORMED SEAMLESS PIPE** – ASA flanged approximately 36″ above ground with internal riser and deflector, **EXTENDED ABOVE MAXIMUM LIQUID LEVEL.**

- **4″ INLET VALVE - CLEARFLOW LW - 4000** - quick opening, full area, double disc, flangeless gate valve with replaceable discs and seats, furnished with a threaded companion flange.
  - **4″ MI PLATED CAMLOCK ADAPTOR WITH ½″ SELF-CLOSING SAMPLE VALVE AND SEAL CAP**

- **6″ DISCHARGE - 60° FORMED SEAMLESS PIPE** - ASA flanged approximately 36″ above ground and located to prevent whirlpool of load.

- **6″ DISCHARGE VALVE - CLEARFLOW LW-6000** - quick opening, full area, double disc, flangeless gate valve with replaceable discs and seats, furnished with a threaded companion flange.

  - **6″ MI PLATED CAMLOCK ADAPTER WITH ½″ SELF-CLOSING SAMPLE VALVE AND SEAL CAP**

- **TWO (2) TTI-1144 HANDRAILS -** full length and formed over rear head for grab handles with structural tubing supports, left side live.

- **ONE (1) TTI-1104 ALUMINIUM TOOL BOX -** 36″ wide x 24″ deep, with weather sealed door and keyed latch, mounted under hose rack, on TBD side. Installed with door hinged downward.

NIXON-EGLI EQUIPMENT CO.

www.nixon-egli.com

- S. CALIFORNIA: 2044 South Vineyard Avenue, Ontario, CA 91761 • (909) 930-1822 • FAX (909) 923-2356
- N. CALIFORNIA: 800 East Grant Line Road, Tracy, CA 95376 • (209) 830-8600 • FAX (209) 830-8884

- **TTI-1183 Z-FRAME ASSEMBLY - FULL LENGTH** with 4″ slope to rear, reinforced crossmembers on doubler pads and hardwood breaker strips.

- **TTI-1133 COMBINATION HOLD DOWN CLIPS AND SWAY BRACES -** spring loaded with locking nuts.

- **TWO (2) TTI-1150 HOSE RACKS - FULL LENGTH**, 30″ wide, Z-frame mounted on structural supports with formed **removable aluminum** pans, 9″ side rails and drain troughs at rear with integral hose retainers and steps.

- **TWO (2) HOSE RACK DRAINS -** 1″ clear tube to drip pan under rear valves.

- **TTI-1154 - REAR HOSE SUPPORT**

- **TWO (2) TTI-1155 FENDER ASSEMBLIES -** formed reinforced steel flaps and mud flaps, integral with hose racks.

- **TTI-1109-TN REAR BUMPER – NON-CODE**

- **DOT-FMVSS-108 LIGHTS AND ELECTRICAL – TRUCK-LITE LED (LIGHT EMITTING DIODE) LIFETIME LIGHTING SYSTEM,** vapor proof, easy seal electrical harnesses and junction distribution modules including:

  - **FOUR (4) COMBINATION STOP, TAIL AND DIRECTIONAL –** Truck-Lite – 44202 R LED red.
  - **TWO (2) BACK UP LIGHTS (TRUCK ONLY) -** Truck-Lite – 44205-C LED clear.
  - **TWO (2) COMBINATION STOP, TAIL & DIRECTIONAL (SEMI w/out BACK-UP LIGHTS)** – Truck-Lite – 44202R LED red.
  - **TWO (2) WORK LIGHTS –** Truck-Lite 81714 LED.
  - **TWO (2) COMBINATION MID-TURN AND CLEARANCE –** Truck-Lite – 60275 Y LED amber.
  - **TWO (2) CLEARANCE LIGHTS –** Truck-Lite – 10250R LED red.
  - **FOUR (4) CLEARANCE LIGHTS –** Truck-Lite – 10250Y LED amber.
  - **TWO (2) REFLECTORS –** Truck-Lite – 98006R red.
  - **FOUR (4) REFLECTORS –** Truck-Lite – 98006Y amber.
  - **ONE (1) THREE LIGHT CLUSTER –** Truck-Lite – 10732 stainless steel mount and three (3) Truck-Lite – 10250R LED red clearance.
  - **ONE (1) STOP LIGHT –** Truck-Lite 60250R LED red mounted rear center at maximum height.
  - **ONE (1) LICENSE ILLUMINATOR –** Truck-Lite – 15041 LED with TTI aluminum bracket and step.
  - **ONE (1) ABS LIGHT (SEMI ONLY) –** Truck-Lite – 30230Y LED yellow.
  - **ONE (1) NOSE BOX (SEMI ONLY) –**Haldex BE26100, 7 and 6 wire connections.
  - **DUST/ROCK SHIELDS** installed over electrical in rear fender assemblies.

- **DOT-FMVSS-108 CONSPICUITY SYSTEM -** 3M Scotch-Lite Series 980, 2″ wide

NIXON-EGLI EQUIPMENT CO.

www.nixon-egli.com

- S. CALIFORNIA: 2044 South Vineyard Avenue, Ontario, CA 91761 • (909) 930-1822 • FAX (909) 923-2356
- N. CALIFORNIA: 800 East Grant Line Road, Tracy, CA 95376 • (209) 830-8600 • FAX (209) 830-8884

- **FOUR (4) DOT PLACARDS -** Labelmaster No.126 CT-B with **TTI-1231 ALUMINUM GUARDS.**

- **SET STAINLESS STEEL INSTRUCTION, IDENTIFICATION AND NAMEPLATES.**

COMPLETE UNIT - sandblasted, primed and painted in customer's choice of **ONE (1) COLOR:**
Epoxy Primer and Polyurethane Paint.

NOTE: There will be **EXTRA CHARGES** for custom colors, metallic and multicolor finishes.

PUMP INSTALLATION OPTIONS:

- **THOMPSON VC-565-M4R VACUUM-PRESSURE PUMP, SIDE MOUNTED WITH 4" SUCTION FILTER AND 4-WAY MANIFOLD**
  - PTO – PC/CS INSTALLED
  - OVERSPEED PROTECTION DEVICE
  - PARKING BRAKE INTERLOCK
  - CLEAN, PRIME AND PAINT

OPTIONAL TANK EQUIPMENT:

- **TTI-2107-4, 4″ CENTRIFUGAL SCRUBBER (VACUUM LIQUID SEPERATOR) WITH STAINLESS STEEL MIST EXTRACTOR AND 2″ STAINLESS STEEL DRAIN VALVE. 2″ MI PLATED CAMLOCK ADAPTER WITH SEAL CAP**

- **ONE (1) OSHA CATWALK, FULL LENGTH ON LEFT (DRIVER'S SIDE) WITH REMOVABLE ALUMINUM GRIPSTRUT WALK WITH REINFORCED SUPPORTS AND OSHA TYPE HANDRAILS, 42″ HIGH WITH ONE (1) MIDRAIL AND TTMA-1150-9 SIDE RAIL TOE PLATES EXTENDED DOWN REAR WITH GRIPSTRUT STEPS TO TOP OF BUMPER**

- **GARNET MODEL 808P2 SEE LEVEL ELECTRONIC LIQUID LEVEL GAUGE ASSEMBLY** with stainless comp fittings and LCD display**.**

- **TTI-1109-FB-T, FITTING BASKETS – TWO (2) EACH STEEL TOOL BOXES, 16" TALL x 24" WIDE x 21" DEEP, INTEGRATED INTO REAR BUMPER STEPS WITH PADLOCKED, DIAMOND PLATE HINGED COVER**

- **TTI-1210-65 PRESSURE WASH DOWN SYSTEM, 65 GALLON CAPACITY, ASME CODE FOR 110 PSI MAWP, FRAME MOUNTED, INCLUDING:**
  - **Air pressure manifold from air brake system with a pressure regulator, pressure gauge 0-150 PSI, check valve, shut-off valve, discharge valve, bleeder valve and protection valve.**
  - **Tank system with a inlet, discharge, pressure relief, drain, and constructed of SA-240-304/304L stainless steel**
  - **Hose reel system shall be live reel with spring return, 50 feet of ¾-inch hose, with ball stop and spray nozzle.**

DocuSign Envelope ID: 58D06461-93FD-4DAE-B406-F324B80E9ADA

- S. CALIFORNIA: 2044 South Vineyard Avenue, Ontario, CA 91761 • (909) 930-1822 • FAX (909) 923-2356
- N. CALIFORNIA: 800 East Grant Line Road, Tracy, CA 95376 • (209) 830-8600 • FAX (209) 830-8884

Leadtime: 6-12 Weeks After Receipt of Chassis and Order.

This Quote is Valid for 30 Days

Thank you for the opportunity to quote on your equipment needs. If you have any questions, please feel free to contact me.

Sincerely,

Christian Velasco

Christian Velasco
NIXON-EGLI EQUIPMENT CO.

THOMPSON TANK & MFG. CO. INC. PROPRIETARY RIGHTS ARE IN THE INFORMATION DISCLOSED HEREIN. NEITHER THIS DOCUMENT NOR THE INFORMATION DISCLOSED HERIN SHALL BE REPRODUCED OR TRANSFERRED TO OTHER DOCUMENTS USED OR DISCLOSED TO OTHERS FOR MANUFACTURING FOR ANY PURPOSE EXCEPT AS SPECIFICALLY AUTHORIZED IN WRITING BY T.T.M. CO. INC. THIS DOES NOT APPLY TO INFORMATION FURNISHED BY VENDORS OR OTHERS OUTSIDE THOMPSON TANK CO. INC.

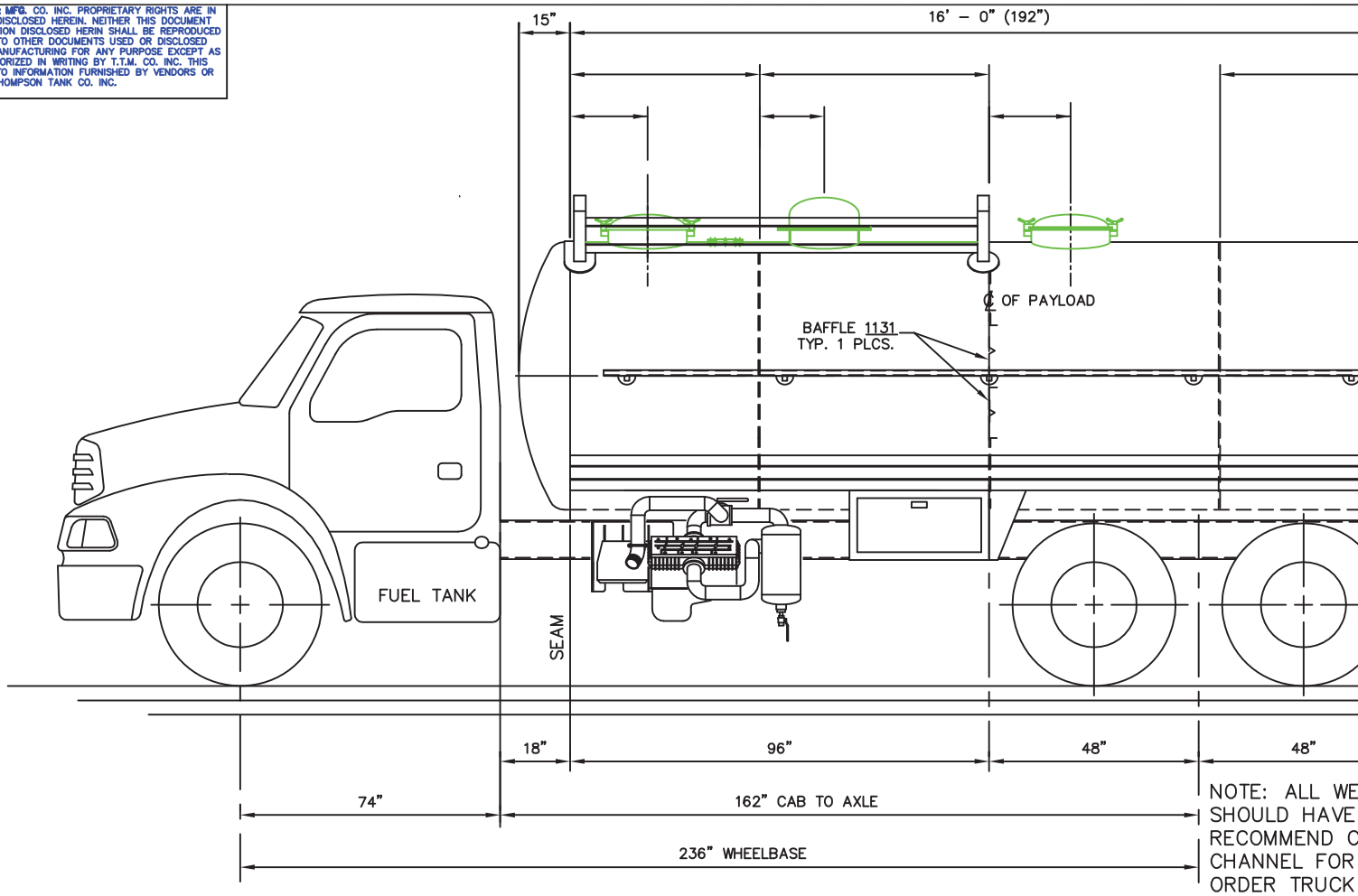

NOTE: ALL WE
SHOULD HAVE
RECOMMEND C
CHANNEL FOR
ORDER TRUCK
AND TACHOME

CHASSIS WEIGHT: 18,099 LBS.
UNIT WEIGHT EMPTY: 9000 LBS.
PAYLOAD 3000 GALLONS @ 8.5 LBS. PER GAL.
ASME CODE: 50# INT. & 15# EXT. MAWP
NATIONAL BOARD: REGISTERED
DOT: 407 / 412 MODEL: ST–3000–50000
PUMP ASSEMBLY: NVE–887 CHALLENGER V.P. PUMP

DRIVER SIDE VIEW

	FRONT AXLE	TOTAL	REAR AXLE
CHASSIS AXLE RATING:	11,352 LBS.	CHASSIS: 18,099 LBS.	6,747 LBS.
FRONT: 20,000	2,000 LBS.	UNIT: 9,000 LBS.	7.000 LBS.
REAR: 40,000	5,100 LBS.	PAYLOAD: 25,500 LBS.	20,400 LBS.
TOTAL: 60,000	18,452 LBS.	TOTAL: 52,599 LBS.	34,147 LBS.

TOLERANCES UNLESS OTHER
LINEAR FR
ANGULAR
±
DO NOT SCALE D
UNLESS OTHERWISE
• INTERPRET DRAWING I
WITH STANDARDS PRE
• SURFACE ROUGHNESS
• BREAK ALL EDGES .00

DocuSign Envelope ID: 58D06461-93FD-4DAE-B406-F324B80E9ADA

DocuSign Envelope ID: 58D06461-93FD-4DAE-B406-F324B80E9ADA

RUGGED, RELIABLE & REWARDING

The Model 567 is a workhorse ready to take on the toughest challenges. New product enhancements have made the Model 567 even better. The new standard 15-inch digital display provides a state-of-the-art driver interface that intuitively delivers information and integrates seamlessly with PTO controls and advanced driver assistance systems. Optional torque-assisted steering eases maneuverability around tight job sites. An enhanced electrical system simplifies integration and customized programming for a wide variety of vocational bodies and equipment.

The Model 567's wide aluminum cab provides a more ergonomic and comfortable workspace for drivers. Stair-style steps and knurled grab handles allow for easy ingress and egress. Enhanced visibility is achieved through the large one-piece windshield and sloped hood. Redesigned side mirrors with large, heated mirror surfaces improve both visibility and reliability. Peterbilt's signature, pod-mounted headlamps are durable, corrosion-resistant and simple to replace.

DURABLE EXTERIOR

The durable aluminum cab is built for long-lasting performance and the Metton® hood is lightweight, strong and impact resistant. The hood opens a full 90 degrees for easier access and serviceability.

OPTIMIZED DRIVER ENVIRONMENT

Combining durability with comfort and functionality, the redesigned dash provides a more ergonomic and comfortable workspace for drivers. The new 15-inch digital display, new switches and updated steering wheel and controls allow for easy operation and maximized safety.

POWER
JOB DON

The Model 567
the PACCAR M
industry-leadin
and uptime.

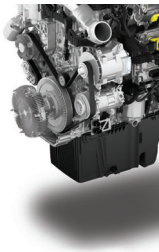

PACCAR

For more information on the Model 567, contact your local Peterbilt dealer or visit **peterbilt.**

Rush Truck Centers of California, Inc. dba Rush Truck Center, Los Angeles

DocuSign Envelope ID: 58D06461-93FD-4DAE-B406-F324B80E9ADA

"WE SHOULD DO EVERYTHING IN OUR POWER..."

– CLESSIE CUMMINS

CUMMINS 2021 X15™ ENGINE PORTFOLIO

EFFICIENCY SERIES

PRODUCTIVITY SERIES

PERFORMANCE SERIES

cummins®

ALWAYS ON

DocuSign Envelope ID: 58D06461-93FD-4DAE-B406-F324B80E9ADA

YOU GET IT ALL.

Improvements made to the X15 lineup have been focused around customers' needs. It's more than just providing the most efficient engine that meets 2021 greenhouse gas standards. It's also about providing an engine that works for you. With a focus on uptime, total cost of ownership and ease of operations, the X15 lineup for 2021 is the best Cummins 15-liter yet. Starting with the most reliable 15-liter ever produced, to offering EX ratings for enhanced driver performance, the X15 gives you the confidence needed to improve your business without sacrificing anything.

SPEND LESS. GO FURTHER.

Cummins X15 engines have some of the longest maintenance intervals in the transportation industry. Our Single Module™ aftertreatment system uses smart logic to inform the operator when the DPF finally needs to be maintained, well in advance of any unexpected downtime.

ITEM	SEVERE <5.0 MPG	SHORTHAUL 5.0 - 5.9 MPG	NORMAL 6.0 - 6.9 MPG	LIGHT >7.0 MPG
OIL DRAIN INTERVAL LEVEL	25,000 Mi 40,000 Km	50,000 Mi 80,000 Km	60,000 Mi 96,000 Km	75,000 Mi 120,000 Km
X15 OIL DRAIN WITH VALVOLINE PB*	30,000 Mi 48,000 Km	55,000 Mi 88,000 Km	65,000 Mi 105,000 Km	80,000 Mi 130,000 Km
X15 OIL DRAIN WITH CUMMINS OILGUARD™ [1]	extensions available	extensions available	extensions available	Up to 100,000 Mi 160,000 Km
FUEL FILTER[2]	25,000 Mi 40,000 Km	50,000 Mi 80,000 Km	60,000 Mi 96,000 Km	75,000 Mi** 112,000 Km

	SEVERE <5.5 MPG	NORMAL 5.5 - 6.5 MPG	LIGHT >6.5 MPG
DIESEL PARTICULATE FILTER[3]	200,000-400,000 Mi 320,000-640,000 Km	400,000-600,000 Mi 640,000-960,000 Km	600,000-800,000 Mi 960,000-1,300,000 Km
DIESEL EXHAUST FLUID FILTER	250,000 Mi 400,000 Km	300,000 Mi 480,000 Km	300,000 Mi 480,000 Km
VALVE ADJUSTMENT	500,000 Mi 800,000 Km	500,000 Mi 800,000 Km	500,000 Mi 800,000 Km

* Cummins recommends Valvoline Premium Blue (PB 8600ES)

** Extending fuel filter interval from 60,000 miles to 75,000 recommends use of extended filter available through Cummins service network.

1 - Up to 100,000-mile oil drain interval with participation in Cummins OilGuard oil analysis program.

2 - For Premium Blue users, the fuel filter interval matches the ODI.

3 - Maintenance lamp will illuminate when DPF maintenance is needed. Cummins recommends replacing the DPF with a Genuine Cummins DPF at the time of ash maintenance interval.

DocuSign Envelope ID: 58D06461-93FD-4DAE-B406-F324B80E9ADA

CUMMINS X15 EFFICIENCY SERIES

THE POWER TO SAVE.

If you want the power to save on your bottom line, then meet the Cummins X15 Efficiency Series – with up to a 3.5% fuel economy improvement over the 2017 model with base engine and powertrain optimization, and up to an additional 1.5% fuel economy improvement when selecting an EX rating package. EX ratings combine the X15 Efficiency Series that you've come to trust with the Endurant HD transmission and GPS data to deliver a fully optimized powertrain package. On top of the power to save, the Efficiency Series delivers excellent drivability and uptime that you can take straight to the bank.

THE POWER OF EX FEATURES.*

On-Ramp Boost: This Cummins-exclusive feature momentarily disables fuel-saving features and augments the shift calibration to deliver greater acceleration when you need it most.

Predictive Gear Shifting: Leverages GPS data to downshift before the hill to maintain uphill speed.

Predictive Engine Braking: Looks at the grade ahead and can engage engine brakes early to aid in maintaining the desired maximum speed.

Dynamic Power: Adjusts torque in order to make lighter vehicles operate similarly to heavier vehicles on grades. This provides fuel savings on lightly loaded vehicles by delivering consistent performance across varying loads.

**EX features require Endurant HD and GPS data. Availability of specific features varies by OEM.*

X15 EFFICIENCY SERIES SPECIFICATIONS

ADVERTISED HORSEPOWER	400 - 500 hp	298 - 373 kW
PEAK TORQUE	1450 - 1850 lb-ft	1966 - 2508 N • m
GOVERNED SPEED	1700 RPM	
CLUTCH ENGAGEMENT TORQUE	1000 lb-ft	1356 N • m
NUMBER OF CYLINDERS	6	
SYSTEM WEIGHT	3152 lb	1430 Kg
ENGINE (DRY)	2961 lb	1343 Kg
AFTERTREATMENT SYSTEM	191 lb	87 Kg

DocuSign Envelope ID: 58D06461-93FD-4DAE-B406-F324B80E9ADA

THE POWER TO DELIVER.

WORK GLOVES. HARD HAT. STEEL-TOED BOOTS.

X15 Productivity Series ratings are designed, built and optimized for vocational, specialty, multi-purpose and heavy-haul applications. Whether you're transporting raw materials in a quad-axle dump, moving 130,000 GVW down the interstate or need reliability in emergency applications, Cummins delivers the power you need – with torque to match.

Components have been carefully selected to match output characteristics and load demands. Ratings from 430-500 horsepower share proven hardware from the X15 Efficiency Series, while ratings from 565-605 hp utilize higher-capacity hardware from the X15 Performance Series.

Front-end PTO capability is another feature of the Productivity Series that makes these ratings the ideal choice for applications that require unique power demands.

With available ratings of up to 605 hp and 2050 lb-ft of peak toque, the X15 Productivity Series has the highest power output of any on-highway engine in North America, with a longer power curve than any engine in its class – making it the best choice for heavy-haul applications where having massive pulling power is the most mission-critical factor.

X15 PRODUCTIVITY SERIES SPECIFICATIONS

ADVERTISED HORSEPOWER	430 - 605 hp	321 - 451 kW
PEAK TORQUE	1650 - 2050 lb-ft	2237 - 2779 N • m
GOVERNED SPEED	2000 - 2100 RPM	
CLUTCH ENGAGEMENT TORQUE	1000 lb-ft	1356 N • m
NUMBER OF CYLINDERS	6	
SYSTEM WEIGHT	3152 lb	1430 Kg
ENGINE (DRY)	2961 lb	1343 Kg
AFTERTREATMENT SYSTEM	191 lb	87 Kg

DocuSign Envelope ID: 58D06461-93FD-4DAE-B406-F324B80E9ADA

THE POWER TO PERFORM.

What does it mean to have the power to perform? It means that your drivers brag about how powerful the engine under their hood is. We listened to customers who said they needed to pull heavy loads over mountainous terrain and we built the X15 Performance Series to deliver on that while not sacrificing uptime.

With ratings ranging from 525-565 hp with 1850-2050 lb-ft of torque available at 1000 rpm, the Performance Series ratings are optimized for premium and heavy long-haul customers.

The X15 Performance Series delivers more than just power and drivability. Rugged durability is ensured by the use of proven hardware while continuous improvements have resulted in reliability that provides peace of mind for trucking operations. Demand nothing less than the power to perform.

X15 PERFORMANCE SERIES SPECIFICATIONS

ADVERTISED HORSEPOWER	525-565 hp	391-451 kW
PEAK TORQUE	1850-2050 lb-ft	2508-2279 N • m
GOVERNED SPEED	1900 RPM	
CLUTCH ENGAGEMENT TORQUE	1000 lb-ft	1356 N • m
NUMBER OF CYLINDERS	6	
SYSTEM WEIGHT	3152 lb	1430 kg
ENGINE (DRY)	2961 lb	1343 kg
AFTERTREATMENT SYSTEM	191 lb	87 kg

DocuSign Envelope ID: 58D06461-93FD-4DAE-B406-F324B80E9ADA

PROVEN COMPONENTS. PROVEN TECHNOLOGY.

- **VGT Turbocharger –** Highly reliable and precise design for rapid acceleration
- **XPI Fuel System –** High pressure enables multiple injection events per cycle for industry-leading fuel economy and quieter operation
- **Single Module™ Aftertreatment System –** A compact and lightweight system that offers increased ash capacity for industry-leading Diesel Particulate Filter maintenance intervals of up to 800,000 miles and improved serviceability compared to modular systems
- **Fleetguard Fuel And Lube Filters –** Superior holding capacity provides better protection and enables longer service intervals
- **High-Capacity Electronic Control Module –** This allows full integration of data inputs from all subsystems, optimizing performance
- **Cummins Engine Brake –** With up to 600 braking horsepower, it's the most powerful in the industry. Stronger braking capacity reduces wear on service brakes and replacement costs

CUMMINS WARRANTY – CONFIDENCE IN WRITING.

The base engine warranty coverage* on Cummins X15 engines includes parts and labor on warrantable failures for both the engine and aftertreatment system – with no deductible. Cummins base warranty coverage is good for 2 years/250,000 miles (402,336 km).

Cummins wide variety of extended coverage plans allows you to make financial projections with complete confidence, with protection plans for up to 7 years or up to 600,000 miles (804,672 km) on registered parts and labor. Cummins extended coverage plans are available covering internal components and major engine systems, including the turbocharger, water pump and fuel injectors, air compressor, fuel pump and select engine sensors. New Protection Plan Plus and aftertreatment extended coverage plans allow customers to add coverage for additional components beyond what is covered by standard extended coverage plans.

*Covers defects in Cummins materials or factory workmanship.

KEEPING YOU ON THE ROAD. NOT IN THE BAY.

Cummins Care makes your workload easier by creating a seamless support experience. You can expect to get complete solutions while working with one of over 3,700 authorized parts and service locations. Visit care.cummins.com or call 1-800-CUMMINS™ (1-800-286-6467) to connect with a Cummins Care expert. The Cummins Guidanz™ mobile app and INLINE™ mini-adapter allow for key engine information to be downloaded on a smartphone or tablet. You don't even have to wait in line for a diagnostic bay to open – your vehicle's info can be downloaded while you stand right outside the cab. Cummins suite of Connected Solutions uses wireless technology to manage your engine's health. This includes Connected Diagnostics, our Connected Advisor program and Connected Software Updates that let you update engine control module calibrations over the air, from the road or wherever your trucks are domiciled.

Cummins Inc.
Box 3005
Columbus, IN 47202-3005
U.S.A.

1-800-CUMMINS™ (1-800-286-6467)
cummins.com

Bulletin 5600721 Produced in U.S.A. 4/21
©2021 Cummins Inc.

DocuSign Envelope ID: 58D06461-93FD-4DAE-B406-F324B80E9ADA

Ask for the Allison

RDS

RUGGED DUTY SERIES

Ask your truck dealer for a complete listing of vehicle models featuring Allison Rugged Duty Series transmissions, or contact your Authorized Allison Distributor. For the dealer close to you, visit **www.allisontransmission.com.**

Allison Transmission

P.O. Box 894, Speed Code PF3
Indianapolis, Indiana 46206-0894

1-800-252-5283

Information or specifications subject to change without notice or obligation.

SA3743EN (2003/10) Litho in U.S.A.
ISO/QS 9000 and ISO 14001 Certified

DocuSign Envelope ID: 58D06461-93FD-4DAE-B406-F324B80E9ADA

THE TRANSMISSION WITH A WORK ETHIC AS STRONG AS YOURS.

Think of the roughest job site. The most grueling route. The toughest terrain. Now think about how your trucks and your drivers are going to handle the challenge. If you've got the Allison Rugged Duty Series (RDS) automatic transmissions in your trucks, it's no sweat.

Introducing

RDS

RUGGED DUTY SERIES

DocuSign Envelope ID: 58D06461-93FD-4DAE-B406-F324B80E9ADA

Convert a fleet to the Allison RDS, and watch driver productivity soar. Drivers with Allison Automatic-equipped vehicles are able to make more deliveries per day (compared to AMT- or manual-equipped vehicles) because the Allison Automatic shortens route times.

In a recent USAC-sanctioned study* an Allison-equipped truck completed a typical delivery route 9% faster than a comparably equipped AMT truck. If a vehicle averages 10 stops a day, that is one extra stop per day and nearly four extra productive hours a week, per truck.

An increase in productivity.

Smart. Real smart.

The Allison RDS has brains in addition to its brawn. Optional electronic control packages provide precisely the performance features you need to get the job done.

Integrates PTO operation with the transmission system so you can command how and when the PTO engages. The ECU monitors operating conditions to minimize potential damage and hazards.

PTO ENABLE

When the PTO switch is open, the transmission will not shift into range. It's like an extra set of eyes – making sure there are no unwanted shifts out of Neutral when auxiliary equipment is in operation.

AUXILIARY FUNCTION RANGE INHIBIT

When the vehicle comes to a stop, the transmission's electronic controls automatically command to Neutral. The driver must re-select a moving range to shift out of Neutral.

AUTOMATIC NEUTRAL

Vocation	Additional Productivity Per Day	Average Revenue Per Stop	Additional Revenue Per Week	Additional Revenue Per Year
Construction Dump	One Stop	$55	$275	$13,200
Construction Mixer	One Stop	$250	$1,250	$60,000

The Allison RDS warranty covers 100% parts and labor with unlimited mileage. The 1000, 2100, 2200 and 2500 RDS have three-year standard coverage. The 3000, 3500, 4000, 4500 and 4700 RDS have two-year standard coverage. Extended Transmission Coverage (ETC) is available on all models at an additional cost.

A comprehensive warranty.

* USAC certified testing conducted on a city and highway course with two identical trucks, with the exception that one was equipped with an Allison Automatic and the other was equipped with an automated manual transmission. Your results may vary, depending upon driver and vehicles.

DocuSign Envelope ID: 58D06461-93FD-4DAE-B406-F324B80E9ADA

Ratings and Specifications

RATINGS

MODEL	RATIO	PARK PAWL	INPUT POWER[1]	INPUT TORQUE[1]	INPUT TORQUE W/SEM[1,2]	TURBINE TORQUE[3]	GVW	GCW
			hp (kW)	lb-ft (N • m)	lb-ft (N • m)	lb-ft (N • m)	lbs (kg)	lbs (kg)
1000 RDS	Close Ratio	Yes	340 (254)	550 (746)	565 (766)	850 (1152)	19,500 (8,845)	26,000 (11,800)
2100 RDS	Close Ratio	No	340 (254)	550 (746)	565 (766)	850 (1152)	26,000 (11,800)	26,000 (11,800)
2200 RDS	Close Ratio	Yes	340 (254)	550 (746)	565 (766)	850 (1152)	26,000 (11,800)	26,000 (11,800)
2500 RDS								
– On/Off Highway	Wide Ratio	No	300 (224)	550 (746)	565 (766)	850 (1152)	33,000 (15,000)	33,000 (15,000)
– Refuse	Wide Ratio	No	300 (224)	550 (746)	565 (766)	850 (1152)	24,200 (11,000)	–
3000 RDS								
– On/Off Highway	Close Ratio	–	370 (276)	1100 (1491)	–	1600 (2169)	80,000 (36,288)	80,000 (36,288)
– Refuse, Mixer	Close Ratio	–	350 (261)	960 (1300)	–	1575 (2135)	62,000 (28,123)	–
– Specialty PTO, HET	Close Ratio	–	370 (276)	1200 (1627)	–	1700 (2305)	–	–
3500 RDS								
– On/Off Highway	Wide Ratio	–	300 (224)	800 (1085)	–	1420 (1925)	80,000 (36,288)	80,000 (36,288)
– Refuse, Mixer	Wide Ratio	–	300 (224)	800 (1085)	–	1420 (1925)	60,000 (27,216)	–
– Specialty PTO, HET	Wide Ratio	–	315 (235)	950 (1288)	–	1450 (1966)	–	–
4000 RDS								
– On/Off Highway	Close Ratio	–	500 (373)	1550 (2102)	–	2450 (3322)	–	–
– Specialty PTO, HET	Close Ratio	–	540 (403)	1590 (2156)	–	2600 (3525)	–	–
4500 RDS								
– On/Off Highway	Wide Ratio	–	500 (373)	1550 (2102)	–	2450 (3322)	–	–
– Specialty PTO, HET	Wide Ratio	–	505 (377)	1550 (2102)	–	2600 (3525)	–	–
4700 RDS								
– On/Off Highway	Wide Ratio	–	500 (373)	1550 (2102)	–	2450 (3322)	–	–
– HET	Wide Ratio	–	540 (403)	1590 (2156)	–	2600 (3525)	–	–

1 Gross ratings as defined by ISO 1585 or SAE J1995. 2 SEM = engine controls with Shift Energy Management. 3 Turbine torque limit based on iSCAAN standard deductions.

ENGINE SPEEDS

BASE MODEL	FULL LOAD GOVERNED SPEED	IDLE SPEED IN DRIVE	OUTPUT SHAFT SPEED
	Min-Max (rpm)	Min-Max (rpm)	rpm
1000	2200-4600[1]	500-900	5000
2100/2200	2200-4600[1]	500-900	4500
2500	2200-4500[1]	500-800	3600[2]
3000	2000-2800	500-800	3600[2]
4000	1700-2300	500-800	–

1 Engines with full load governed speed greater than 3200 rpm require Application Engineering review. 2 Retarder-equipped models only.

GEAR RATIOS – TORQUE CONVERTER MULTIPLICATION NOT INCLUDED

MODEL	FIRST	SECOND	THIRD	FOURTH	FIFTH	SIXTH	SEVENTH	REVERSE
1000 RDS	3.10:1	1.81:1	1.41:1	1.00:1	0.71:1	–	–	-4.49:1
2100 RDS	3.10:1	1.81:1	1.41:1	1.00:1	0.71:1	–	–	-4.49:1
2200 RDS	3.10:1	1.81:1	1.41:1	1.00:1	0.71:1	–	–	-4.49:1
2500 RDS	3.51:1	1.90:1	1.44:1	1.00:1	0.74:1	–	–	-5.09:1
3000 RDS	3.49:1	1.86:1	1.41:1	1.00:1	0.75:1	0.65:1	–	-5.03:1
3500 RDS	4.59:1	2.25:1	1.54:1	1.00:1	0.75:1	0.65:1	–	-5.00:1
4000 RDS	3.51:1	1.91:1	1.43:1	1.00:1	0.74:1	0.64:1	–	-4.80:1
4500 RDS	4.70:1	2.21:1	1.53:1	1.00:1	0.76:1	0.67:1	–	-5.55:1
4700 RDS	7.63:1	3.51:1	1.91:1	1.43:1	1.00:1	0.74:1	0.64:1	-4.80:1

CITY COUNCIL AGENDA REPORT

INFORMATION/CONSENT AGENDA
AGENDA ITEM NO. L.3

DATE: November 21, 2023

TO: The City Council

FROM: Alexander Hamilton, Fire Chief, (805) 385-7700, alexander.hamilton@oxnard.org

SUBJECT: Authorize reappropriation of budgeted Measure O Funds in the amount of $102,000 to fund the replacement of a breathing air compressor at Fire Station One

RECOMMENDATION

That the City Council approve reappropriating a portion of funds ($102,000) budgeted for grant matches in Fiscal Year 2023-24 Measure O Fund (Fund 104) and the corresponding Capital Outlay Fund (301) to instead, utilize those funds to replace a 20-year-old breathing air compressor used in refilling firefighter self-contained breathing apparatuses (SCBA).

(This item did not originate in Committee.)

BACKGROUND

On December 7, 2022, the City Council authorized the Fire Department to submit seven (7) grant applications for Federal Emergency Management Agency (FEMA) Assistance to Firefighters Grants. The Fiscal Year 2023-24 adopted budget included $185,651 for local agency grant matches in Measure O Fund (Fund 104). Of the seven (7) federal grant applications, the Fire Department was awarded four (4) grants, requiring $82,934 in local agency grant matches. The Fire Department is requesting to utilize the balance of the budgeted funds in the amount of $102,000 for the purpose of replacing the high-pressure breathing air compressor at Fire Station One.

DISCUSSION

Firefighters often work in environments with poor air quality due to smoke and toxic fumes. SCBAs provide firefighters with a clean air supply, enabling them to breathe safely while working in hazardous conditions for an extended period of time. The breathing air fill station compressors take normal breathing air and pressurizes it for use in the SCBA tanks worn by firefighters. The compressor ensures that the SCBA tanks are continuously refilled with compressed clean air, allowing firefighters to maintain their air supply in hazardous environments. Currently, the Fire Department maintains two compressors at Fire Stations One and Eight. The compressor at Station One was purchased in 2003, 20 years ago, and is now beyond its useful life and experiencing mechanical failures that are increasingly difficult to source parts and expensive to repair. The Fire Department requires complete replacement of the unit. Breathing air fill stations are indispensable personal protective equipment for firefighters because they provide a continuous supply of clean, compressed air, ensuring firefighters' safety and quick response to emergencies.

There is currently no funding within the current Fire Department's operating budget in the General Fund to purchase the air compressor. If the reappropriation of Measure O Funds (and corresponding Capital Outlay Fund) is approved, the Fire Department will utilize the NPP Gov Cooperative Purchasing Agreement #PS20095 for the purchase of a BAUER Compressor in an amount not to exceed $102,000.

STRATEGIC PRIORITIES

This agenda item is a routine operational item or does not relate to the five strategic priorities adopted by City Council on March 16, 2021.

FINANCIAL IMPACT

The cost of the Bauer Compressor is $90,793.39 and will not exceed the $102,000 for the full cost of installation. If approved, funds in the amount of $102,000 will be reappropriated within the Measure O Fund (Fund 104) to fund the purchase and installation, as well as the corresponding transfer in and appropriation within the Capital Outlay Fund (Fund 301) in the same amount. A copy of the unexecuted contract, which does not require Council approval, is attached for reference only.

For Finance Use Only: Re-appropriate from Measure O Fund (Org. 1042501 Obj. 59800 Project M2403,04), Capital Outlay Fund (Org. 3012501 Obj. 49300 & 56040)

COMMITTEE OUTCOME

This item did not originate in Committee.

Prepared by: Rose Rodarte, Administrative Services Manager

ATTACHMENTS

1. CompressedAirSpecialties_Goods & Services Agreement 10.26

GOODS & SERVICE AGREEMENT
BETWEEN
THE CITY OF OXNARD AND COMPRESSED AIR SPECIALTIES, INC.

By This Goods & Services Agreement ("Agreement"), the CITY of Oxnard ("CITY") agrees to purchase certain goods and engage the services of Compressed Air Specialties, Inc. ("CONTRACTOR"), and CONTRACTOR agrees to supply the required goods and perform the services for CITY as herein described, for the compensation, during the term, and otherwise subject to the covenants and conditions herein set forth. CITY and CONTRACTOR may be individually referred to as "Party" or collectively as the "Parties."

1. SUMMARY DESCRIPTION OF THE GOODS AND SERVICES: Purchase and replacement of the air fill station compressor at Fire Station 1. The CITY will purchase the Bauer Unicus 4 Air Compressor System, cylinders and monitor (as stated in Quote Number 5616) to be delivered to CONTRACTOR to uncrate, test and fill storage cylinders. CONTRACTOR will then deliver it to the fire station for installation.

2. TERM OF THE AGREEMENT: From (Date): November 1, 2023 to June 30, 2024

3. AGREEMENT AMOUNT NOT TO EXCEED: $90,793.39

4. AGREEMENT EXHIBITS: The following documents memorialized below are the only exhibits to this agreement and are incorporated by reference as though fully set forth herein. In the event of a conflict between the Exhibits and this Agreement, the Agreement controls.

Exhibit A: Scope of Services
Exhibit B: Schedule of Compensation
Exhibit C: Insurance Requirements: Insurance Exhibit INS-I

5. GOODS. Subject to the terms and conditions set forth in this Agreement, Contractor shall provide to City the goods, materials, equipment or supplies and related Services as described in Exhibit A.

5.1 Contractor will not be compensated for goods, materials, equipment, or supplies and related services outside the scope of Exhibit A. Any Goods out the scope of Exhibit A are considered Additional Goods and before providing Additional Goods the following shall occur: (a) Contractor notifies City and City agrees that the Additional Goods are outside the scope of Exhibit A; (b) Contractor estimates the additional compensation required for these Additional Goods; and (c) City, after notice, approves in writing a Supplemental Addendum to this Agreement specifying the Additional Goods and the amount of additional compensation to be paid Contractor.

5.2 City will have no obligations whatsoever under this Agreement or any Supplemental Addendum, unless and until this Agreement or any Supplemental Addendum to this Agreement is approved by the City as required by the Oxnard City Code. As used in this Agreement, the term "Goods" includes both Goods and Additional Goods as applicable.

6. Facilities and Equipment. Except as set forth below, Contractor shall, at its sole cost and expense, furnish all facilities and equipment required for Contractor to perform this Agreement. City shall furnish to Contractor only the facilities and equipment listed below, if any.

CONTRACTOR will use current electrical supply for new compressor. No additional labor should be required. If additional electrical work is required it would be at the City of Oxnard's expense

7. Delivery and Inspection of Goods, Materials, Equipment or Supplies.

7.1. Delivery. Unless otherwise stated by the City in writing, delivery of Goods shall be made to the City address set forth in Exhibit A. All shipments are Free on Board (F.O.B.) destination with freight prepaid unless otherwise stated.

Contractor assumes full responsibility for all transportation scheduling and costs, including costs for containers, packing, handling, and insurance. The City reserves the right to request and receive a copy of the freight bill of lading on all purchases shipped F.O.B. prepaid and added.

Time is of the essence in the delivery. If delivery cannot be made as specified in Exhibit A or as otherwise stated by the City, Contractor shall notify the City immediately to request instructions on how to proceed and shall not make delivery before receipt of instructions. Periods of performance may be extended if, in the sole judgment of the City, the cause of delay justifies an extension.

7.2 Inspections. Goods will be inspected at the destination before acceptance by an authorized representative of the City for workmanship, appearance, proper functioning of all equipment and systems, and conformance to all other requirements of this Contract. The Goods shall be delivered to City free of any liens or encumbrances. Notwithstanding the requirements for any City inspection and testing at the destination and except where specialized inspections or testing are specified for performance solely by the City, Contractor shall perform or have performed the inspections or tests required to substantiate that all Goods provided under the Contract conform to the drawings, specifications, and other Contract requirements, including, if applicable, the technical requirements for the manufacturer's part number(s) specified.

7.3 Deficiencies. If deficiencies in the Goods are discovered, Contractor shall correct and redeliver the Goods for re-inspection and acceptance. The period for payment and/or commencement of discount period (if applicable) does not begin until corrective action is complete. The cost of storing rejected Goods and the cost for shipping rejected Goods back to the Contractor or point of origin shall be paid by Contractor.

7.4 Inspection of Facilities. If requested by the City, Contractor shall provide the City with an inspection tour of Contractor's facilities where any Goods will be designed, manufactured, or assembled by Contractor.

8. Title/Risk of Loss. Title, ownership, and risk of loss or damage of the Goods remains with the Contractor until the Goods are delivered to, inspected, and accepted by the City, except when the loss or damage is due to the sole negligence of the City.

9. Payment & Compensation. The total of all fees paid to the Contractor for the provision of Goods and Services as set forth in Exhibit A, including any authorized reimbursable expenses, shall not exceed the total sum of $100,000. The payments specified under this Agreement shall be the only payments made to Agreement unless the City approves a supplemental addendum or Agreement.

9.1 The City shall pay all undisputed portions of any applicable invoice within forty-five (45) days after receipt of an invoice. In the event the City disputes one or more items in an invoice, the City shall, within forty-five (45) days after receipt of such invoice, notify the Contractor of the item(s) being disputed and the reason(s) therefore. The City may withhold payment for such disputed items until resolution of the dispute.

9.2 Contractor shall submit a payment request to City by the end of each calendar month listing the Goods and Services provided, costs of those Goods and Services, and total amount due for the month. Invoices may be emailed to: invoices@oxnardFD.org.

9.2.1 Contractor is responsible for supplying all documentation necessary to verify invoices to the City's satisfaction.

9.2.2 All invoices submitted by Contractor must contain the following information:

(1) Job/Project Name
(2) City's current Purchase Order Number
(3) Contractor's Invoice Number
(4) Date of Invoice Issuance
(5) Work Order Number (if applicable)
(6) City representative identified on the Purchase Order
(7) Contractor's remit address
(8) Itemized description of items billed under Invoice
(9) Itemized description of all authorized Reimbursable Expenses
(10) Itemized description of all applicable taxes (sales, use, excise, etc.)
(11) Amount of Invoice (itemize all authorized Reimbursable Expenses)
(12) Total Billed to Date under Agreement (if applicable)

9.2.3 Items must be separated into Goods, Services, and Reimbursable Expenses. All applicable sales, use, excise, or similar taxes, including federal excise tax, must be itemized separately on the invoice. Invoices that do not conform to the format outlined above will be returned to Contractor for correction. City is not responsible for delays in payment to Contractor resulting from Contractor's failure to comply with the invoice format described above.

9.3 Contractor's Reimbursable Expenses. "Reimbursable Expenses" are limited to actual expenditures of Contractor for expenses that are necessary for the proper satisfaction of the Agreement and are only payable if specifically authorized in advance in writing by the City.

9.4 Miscellaneous Charges. No additional charges will be allowed unless specified in the Contract, including charges for transportation, fuel, containers, packing, or disposal.

9.5 Price Adjustments for Goods. Unless otherwise stated, prices are maximum for the term of the Contract. Price adjustments, if allowed under this Contract, must be requested in writing and accompanied by the required information to substantiate the request for price adjustment, as set forth in the Contract. Any allowable request for price adjustment must be delivered to the City at least 30 days before the adjusted prices become effective. No price adjustment allowable under this Contract will be granted retroactively. The City must also be given the benefit of any decline in prices. If any price increase is granted by the City, the increase shall not be greater than 3% from the prior year.

9.6 Purchase Orders. Unless otherwise stated, a purchase order will be issued to the Contractor on behalf of the City. Purchase orders will cite the quantity of Goods or Services requested, the purchase amount, and time of performance. If the time of performance of this Contract extends beyond the close of the City's fiscal year, another purchase order may be issued. No purchase order supersedes any provision of this Contract. Contractor shall not deliver Goods or provide Services until Contractor receives a purchase order or other written notification by the City.

9.7 Additional Goods. Additional Goods shall be provided only when a Supplemental Addendum to this Agreement authorizing the Additional Goods is approved in writing by the City in accordance with the City's Agreement amendment procedures. The City reserves the right to perform any Additional Services with its own staff or to retain other contractors to perform the Additional Services.

9.8 Billing Disputes. The burden of proof shall be on the Contractor to establish the accuracy of its invoices. Upon presentation and verification of the information provided by Contractor, the City will review all records and make a final determination and present its finding to Contractor.

9.9 Accounting Records of Contractor. During performance of this Agreement and for a period of three years after completion of performance, Contractor shall maintain all accounting and financial records related to this Agreement, in accordance with generally accepted accounting practices, including records of Contractor's costs for performance under this Agreement and records of Contractor's Reimbursable Expenses. Contractor shall keep and make records available for inspection and audit by representatives of the City upon reasonable written notice.

9.10 Sales Tax Requirements. The City is not exempt from paying sales tax. Sales tax must be shown on the invoice as a separate line item.

10. Funding Availability. This Agreement is subject to the budget and fiscal provisions of the City. The City's payment obligation under this Agreement will not exceed the amount of funds appropriated and approved for this Agreement by the Oxnard City Council. This Section shall govern over any other contrary provision of the Agreement.

11. Designated Representatives. The Designated Representatives listed below shall be authorized to act on behalf of the named Party, be responsible for negotiations and contractual matters, and coordinate with each other to perform the services under this Agreement.

CITY Designated Representative:	CONTRACTOR Designated Representative:
Name: John Cecena	Name: Shawn Townsend
Title: Battalion Chief	Title: CAS Representative
Phone: 805-603-5512	Phone: 714-991-8800
Email: john.cecena@oxnard.org	Email: shawntownsend@compairspec.com
Mailing Address (if differs from above):	Mailing Address: 1340S. Simpson Circle, Anaheim CA 92806-5531

12. Notices. All notices given or required to be given pursuant to this Agreement shall be in writing and may be given by personal delivery or by first-class mail. Notice sent by mail shall be addressed to each Party's Designated Representative as set forth above in Section 11. When addressed in accordance with this Section, such notice shall be deemed given upon deposit in the United States mail, postage prepaid. In all other instances, notices shall be deemed given at the time of actual delivery. Changes may be made in the names or addresses of persons to whom notices are to be given by giving notice in the manner prescribed in this Section.

13. Insurance. Contractor shall, at its sole cost and expense, obtain and maintain during the performance of this Agreement, the insurance coverage described in Exhibit D, attached and incorporated herein by this reference. Insurance must be issued by a company satisfactory to the City's Risk Manager. Contractor shall, before performance under this Agreement, file with the Risk Manager evidence of insurance coverage as specified in Exhibit D. Failure to maintain or renew insurance coverage or to provide renewal evidence shall be considered a material breach of this Agreement.

14. Indemnification. Notwithstanding the limits of any insurance, Contractor shall indemnify City, its officials, officers, agents, volunteers and employees against, and will hold and save each of them harmless from, any and all actions, suits, claims, damages to persons or property, losses, costs, penalties, obligations, errors, omissions or liabilities, (herein "claims or liabilities") that may be asserted or claimed by any person, firm or entity arising or alleged to arise out of or in connection with the negligent performance of the work, operations or activities of Contractor, its agents, employees, subcontractors, or invitees, provided for herein, or arising or alleged to arise from the negligent acts or omissions of Contractor hereunder, or arising or alleged to arise from Contractor's negligent performance of or failure to perform any term, provision, covenant or condition of this Agreement, but excluding such claims or liabilities or portion of such claims or liabilities arising or alleged to arise from the negligence or willful misconduct of the City its officials, officers, agents, volunteers or employees, and in connection therewith:

a. Contractor will defend any action or actions filed in connection with any of said claims or liabilities and will pay all costs and expenses, including legal costs and attorneys' fees incurred in connection therewith;

b. Contractor will promptly pay any judgment rendered against the City, its officials, officers, agents or employees for any such claims or liabilities arising or alleged to arise out of or in connection with Contractor's (or its agents', employees', subcontractors' or invitees') negligent performance of or failure to perform such work, operations or activities hereunder; and Contractor agrees to save and hold City, its officials, volunteers, officers, agents, and employees harmless therefrom;

c. In the event the City, its officials, officers, agents, volunteers or employees is made a party to any action or proceeding filed or prosecuted against Contractor for such damages or other claims arising or alleged to arise out of or in connection with the negligent performance of or failure to perform the work, operation or activities of Contractor hereunder, Contractor shall pay to City, its officials, volunteers officers, agents or employees, any and all costs and expenses incurred by the City, its officers, agents or employees in such action or proceeding, including but not limited to, legal costs and attorneys' fees for counsel acceptable to the City.

This Section shall survive the termination of this Agreement. Contractor shall require the same indemnification from all subcontractors.

15. Ownership of Contractor's Work Product, Confidentiality & Disclosure.

15.1 City shall have full ownership and control, including ownership of any copyrights, of all information prepared, produced, or provided by Contractor under this Contract. In this Contract, the term "information" means and includes: any and all work product, submittals, reports, plans, specifications, and other deliverables consisting of documents, writings, handwritings, typewriting, printing, photo sharing, photographing, computer models, and any other computerized data and every other means of recording any form of information, communications, or representation, including letters, works, pictures, drawings, sounds, or symbols, or any combination thereof. Contractor shall not be responsible for any unauthorized modification or use of such information for other than its intended purpose by City.

15.2 All proprietary and other information received from Contractor by City, whether received in connection with Contractor's proposal to City or in connection with Contractor's performance, will be disclosed upon receipt of a request for disclosure, in accordance with the California Public Records Act; provided, however, that, if any information is set apart and clearly marked "trade secret" when it is provided to City, City shall give notice to Contractor of any request for the disclosure of such information. The Contractor will then have five days from the date it receives notice to petition the court for a protective order to prevent the disclosure of the information. The Contractor shall have sole responsibility for defense of the actual "trade secret" designation of such information.

15.3 Contractor shall fully defend, indemnify and hold harmless City, its officers and employees, and each of them, from and against any and all claims, actions, lawsuits or other proceedings alleging that all or any part of the information prepared, produced, or provided by Contractor under this Contract infringes upon any third party's trademark, trade name, copyright, patent or other intellectual property rights. City shall make reasonable efforts to notify Contractor not later than ten days after City is served with any such claim, action, lawsuit or other proceeding. However, City's failure to provide notice within the ten-day period does not relieve Contractor of its obligations hereunder, which survive any termination or expiration of this Contract.

15.4 The parties understand and agree that any failure by Contractor to respond to the notice provided by City and seek a protective order, in accordance with the provisions of subsection 15.2, above, constitutes a complete waiver by Contractor of any rights regarding the information designated "trade secret" by Contractor, and the information will be disclosed by City in accordance with the Public Records Act.

15.5 Contractor shall not disclose, publish, or authorize others to disclose or publish, design data, drawings, specifications, reports, or other information pertaining to the projects assigned to Contractor by the City or other information to which the Contractor has had access during the term of this Agreement without the prior written approval of the City's Designated Representative during the term of this Agreement and for a period of two (2) years after the termination of this Agreement.

15.6 Other than an obligation upon the City to deal in good faith, the City makes no warranties and shall bear no liability or responsibility for errors or omissions in any Confidential Information disclosed under this Agreement or for any business decisions made by Contractor in reliance on any Confidential Information disclosed under this Agreement.

16. Independent Contractor. Contractor is and shall at all times remain, as to City, a wholly independent contractor. Neither City nor any of its employees or agents shall have control over the conduct of Contractor or any of its employees, except as stated in this Agreement. Contractor has and shall retain the right to exercise full control over the employment, direction, means of performance, location, compensation and discharge of all persons assisting Contractor. This Agreement shall not be interpreted to prevent or preclude Contractor from rendering any services for Contractor's own account or to any other person or entity as Contractor in its sole discretion shall determine; provided, however, that performing such services shall not materially interfere with the Services the Contractor shall perform for the City. The City retains the right to provide general instructions to and observe the Contractor in the performance of all services done on behalf of the City.

Contractor and its employees and agents have no authority, express or implied, to act on behalf of City in any capacity, to incur any debt, obligation or liability on behalf of City, bind City in any manner, or otherwise act on behalf of City as an agent. Contractor and its employees are not employees of City. Contractor and its employees are not entitled to receive from City any of the benefits or rights afforded employees of City, including but not limited to reserve leave, sick leave, vacation leave, holiday leave, compensatory leave, Public Employees Retirement System benefits, and health, life, dental, long-term disability and workers' compensation insurance benefits. Contractor shall not, at any time or in any manner, represent that it or any of its agents or employees are in any manner agents or employees of City.

17. Conflict of Interest. Contractor covenants that it does not have any interest, nor shall it acquire any interest, directly or indirectly, which would conflict in any manner with the performance of Contractor's services under this Agreement. Contractor further covenants that in the performance of services under this Agreement, no officer, employee or agent of Contractor having such interest shall be employed by it. In the event the City determines that Contractor must disclose its financial interests by completing and filing a Fair Political Practices Commission Form 700, Statement of Economic Interests, Contractor shall file

such Form 700 with the City Clerk's Office pursuant to the written instructions provided by the City Clerk. Acquisition or maintenance of a conflicting interest by Contractor may result in termination of this Agreement by the City.

18. Confidentiality of City Information. During performance of this Agreement, Contractor may gain access to and use City information regarding inventions, machinery, products, prices, apparatus, costs, discounts, future plans, business affairs, governmental affairs, processes, trade secrets, technical matters, systems, facilities, customer lists, product design, copyright, data, and other vital information (hereafter collectively referred to as "City Information") that are valuable, special and unique assets of the City. Contractor agrees to protect all City Information and treat it as strictly confidential, and further agrees that Contractor shall not at any time, either directly or indirectly, divulge, disclose or communicate in any manner any City Information to any third party without the City's prior written consent.

In addition, Contractor must comply with all City policies governing the use of the City network and technology systems. A violation by Contractor of this section is a material violation of this Contract and shall justify legal and equitable relief.

19. Notice of Breach and Opportunity to Cure. Neither Party will be in breach of this Agreement where the breach is capable of being cured, or until written notice of the breach is received from the non-breaching Party. The Party charged with breach will have fifteen (15) calendar days from the date of receiving such notice in which to cure the breach or otherwise respond. If the circumstances leading to the charge that the Agreement was breached have not been cured or explained to the satisfaction of the other Party within fifteen (15) days from the date on which the breaching Party received notice of breach, the non-breaching Party may terminate this Agreement.

20. Default by Contractor. In case of default by the Contractor, the City reserves the right to procure the Goods or Services from other sources and deduct from any monies due, or that may thereafter become due to the Contractor, the difference between the price named in this Contract and the actual cost to the City to procure from an alternate source. Prices paid by the City will be considered the prevailing market price at the time such purchase is made.

21. Termination of Agreement. The City shall have the right to terminate this Contract upon fifteen (15) calendar day's written notice pursuant to Section 12. Such termination shall be effective on the date specified in the notice, or if no date is specified, then fifteen (15) calendar days from the date of the notice. Upon receipt of such notice, Contractor shall immediately cease performance under this Contract as specified in the notice and deliver all information prepared under this Contract to the City. The City shall pay Contractor the reasonable value of Goods or Services provided by Contractor before termination; provided, however, City shall not in any manner be liable for lost profits that might have been made by Contractor had the Contract not been terminated or had Contractor completed performance required by this Contract. Contractor shall furnish to the City any financial information requested by the City to determine the reasonable value of the Goods or Services provided by Contractor. The foregoing is cumulative and does not affect any right or remedy that City may have in law or equity.

22. Guarantee and Warranty. Contractor assumes design responsibility and warrants the articles to be free from design defect and suitable for the purposes intended by City. If it is determined by the City that the Goods and Services do not meet the minimum requirements of this Contract, the Contractor shall correct the same at Contractor's sole expense.

22.1 The Contractor agrees that the Goods and Services furnished under this Contract will be covered by the industry standard or better warranty.

22.2 Contractor further warrants that the Goods and Services furnished under this Contract will be covered by the most favorable commercial warranties the Contractor gives to any customer for the Goods and Services and that the rights and remedies provided herein are in addition to and do not limit any rights afforded to the City at law or equity, or by any other clause of this Contract.

22.3 Any additional warranties provided by law, including the warranty of merchantability and warranty of fitness for a particular purpose will remain in full force and effect and inure to the City's benefit. City reserves all rights and remedies provided by law for breach of any applicable warranty related to the Goods and Services.

22.4 City's inspections, approval, acceptance, or payment for all or part of any Goods and Services will in no way affect City's warranty rights.

23. Contractor Not Agent. Except as City may specify in writing, Contractor and Contractor's personnel have no authority, express or implied, to act on behalf of City in any capacity whatsoever as an agent. Contractor and Contractor's personnel shall have no authority, express or implied, to bind City to any obligations whatsoever.

24. Governing Law. The terms of this Agreement shall be interpreted according to the laws of the State of California. Should litigation occur, venue shall be in the Superior Court of California, County of Ventura.

25. Severability. If any portion of this Agreement is declared by a court of competent jurisdiction to be invalid or unenforceable, then such portion will be deemed modified to the extent necessary in the opinion of the court to render such portion enforceable and, as so modified, such portion and the balance of this Agreement will continue in full force and effect and be enforceable.

26. Entire Agreement. This Contract, including all Exhibits and documents referenced herein, contains the entire agreement between the parties and supersedes whatever oral or written understanding they may have had before the execution of this Contract. No alteration to the terms of this Contract shall be valid unless approved in writing by Contractor, and by City, in accordance with applicable provisions of the Sacramento City Code.

27. Waiver. Neither the City's acceptance of, or payment for, any Goods or Services, nor any waiver by either party of any default, breach or condition precedent, will be construed as a waiver of any provision of this Contract, nor as a waiver of any other default, breach or condition precedent or any other right hereunder. No waiver will be effective unless it is in writing and signed by the waiving party.

28. Assignment Prohibited. The expertise and experience of Contractor are material considerations for this Contract. City has a strong interest in the qualifications and capability of the persons and entities that will fulfill the obligations imposed on Contractor under this Agreement. In recognition of this interest, Contractor shall not assign any right or obligation pursuant to this Contract without the written consent of the City. Any attempted or purported assignment without City's written consent shall be void and of no effect.

29. Authority to Execute. Each Party hereto expressly warrants and represents that through its Designated Representative it has the authority to execute this Agreement on behalf of its corporation, partnership, business entity, or governmental entity, and warrants and represents that the Designated Representative has the authority to bind each Party to the performance of its obligations hereunder.

30. Execution – Counterparts. This Agreement may be executed in any number of counterparts and each such duplicate counterpart shall constitute an original, but they shall not be effective nor enforceable unless and until it is executed with the handwritten signature of an authorized representative of each of the relevant Parties. No counterpart shall be deemed to be an original or presumed delivered unless and until the counterpart executed by the other Party to this Agreement is in the physical possession of the Party seeking enforcement thereof.

31. Acknowledgement. By signing below, Contractor acknowledges that it has reviewed the CITY's Goods & Services Agreement terms and conditions and insurance requirements and that Contractor hereby agrees to full compliance.

[Signatures on next page]

In witness whereof, the Parties have entered into this Agreement on the date as written in section 3 and upon signature of all Parties.

CITY OF OXNARD

Jennifer Yates, [1]
Purchasing Manager

Date

[CONTRACTOR]

Shawn Townsend
CAS Representative

Date

APPROVED AS TO FORM:

Stephen M. Fischer, CITY Attorney (always required)

Date

[1] The Purchasing Agent may execute any authorized agreement up to $200,000.

EXHIBIT A
SCOPE OF SERVICES

Project Overview
Purchase and delivery of Bauer high pressure breathing air compressor for refilling firefighter SCBA's used by Oxnard Fire Department.

Project Scope
New compressor installation. To include:

- New Bauer Unicus 4S Air Compressor System
  - 18 cfm, 6,000 psi, 15 hp, 2 year warranty
  - Electronic CO monitor - per Cal/OSHA
  - (4) ASME air storage cylinders with Cal/OSHA stamping/certification
- Compressor will be delivered to CONTRACTOR to uncrate, test and fill storage cylinders. CONTRACTOR will then bring to Fire Station 1 with a forklift if necessary for installation.
- Removal and disposal of current Bauer UNII25H-E3 air compressor
- Installation of new Bauer unit in place of old unit.
- Note: Customer is responsible for providing a wall mounted electrical disconnect box for us to connect to.
- CAS will use current electrical supply for new compressor. No additional labor should be required. If additional electrical work is required it would be at the City of Oxnard's expense.
- Training of staff on operation of new unit

Project Management
All work to be managed by Shawn Townsend of Compressed Air Specialties.

Schedule Summary
Installation date to be determined by Bauer when order is received

EXHIBIT B
SCHEDULE OF COMPENSATION

Qty	Item	Description	U/M	Price	Amount
1	UN4S/18H-E3	Bauer Unicus 4 Air Compressor System 18 cfm, 6,000 psi, 15 hp, 230/460 vac, 3 phase, (2) integrated ASME code storage cylinders, (3) position 5,500 psi containment fill station	ea	79,818.00	79,818.00T
2	/CYL-9/6k	Additional 6,000 psi ASME cylinder	ea	4,900.00	9,800.00T
1	GT/CO/III	Electronic Carbon Monoxide Monitor with calibration kit	ea	4,331.00	4,331.00T
		Subtotal			93,949.00
	15%	15% Discount		-15.00%	-14092.35
1	Shipping - Unicus	Shipping - Unicus	ea	3,300.00	3,300.00
1	Labor	Installation Labor	hr	250.00	250.00
	----	Note: Compressor will be delivered to CAS to uncrate, test and fill storage cylinders. CAS will then bring to your facility with a forklift if necessary for installation. Customer is responsible for providing a wall mounted electrical disconnect box for us to connect to. A training class will be provided to personnel on proper filling procedures. Includes removal and disposal of current system		0.00	0.00T

Quotation Valid through January 2024

Subtotal	$83,406.65
Sales Tax (9.25%)	$7,386.74
Total	$90,793.39

EXHIBIT C

Exhibit INS-I

INSURANCE REQUIREMENTS FOR VENDORS (WHO DELIVER, INSTALL OR MAINTAIN PRODUCTS)

1. Vendor shall obtain and maintain during the performance of any services under this Agreement the following insurance against claims for injuries to persons or damages to property which may arise from or in connection with the sale and delivery, installation or maintenance of products by vendor, its agents, representatives, or employees.

a. Commercial General Liability Insurance, including Contractual Liability, in an amount not less than $1,000,000 combined single limit for bodily injury and property damage for each claimant for general liability with coverage equivalent to Insurance Services Office Commercial General Liability Coverage (Occurrence Form CG 0001). If a general aggregate limit is used, that limit shall apply separately to the project or shall be twice the occurrence amount;

b. Business Automobile Liability Insurance in an amount not less than $1,000,000 combined single limit for bodily injury and property damage for each claimant for automobile liability with coverage equivalent to Insurance Services Office Automobile Liability Coverage (Occurrence Form CA0001) covering Code No. 1, "any auto;"

c. Workers' Compensation Insurance in compliance with the laws of the State of California, and Employer's Liability Insurance in an amount not less than $1,000,000 per claimant. Additionally, the workers' compensation policy shall include a waiver of all rights of subrogation which the insurer may have against the City.

2. Vendor shall, prior to performance of any services, file with the Risk Manager certificates of insurance with original endorsements effecting coverage required by this Exhibit INS-I. The certificates and endorsements for each insurance policy are to be signed by a person authorized by that insurer to bind coverage on its behalf. The certificates and endorsements are to be on the attached forms or on other forms approved by the Risk Manager. All certificates and endorsements are to be received and approved by the Risk Manager before work commences. City reserves the right to require complete certified copies of all required insurance policies at any time. The certificates of insurance and endorsements shall be sent via email. If you have not received your request or are having difficulty with electronic upload, contact insurance@oxnard.org

3. Vendor agrees that all insurance coverages shall be provided by a California admitted insurance carrier with an A.M. Best rating of A:VII or better and shall be endorsed to state that coverage may not be suspended, voided, canceled by either party, or reduced in coverage or limits without 30 days' prior written notice to the Risk Manager. The Risk Manager shall not approve or accept any endorsement if the endorsement contains "best effort" modifiers or if the insurer is relieved from the responsibility to give such notice.

4. Vendor agrees that the Commercial General Liability and Business Automobile Liability Insurance policies shall be endorsed to name City, its City Council, officers, employees and volunteers as additional insureds as respects: liability arising out of activities performed by or on behalf of vendor; products and completed operations of vendor; premises owned, occupied or used by vendor; or automobiles owned, leased, hired or borrowed by vendor. The coverage shall contain no special limitations on the scope of protection afforded to City, its City Council, officers, employees and volunteers. **The General Liability Special Endorsement Form and Automobile Liability Special Endorsement Form attached to this Exhibit INS-I or substitute forms containing the same information and acceptable to the Risk Manager shall be used to provide the endorsements (ISO form CG 2010 11/85 or if not available, CG 2010 with an edition date prior to 01/04 <u>and</u> CG 2037).**

5. The coverages provided to City shall be primary and not contributing to or in excess of any existing City insurance coverages **(this must be endorsed)**. Additionally, the workers' compensation policy shall include a waiver of all rights of subrogation which the insurer may have against the City. Any failure to comply with reporting provisions of the policies shall not affect coverage provided to City, its City Council, officers, employees and volunteers. The insurance shall apply separately to each insured against whom claim is made or suit is brought, except with respect to the limits of the insurer's liability.

6. Any deductibles or self-insured retentions must be declared to and approved by the Risk Manager. At the option of the Risk Manager, either the insurer shall reduce or eliminate such deductibles or self-insured retentions as respects City, its City Council, officers, employees and volunteers, or the vendor shall procure a bond guaranteeing payment of losses and related investigations, claim administration and defense expenses.

INSTRUCTION FOR SUBMITTING INSURANCE CERTIFICATES AND ENDORSEMENT FORMS

Certificates of Insurance

The sample accord form on the following page is provided to facilitate your preparation and submission of certificates of insurance. You may use this or any industry form that shows coverage as broad as that shown on the attached sample. **Please note the certificate holder address must be as shown on the attached sample accord form with the contract number and insurance exhibit identification information completed.** Improperly addressed certificates may delay the contract start-up date because the City's practice is to return unidentifiable insurance certificates to the insured for clarification as to the contract number. **Cancellation provisions must be endorsed to the policy. Modifying the certificate does not change coverage or obligate the carrier to provide notice of cancellation.**

Endorsement Forms

Original endorsements are required for commercial general liability and business automobile liability insurance policies and must be attached to the applicable certificate of insurance. City preference is that you use the endorsement forms which are attached. Substitute forms will be accepted, however, as long as they include provisions comparable to the attached.

INS-I.doc

ACORD CERTIFICATE OF INSURANCE

ISSUE DATE (MM/DD/YY)

PRODUCER

THIS CERTIFICATE IS ISSUED AS A MATTER OF INFORMATION ONLY AND CONFERS NO RIGHTS UPON THE CERTIFICATE HOLDER. THIS CERTIFICATE DOES NOT AMEND, EXTEND OR ALTER THE COVERAGE AFFORDED BY THE POLICIES BELOW.

CODE SUB-CODE

COMPANIES AFFORDING INSURANCE COVERAGE

INSURED

COMPANY LETTER A SPECIFY COMPANY NAMES IN THIS SPACE

COMPANY LETTER B

COVERAGES

THIS IS TO CERTIFY THAT THE POLICIES OF INSURANCE LISTED BELOW HAVE BEEN ISSUED TO THE INSURED NAMED ABOVE FOR THE POLICY PERIOD INDICATED, NOTWITHSTANDING ANY REQUIREMENT, TERM OR CONDITION OF ANY CONTRACT OR OTHER DOCUMENT WITH RESPECT TO WHICH THIS CERTIFICATE MAY BE ISSUED OR MAY PERTAIN, THE INSURANCE AFFORDED BY THE POLICIES DESCRIBED HEREIN IS SUBJECT TO ALL THE TERMS, EXCLUSIONS AND CONDITIONS OF SUCH POLICIES. LIMITS SHOWN MAY HAVE BEEN REDUCED BY PAID CLAIMS.

CO LTR	TYPE OF INSURANCE	POLICY NUMBER	POLICY EFFECTIVE DATE (MM/DD/YY)	POLICY EXPIRATION DATE (MM/DD/YY)	LIMITS	
A	**GENERAL LIABILITY** [x] COMMERCIAL GENERAL LIABILITY [x] CLAIMS MADE [x] OCCUR. [x] OWNER'S & CONTRACTOR'S PROT.				GENERAL AGGREGATE PRODUCTS COMP/OP AGG. PERSONAL & ADV. INJURY EACH OCCURRENCE FIRE DAMAGE (Any one fire) MED. EXPENSE (Any one person)	$1,000,000 $1,000,000 $1,000,000 $1,000,000 $ $
A	**AUTOMOBILE LIABILITY** [x] ANY AUTO ALL OWNED AUTOS SCHEDULED AUTOS HIRED AUTOS NON-OWNED AUTOS GARAGE LIABILITY				COMBINED SINGLE LIMIT BODILY INJURY (Per person) BODILY INJURY (Per accident) PROPERTY DAMAGE	$1,000,000 $ $ $
A	**EXCESS LIABILITY** UMBRELLA FORM OTHER THAN UMBRELLA FORM				EACH OCCURRENCE AGGREGATE	$ $
A	**WORKERS' COMPENSATION AND EMPLOYERS' LIABILITY**				STATUTORY LIMITS EACH ACCIDENT DISEASE-POLICY LIMIT DISEASE-EACH EMPLOYEE	 $1,000,000 $1,000,000 $1,000,000
A	**OTHER**					

DESCRIPTION OF OPERATIONS/LOCATIONS/VEHICLES/RESTRICTIONS/SPECIAL ITEMS

CERTIFICATE HOLDER

CITY OF OXNARD % Evident ID, Inc.
8520 Allison Pointe Blvd. Ste 223
PMB 5210
Indianapolis, Indiana 462500-4299 US

CANCELLATION
SHOULD ANY OF THE ABOVE DESCRIBED POLICIES BE CANCELED BEFORE THE EXPIRATION DATE THEREOF, THE ISSUING COMPANY WILL ~~ENDEAVOR TO~~ MAIL 30 DAYS WRITTEN NOTICE TO THE CERTIFICATE HOLDER NAMED TO THE LEFT. ~~BUT FAILURE TO MAIL SUCH NOTICE SHALL IMPOSE NO OBLIGATION OR LIABILITY OF ANY KIND UPON THE COMPANY, ITS AGENTS OR REPRESENTATIVES.~~

AUTHORIZED REPRESENTATIVE

SAMPLE

GENERAL LIABILITY SPECIAL ENDORSEMENT
FOR THE CITY OF OXNARD (the "City")

SUBMIT IN DUPLICATE

ENDORSEMENT NO.	ISSUE DATE (MM/DD/YY)

PRODUCER

Telephone:

NAMED INSURED

POLICY INFORMATION:
Insurance Company:
Policy No.:
Policy Period: (from) (to)
LOSS ADJUSTMENT EXPENSE ☐ Included in Limits
☐ In Addition to Limits

☐ Deductible ☐ Self-Insured Retention (check which) of $ _____
with an Aggregate of $_____ applies to _____
coverage. ☐ Per Occurrence ☐ Per Claim (which)

APPLICABILITY This insurance pertains to the operations, products and/or tenancy of the named insured under all written agreements and permits in force with the City unless checked here ☐ in which case only the following specific agreements and permits with the City are covered:

CITY AGREEMENTS/PERMITS

TYPE OF INSURANCE

GENERAL LIABILITY
☐ COMMERCIAL GENERAL LIABILITY
☐ COMPREHENSIVE GENERAL LIABILITY
☐ OWNERS & CONTRACTORS PROTECTIVE

☐ Claims Made
Retroactive Date _____
☐ Occurrence

OTHER PROVISIONS

COVERAGES	LIABILITY LIMITS IN THOUSANDS $ EACH OCCURRENCE	AGGREGATE
☐ GENERAL		
☐ PRODUCTS/COMPLETED OPERATIONS		
☐ PERSONAL & ADVERTISING INJURY		
☐ FIRE DAMAGE		
☐ _____		
☐ _____		

Underwriter=s representative for claims pursuant to this insurance.
CLAIMS:
Name: _____
Address: _____
_____
Telephone: ( ) _____

In consideration of the premium charged and notwithstanding any inconsistent statement in the policy to which this endorsement is attached or any endorsement now or hereafter attached thereto, insurance company agrees as follows:

1. **INSURED.** The City, its officers, agents, employees and volunteers are included as insureds with regard to liability and defense of suits arising from the operations, products and activities performed by or on behalf of the named insured.
2. **CONTRIBUTION NOT REQUIRED.** As respects: (a) work performed by the named insured for or on behalf of the City; or (b) products sold by the named insured to the City; or (c) premises leased by the named insured from the City, the insurance afforded by this policy shall be primary insurance as respects the City, its officers, agents, employees or volunteers; or stand in an unbroken chain of coverage excess of the named insured's scheduled underlying primary coverage. In either event, any other insurance maintained by the City, its officers, agents, employees or volunteers shall be in excess of this insurance and shall not contribute with it.
3. **SEVERABILITY OF INTEREST.** This insurance applies separately to each insured against whom claim is made or suit is brought except with respect to the company's limits of liability. The inclusion of any person or organization as an insured shall not affect any right which such person or organization would have as a claimant if not so included.
4. **CANCELLATION NOTICE.** With respect to the interests of the City, this insurance shall not be canceled, or materially reduced in coverage or limits except after thirty (30) days prior written notice by receipted delivery has been given to the City.
5. **PROVISIONS REGARDING THE INSURED'S DUTIES.** Any failure to comply with reporting provisions of the policy or breaches or violations of warranties shall not affect coverage provided to the City, its officers, agents, employees or volunteers.
6. **SCOPE OF COVERAGE.** This policy, if primary, affords coverage at least as broad as:
   a. Insurance Services Office Commercial General Liability Coverage, "occurrence" form CG0001; or
   b. If excess, affords coverage which is at least as broad as the primary insurance form CG0001.

Except as stated above nothing herein shall be held to waive, alter or extend any of the limits, conditions, agreements or exclusions of the policy to which this endorsement is attached.

ENDORSEMENT HOLDER

CITY OF OXNARD % Evident ID, Inc.
8520 Allison Pointe Blvd. Ste 223
PMB 5210
Indianapolis, Indiana 462500-4299 US

AUTHORIZED REPRESENTATIVE
☐ Broker/Agent ☐ Underwriter ☐ _____

I _____ (print/type name), warrant that I have authority to bind the above-mentioned insurance company and by my signature hereon do so bind this company to this endorsement.

Signature _____
(original signature required)

Telephone: ( ) Date Signed _____

AUTOMOBILE LIABILITY SPECIAL ENDORSEMENT
FOR THE CITY OF OXNARD (the "City")

SUBMIT IN DUPLICATE

ENDORSEMENT NO.	ISSUE DATE (MM/DD/YY)

PRODUCER

Telephone:

NAMED INSURED

POLICY INFORMATION:
Insurance Company:
Policy No.:
Policy Period: (from) (to)
LOSS ADJUSTMENT EXPENSE ☐ Included in Limits
☐ In Addition to Limits

☐ Deductible ☐ Self-Insured Retention (check which) of $ _____
with an Aggregate of $_____ applies to _____
coverage. ☐ Per Occurrence ☐ Per Claim (which)

APPLICABILITY. This insurance pertains to the operations, products and/or tenancy of the named insured under all written agreements and permits in force with the City unless checked here ☐ in which case only the following specific agreements and permits with the City are covered:

CITY AGREEMENTS/PERMITS

TYPE OF INSURANCE

☐ COMMERCIAL AUTO POLICY
☐ BUSINESS AUTO POLICY
☐ OTHER

OTHER PROVISIONS

LIMIT OF LIABILITY

$ _____ per accident, for bodily injury and property damage.

CLAIMS: Underwriter's representative for claims pursuant to this insurance.
Name: _____
Address: _____
Telephone: (____) _____

In consideration of the premium charged and notwithstanding any inconsistent statement in the policy to which this endorsement is attached or any endorsement now or hereafter attached thereto, insurance company agrees as follows:

1. **INSURED.** The City, its officers, agents, volunteers and employees are included as insureds with regard to liability and defense of suits arising from the operations, products and activities performed by or on behalf of the named insured.
2. **CONTRIBUTION NOT REQUIRED.** As respects: (a) work performed by the named insured for or on behalf of the City; or (b) products sold by the named insured to the City; or (c) premises leased by the named insured from the City, the insurance afforded by this policy shall be primary insurance as respects the City, its officers, agents, employees or volunteers; or stand in an unbroken chain of coverage excess of the named insured's scheduled underlying primary coverage. In either event, any other insurance maintained by the City, its officers, agents, employees or volunteers shall be in excess of this insurance and shall not contribute with it.
3. **SEVERABILITY OF INTEREST.** This insurance applies separately to each insured against whom claim is made or suit is brought except with respect to the company's limits of liability. The inclusion of any person or organization as an insured shall not affect any right which such person or organization would have as a claimant if not so included.
4. **CANCELLATION NOTICE.** With respect to the interests of the City, this insurance shall not be canceled, or materially reduced in coverage or limits except after thirty (30) days prior written notice by receipted delivery has been given to the City.
5. **PROVISIONS REGARDING THE INSURED'S DUTIES.** Any failure to comply with reporting provisions of the policy or breaches or violations of warranties shall not affect coverage provided to the City, its officers, agents, employees or volunteers.
6. **SCOPE OF COVERAGE.** This policy, if primary, affords coverage at least as broad as:
   a. Insurance Services Office Automobile Liability Coverage, "occurrence" form CA0001, code ("any auto"); or
   b. If excess, affords coverage which is at least as broad as the primary insurance form referenced in the preceding section (1).

Except as stated above nothing herein shall be held to waive, alter or extend any of the limits, conditions, agreements or exclusions of the policy to which this endorsement is attached.

ENDORSEMENT HOLDER

CITY OF OXNARD % Evident ID, Inc.
8520 Allison Pointe Blvd. Ste 223
PMB 5210
Indianapolis, Indiana 462500-4299 US

AUTHORIZED REPRESENTATIVE

☐ Broker/Agent ☐ Underwriter ☐ _____

I _____ (print/type name), warrant that I have authority to bind the above-mentioned insurance company and by my signature hereon do so bind this company to this endorsement.

Signature _____
(original signature required)

Telephone: ( ) Date Signed _____

CITY COUNCIL AGENDA REPORT

INFORMATION/CONSENT AGENDA
AGENDA ITEM NO. L.4

DATE: November 21, 2023

TO: City Council

FROM: Stephen Fischer, City Attorney, (805) 385-7483, stephen.fischer@oxnard.org

SUBJECT: Ordinance of the City Council Prohibiting Single-Use Plastic Foodware

RECOMMENDATION

That the City Council adopt the Ordinance No. 3033 entitled: "Ordinance of the City Council of the City of Oxnard, California Amending Article XXIV of Chapter 7 of the Oxnard City Code Prohibiting the Use and Distribution of Single-Use Plastic Foodware."

(This item is exempt from CEQA pursuant to Title 14 of the California Rules of Regulation section 15061(b)(3))

(Public Works and Transportation Committee approved 3-0)

BACKGROUND

On July 28, 2022, the City Council adopted Ordinance No. 3017, which Restricted the Distribution of Single-Use Foodware Accessories and Standard Condiments. The ordinance was adopted in response to Assembly Bill ("AB") No. 1276, which required Cities to pass an ordinance regulating the use and distribution of single-use foodware and required that food facilities only distribute single-use foodware such as utensils, stirrers, splash sticks, condiment packets and plastic straws when requested by a consumer. In order to comply with AB 1276, the City was required to pass an ordinance prohibiting the distribution of single-use foodware. This ordinance regulated how single-use foodware accessories that are commonly made of plastic are distributed but did not ban the use.

On June 30, 2022, California Governor Gavin Newsom signed Senate Bill ("SB") No. 54 into law. SB 54 established the Plastic Pollution Prevention and Packaging Producer Responsibility Act, authorizing CalRecycle to create and implement new recyclability and compostability standards for plastic packaging. SB 54 requires the City to collect and recycle or compost materials CalRecycle identifies as recyclable and compostable and designates as a "covered material" pursuant to Public Resource Code section 42041(e)(1)(A) and (B)(i) and (ii). CalRecycle is slated to publish a list of covered materials by January 1, 2024. Once the list of covered materials is published the City is obligated to recycle or compost all the covered material including single-use plastic foodware. The City may file for an extension or exemption with CalRecycle that may relieve the City from recycling certain covered materials.

The City's Del Norte Refuse and Recycling Facility, similar to many others in the waste industry, does not have existing machinery that can recycle single-use plastic foodware. However, the extension and exemption may not relieve the City of its obligations with respect to single-use plastics under SB 54. However, SB 54 does provide authority for a local jurisdiction, such as the City, to pass an ordinance prohibiting the use and distribution of single-use plastic foodware items in the City. The passage of an ordinance prohibiting the use of single-use plastic foodware relieves the City of its obligation to recycle single-use plastic foodware and from having to navigate the exemption and or extension options provided to local jurisdictions under SB 54.

A prohibition of single-use plastic foodware will have environmental benefits, because single-use plastic foodware is not currently processable at local waste collection facilities and therefore is sent to the landfill where it is slow to degrade,

leach chemicals into the environment, and breaks down into microplastics that negatively affect local wildlife and marine animals.

DISCUSSION

Amending sections of Article XXIV of Chapter 7 of the Oxnard City Code to ban the use and distribution of single-use plastic foodware at food facilities to help reduce local plastic debris in our community and help further the City's goals under the City's Climate Action Adaptation Plan (CAAP).

Materials to be Included in the Proposed Ordinance

This Ordinance will apply to all single-use plastic foodware as defined below:

Plastic - Means a synthetic or semisynthetic material chemically synthesized by the polymerization of organic substances that can be shaped into various rigid and flexible forms, and includes coatings and adhesives."Plastic" includes, without limitation, polyethylene terephthalate (PET), high density polyethylene (HDPE),polyvinyl chloride (PVC), low density polyethylene (LDPE), polypropylene (PP), polystyrene (PS), polylactic acid(PLA), and aliphatic biopolyesters, such as polyhydroxyalkanoate (PHA) and polyhydroxybutyrate (PHB). "Plastic"does not include natural rubber or naturally occurring polymers such as proteins or starches.

Plastic Foodware - Means single-use foodware made partially or entirely of plastic. Plastic foodware is neither compostable or recyclable.

Single Use - Means designed to be used once and then discarded, and not designed for repeated use and sanitizing.

Exemptions to the Proposed Ordinance

This Ordinance makes the following exemptions for single-use plastic foodware products from the provisions of this article:

1. Correctional institutions, which have the same meaning as in Cal. Penal Code, Section 7502.
2. Health care facilities licensed pursuant to Cal. Health and Safety Code, Article 1 (commencing with Section 1250) of Chapter 2 of Division 2 or facilities that are owned or operated by a health care service plan licensed pursuant to Cal. Health and Safety Code, Chapter 2.2 (commencing with Section 1340) of Division 2.
3. Residential care facilities licensed pursuant to Cal. Health and Safety Code, Division 2 (commencing with Section 1200).

Businesses Subject to the Ordinance

This Ordinance will apply to Food Facilities, which is defined in accordance with California Health and Safety Code section 113789, which states that a "Food facility" is an operation that stores, prepares, packages, serves, vends, or otherwise provides food for human consumption at the retail level, including, but not limited to, the following: (1) An operation where food is consumed on or off the premises, regardless of whether there is a charge for the food; and (2) A place used in conjunction with the operations described in this subdivision, including, but not limited to, storage facilities for food-related utensils, equipment, and materials. Additionally, a Food facility includes permanent and nonpermanent food facilities.

Ordinance Implementation/Enforcement

This Ordinance will take effect January 1, 2024. However, enforcement actions under the ordinance will not begin until January 1, 2025, to allow time for outreach to the impacted businesses and organizations, and coordination with the City's Community Development, Code Compliance and Environmental Resources departments. This period will also allow businesses and organizations to use previously purchased non-compliant product(s) and receive information about resources for compliant products. This enforcement date of the Ordinance is consistent with the requirements of SB54.

Food facilities will not be cited for violations until January 1, 2025. Upon a first violation, the City shall issue a written

Notice of Violation to the offending establishment, person or business. If, after the specified correction period, the violation is not ceased or abated, violators of the Ordinance would be subject to the fine structure in Section 7-345(B), where first and second violations of this article will result in notice of violations and any subsequent violation shall constitute an infraction punishable by a fine of $25 for each day in violation, but not to exceed $300 annually. Any further violation of the Ordinance may be subject to administrative action pursuant to the procedures set forth in Article III of Chapter 7 and based on the City's schedule of fines.

Community Outreach

The goal of the City's outreach is to help businesses find affordable, compliant products that work for their business needs. City staff and volunteers will help to ensure that the transition away from single-use plastic foodware is as smooth and affordable as possible for the business community. City staff will develop resources to help businesses, and provide one-on-one assistance as needed. Staff will also engage with the local organizations, business community, and non-profit organizations with different outreach methods including social media, mailers, meetings, and door to door conversations with affected businesses.

STRATEGIC PRIORITIES

This agenda item supports the Infrastructure and Natural Resources strategy. The purpose of the Infrastructure and Natural Resources strategy is to preserve and improve our roads, utilities, parks, trees, water supply and natural resources through effective planning, prioritization, and an equitable and efficient use of available funding.

FINANCIAL IMPACT

There is no financial impact.

COMMITTEE OUTCOME

The Public Works and Transportation Committee approved 3-0 on October 24, 2023 to approve the staff recommendation and to forward the item for Council approval.

Prepared by: Michelle McCarron, Assistant City Attorney

ATTACHMENTS

1. Ordinance 3033
2. Presentation Single Use Plastics

CITY COUNCIL OF THE CITY OF OXNARD

ORDINANCE NO. 3033

ORDINANCE OF THE CITY COUNCIL OF THE CITY OF OXNARD, CALIFORNIA AMENDING ARTICLE XXIV OF CHAPTER 7 OF THE OXNARD CITY CODE PROHIBITING THE USE AND DISTRIBUTION OF SINGLE-USE PLASTIC FOODWARE

WHEREAS, California Governor Gavin Newsome signed Senate Bill ("SB") 54 into law on June 30, 2022; and

WHEREAS, SB 54 established the Plastic Pollution Prevention and Packaging Producer Responsibility Act, authorizing CalRecycle to create and implement new recyclability and compostability standards for plastic packaging; and

WHEREAS, under SB 54 the City is required to collect and recycle or compost materials CalRecycle identifies as recyclable and compostable ("covered materials"); and

WHEREAS, CalRecycle's deadline to publish this list of recyclable and compostable materials is January 1, 2024; and

WHEREAS, the City is not required to collect any covered material that the City prohibits via ordinance by January 1, 2024; and

WHEREAS, single-use plastic foodware cannot be recycled locally at this time; and

WHEREAS, prohibiting the use or distribution of certain covered material within the City will reduce the amount of covered material that the City's environmental resources division has to process; and

WHEREAS, single-use plastic foodware is frequently used by restaurants and food establishments, including mobile food trucks/vehicles/food vendors, street and sidewalk vendors, and outdoor food sales, as containers for take-out food orders or for leftover food after dining; and

WHEREAS, in January of this year the City adopted an ordinance prohibiting the use, manufacture, and distribution of expanded polystyrene ("EPS") foodware; and

WHEREAS, many cities throughout California have adopted ordinances prohibiting or restricting the distribution of single-use plastic foodware, requiring cost-effective reusable, recyclable, and/or compostable alternatives be used instead; and

WHEREAS, the City intends to enact policies and ordinances in furtherance of the Plastic Pollution Prevention and Packaging Producer Responsibility Act.

NOW, THEREFORE, THE CITY COUNCIL OF THE CITY OF OXNARD DOES ORDAIN AS FOLLOWS:

Part 1. Incorporation of Recitals. The findings and determinations reflected above are true and correct, and are incorporated by this reference as though fully set forth herein as the cause and foundation for the action taken by and through this Ordinance.

Part 2. Codified Amendment. The City Clerk is directed to request that the publisher of the City Code add thereto the amendments listed in Parts 3, 4, 5 and 6 of this Ordinance to Chapter 7, Article XXIV as set forth below.

Part 3. Section 7-342 of the City Code is hereby amended to read as follows: The following definitions are added alphabetically as subsections (B), (D), (H) and (I) and, with the following subsections re-lettered accordingly as set forth below:

"(A) AB 1276 - The California State Assembly Bill regulating the distribution of single-use foodware accessories by food vendors to be made available only upon request of the consumer.

(B) SB 54 – The California Senate Bill entitled the Plastic Pollution Prevention and Packaging Producer Responsibility Act requires local jurisdiction to either recycle or prohibit the distribution of certain covered materials, which include but are not limited to single use plastic food ware.

(C) CONSUMER - Has the same meaning as in Cal. Health and Safety Code, Section 113757.

(D) COVERED MATERIAL – Has the same meaning as in Public Resources Code, Section 42041(e)(1)(A) and (B)(i) and (ii).

(E) FOOD FACILITY - Has the same meaning as in Cal. Health and Safety Code, Section 113789.

(F) READY-TO-EAT FOOD - Has the same meaning as in Cal. Health and Safety Code, Section 113881.

(G) REFILLABLE SELF-SERVICE DISPENSER - A container or equipment that is used to hold disposable foodware accessories for customers to obtain at their discretion.

(H) PLASTIC - means a covered material that is a synthetic or semisynthetic material chemically synthesized by the polymerization of organic substances that can be

shaped into various rigid and flexible forms, and includes coatings and adhesives. "Plastic" includes, without limitation, polyethylene terephthalate (PET), high density polyethylene (HDPE),polyvinyl chloride (PVC), low density polyethylene (LDPE), polypropylene (PP), polystyrene (PS), polylactic acid(PLA), and aliphatic biopolyesters, such as polyhydroxyalkanoate (PHA) and polyhydroxybutyrate (PHB). "Plastic" does not include natural rubber or naturally occurring polymers such as proteins or starches.

(I) PLASTIC FOODWARE - means single-use foodware made partially or entirely of plastic.

(J) SINGLE-USE - Designed to be used once and then discarded, and not designed for repeated use and sanitizing.

(K) SINGLE-USE FOODWARE ACCESSORY - All of the following single-use items provided alongside ready-to-eat food:

(1) Utensils, which are defined as forks, knives, spoons, sporks, and chopsticks.

(2) Condiment cups and packets.

(3) Straws.

(4) Stirrers.

(5) Splash sticks.

(6) Cocktail sticks.

(7) Containers, including but not limited to bowls, plates, and trays.

(8) Cups and cup lids.

(L) STANDARD CONDIMENT - Relishes, spices, sauces, confections, or seasonings that require no additional preparation and that are usually used on a food item after preparation, including ketchup, mustard, mayonnaise, soy sauce, hot sauce, salsa, salt, pepper, sugar, and sugar substitutes.

(M) THIRD-PARTY FOOD DELIVERY PLATFORM - Has the same meaning as in Cal. Health and Safety Code, Section 113930.5.**"**

Part 4. Section 7-343 of the City Code is hereby amended as follows: The section title has been changed, subsections (A) and (B) are added, and the following subsections re-lettered accordingly as set forth below:

"SEC. 7-343. REQUIREMENTS FOR FOOD FACILITIES.

(A) No food facility shall use or distribute any single-use plastic foodware within the City of Oxnard.

(B) Food facilities within the City of Oxnard may only use and distribute non-plastic foodware in accordance with this section.

(C) Except as provided in divisions **(E)** and **(F)**, a food facility, for on-premises dining or when using a third-party food delivery platform, **shall not provide any plastic foodware, and** shall not provide any single-use foodware accessory or standard condiment packaged for single use to a consumer unless the single-use foodware accessory or standard condiment is requested by the consumer.

(D) Single-use foodware accessories and standard condiments packaged for single use provided by food facilities for use by consumers shall not be bundled or packaged in a manner that prohibits a consumer from taking only the type of single-use foodware accessory or standard condiment desired without also having to take a different type of single-use foodware accessory or standard condiment.

(E) A food facility may ask a drive-through consumer if the consumer wants a single-use foodware accessory if the single-use foodware accessory is necessary for the consumer to consume ready-to-eat food, or to prevent spills of or safely transport ready-to-eat food.

(F) A food facility that is located entirely within a public use airport, as defined in Section 77.3 of Title 14 of the Code of Federal Regulations, may ask a walk-through consumer if the consumer wants a single-use foodware accessory if the single-use foodware accessory is necessary for the consumer to consume ready-to-eat food, or to prevent spills of or safely transport ready-to-eat food.

(G) (1) A third-party food delivery platform shall provide consumers with the option to request single-use foodware accessories or standard condiments from a food facility serving ready-to-eat food.

(2) If a food facility uses any third-party delivery platform for ready-to-eat food, the food facility shall customize its menu with a list of available single-use foodware accessories and standard condiments, and only those single-use foodware accessories or standard condiments selected by the consumer shall be provided by the food facility. If a consumer does not select any single-use foodware accessories or standard condiments, no single-use foodware accessory or standard condiment shall be provided by the food facility for delivery of ready-to-eat food.

(H) Nothing in this section shall prohibit a food facility from making unwrapped single-use foodware accessories available to a consumer using refillable self-service dispensers that dispense one item at a time to allow for single-use foodware accessories to be obtained.

(I) Nothing in this section shall prohibit a food facility from making standard condiments available to a consumer using refillable self-service dispensers to allow for standard condiments to be obtained. A food facility that offers standard condiments is encouraged to use bulk dispensers for the condiments rather than condiments packaged for single use.

(J) Nothing in this section shall prevent a city, county, city and county, or other local public agency from adopting and implementing an ordinance or rule that would further restrict a food facility or a third-party food delivery platform from providing single-use foodware accessories or standard condiments to a consumer.

(K) A food facility is encouraged, but not required, to take actions in addition to the requirements of this section that support a goal of reducing the use of and waste generated by all single-use food service products.**"**

Part 5. Section 7-344(B)(4) of the City Code is hereby amended as follows:

"(4) Public and private school cafeterias, as referenced in Cal. Health and Safety Code, Section 113789(b)(1), **are partially exempt from this Article with the exception of Section 7-343 subparagraphs (A) and (B)."** .

Part 6. Section 7-345 of the City Code is hereby amended to add subparagraph (F) as set forth below:

"(F) Enforcement of violations involving single-use plastic foodware will begin on January 1, 2025."

Part 7. This ordinance is exempt from the California Environmental Quality Act under section 15061(b)(3), because the activity is covered by the general rule that CEQA applies only to projects which have the potential for causing a significant effect on the environment. Where it can be seen with certainty that there is no possibility that the activity in question may have a significant effect on the environment, the activity is not subject to CEQA.

Part 8. Severability. If any section, subsection, subdivision, sentence, clause, phrase, or portion of this Ordinance or the application thereof to any person or place, is for any reason held to be invalid or unconstitutional by the final decision of any court of competent jurisdiction, the remainder of this Ordinance shall remain in full force and effect.

Part 9. Pursuant to Cal. Gov. Code Section 36933(c)(1), the City Attorney was designated to prepare, and the City Clerk published, a summary of this ordinance, and a certified copy of the ordinance was posted in the Office of the City Clerk a minimum of five days before the City Council's adoption of the ordinance.

Part 10. The City Clerk shall certify as to the adoption of this ordinance and shall cause the summary thereof to be published within fifteen (15) days of the adoption and shall post a certified copy of this ordinance, including the vote for and against the same, in the office of the

City Clerk, in accordance with Government Code Section 36933. Ordinance No. 3033 was first read on November 7, 2023, and finally adopted on November 21, 2023, to become effective January 1, 2024.

APPROVED AND ADOPTED this 21st day of November, 2023, by the following vote:

AYES:

NOES:

ABSENT:

ABSTAIN:

_____
John C. Zaragoza, Mayor

ATTEST:

_____
Rose Chaparro, City Clerk

APPROVED AS TO FORM:

_____
Stephen M. Fischer, City Attorney

Ordinance to Prohibit Single-Use Plastic Foodware

Chelsey Ballot, Deputy City Attorney
City Attorney Office

City Council
11/21/2023

CITY OF OXNARD CALIFORNIA

Recommendation

That the City Council adopt the ordinance entitled: "Ordinance of the City Council of the City of Oxnard, California Amending Article XXIV of Chapter 7 of the Oxnard City Code Prohibiting the Use and Distribution of Single-Use Plastic Foodware."

(This item is exempt from CEQA pursuant to Title 14 of the California Rules of Regulation section 15061(b)(3))

Background

- June 30, 2022 - Governor Gavin Newsom signed Senate Bill (“SB”) 54, establishing the Plastic Pollution Prevention and Packaging Producer Responsibility Act.
  - SB 54 requires the City to collect and recycle or compost materials CalRecycle identifies as recyclable and compostable and designates as a "covered material" pursuant to Public Resource Code section 42041(e)(1)(A) and (B)(i) and (ii).
  - SB 54 provides local jurisdictions, such as the City, authority to pass an ordinance prohibiting the use and distribution of single-use plastic foodware items in the City.

Background

- A City ordinance prohibiting the use of single-use plastic foodware relieves the City of its obligation to recycle single-use plastic foodware.

- Prohibiting single-use plastic foodware will have environmental benefits.

Discussion

- This Ordinance will apply to all single-use plastic foodware as defined below:
  - Plastic - Means a synthetic or semisynthetic material chemically synthesized by the polymerization of organic substances that can be shaped into various rigid and flexible forms, and includes coatings and adhesives.“Plastic” includes, without limitation, polyethylene terephthalate (PET), high density polyethylene (HDPE),polyvinyl chloride (PVC), low density polyethylene (LDPE), polypropylene (PP), polystyrene (PS), polylactic acid(PLA), and aliphatic biopolyesters, such as polyhydroxyalkanoate (PHA) and polyhydroxybutyrate (PHB). “Plastic”does not include natural rubber or naturally occurring polymers such as proteins or starches.

Discussion

- Plastic Foodware - Means single-use foodware made partially or entirely of plastic. Plastic foodware is neither compostable or recyclable.

- Single Use - Means designed to be used once and then discarded, and not designed for repeated use and sanitizing.

Exemptions

- This Ordinance makes the following exemptions for single-use plastic foodware:
  - Correctional institutions, which has the same meaning as in Cal. Penal Code, Section 7502.
  - Health care facilities licensed pursuant to Cal. Health and Safety Code, Article 1 (commencing with Section 1250) of Chapter 2 of Division 2 or facilities that are owned or operated by a health care service plan licensed pursuant to Cal. Health and Safety Code, Chapter 2.2 (commencing with Section 1340) of Division 2.
  - Residential care facilities licensed pursuant to Cal. Health and Safety Code, Division 2 (commencing with Section 1200).

Businesses Subject to the Ordinance

- Food Facilities - as defined in Cal. Health and Safety Code Section 113789 is an operation that stores, prepares, packages, serves, vends, or otherwise provides food for human consumption at the retail level, including, but not limited to, the following: (1) An operation where food is consumed on or off the premises, regardless of whether there is a charge for the food; and (2) A place used in conjunction with the operations described in this subdivision, including, but not limited to, storage facilities for food-related utensils, equipment, and materials. Additionally, a Food facility includes permanent and nonpermanent food facilities.

Implementation and Enforcement

- This Ordinance will take effect January 1, 2024, however enforcement actions under the ordinance will not begin until January 1, 2025, to allow time for outreach to the impacted businesses and organizations, and coordination with City's Community Development, Code Compliance and Environmental Resources departments.

- This period will also allow businesses and organizations to use previously purchased non-compliant product(s) and receive information about resources for compliant products.

- This enforcement date of the Ordinance is consistent with the requirements of SB54.

Community Outreach

- The goal of the City's outreach is to help businesses find affordable compliant products that work for their business needs.

- Staff will engage with local organizations, business community, and non-profit organizations with different outreach methods including social media, mailers, meetings, and door to door conversations with affected businesses.

Strategic Priorities

This agenda item supports the Infrastructure and Natural Resources strategy. The purpose of the Infrastructure and Natural Resources strategy is to preserve and improve our roads, utilities, parks, trees, water supply and natural resources through effective planning, prioritization, and an equitable and efficient use of available funding.

CITY OF
OXNARD
CALIFORNIA

QUESTIONS?

CITY COUNCIL AGENDA REPORT

REPORTS
AGENDA ITEM NO. M.1

DATE: November 21, 2023

TO: City Council

FROM: Jeff Pengilley, Community Development Director, (805) 385-8208, jeff.pengilley@oxnard.org

SUBJECT: Commercial Cannabis Financial Auditing Services Agreement with Avenu Insights & Analytics, LLC (10 minutes).

RECOMMENDATION

That the City Council approve and authorize the Mayor to execute a 3-year agreement (with an option for two 1-year extensions) (Agreement No. 3240018) with Avenu Insights & Analytics, LLC. ("Avenu"), in an amount not to exceed $570,000 for commercial cannabis financial auditing services.

(The Finance and Governance Committee approved 2-0 (Council member Basua absent) on October 24, 2023 to approve the staff recommendation and to forward the item for Council approval.)

Please click the following link to view the required Measure M pre-recorded presentation video:
https://youtu.be/qFoNxUzFZ4A

BACKGROUND

The Oxnard City Code (OCC) allows the following cannabis uses: retail dispensaries (16 licenses); manufacturing (8 licenses); distribution (3 licenses); and testing laboratories (1 license). The OCC requires that after one full year of being in operation, all cannabis businesses will be subject to an annual audit. Based upon the OCC audit requirements and the timing associated with the opening of two retail cannabis operators (The Artist Tree and Releaf on Vine), two retail cannabis businesses will be required to submit an audit of their annual financial revenues in December 2023. The audit is required to be prepared by an independent certified public accountant, procured by the cannabis applicant, and submitted to the City for review and approval.

Given that the City does not have the technical expertise to audit cannabis business, in February 2023, the City issued a Request for Proposals (RFP) for cannabis auditing services. The City received a total of seven (7) proposals. Based upon the criteria identified in the RFP, City staff evaluated the proposals and selected three (3) firms to interview. Avenu was selected as the most qualified to perform the work due to their overall experience providing cannabis auditing services to other municipal organizations (see Attachment 1). The scope associated with the cannabis audit review will include: verification of tax payments reported by cannabis businesses to the City and the California Department of Tax and Fee Administration (CDTFA), verification of the annual community benefits payment, verification of the ownership associated with each commercial cannabis business and an evaluation of each commercial cannabis businesses assets and liabilities.

On June 20, 2023, through a compliance fee study, the City established a Cannabis Compliance Fee (Ordinance No.3029), which included the cannabis permit renewal fee. In addition to the renewal fee, each cannabis business will be responsible for paying the City's cost to procure the review of the cannabis audit, plus the City's 15% administrative fee. The audit will be submitted when the applicant renews their permit. It is possible that a cannabis permit may be renewed pending securing an approved cannabis audit. The renewal process includes steps to secure approval of an audit post renewal of a cannabis permit.

The City negotiated the contract term with Avenu to provide commercial cannabis business audit services for 3-years (with an option for two 1-year extensions) at a fixed cost of $7,500 per audit and a not-to-exceed total contract amount of $570,000. The contract maximum was established with the assumption that the cannabis program and business opening would gradually increase over the next five years in alignment with the number of cannabis businesses allowed under the OCC. Through implementation of the cannabis program, including audit outcomes, it is possible that audit frequency may change. The City continues to evaluate the cannabis program, looking for ways to streamline the process, and facilitate business development. Any OCC changes, including changes in the frequency of the audit, would occur through an amendment to the OCC.

STRATEGIC PRIORITIES

This agenda item supports Economic Development strategy. The purpose of the Economic Development strategy is to focus on the retention and expansion of Oxnard businesses by increasing the skills and employability of our local workforce, invite new business investments, and target site-based redevelopment opportunities.

FINANCIAL IMPACT

The estimated cost of the contract over five years (including an option for two 1-year extensions) and the corresponding revenue is as follows:

FISCAL YEAR	EST. COST	EST. REVENUE (INC. 15% ADMIN FEE)
FY 2023-24	$22,500	$25,875
FY 2024-25	$82,500	$94,875
FY 2025-26	$120,000	$138,000
FY 2026-27	$172,500	$198,375
FY 2027-28	$172,500	$198,375

There is sufficient FY2023-24 funding available from the existing Community Development operating budget. Funding of future years as well as anticipated revenue will be included in the recommended budget of each fiscal year.

For Finance Use Only: General Fund (Org. 1014101 Obj. 41450 & 53200)

COMMITTEE OUTCOME

The Finance & Governance Committee approved 2-0 (Council member Basua absent) on October 24, 2023 to approve the staff recommendation and to forward the item for Council approval. There were no public comments on this agenda item. Committee members asked about the origins of the required audit fee and the application to the OCC.

Prepared by: Kathleen Mallory, Planning & Sustainability Manager

ATTACHMENTS

1. Agreement No. 3240018 with Avenu Insights & Analytics, LLC
2. Committee Staff Report 10.24.23
3. November 21, 2023 Presentation

PROFESSIONAL SERVICES AGREEMENT
BETWEEN
THE CITY OF OXNARD AND AVENU INSIGHTS & ANALYTICS, LLC

By This Professional Services Agreement ("Agreement"), the CITY of Oxnard ("CITY") agrees to engage the services of Avenu Insights & Analytics, LLC ("CONSULTANT"), and CONSULTANT agrees to perform the services for CITY as herein described, for the compensation, during the term, and otherwise subject to the covenants and conditions herein set forth. CITY and CONSULTANT may be individually referred to as "Party" or collectively as the "Parties."

1. SUMMARY DESCRIPTION OF SERVICES. Cannabis Financial Audit Services

This Agreement is for "on call" or "as needed" services as identified in Exhibit A-Scope of Services. The City does not guarantee that any services will be requested under this agreement or that any services requested under this agreement will reach the agreement amount listed in section 4. All "on call" or "as needed" services requested by the City shall be paid at the rates identified in Exhibit B-Rate and Cost Sheet.

2. PARTIES.

CITY of Oxnard ("CITY"), a general law and municipal corporation of the State of California, located at 300 West Third Street, Oxnard California 93030

Avenu Insights & Analytics, LLC ("CONSULTANT"), a corporation/LLC/LLP of the State of California, located at 5860 Trinity Parkway, Suite 120, Centerville, VA 20120

3. TERM OF AGREEMENT: From October 1, 2023 to September 30, 2026

3.1 Time is of the essence in this Agreement.

3.2 Any Optional Extension (initial term, plus any option to extend) shall not exceed a total of five (5) years. The CITY in its sole discretion may exercise the optional extension upon 60 days written notice to the CONSULTANT in accordance with Section 11 of this Agreement. CONSULTANT shall issue its written consent to the CITY's exercise of the option extension within 10 days of receipt of notice from the CITY. All Notices shall comply with section 20 of this Agreement.

3.3 The CITY shall have the option for (2) two consecutive (1) one-year extensions, in accordance with the scope of work and general terms and conditions of the CONSULTANT/Professional Services Agreement.

3.4 All services required of CONSULTANT under this Agreement shall be completed on or before the end of the term of the Agreement.

4. AGREEMENT AMOUNT NOT TO EXCEED: $570,000.00 for the term (from October 1, 2023 to September 30, 2026) of the Agreement.

5. AGREEMENT EXHIBITS.

The following documents memorialized below are the only exhibits to this agreement and are incorporated by reference as though fully set forth herein. In the event of a conflict between the Exhibits and this Agreement, the Agreement controls.

Exhibit A: Scope of Services
Exhibit B: Schedule of Compensation
Exhibit C: Insurance Requirements
Exhibit D: Living Wage Policy
Exhibit E: Prevailing Wage Policy

6. DESIGNATED REPRESENTATIVES.

The Designated Representatives listed below shall be authorized to act on behalf of the named Party, be responsible for negotiations and contractual matters, and coordinate with each other to perform the services under this Agreement. Additionally, CONSULTANT's services shall be performed or immediately supervised by the CONSULTANT's Representative:

CITY Designated Representative:
Name: Kathleen Mallory
Title: Planning & Sustainability Manager
Phone: 805-385- 8370
Email: Kathleen.mallory@oxnard.org
Mailing Address (if differs from above):
214 South C Street, Oxnard, CA 93030

CONSULTANT Designated Representative:
Name: Rachelle Arizmendi
Title: Account Executive
Phone: 213-200-6376
Email: rachelle.arizmendi@avenuinsights.com
Mailing Address (if differs from above):
5860 Trinity Parkway, Suite 120, Centreville, VA 20120

7. CONTRACTUAL PREREQUISITES.

7.1 This Agreement must first be executed by the CONSULTANT, after which the Agreement shall be approved as to form by the CITY Attorney, then executed by the Mayor, or an authorized person on behalf of the CITY, and if executed by the Mayor shall also be executed by the CITY Clerk.

7.2 CONSULTANT is advised that any recommendation for AGREEMENT award is not binding on CITY until the AGREEMENT is fully executed and approved by CITY.

7.3 A request for modification of the terms, prior to execution of the Agreement, must be made in writing and presented to the Designated Representative of the CITY prior to the time this Agreement is executed.

7.4 All proof of business license, insurance, and W-9 forms is required prior to execution of this Agreement.

7.5 CONSULTANT shall not perform any work under this Agreement until a proof of insurance has been provided to the City as required under Section 24 of this Agreement.

8. CONSULTANT'S SERVICES.

8.1 CONSULTANT shall perform the tasks, obligations, and services set forth in the "Scope of Services," attached to and incorporated into this Agreement as "Exhibit A." Once this Agreement is executed, the Scope of Services may only be modified by written Amendment pursuant to Section 12 of this Agreement.

8.2 The Services shall be coordinated with the designated City Project Manager set forth in Exhibit A subject to the direction of the City Manager or Department Director. CONSULTANT hereby designates its Project Manager as set forth in "Exhibit A" as the person responsible for the Services who shall coordinate with City's Project Manager in executing the scope of services under this Agreement.

9. COMPENSATION.

CITY shall pay CONSULTANT for the services performed pursuant to the terms of this Agreement in the time and manner set forth in the "Schedule of Compensation," attached to and incorporated into this Agreement as "Exhibit B." CITY shall pay SERVICE PROVIDER an amount not to exceed the amount is listed in Section 4 of this Agreement. Once this Agreement is executed, the Schedule of Compensation may only be modified by written Amendment pursuant to Section 12 of this Agreement, and may be subject to approval by the City Council.

10. PAYMENT & INVOICES.

The CITY shall pay all undisputed portions of any applicable invoice within forty-five (45) days after receipt of an invoice. In the event the CITY disputes one or more items in an invoice, the CITY shall, within forty-five (45) days after receipt of such invoice, notify the CONSULTANT of the item(s) being disputed and the reason(s) therefore. The CITY may withhold payment for such disputed items until resolution of the dispute.

10.1 Payment Request. CONSULTANT shall submit a payment request to CITY by the end of each calendar month listing the Services provided, costs of

those Services, and total amount due for the month. Invoices may be emailed to: ComDevAP@oxnard.org.

10.2 Non-Appropriation of Funds. Payments to be made to CONSULTANT by CITY for the Services performed within the current fiscal year are within the current fiscal budget and within an available, unexhausted and unencumbered appropriation of CITY. In the event CITY does not appropriate sufficient funds for payment of the Services beyond the current fiscal year, this Agreement shall cover payment for the Services only up to the conclusion of the last fiscal year in which CITY appropriated sufficient funds and shall automatically terminate at that fiscal year's conclusion.

10.3 CONSULTANT's acceptance of final payment made pursuant to this Agreement shall constitute a release of CITY from all claims and liabilities for compensation to CONSULTANT for anything completed, finished or relating to the Services. CITY's payment shall not constitute nor be deemed a release of the responsibility and liability of CONSULTANT for the accuracy and competency of the information provided and/or the Services performed hereunder, nor shall such payment be deemed to be an assumption of responsibility or liability by CITY for any defect or error in the Services performed by CONSULTANT and its employees, agents and Subcontracted CONSULTANTs.

10.4 CONSULTANT shall provide CITY with a completed Request for Taxpayer Identification Number and Certification, as issued by the Internal Revenue Service. If any sales tax is due for the Services performed by CONSULTANT or materials or products provided to CITY by CONSULTANT, CONSULTANT shall pay the sales tax. CITY shall not reimburse CONSULTANT for sales taxes paid by CONSULTANT.

11. OPTION TO EXTEND AGREEMENT.

When in the CITY's best interest, this Agreement may only be extended, if the City in its discretion exercises the option to extend pursuant to Section 3.2 and 3.3 of the Agreement. The initial term, plus any option to extend, shall not exceed a total of five (5) years. **If no option to extend the Agreement appears in sections 3.2 and 3.3, this Agreement shall not be extended.**

12. MODIFICATION OF AGREEMENT.

This Agreement may be amended, modified, or otherwise altered, or its provisions waived, only upon mutual consent of the Parties by written amendment, and as authorized by the Oxnard Municipal Code, Article IV, Sections 4-59 and 4-60.

13. TERMINATION OF AGREEMENT.

CITY may terminate this Agreement at any time, with or without cause and without penalty, upon thirty (30) calendar days' prior written notice pursuant to Section 31 of this agreement. Such termination shall be effective on the date specified in the notice, or if no date is specified, then thirty (30) calendar days from the date of the notice. CITY shall be liable to CONSULTANT only for work done by CONSULTANT up to and including the date of termination of this Agreement unless the termination is for cause, in which event CONSULTANT need be compensated only to the extent required by law. CONSULTANT may terminate this Agreement at any time during the term of the Agreement by giving the CITY sixty (60) calendar days' prior written notice.

14. INDEPENDENT CONTRACTOR

CONSULTANT is and shall at all times remain, as to CITY, a wholly independent contractor. Neither CITY nor any of its employees or agents shall have control over the conduct of CONSULTANT or any of its employees, except as stated in this Agreement. CONSULTANT has and shall retain the right to exercise full control over the employment, direction, means of performance, location, compensation and discharge of all persons assisting CONSULTANT. This Agreement shall not be interpreted to prevent or preclude CONSULTANT from rendering any services for CONSULTANT's own account or to any other person or entity as CONSULTANT in its sole discretion shall determine; provided, however, that performing such services shall not materially interfere with the Services the CONSULTANT shall perform for the CITY. The CITY retains the right to provide general instructions to and observe the CONSULTANT in the performance of all services done on behalf of the CITY.

CONSULTANT and its employees and agents have no authority, express or implied, to act on behalf of CITY in any capacity, to incur any debt, obligation or liability on behalf of CITY, bind CITY in any manner, or otherwise act on behalf of CITY as an agent. CONSULTANT and its employees are not employees of CITY. CONSULTANT and its employees are not entitled to receive from CITY any of the benefits or rights afforded employees of CITY, including but not limited to reserve leave, sick leave, vacation leave, holiday leave, compensatory leave, Public Employees Retirement System benefits, and health, life, dental, long-term disability and workers' compensation insurance benefits. CONSULTANT shall not, at any time or in any manner, represent that it or any of its agents or employees are in any manner agents or employees of CITY.

15. LAWFUL PERFORMANCE.

CONSULTANT shall abide by all Federal, State, and Local Laws and Regulations as may be related to the performance of duties under this Agreement. CONSULTANT, at its sole expense, shall obtain and maintain during the term of this Agreement, all appropriate permits, licenses, and certificates that may be required in connection with the performance of services under this Agreement.

16. SAFETY REQUIREMENTS.

CONSULTANT shall not perform any services for the CITY when the CONSULTANT is impaired by alcohol or a controlled substance. When there is reasonable cause to believe that any person has violated this provision, that person shall be immediately removed from the premises and be subject to any applicable civil and/or criminal penalties under the CITY's Code and/or under state law. All work performed under this Agreement shall be performed in such a manner as to provide safety to the public. The CITY reserves the right to issue restraining or cease and desist orders to CONSULTANT when unsafe or harmful acts are observed or reported relative to the performance of the work under this Agreement. The acceptance of CONSULTANT's work by CITY shall not operate as a release of the CONSULTANT from such standard of care and workmanship.

17. OWNERSHIP OF CONSULTANT'S WORK PRODUCT, CONFIDENTIALITY & DISCLOSURE.

CITY shall be the owner of any and all technical documents and records, including, computations, plans, correspondence, and/or other pertinent data and information, both hard copy and electronic, gathered or prepared by CONSULTANT in performance of this Agreement and shall be entitled to immediate possession of the same upon completion of the work under this Agreement, or at any earlier or later time when the same may be requested by CITY.

17.1. Records and Inspections. The CONSULTANT shall maintain full and accurate records, with respect to all services and matters covered under this Agreement. The CITY shall have free access at all reasonable times to such records, both hard copy and electronic, and the right to examine and audit the same and to make transcripts therefrom, and to inspect all program data, documents, proceedings, and activities.

17.2. Deliverables. CONSULTANT shall deliver to the CITY the studies, plans, specifications, or other documents as are identified in the Scope of Services; and CONSULTANT shall, upon completion of all work or termination of this Agreement, submit to the CITY all information developed in the course of the CONSULTANT's services. CONSULTANT shall, in such time and in such form as the CITY may require, furnish reports concerning the status of services required under this Agreement. CONSULTANT shall, upon request by CITY and upon completion or termination of this Agreement, deliver to the CITY all material furnished to CONSULTANT by the CITY.

17.3. Ownership – Generally. All inventions, discoveries, enhancements, changes, or improvements of computer programs developed pursuant to this Agreement shall be the property of the CITY, and all patents or copyrights shall be assigned to the CITY, unless otherwise agreed.

17.4. Ownership of Documents. Every report, draft, work product, map, record, and other document reproduced, prepared, or caused to be prepared by the CONSULTANT pursuant to or in connection with this Agreement shall be the exclusive property of the CITY.

17.5. Confidentiality. Information that is exempt from disclosure to the public is confidential. This includes information relating to the past, present, or future affairs of the CITY or information belonging to a third party whose information is in the CITY's possession or control under obligations of confidentiality. CONSULTANT may be granted access to information that is exempt from disclosure to the public (Government Code Section 6254 and 6254.16) and may contain "trade secrets" (see Government Code Section 6254.7(d)) when it is necessary for CONSULTANT to perform its obligations pursuant to this Agreement. If CONSULTANT is granted such access to confidential information, CONSULTANT shall not be considered to be a member of the public as that term is used in Government Code Section 6254.5.

17.6. Disclosure of Information. CONSULTANT shall not disclose, publish, or authorize others to disclose or publish, design data, drawings, specifications, reports, or other information pertaining to the projects assigned to CONSULTANT by the CITY or other information to which the CONSULTANT has had access during the term of this Agreement without the prior written approval of the CITY's Designated Representative during the term of this Agreement and for a period of two (2) years after the termination of this Agreement.

17.7. No Warranty. Other than an obligation upon the CITY to deal in good faith, the CITY makes no warranties and shall bear no liability or responsibility for errors or omissions in any Confidential Information disclosed under this Agreement or for any business decisions made by CONSULTANT in reliance on any Confidential Information disclosed under this Agreement.

18. ASSIGNMENT.

This Agreement is for the professional services of CONSULTANT. Any attempt by CONSULTANT to assign the benefits or burdens of this Agreement without the prior written approval of CITY shall be prohibited and shall be null and void. CONSULTANT's services pursuant to this Agreement shall be provided by the CONSULTANT's Designated Representative or directly under his/her supervision, and CONSULTANT shall not assign another to supervise the CONSULTANT's performance of this Agreement without the prior written approval of CITY, by and through the CITY's Designated Representative, which consent shall not be unreasonably withheld.

19. NOTICE OF BREACH AND OPPORTUNITY TO CURE.

Neither Party will be in breach of this Agreement where the breach is capable of being cured, or until written notice of the breach is received from the non-breaching

Party. The Party charged with breach will have thirty (30) calendar days from the date of receiving such notice in which to cure the breach or otherwise respond. If the circumstances leading to the charge that the Agreement was breached have not been cured or explained to the satisfaction of the other Party within thirty (30) days from the date on which the breaching Party received notice of breach, the non-breaching Party may terminate this Agreement.

20. NOTICE.

All notices given or required to be given pursuant to this Agreement shall be in writing and may be given by personal delivery or by first-class mail. Notice sent by mail shall be addressed to each Party's Designated Representative as set forth above in Section 6. When addressed in accordance with this Section, such notice shall be deemed given upon deposit in the United States mail, postage prepaid. In all other instances, notices shall be deemed given at the time of actual delivery. Changes may be made in the names or addresses of persons to whom notices are to be given by giving notice in the manner prescribed in this Section.

21. COVENANTS AND CONDITIONS.

Each term and each provision of this Agreement to be performed by CONSULTANT shall be construed to be both a covenant and a condition.

22. WAIVER.

CITY's review or acceptance of, or payment for, work product prepared by CONSULTANT under this Agreement will not be construed to operate as a waiver of any rights CITY may have under this Agreement or of any cause of action arising from CONSULTANT's performance. A waiver by CITY of any breach of any term, covenant, or condition contained in this Agreement will not be deemed to be a waiver of any subsequent breach of the same or any other term, covenant, or condition contained in this Agreement, whether of the same or different character.

23. INDEMNIFICATION, HOLD HARMLESS & DEFENSE.

23.1 As a separate and independent covenant from CONSULTANT's obligations under this section, CONSULTANT shall to the fullest extent permitted by law, immediately defend, indemnify, and hold harmless CITY, its legislative and advisory bodies, and the CITY's officials, directors, officers, employees, and agents (the "Indemnitees") from and against all liabilities regardless of nature, type, or cause, arising out of or resulting from or in connection with CONSULTANT's willful misconduct or negligent performance of this Agreement or CONSULTANT's failure to comply with any of its obligations contained in this Agreement. Liabilities subject to the duties to defend and indemnify include, without limitation, all claims, losses, damages, penalties, fines, and judgments; associated investigation and administrative expenses; defense costs, including

but not limited to reasonable attorneys' fees; court costs; and costs of alternative dispute resolution. CONSULTANT's obligation to indemnify applies unless it is adjudicated that any of the liabilities covered by this Section are the result of the sole active negligence or sole willful misconduct of any of the Indemnitees.

23.2 The provisions of this Subsection 23.2 apply only in the event that CONSULTANT is a design professional within the meaning of California Civil Code section 2782.8 ("Design Professional"). The term Design Professional, as defined in said section, is limited to licensed architects, licensed landscape architects, registered professional engineers, professional land surveyors, and the business entities that offer such services in accordance with the applicable provisions of the California Business and Professions Code.

23.3.1 Notwithstanding the provisions of Subsections 23.1 and 23.2 above, to the extent that the services to be provided under this Agreement are those of a Design Professional, CONSULTANT's duty to indemnify, hold harmless, and defend the Indemnitees shall be limited to the extent that any claims arise out of, pertain to, or relate to the negligence, recklessness, or willful misconduct of the CONSULTANT, its officers, agents, employees or subconsultants in the performance of the services described in this Agreement.

23.3.2 In no event shall the costs of defense charged to CONSULTANT exceed the CONSULTANT's proportionate percentage of fault, except as otherwise set forth in said Civil Code section 2782.8, the provisions of which are incorporated into this Agreement by this reference. Nothing in this Subsection 23.2 shall be construed to require CONSULTANT to provide indemnification for claims caused by the active negligence or willful misconduct of the Indemnitees.

23.4 The review, acceptance or approval of CONSULTANT's work or work product by any of the Indemnitees shall not affect, relieve or reduce CONSULTANT's indemnification or defense obligations. CONSULTANT waives any right of contribution against CITY or any of CITY's officers, employees, agents, or volunteers arising out of such failure to inspect, review, monitor, or supervise the work performed by CONSULTANT pursuant to this Agreement. The provisions of this Section shall not be restricted by and do not affect the provisions of this Agreement relating to Section 24. The CONSULTANT's obligations under this Section of the Agreement shall survive the termination of the Agreement.

23.5 CONSULTANT agrees to pay all required taxes on amounts paid to CONSULTANT under this Agreement, and to indemnify and hold CITY harmless from any and all taxes, assessments, penalties, and interest asserted against CITY by reason of the independent contractor relationship created by this Agreement. CONSULTANT shall be solely responsible for, and shall save CITY harmless from, all matters relating to the payment of CONSULTANT's

subcontractors, material suppliers, directors, officers, employees, agents and representatives, including compliance with social security requirements, federal and State income tax withholding, and all other regulations governing employer-employee relations, as applicable. CITY shall have the right to offset against the amount of any compensation due to CONSULTANT under this Agreement any amount due to CITY from CONSULTANT as a result of its failure to promptly pay to CITY any reimbursement or indemnification arising under this Section.

24. INSURANCE.

CONSULTANT shall obtain and maintain during the performance of any services under this Agreement the insurance coverages listed within "Exhibit C", which is attached hereto and incorporated herein by this reference, unless the Risk Manager waives, in writing, the requirement that CONSULTANT obtain and maintain such insurance coverages. Such insurance must be issued by a company satisfactory to the Risk Manager. CONSULTANT shall, before performance of any services pursuant to this Agreement, file with the Risk Manager evidence of insurance coverage as specified in "Exhibit C". Maintenance of insurance coverages by CONSULTANT is a material element of this Agreement. CONSULTANT'S failure to maintain or renew insurance coverages or to provide renewal evidence shall be considered a material breach of this Agreement.

25. LIVING WAGE REQUIREMENTS.

During the term of this Agreement, CONSULTANT understands and agrees that if Living Wages are applicable subject to the 2002 Oxnard City Council Living Wage Policy, attached as "Exhibit D" to this Agreement, CONSULTANT will pay and/or provide the wages and/or benefits required therein to all of its employees engaged in whole or in part in performing the services provided for by this Agreement. The duty to pay the correct wage is the responsibility of the CONSULTANT.

26. PREVAILING WAGE REQUIREMENTS.

26.1. Application. The payment of State prevailing wages as designated for Ventura County shall apply to public works projects. However, this section shall not apply to work performed on a public works project of twenty-five thousand dollars ($25,000) or less when the project is for construction, alteration, demolition, installation, or repair work; or to work performed on a public works project of fifteen thousand dollars ($15,000) or less when the project is for maintenance work. Prevailing wages are required to be paid to all workers, including subcontracted employees.

26.2. Compliance with California Department of Industrial Relations (DIR). To determine if this Agreement is subject to compliance monitoring and enforcement, go to:
https://www.dir.ca.gov/Public-Works/PublicWorksSB854FAQ.html

26.3. Contract Splitting. It is unlawful to split, or separate into small portions, work orders, projects, purchases, or public works projects for the purpose of evading these prevailing wage requirements.

26.4. Use of Prevailing Wages vs. Living Wages. In the event that there is a difference between the amount of wages to be paid under the CITY of Oxnard's local Living Wage requirements and the requirements of this provision, the wage rate that is the higher of the two shall be applicable to this Agreement. The duty to pay the correct wage is the responsibility of the CONSULTANT.

27. CONFLICT OF INTEREST

CONSULTANT covenants that it does not have any interest, nor shall it acquire any interest, directly or indirectly, which would conflict in any manner with the performance of CONSULTANT's services under this Agreement. CONSULTANT further covenants that in the performance of services under this Agreement, no officer, employee or agent of CONSULTANT having such interest shall be employed by it. In the event the CITY determines that CONSULTANT must disclose its financial interests by completing and filing a Fair Political Practices Commission Form 700, Statement of Economic Interests, CONSULTANT shall file such Form 700 with the CITY Clerk's Office pursuant to the written instructions provided by the CITY Clerk. Acquisition or maintenance of a conflicting interest by CONSULTANT may result in termination of this Agreement by the CITY.

28. DISPUTES.

Except as otherwise provided in these provisions, any dispute concerning a question of fact arising under this Agreement, shall be decided by the CITY's Designated Representative, who shall reduce this decision to writing and mail a copy to the CONSULTANT. The decision of the CITY's Designated Representative shall be final and conclusive unless CONSULTANT requests mediation within ten (10) calendar days. Pending final decision of a dispute, the CONSULTANT shall proceed diligently with the performance of the Agreement and in accordance with the decision of the CITY's Designated Representative.

29. DISPUTE RESOLUTION.

Should an unresolved dispute arise out of this Agreement, any Party may request that it be submitted to mediation. The Parties shall meet in mediation within a reasonable time not to exceed forty five (45) days of a request. The mediator shall be agreed to by the mediating Parties. In the absence of an agreement on a mediator, the Parties shall each submit one name from mediators listed by the American Arbitration Association, the California State Board of Mediation and Conciliation, or other agreed-upon service. The mediator shall be selected by a "blindfold" process. The cost of mediation shall be borne equally by both Parties. Neither Party shall be deemed the prevailing Party. No Party shall be permitted to file a legal action without first meeting in

mediation and making a good faith attempt to reach a mediated settlement. The mediation process, once commenced by a meeting with the mediator, shall last until agreement is reached by the Parties but not more than sixty (60) calendar days, unless the maximum time is extended in writing by both Parties.

30. AUDIT.

CITY shall have the option of inspecting, auditing and/or reproducing all records and other written materials: used by CONSULTANT in preparing its billings to CITY as a condition precedent to any payment to CONSULTANT; or for other purposes relating to the Agreement. CONSULTANT will promptly furnish all documents requested by CITY. Additionally, if this Agreement is in excess of $10,000, the State Auditor may examine and audit CONSULTANT for a period of 3 years after final payment under the Agreement. Regardless of whether a State audit is permitted, CONSULTANT shall maintain and preserve all such records for a period of at least 3 years after final payment under the Agreement or until an audit has been completed and accepted by CITY, whichever occurs later. CONSULTANT shall maintain all such records in CITY or to promptly reimburse CITY for all reasonable costs incurred in conducting the audit at a location other than in CITY, including but not limited to expenses for personnel, salaries, private auditor, travel, lodging, meals and overhead. CONSULTANT shall include a copy of this Section in all contracts with its subcontractors, and CONSULTANT shall be responsible for immediately obtaining those records or other written material from its subcontractors upon a request by the State Auditor and/or CITY.

31. ADVERTISING AND PUBLICITY

CONSULTANT shall not use the name of or refer to CITY directly or indirectly in any advertisement, news release, or professional or trade publication without prior written approval from the CITY Manager. This Section shall survive the termination of this Agreement.

32. NONDISCRIMINATORY EMPLOYMENT.

CONSULTANT shall not unlawfully discriminate against any individual based on race, color, religion or religious creed, national origin, ancestry, ethnic group identification, primary language, physical disability, mental disability, medical condition, genetic information, marital status, gender, gender identity, gender expression, sex, sexual orientation, age, immigration status, citizenship or military and veteran status. CONSULTANT understands and agrees that it is bound by and will comply with all legal nondiscrimination mandates. For every subcontractor who will perform Services, CONSULTANT shall be responsible for such subcontractor's compliance with this Section.

33. FORCE MAJEURE.

Neither the CONSULTANT nor the CITY shall be responsible for any delay caused by any contingency beyond their control, including, but not limited to, war or insurrection, walkouts by the Party's own employees, fires, natural calamities, pandemics, riots, or demands or requirements of governmental agencies other than the CITY.

34. GOVERNING LAW.

The terms of this Agreement shall be interpreted according to the laws of the State of California. Should litigation occur, venue shall be in the Superior Court of California, County of Ventura.

35. SEVERABILITY.

If any portion of this Agreement is declared by a court of competent jurisdiction to be invalid or unenforceable, then such portion will be deemed modified to the extent necessary in the opinion of the court to render such portion enforceable and, as so modified, such portion and the balance of this Agreement will continue in full force and effect and be enforceable.

36. INTEGRATED AGREEMENT.

This Agreement and the attached exhibits referenced herein to this Agreement represent the entire understanding between the Parties. No verbal agreement or implied covenant shall be held to vary the provisions of this Agreement. This Agreement shall bind and inure to the benefit of the Parties to this Agreement and any subsequent successors and assigns.

37. NO THIRD-PARTY BENEFICIARY.

This Agreement shall not be construed to be an agreement for the benefit of any third-party or parties, and no third party or parties shall have any claim or right of action under this Agreement.

38. AUTHORITY TO EXECUTE.

Each Party hereto expressly warrants and represents that through its Designated Representative it has the authority to execute this Agreement on behalf of its corporation, partnership, business entity, or governmental entity, and warrants and represents that the Designated Representative has the authority to bind each Party to the performance of its obligations hereunder.

39. EXECUTION – COUNTERPARTS.

This Agreement may be executed in any number of counterparts and each such duplicate counterpart shall constitute an original, but they shall not be effective nor

enforceable unless and until it is executed with the handwritten signature of an authorized representative of each of the relevant Parties. No counterpart shall be deemed to be an original or presumed delivered unless and until the counterpart executed by the other Party to this Agreement is in the physical possession of the Party seeking enforcement thereof.

40. INCONSISTENT OR CONFLICTING TERMS.

In the event of any contradictions or inconsistencies between any attached documents or exhibits incorporated by reference herein and the provisions of the Agreement itself, the terms of the Agreement shall control. Any exhibit that is attached and incorporated by reference shall be limited to the purposes for which it is attached, as specified in this Agreement. Any contractual terms or conditions contained in such exhibit imposing additional obligations on the CITY are not binding upon the CITY's Designated Representative unless specifically agreed to in writing, and initiated by CITY's Designated Representative, as to each additional contractual term or condition.

41. CAPTIONS AND HEADINGS.

The captions and headings contained in this Agreement are provided for identification purposes only and shall not be interpreted to limit or define the content, scope, or intent of the provisions described under the respective caption or heading.

42. ACKNOWLEDGEMENT.

By signing below, CONSULTANT acknowledges that it has reviewed the CITY's CONSULTANT/Professional Services Agreement terms and conditions and insurance requirements and that CONSULTANT hereby agrees to full compliance.

[Signatures on next page]

In witness whereof, the Parties have entered into this Agreement on the date as written in section 3 and upon signature of all Parties.

CITY OF OXNARD

☐John C. Zaragoza, Mayor[1] Date
☐Jennifer Yates, Purchasing Manager[2]

CONSULTANT

Paul Colangelo, CEO 9/12/23 Date

James Barkman, CFO [3] 9/14/23 Date

ATTEST:

Rose Chaparro, CITY Clerk Date
(only if Mayor authorizes)

APPROVED AS TO FORM:

Stephen M. Fischer, CITY Attorney (always required) Date

[1] The City Council must authorize and the Mayor must execute any agreement over $200,000.
[2] The Purchasing Agent may execute any authorized agreement up to $200,000.
[3] The City requires the following for any contract:

- For a corporation, the signatures of the Board President, CEO or Vice President and of the Board Secretary, Assistant Secretary, CFO or Assistant Treasurer;
- For an LLC, the signatures of at least two managers of the LLC (company directors, not lower-level managers); or
- For a partnership, the signature of a partner. If the partnership is a limited partnership, the signer must be a general partner.

If the company has a different structure, or if the above-listed persons are not the appropriate signers, please submit to the City Attorney legally-binding documentation stating who can sign and bind your company.

EXHIBIT A

PROFESSIONAL SERVICE AGREEMENT
(CITY of Oxnard and Avenu Insights & Analytics, LLC)

SCOPE OF SERVICES

Cannabis Financial Audit Services

At the request of the City's Project Manager, for each licensed cannabis business within the City, in accordance with Oxnard City Code requirements (Chapter 11 - Section: 11-476 and SEC. 11-414), Consultant will:

- Conduct an annual (one (1) time per year) financial audit of the businesses gross sales. The financial audit shall include an evaluation of each commercial cannabis business assets and liabilities.
- Verify quarterly tax payments reported for each cannabis business to determine if deficiencies exist between tax reporting provided to the City versus tax reporting provided to the State of California, Department of Tax and Fee Administration (CDTFA).
- Verify that each business is in compliance with the City's cannabis community benefits agreement which requires payment of 1% of the businesses gross revenues on an annual basis.

- The audit shall include the number of sales by the commercial cannabis business during the preceding 12-month period (provided on a per-month basis).

- Consultant will attend (virtually) quarterly meetings with City staff to discuss data, revenues, and analytical reports.

- Consultant shall prepare a report per business verifying the ownership associated with each commercial cannabis business and anyone owning or holding an interest in the commercial cannabis business. This is separate from all the officers, managers, employees, agents and volunteers currently employed or otherwise engaged by the commercial cannabis business.

- Consultant will review reporting provided to the CDTFA and determine adequacy and verification that the City is receiving the tax revenue required in accordance with the city's tax resolution.

Work Plan

In performing the financial audit services, Consultant will:

- Attend an Informational Kickoff meeting to meet with City staff to review and discuss potential audit candidates, audit approach and establish a mutually agreeable project timeline.

- Begin the audit process

- Meet with City staff on audit activities and findings, including, but not limited to:
    - Unexpected delays resulting from the business entity response or other causes
    - Significant errors or issues identified during the audit process
    - Cooperation issues with the business entity
- Meet with City staff to present the draft report for each business
- Prepare the final audit report, which will include information about each business, those in compliance, those not in compliance, and recommendations for corrective actions
- Present the audit summary – a written report with recommendations on possible administrative, technical and/or regulatory policy modifications that may improve future compliance

Commercial Cannabis Business Audit Approach

Consultant will conduct initial expedited analytical evaluations before starting a complete verification of the business operations, which will determine extent and depth of the full examination. The audit analysis can include, but is not limited to the following tasks:

1. Review of applicable provisions of the City's municipal code and resolutions adopted by the City.
2. Review business records filed with the City such as applications, operating agreements, compliance documents and tax returns.
3. Initiate communication with businesses to establish appropriate business contacts, Point of Sales systems (POS), product inventory and tracking systems, accounting data systems, physical operation procedures and methodology.
4. Examination of business operations and financial data to verify the accuracy of reported tax returns and compliance with city regulatory and administrative policies.
5. Prepare a draft audit report for each business entity, which will identify any tax deficiencies with a summary explaining how the error was established and suggestions on a resolution to ensure future compliance.
6. The draft report will first be discussed with City staff and then presented to the business entity, which will be provided an appropriate amount of time to review the audit report and respond to any audit findings.
7. Prepare a final audit report summarizing the findings, which will include information about the specific aspects of the business that were in compliance, those that were not in compliance, and recommendations for corrective actions. If relevant, Consultant will also include areas for continued monitoring.
8. Prepare an audit summary report upon completion of all the initial audits, which will provide recommendations to the City on possible administrative, technical and/or regulatory policy modification that may be considered to improve compliance with City operating and reporting requirements.

Audit Timeline

Per audit, Consultant estimates 20 hours total for proposed oversight fixed hours (Tasks 1, 6 & 8) and 30 hours for proposed annual audit hours for each business (Tasks 2, 3, 4, 5 & 7). The project duration is estimated at 60 days from obtaining access to the business data.

EXHIBIT B

PROFESSIONAL SERVICE AGREEMENT
(CITY of Oxnard and Avenu Insights & Analytics, LLC)

SCHEDULE OF COMPENSATION

Consultant will perform cannabis financial audit services at a rate of $150 per hour, with a not to exceed cost of $7,500 per audit.

EXHIBIT C

PROFESSIONAL SERVICES AGREEMENT
(CITY of Oxnard and Avenu Insights & Analytics, LLC)

INSURANCE REQUIREMENTS

Prior to contract approval, CONSULTANT/SERVICE PROVIDER/SELLER/BIDDER (hereafter referred to as "CONSULTANT") must procure, agree to maintain and supply evidence of insurance at the levels listed and in accordance with the other provisions listed in this document.

INSURANCE REQUIREMENTS FOR CONSULTANTS
(WITH ERRORS AND OMISSIONS REQUIREMENT)

1. Consultant shall obtain and maintain during the performance of any services under this Agreement the following insurance against claims for injuries to persons or damages to property which may arise from or in connection with the performance of services hereunder by Consultant, its agents, representatives, employees or subconsultants.

a. Commercial General Liability Insurance, including Contractual Liability, in an amount not less than $1,000,000 combined single limit for bodily injury and property damage for each claimant for general liability with coverage equivalent to Insurance Services Office Commercial General Liability Coverage (Occurrence Form CG 0001). If a general aggregate limit is used, that limit shall apply separately to the project or shall be twice the occurrence amount;

b. Business automobile liability insurance in an amount not less than $1,000,000 combined single limit for bodily injury and property damage for each claimant for automobile liability with coverage equivalent to Insurance Services Office automobile liability coverage (Occurrence Form CA0001) covering Code No. 1, "any auto;"

c. Professional liability/errors and omissions insurance appropriate to Consultant's profession to a minimum coverage of $1,000,000, with neither Consultant nor listed subconsultants having less than $500,000 individually. The professional liability/errors and omissions insurance must be project specific with at least a one year extended reporting period, or longer upon request.

d. Workers' compensation insurance in compliance with the laws of the State of California, and employer's liability insurance in an amount not less than $1,000,000 per claimant. Additionally, the workers' compensation policy shall include a waiver of all rights of subrogation which the insurer may have against the City.

2. Consultant shall, prior to performance of any services, file with the Risk Manager certificates of insurance with original endorsements effecting coverage required by this Exhibit INS-A. The certificates and endorsements for each insurance policy are to be signed by a person authorized by that insurer to bind coverage on its behalf. The certificates and endorsements are to be on the attached forms or on other forms approved by the Risk Manager. All certificates and endorsements are to be received and approved by the Risk Manager before commencement of services. City reserves the right to require complete certified copies of all required insurance policies at any time. The certificates of insurance and endorsements shall be sent via email. If you have not received your request or are having difficulty with electronic upload, contact insurance@oxnard.org

3. Consultant agrees that all insurance coverages shall be provided by a California admitted insurance carrier with an A.M. Best rating of A:VII or better and shall be endorsed to state that coverage may not be suspended, voided, canceled, or reduced in coverage or limits without 30 days' prior written notice to the Risk Manager. The Risk Manager shall not approve or accept any endorsement if the endorsement contains "best effort" modifiers or if the insurer is relieved from the responsibility to give such notice.

4. Consultant agrees that the commercial general liability and business automobile liability insurance policies shall be endorsed to name City, its City Council, officers, employees, agents and volunteers as additional insureds as respects: liability arising out of activities performed by or on behalf of Consultant; products and completed operations of Consultant; premises owned, occupied or used by Consultant; or automobiles owned, leased, hired or borrowed by Consultant. The coverage shall contain no special limitations on the scope of protection afforded to City, its City Council, officers, employees, agents and volunteers. **The General Liability Special Endorsement Form and Automobile Liability Special Endorsement Form attached to this Exhibit INS-A or substitute forms containing the same information and acceptable to the Risk Manager shall be used to provide the endorsements (ISO form CG 2010 11/85 or if not available, CG 2010 with an edition date prior to 01/04 <u>and</u> CG 2037).**

5. The coverages provided to City shall be primary and not contributing to or in excess of any existing City insurance or self-insurance coverages **(this must be endorsed)**. Additionally, the workers' compensation policy shall include a waiver of all rights of subrogation which the insurer may have against the City. Any failure to comply with reporting provisions of the policies shall not affect coverage provided to City, its City Council, officers, employees and volunteers. The insurance shall apply separately to each insured against whom claim is made or suit is brought, except with respect to the limits of the insurer's liability.

6. The insurer shall declare any deductibles or self-insured retentions to and be approved by the Risk Manager. At the option of the Risk Manager, either the insurer shall reduce or eliminate such deductibles or self-insured retentions as respects City, its City Council, officers, employees and volunteers, or the Consultant shall procure a bond guaranteeing payment of losses and related investigations, claim administration and defense expenses.

7. All insurance standards applicable to Consultant shall also be applicable to Consultant's subconsultants. Consultant agrees to maintain appropriate agreements with subconsultants and to provide proper evidence of coverage upon receipt of a written request from the Risk Manager.

9/23

INSTRUCTION FOR SUBMITTING INSURANCE CERTIFICATES AND ENDORSEMENT FORMS

Certificates of Insurance

The sample accord form on the following page is provided to facilitate your preparation and submission of certificates of insurance. You may use this or any industry form that shows coverage as broad as that shown on the attached sample. **Please note the certificate holder address must be as shown on the attached sample accord form with the contract number and insurance exhibit identification information completed.** Improperly addressed certificates may delay the contract start-up date because the City's practice is to return unidentifiable insurance certificates to the insured for clarification as to the contract number. **Cancellation provisions must be endorsed to the policy. Modifying the certificate does not change coverage or obligate the carrier to provide notice of cancellation.**

Endorsement Forms

Original endorsements are required for commercial general liability and business automobile liability insurance policies and must be attached to the applicable certificate of insurance. City preference is that the Consultant/insurer use the endorsement forms which are attached. Substitute forms will be accepted, however, as long as they include provisions comparable to the sample accord form.

INS-A.doc

ACORD CERTIFICATE OF INSURANCE

ISSUE DATE (MM/DD/YY)

PRODUCER

THIS CERTIFICATE IS ISSUED AS A MATTER OF INFORMATION ONLY AND CONFERS NO RIGHTS UPON THE CERTIFICATE HOLDER. THIS CERTIFICATE DOES NOT AMEND, EXTEND OR ALTER THE COVERAGE AFFORDED BY THE POLICIES BELOW.

CODE SUB-CODE

COMPANIES AFFORDING INSURANCE COVERAGE

INSURED

COMPANY LETTER A SPECIFY COMPANY NAMES IN THIS SPACE

COMPANY LETTER B

COVERAGES

THIS IS TO CERTIFY THAT THE POLICIES OF INSURANCE LISTED BELOW HAVE BEEN ISSUED TO THE INSURED NAMED ABOVE FOR THE POLICY PERIOD INDICATED, NOTWITHSTANDING ANY REQUIREMENT, TERM OR CONDITION OF ANY CONTRACT OR OTHER DOCUMENT WITH RESPECT TO WHICH THIS CERTIFICATE MAY BE ISSUED OR MAY PERTAIN, THE INSURANCE AFFORDED BY THE POLICIES DESCRIBED HEREIN IS SUBJECT TO ALL THE TERMS, EXCLUSIONS AND CONDITIONS OF SUCH POLICIES. LIMITS SHOWN MAY HAVE BEEN REDUCED BY PAID CLAIMS.

CO LTR	TYPE OF INSURANCE	POLICY NUMBER	POLICY EFFECTIVE DATE (MM/DD/YY)	POLICY EXPIRATION DATE (MM/DD/YY)	LIMITS
A	**GENERAL LIABILITY** [x] COMMERCIAL GENERAL LIABILITY [ ] CLAIMS MADE [x] OCCUR. [x] OWNER'S & CONTRACTOR'S PROT.				GENERAL AGGREGATE $1,000,000 PRODUCTS COMP/OP AGG. $1,000,000 PERSONAL & ADV. INJURY $1,000,000 EACH OCCURRENCE $1,000,000 FIRE DAMAGE (Any one fire) $ MED. EXPENSE (Any one person) $
A	**AUTOMOBILE LIABILITY** [x] ANY AUTO ALL OWNED AUTOS SCHEDULED AUTOS HIRED AUTOS NON-OWNED AUTOS GARAGE LIABILITY				COMBINED SINGLE LIMIT $1,000,000 BODILY INJURY (Per person) $ BODILY INJURY (Per accident) $ PROPERTY DAMAGE $
A	**EXCESS LIABILITY** UMBRELLA FORM OTHER THAN UMBRELLA FORM				EACH OCCURRENCE $ AGGREGATE $
A	**WORKERS' COMPENSATION AND EMPLOYERS' LIABILITY**				STATUTORY LIMITS EACH ACCIDENT $1,000,000 DISEASE-POLICY LIMIT $1,000,000 DISEASE-EACH EMPLOYEE $1,000,000
A	**OTHER** Errors and omissions insurance or malpractice insurance available for the insured's profession				Minimum coverage $1,000,000 Each consultant/ & listed sub-consultant $500,000

DESCRIPTION OF OPERATIONS/LOCATIONS/VEHICLES/RESTRICTIONS/SPECIAL ITEMS

CERTIFICATE HOLDER

CITY OF OXNARD % Evident ID, Inc.
8520 Allison Pointe Blvd. Ste 223
PMB 5210
Indianapolis, Indiana 462500-4299 US

CANCELLATION

SHOULD ANY OF THE ABOVE DESCRIBED POLICIES BE CANCELED BEFORE THE EXPIRATION DATE THEREOF, THE ISSUING COMPANY WILL ~~ENDEAVOR TO~~ MAIL 30 DAYS WRITTEN NOTICE TO THE CERTIFICATE HOLDER NAMED TO THE LEFT, ~~BUT FAILURE TO MAIL SUCH NOTICE SHALL IMPOSE NO OBLIGATION OR LIABILITY OF ANY KIND UPON THE COMPANY, ITS AGENTS OR REPRESENTATIVES.~~

AUTHORIZED REPRESENTATIVE

Rev. 9/23

INS-A.doc

GENERAL LIABILITY SPECIAL ENDORSEMENT FOR THE CITY OF OXNARD (the "City")

SUBMIT IN DUPLICATE

ENDORSEMENT NO.	ISSUE DATE (MM/DD/YY)

PRODUCER

Telephone:

NAMED INSURED

POLICY INFORMATION:
Insurance Company:
Policy No.:
Policy Period: (from) (to)
LOSS ADJUSTMENT EXPENSE ☐ Included in Limits
☐ In Addition to Limits

☐ Deductible ☐ Self-Insured Retention (check which) of $ _____
with an Aggregate of $_____ applies to _____
coverage. ☐ Per Occurrence ☐ Per Claim (which)

APPLICABILITY. This insurance pertains to the operations, products and/or tenancy of the named insured under all written agreements and permits in force with the City unless checked here ☐ in which case only the following specific agreements and permits with the City are covered

CITY AGREEMENTS/PERMITS

TYPE OF INSURANCE

GENERAL LIABILITY
☐ COMMERCIAL GENERAL LIABILITY ☐ Claims Made
☐ COMPREHENSIVE GENERAL LIABILITY Retroactive Date _____
☐ OWNERS & CONTRACTORS PROTECTIVE ☐ Occurrence

OTHER PROVISIONS

COVERAGES	LIABILITY LIMITS IN THOUSANDS $	
	EACH OCCURRENCE	AGGREGATE
☐ GENERAL		
☐ PRODUCTS/COMPLETED OPERATIONS		
☐ PERSONAL & ADVERTISING INJURY		
☐ FIRE DAMAGE		
☐ _____		
☐ _____		

CLAIMS: Underwriter's representative for claims pursuant to this insurance.

Name: _____
Address: _____
_____
Telephone: (____) _____

In consideration of the premium charged and notwithstanding any inconsistent statement in the policy to which this endorsement is attached or any endorsement now or hereafter attached thereto, insurance company agrees as follows:

INSURED. The City, its officers, agents, employees and volunteers are included as insureds with regard to liability and defense of suits arising from the operations, products and activities performed by or on behalf of the named insured.

CONTRIBUTION NOT REQUIRED. As respects: (a) work performed by the named insured for or on behalf of the City; or (b) products sold by the named insured to the City; or (c) premises leased by the named insured from the City, the insurance afforded by this policy shall be primary insurance as respects the City, its officers, agents, employees or volunteers; or stand in an unbroken chain of coverage excess of the named insured's scheduled underlying primary coverage. In either event, any other insurance maintained by the City, its officers, agents, employees or volunteers shall be in excess of this insurance and shall not contribute with it.

SEVERABILITY OF INTEREST. This insurance applies separately to each insured against whom claim is made or suit is brought except with respect to the company's limits of liability. The inclusion of any person or organization as an insured shall not affect any right which such person or organization would have as a claimant if not so included.

CANCELLATION NOTICE. With respect to the interests of the City, this insurance shall not be canceled, or materially reduced in coverage or limits except after thirty (30) days prior written notice by receipted delivery has been given to the City.

PROVISIONS REGARDING THE INSURED'S DUTIES. Any failure to comply with reporting provisions of the policy or breaches or violations of warranties shall not affect coverage provided to the City, its officers, agents, employees or volunteers.

SCOPE OF COVERAGE. This policy, if primary, affords coverage at least as broad as:

Insurance Services Office Commercial General Liability Coverage, "occurrence" form CG0001; or

If excess, affords coverage which is at least as broad as the primary insurance form CG0001.

Except as stated above nothing herein shall be held to waive, alter or extend any of the limits, conditions, agreements or exclusions of the policy to which this endorsement is attached.

ENDORSEMENT HOLDER

CITY OF OXNARD % Evident ID, Inc.
8520 Allison Pointe Blvd. Ste 223
PMB 5210
Indianapolis, Indiana 462500-4299 US

AUTHORIZED REPRESENTATIVE

☐ Broker/Agent ☐ Underwriter ☐ _____

I _____ (print/type name), warrant that I have authority to bind the above-mentioned insurance company and by my signature hereon do so bind this company to this endorsement.

Signature _____
(original signature required)
Telephone: (____) _____ Date Signed: _____

Rev. 9/23 INS-A.doc

AUTOMOBILE LIABILITY SPECIAL ENDORSEMENT FOR THE CITY OF OXNARD (the "City")

SUBMIT IN DUPLICATE

ENDORSEMENT NO.	ISSUE DATE (MM/DD/YY)

PRODUCER

Telephone:

NAMED INSURED

POLICY INFORMATION:
Insurance Company:
Policy No.:
Policy Period: (from) (to)
LOSS ADJUSTMENT EXPENSE ☐ Included in Limits
☐ In Addition to Limits

☐ Deductible ☐ Self-Insured Retention (check which) of $ _____ with an Aggregate of $_____ applies to coverage. ☐ Per Occurrence ☐ Per Claim (which)

APPLICABILITY. This insurance pertains to the operations, products and/or tenancy of the named insured under all written agreements and permits in force with the City unless checked here ☐ in which case only the following specific agreements and permits with the City are covered:

CITY AGREEMENTS/PERMITS

TYPE OF INSURANCE

☐ COMMERCIAL AUTO POLICY
☐ BUSINESS AUTO POLICY
☐ OTHER

OTHER PROVISIONS

LIMIT OF LIABILITY

$ _____ per accident, for bodily injury and property damage.

CLAIMS: Underwriter's representative for claims pursuant to this insurance.
Name: _____
Address: _____
_____
Telephone: ( ) _____

In consideration of the premium charged and notwithstanding any inconsistent statement in the policy to which this endorsement is attached or any endorsement now or hereafter attached thereto, insurance company agrees as follows:

1. **INSURED.** The City, its officers, agents, volunteers and employees are included as insureds with regard to liability and defense of suits arising from the operations, products and activities performed by or on behalf of the named insured.

CONTRIBUTION NOT REQUIRED. As respects: (a) work performed by the named insured for or on behalf of the City; or (b) products sold by the named insured to the City; or (c) premises leased by the named insured from the City, the insurance afforded by this policy shall be primary insurance as respects the City, its officers, agents, employees or volunteers; or stand in an unbroken chain of coverage excess of the named insured's scheduled underlying primary coverage. In either event, any other insurance maintained by the City, its officers, agents, employees or volunteers shall be in excess of this insurance and shall not contribute with it.

SEVERABILITY OF INTEREST. This insurance applies separately to each insured against whom claim is made or suit is brought except with respect to the company's limits of liability. The inclusion of any person or organization as an insured shall not affect any right which such person or organization would have as a claimant if not so included.

CANCELLATION NOTICE. With respect to the interests of the City, this insurance shall not be canceled, or materially reduced in coverage or limits except after thirty (30) days prior written notice by receipted delivery has been given to the City.

PROVISIONS REGARDING THE INSURED'S DUTIES. Any failure to comply with reporting provisions of the policy or breaches or violations of warranties shall not affect coverage provided to the City, its officers, agents, employees or volunteers.

SCOPE OF COVERAGE. This policy, if primary, affords coverage at least as broad as:

Insurance Services Office Automobile Liability Coverage, "occurrence" form CA0001, code ("any auto"); or

If excess, affords coverage which is at least as broad as the primary insurance form referenced in the preceding section (1).

Except as stated above nothing herein shall be held to waive, alter or extend any of the limits, conditions, agreements or exclusions of the policy to which this endorsement is attached.

ENDORSEMENT HOLDER

CITY OF OXNARD % Evident ID, Inc.
8520 Allison Pointe Blvd. Ste 223
PMB 5210
Indianapolis, Indiana 462500-4299 US

AUTHORIZED REPRESENTATIVE

☐ Broker/Agent ☐ Underwriter ☐ _____

I _____ (print/type name), warrant that I have authority to bind the above-mentioned insurance company and by my signature hereon do so bind this company to this endorsement.

Signature _____
(original signature required)

Telephone: ( ) Date Signed _____

Rev. 9/23

EXHIBIT D

PROFESSIONAL SERVICES AGREEMENT
(CITY of Oxnard and Avenu Insights & Analytics, LLC)

LIVING WAGE POLICY

Pursuant to the Living Wage Policy adopted July 9, 2002 by the City Council and effective October 1, 2002, the City Manager and City Attorney are directed to include the following language in all standard CONSULTANT/Professional services contracts and all unique trade services contracts governed by the Living Wage Policy.

A. CONSULTANT shall compensate any employee of CONSULTANT who provides services under this Agreement in accordance with the Living Wage Policy, attached hereto and incorporated herein by reference as the Living Wage Policy Exhibit. While this Agreement is in effect, CONSULTANT shall pay such employee no less than $18.22 per hour for each hour that such employee provides services under this Agreement. In addition, while this Agreement is in effect, CONSULTANT shall provide to such employee no less than 96 hours of paid leave per calendar year.

B. CONSULTANT agrees to post, at a location readily accessible to those employees providing services to the CITY, a copy of the Living Wage Policy adopted by City Council on July 9, 2002 and effective October 1, 2002.

C. If CONSULTANT fails to compensate such employee pursuant to the Living Wage Policy, the City Manager or designee shall terminate this Agreement on written notice to CONSULTANT, effective immediately.

D. In addition, if CONSULTANT fails to comply with the Living Wage Policy in any manner, CONSULTANT shall pay to CITY a fine of $500 and shall pay to any employee providing services under this Agreement a penalty of three times the amount or value of the compensation owed to such employee under the Living Wage Policy. CONSULTANT shall pay such fine and penalty within fifteen (15) calendar days after the City Manager or designee provides written notice to CONSULTANT of the amount owed.

CITY OF OXNARD LIVING WAGE REQUIREMENTS
EFFECTIVE JULY 1, 2022

CONSULTANT shall compensate any employee of CONSULTANT who provides services under this Agreement in accordance with the Living Wage Policy, attached hereto and incorporated herein by reference as Exhibit D. While this Agreement is in effect, CONSULTANT shall pay such employee no less than $18.22 per hour for each hour that such employee provides services under this Agreement. This hourly rate shall be adjusted on July 1, 2023, and each July 1 thereafter, according to the percentage change in the Consumer Price Index, all items, prepared by the Bureau of Labor Statistics for the Los Angeles area relating to all urban consumers (CPI-U), index base 1982-84=100, comparing May of the previous year to May of the current year. In addition, while this Agreement is in effect, CONSULTANT shall provide to such employee no less than 96 hours of paid leave per calendar year.

a. CONSULTANT agrees to post, at a location readily accessible to those employees providing services to the CITY, a copy of the Living Wage Policy adopted by the Oxnard City Council on July 9, 2002 and effective October 1, 2002.

b. If CONSULTANT fails to compensate such employee pursuant to the Living Wage Policy, the City Manager or designee shall terminate this Agreement on written notice to CONSULTANT, effective immediately.

c. In addition, if CONSULTANT fails to comply with the Living Wage Policy in any manner, CONSULTANT shall pay to CITY a fine of $500 and shall pay to any employee providing services under this Agreement a penalty of three times the amount or value of the compensation owed to such employee under the Living Wage Policy. CONSULTANT shall pay such fine and penalty within fifteen (15) calendar days after the City Manager or designee provides written notice to CONSULTANT of the amount owed.

EXHIBIT E

PROFESSIONAL SERVICES AGREEMENT
(CITY of Oxnard and Avenu Insights & Analytics, LLC)

PREVAILING WAGE

1. CONSULTANT acknowledges that the Project defined in the Agreement between CONSULTANT and CITY is a "public work" as defined in Division 2, Part 7, Chapter 1 of the California Labor Code ("Chapter 1"), and that this Agreement is subject to Chapter 1 and the rules and regulations established by the Director of Industrial Relations ("DIR") implementing such statutes. CONSULTANT shall perform the Project as a public work. CONSULTANT shall comply with and be bound by all the terms, rules and regulations described in Chapter 1 and the DIR's rules and regulations as though set forth in full herein.

2. Pursuant to Labor Code Section 1773.2, copies of the prevailing rate of per diem wages for each craft, classification, or type of worker needed to perform the Agreement are on file at City Hall and will be made available to any interested party on request. CONSULTANT acknowledges receipt of a copy of the DIR determination of such prevailing rate of per diem wages, and CONSULTANT shall post such rates at each job site covered by this Agreement.

3. CONSULTANT is required to post job site notices, as prescribed by regulation. See Labor Code Section 1771.4(a)(2).

4. CONSULTANT shall comply with and be bound by the provisions of Labor Code Sections 1774 and 1775 concerning the payment of prevailing rates of wages to workers and the penalties for failure to pay prevailing wages. CONSULTANT shall, as a penalty to CITY, forfeit not more than $200 for each calendar day or portion thereof for each worker paid less than the DIR's determined prevailing rates for the work or craft in which the worker is employed pursuant to this Agreement by CONSULTANT or any subcontractor. The Labor Commissioner shall determine the amount of the penalty as described in Section 1775.

5. CONSULTANT shall comply with Labor Code Section 1776, which requires CONSULTANT and each subcontractor to (1) keep accurate payroll records and verify such records in writing under penalty of perjury, (2) certify and make such payroll records available for inspection, and (3) inform CITY of the location of the records.

6. CONSULTANT shall comply with Labor Code Sections 1777.5, 1777.6 and 1777.7 and California Administrative Code Title 8, Section 200 et seq. concerning the employment of apprentices on public works projects for all apprenticeable occupations. Before commencing work under this Agreement, CONSULTANT shall provide CITY with a copy of the information submitted to any applicable apprenticeship program. Within 60 days after concluding the Project, CONSULTANT

and each of its subcontractors shall submit to CITY a verified statement of the journeyman and apprentice hours performed under this Agreement.

7. CONSULTANT may not be debarred or suspended throughout the Agreement Term pursuant to Labor Code Section 1777.1 or 1777.7. If he, she or it becomes debarred or suspended in the Agreement Term, CONSULTANT must immediately notify CITY.

8. CONSULTANT is not qualified to bid on, be listed in a Bid proposal, or engage in the performance of any contract for public work, as defined in Labor Code Sections 1720 through 1861, unless currently registered and qualified to perform public work pursuant to Labor Code Section 1725.5. CONSULTANT shall continue without interruption to stay registered and qualified to perform public work pursuant to Section 1725.5 for the duration of the term of this Agreement. This provision does not apply to construction, alteration, demolition, installation or repair work of $25,000 or less or to maintenance work of $15,000 or less.

9. CONSULTANT acknowledges that 8 hours labor constitutes a legal day's work. CONSULTANT shall comply with and be bound by Labor Code Section 1810.

10. CONSULTANT shall comply with and be bound by Labor Code Section 1813 concerning penalties for workers who work excess hours. CONSULTANT shall, as a penalty to CITY, forfeit $25 for each worker employed in the performance of this Agreement by CONSULTANT or by any subcontractor for each calendar day during which such worker is required or permitted to work more than 8 hours in any calendar day and 40 hours in any one calendar week in violation of the provisions of Division 2, Part 7, Chapter 1, Article 3 of the Labor Code. Pursuant to Labor Code Section 1815, work performed by CONSULTANT's employees in excess of 8 hours per day and 40 hours per week shall be permitted upon public work upon compensation for all hours worked in excess of 8 hours per day at not less than 1 ½ times the basic rate of pay.

11. The Project listed in the Agreement is subject to compliance monitoring and enforcement by the DIR.

12. CONSULTANT shall be responsible for each and every one of its subcontractors' compliance with Chapter 1, the DIR's rules and regulations, and Labor Code Sections 1860 and 3700. CONSULTANT shall include in the written contract between it and each subcontractor a copy of, and a requirement that each subcontractor shall comply with, those statutory provisions. CONSULTANT shall be required to take all actions necessary to enforce such contractual provisions and ensure subcontractors' compliance, including without limitation, conducting a periodic review of the certified payroll records of each subcontractor, and upon becoming aware of the failure of the subcontractor to pay its workers the specified prevailing rate of wages, CONSULTANT shall diligently take corrective action to halt or rectify any failure.

13. To the maximum extent, CONSULTANT shall hold harmless, defend (with counsel approved by the City Attorney) and indemnify CITY, its legislative bodies, and its officials, officers, employees and agents from any demand or claim for damages, compensation, fines, penalties or other amounts arising out of or incidental to any acts or omissions listed above by any person or entity (including CONSULTANT, its subcontractors, and each of their officials, officers, employees and agents) in connection with any work undertaken or in connection with the Agreement, including without limitation the payment of all attorneys' fees and other related costs. All duties of CONSULTANT under this Section shall survive Agreement termination.

FINANCE AND GOVERNANCE COMMITTEE
AGENDA REPORT

REPORTS
AGENDA ITEM NO. D.1

DATE: October 24, 2023

TO: Finance & Governance Committee

FROM: Jeff Pengilley, Community Development Director, (805) 385-8208, jeff.pengilley@oxnard.org

SUBJECT: Commercial Cannabis Financial Auditing Services Agreement with Avenu Insights & Analytics, LLC (10 minutes).

RECOMMENDATION

That the Finance and Governance Committee recommend that the City Council approve and authorize the Mayor to execute a 3 - year agreement (Agreement No. 3240018) with Avenu Insights & Analytics, LLC. ("Avenu"), in an amount not to exceed $570,000 for commercial cannabis financial auditing services.

Please click the following link to view the required Measure M pre-recorded presentation video:

BACKGROUND

The Oxnard City Code (OCC) allows the following cannabis uses: retail dispensaries (16 licenses); manufacturing (8 licenses); distribution (3 licenses); and testing laboratories (1 license). The OCC requires that after one full year of being in operation, all cannabis businesses will be subject to an annual audit. Based upon the OCC audit requirements and the timing associated with the opening of two retail cannabis operators (The Artist Tree and Releaf on Vine), two retail cannabis businesses will be required to submit an audit of their annual financial revenues in December 2023. The audit is required to be prepared by an independent certified public accountant, procured by the cannabis applicant, and submitted to the City for review and approval.

Given that the City does not have the technical expertise to audit cannabis business, in February 2023, the City issued a Request for Proposals (RFP) for cannabis auditing services. The City received a total of seven (7) proposals. Based upon the criteria identified in the RFP, City staff evaluated the proposals and selected three (3) firms to interview. Avenu was selected as the most qualified to perform the work due to their overall experience providing cannabis auditing services to other municipal organizations (see Attachment A). The scope associated with the cannabis audit review will include: verification of tax payments reported by cannabis businesses to the City and the California Department of Tax and Fee Administration (CDTFA), verification of the annual community benefits payment, verification of the ownership associated with each commercial cannabis business and an evaluation of each commercial cannabis businesses assets and liabilities.

On June 20, 2023, through a compliance fee study, the City established a Cannabis Compliance Fee (Ordinance No.3029), which included the cannabis permit renewal fee. In addition to the renewal fee, each cannabis business will be responsible for paying the City's cost to procure the review of the cannabis audit, plus the City's 15% administrative fee. The audit will be submitted when the applicant renews their permit. It is possible that a cannabis permit may be renewed pending securing an approved cannabis audit. The renewal process includes steps to secure approval of an audit post renewal of a cannabis permit.

The City negotiated the contract term with Avenu to provide commercial cannabis business audit services for 3-years (with an option for two 1-year extensions, for a total of 5 years) at a fixed cost of $7,500 per audit and a not to exceed total contract amount of $570,000. The contract maximum was established with the assumption that the cannabis program and business opening would gradually increase over the term of the agreement in alignment with the number of cannabis businesses allowed under the OCC. Through implementation of the cannabis program, including audit outcomes, it is possible that audit frequency may change. The City continues to evaluate the cannabis program, looking for ways to streamline the process, and facilitate business development. Any OCC changes, including changes in the frequency of the audit, would occur through an amendment to the OCC.

STRATEGIC PRIORITIES

This agenda item supports Economic Development strategy. The purpose of the Economic Development strategy is to focus on the retention and expansion of Oxnard businesses by increasing the skills and employability of our local workforce, invite new business investments, and target site-based redevelopment opportunities.

FINANCIAL IMPACT

The estimated cost of the contract over five years (including an option for two 1-year extensions) and the corresponding revenue is as follows:

FISCAL YEAR	EST.COST	EST. REVENUE (INC. 15% ADMIN FEE)
FY2023-24	$22,500	$22,838
FY2024-25	$82,500	$83,738
FY2025-26	$120,000	$121,800
FY2026-27	$172,500	$175,088
FY2027-28	$172,500	$175,088

There is sufficient FY2023-24 funding available from the existing Community Development operating budget. Funding of future years as well as anticipated revenue will be included in the recommended budget of each fiscal year.

For Finance Use Only: General Fund (Org. 1014101 Obj. 41450 & 53200)

Prepared by: Kathleen Mallory, Planning & Sustainability Manager

ATTACHMENTS

1. Draft Agreement No. 3240018 with Avenu Insights & Analytics, LLC
2. October 24, 2023 Presentation

PROFESSIONAL SERVICES AGREEMENT
BETWEEN
THE CITY OF OXNARD AND AVENU INSIGHTS & ANALYTICS, LLC

By This Professional Services Agreement ("Agreement"), the CITY of Oxnard ("CITY") agrees to engage the services of Avenu Insights & Analytics, LLC ("CONSULTANT"), and CONSULTANT agrees to perform the services for CITY as herein described, for the compensation, during the term, and otherwise subject to the covenants and conditions herein set forth. CITY and CONSULTANT may be individually referred to as "Party" or collectively as the "Parties."

1. SUMMARY DESCRIPTION OF SERVICES. Cannabis Financial Audit Services

This Agreement is for "on call" or "as needed" services as identified in Exhibit A-Scope of Services. The City does not guarantee that any services will be requested under this agreement or that any services requested under this agreement will reach the agreement amount listed in section 4. All "on call" or "as needed" services requested by the City shall be paid at the rates identified in Exhibit B-Rate and Cost Sheet.

2. PARTIES.

CITY of Oxnard ("CITY"), a general law and municipal corporation of the State of California, located at 300 West Third Street, Oxnard California 93030

Avenu Insights & Analytics, LLC ("CONSULTANT"), a corporation/LLC/LLP of the State of California, located at 5860 Trinity Parkway, Suite 120, Centerville, VA 20120

3. TERM OF AGREEMENT: From October 1, 2023 to September 30, 2026

3.1 Time is of the essence in this Agreement.

3.2 Any Optional Extension (initial term, plus any option to extend) shall not exceed a total of five (5) years. The CITY in its sole discretion may exercise the optional extension upon 60 days written notice to the CONSULTANT in accordance with Section 11 of this Agreement. CONSULTANT shall issue its written consent to the CITY's exercise of the option extension within 10 days of receipt of notice from the CITY. All Notices shall comply with section 20 of this Agreement.

3.3 The CITY shall have the option for (2) two consecutive (1) one-year extensions, in accordance with the scope of work and general terms and conditions of the CONSULTANT/Professional Services Agreement.

3.4 All services required of CONSULTANT under this Agreement shall be completed on or before the end of the term of the Agreement.

4. AGREEMENT AMOUNT NOT TO EXCEED: $570,000.00 for the term (from October 1, 2023 to September 30, 2026) of the Agreement.

5. AGREEMENT EXHIBITS.

The following documents memorialized below are the only exhibits to this agreement and are incorporated by reference as though fully set forth herein. In the event of a conflict between the Exhibits and this Agreement, the Agreement controls.

Exhibit A: Scope of Services
Exhibit B: Schedule of Compensation
Exhibit C: Insurance Requirements
Exhibit D: Living Wage Policy
Exhibit E: Prevailing Wage Policy

6. DESIGNATED REPRESENTATIVES.

The Designated Representatives listed below shall be authorized to act on behalf of the named Party, be responsible for negotiations and contractual matters, and coordinate with each other to perform the services under this Agreement. Additionally, CONSULTANT's services shall be performed or immediately supervised by the CONSULTANT's Representative:

CITY Designated Representative:
Name: Kathleen Mallory
Title: Planning & Sustainability Manager
Phone: 805-385- 8370
Email: Kathleen.mallory@oxnard.org
Mailing Address (if differs from above):
214 South C Street, Oxnard, CA 93030

CONSULTANT Designated Representative:
Name: Rachelle Arizmendi
Title: Account Executive
Phone: 213-200-6376
Email: rachelle.arizmendi@avenuinsights.com
Mailing Address (if differs from above):
5860 Trinity Parkway, Suite 120, Centreville, VA 20120

7. CONTRACTUAL PREREQUISITES.

7.1 This Agreement must first be executed by the CONSULTANT, after which the Agreement shall be approved as to form by the CITY Attorney, then executed by the Mayor, or an authorized person on behalf of the CITY, and if executed by the Mayor shall also be executed by the CITY Clerk.

7.2 CONSULTANT is advised that any recommendation for AGREEMENT award is not binding on CITY until the AGREEMENT is fully executed and approved by CITY.

7.3 A request for modification of the terms, prior to execution of the Agreement, must be made in writing and presented to the Designated Representative of the CITY prior to the time this Agreement is executed.

7.4 All proof of business license, insurance, and W-9 forms is required prior to execution of this Agreement.

7.5 CONSULTANT shall not perform any work under this Agreement until a proof of insurance has been provided to the City as required under Section 24 of this Agreement.

8. CONSULTANT'S SERVICES.

8.1 CONSULTANT shall perform the tasks, obligations, and services set forth in the "Scope of Services," attached to and incorporated into this Agreement as "Exhibit A." Once this Agreement is executed, the Scope of Services may only be modified by written Amendment pursuant to Section 12 of this Agreement.

8.2 The Services shall be coordinated with the designated City Project Manager set forth in Exhibit A subject to the direction of the City Manager or Department Director. CONSULTANT hereby designates its Project Manager as set forth in "Exhibit A" as the person responsible for the Services who shall coordinate with City's Project Manager in executing the scope of services under this Agreement.

9. COMPENSATION.

CITY shall pay CONSULTANT for the services performed pursuant to the terms of this Agreement in the time and manner set forth in the "Schedule of Compensation," attached to and incorporated into this Agreement as "Exhibit B." CITY shall pay SERVICE PROVIDER an amount not to exceed the amount is listed in Section 4 of this Agreement. Once this Agreement is executed, the Schedule of Compensation may only be modified by written Amendment pursuant to Section 12 of this Agreement, and may be subject to approval by the City Council.

10. PAYMENT & INVOICES.

The CITY shall pay all undisputed portions of any applicable invoice within forty-five (45) days after receipt of an invoice. In the event the CITY disputes one or more items in an invoice, the CITY shall, within forty-five (45) days after receipt of such invoice, notify the CONSULTANT of the item(s) being disputed and the reason(s) therefore. The CITY may withhold payment for such disputed items until resolution of the dispute.

10.1 Payment Request. CONSULTANT shall submit a payment request to CITY by the end of each calendar month listing the Services provided, costs of

those Services, and total amount due for the month. Invoices may be emailed to: ComDevAP@oxnard.org.

10.2 Non-Appropriation of Funds. Payments to be made to CONSULTANT by CITY for the Services performed within the current fiscal year are within the current fiscal budget and within an available, unexhausted and unencumbered appropriation of CITY. In the event CITY does not appropriate sufficient funds for payment of the Services beyond the current fiscal year, this Agreement shall cover payment for the Services only up to the conclusion of the last fiscal year in which CITY appropriated sufficient funds and shall automatically terminate at that fiscal year's conclusion.

10.3 CONSULTANT's acceptance of final payment made pursuant to this Agreement shall constitute a release of CITY from all claims and liabilities for compensation to CONSULTANT for anything completed, finished or relating to the Services. CITY's payment shall not constitute nor be deemed a release of the responsibility and liability of CONSULTANT for the accuracy and competency of the information provided and/or the Services performed hereunder, nor shall such payment be deemed to be an assumption of responsibility or liability by CITY for any defect or error in the Services performed by CONSULTANT and its employees, agents and Subcontracted CONSULTANTs.

10.4 CONSULTANT shall provide CITY with a completed Request for Taxpayer Identification Number and Certification, as issued by the Internal Revenue Service. If any sales tax is due for the Services performed by CONSULTANT or materials or products provided to CITY by CONSULTANT, CONSULTANT shall pay the sales tax. CITY shall not reimburse CONSULTANT for sales taxes paid by CONSULTANT.

11. OPTION TO EXTEND AGREEMENT.

When in the CITY's best interest, this Agreement may only be extended, if the City in its discretion exercises the option to extend pursuant to Section 3.2 and 3.3 of the Agreement. The initial term, plus any option to extend, shall not exceed a total of five (5) years. **If no option to extend the Agreement appears in sections 3.2 and 3.3, this Agreement shall not be extended.**

12. MODIFICATION OF AGREEMENT.

This Agreement may be amended, modified, or otherwise altered, or its provisions waived, only upon mutual consent of the Parties by written amendment, and as authorized by the Oxnard Municipal Code, Article IV, Sections 4-59 and 4-60.

13. TERMINATION OF AGREEMENT.

CITY may terminate this Agreement at any time, with or without cause and without penalty, upon thirty (30) calendar days' prior written notice pursuant to Section 31 of this agreement. Such termination shall be effective on the date specified in the notice, or if no date is specified, then thirty (30) calendar days from the date of the notice. CITY shall be liable to CONSULTANT only for work done by CONSULTANT up to and including the date of termination of this Agreement unless the termination is for cause, in which event CONSULTANT need be compensated only to the extent required by law. CONSULTANT may terminate this Agreement at any time during the term of the Agreement by giving the CITY sixty (60) calendar days' prior written notice.

14. INDEPENDENT CONTRACTOR

CONSULTANT is and shall at all times remain, as to CITY, a wholly independent contractor. Neither CITY nor any of its employees or agents shall have control over the conduct of CONSULTANT or any of its employees, except as stated in this Agreement. CONSULTANT has and shall retain the right to exercise full control over the employment, direction, means of performance, location, compensation and discharge of all persons assisting CONSULTANT. This Agreement shall not be interpreted to prevent or preclude CONSULTANT from rendering any services for CONSULTANT's own account or to any other person or entity as CONSULTANT in its sole discretion shall determine; provided, however, that performing such services shall not materially interfere with the Services the CONSULTANT shall perform for the CITY. The CITY retains the right to provide general instructions to and observe the CONSULTANT in the performance of all services done on behalf of the CITY.

CONSULTANT and its employees and agents have no authority, express or implied, to act on behalf of CITY in any capacity, to incur any debt, obligation or liability on behalf of CITY, bind CITY in any manner, or otherwise act on behalf of CITY as an agent. CONSULTANT and its employees are not employees of CITY. CONSULTANT and its employees are not entitled to receive from CITY any of the benefits or rights afforded employees of CITY, including but not limited to reserve leave, sick leave, vacation leave, holiday leave, compensatory leave, Public Employees Retirement System benefits, and health, life, dental, long-term disability and workers' compensation insurance benefits. CONSULTANT shall not, at any time or in any manner, represent that it or any of its agents or employees are in any manner agents or employees of CITY.

15. LAWFUL PERFORMANCE.

CONSULTANT shall abide by all Federal, State, and Local Laws and Regulations as may be related to the performance of duties under this Agreement. CONSULTANT, at its sole expense, shall obtain and maintain during the term of this Agreement, all appropriate permits, licenses, and certificates that may be required in connection with the performance of services under this Agreement.

16. SAFETY REQUIREMENTS.

CONSULTANT shall not perform any services for the CITY when the CONSULTANT is impaired by alcohol or a controlled substance. When there is reasonable cause to believe that any person has violated this provision, that person shall be immediately removed from the premises and be subject to any applicable civil and/or criminal penalties under the CITY's Code and/or under state law. All work performed under this Agreement shall be performed in such a manner as to provide safety to the public. The CITY reserves the right to issue restraining or cease and desist orders to CONSULTANT when unsafe or harmful acts are observed or reported relative to the performance of the work under this Agreement. The acceptance of CONSULTANT's work by CITY shall not operate as a release of the CONSULTANT from such standard of care and workmanship.

17. OWNERSHIP OF CONSULTANT'S WORK PRODUCT, CONFIDENTIALITY & DISCLOSURE.

CITY shall be the owner of any and all technical documents and records, including, computations, plans, correspondence, and/or other pertinent data and information, both hard copy and electronic, gathered or prepared by CONSULTANT in performance of this Agreement and shall be entitled to immediate possession of the same upon completion of the work under this Agreement, or at any earlier or later time when the same may be requested by CITY.

17.1. Records and Inspections. The CONSULTANT shall maintain full and accurate records, with respect to all services and matters covered under this Agreement. The CITY shall have free access at all reasonable times to such records, both hard copy and electronic, and the right to examine and audit the same and to make transcripts therefrom, and to inspect all program data, documents, proceedings, and activities.

17.2. Deliverables. CONSULTANT shall deliver to the CITY the studies, plans, specifications, or other documents as are identified in the Scope of Services; and CONSULTANT shall, upon completion of all work or termination of this Agreement, submit to the CITY all information developed in the course of the CONSULTANT's services. CONSULTANT shall, in such time and in such form as the CITY may require, furnish reports concerning the status of services required under this Agreement. CONSULTANT shall, upon request by CITY and upon completion or termination of this Agreement, deliver to the CITY all material furnished to CONSULTANT by the CITY.

17.3. Ownership – Generally. All inventions, discoveries, enhancements, changes, or improvements of computer programs developed pursuant to this Agreement shall be the property of the CITY, and all patents or copyrights shall be assigned to the CITY, unless otherwise agreed.

17.4. Ownership of Documents. Every report, draft, work product, map, record, and other document reproduced, prepared, or caused to be prepared by the CONSULTANT pursuant to or in connection with this Agreement shall be the exclusive property of the CITY.

17.5. Confidentiality. Information that is exempt from disclosure to the public is confidential. This includes information relating to the past, present, or future affairs of the CITY or information belonging to a third party whose information is in the CITY's possession or control under obligations of confidentiality. CONSULTANT may be granted access to information that is exempt from disclosure to the public (Government Code Section 6254 and 6254.16) and may contain "trade secrets" (see Government Code Section 6254.7(d)) when it is necessary for CONSULTANT to perform its obligations pursuant to this Agreement. If CONSULTANT is granted such access to confidential information, CONSULTANT shall not be considered to be a member of the public as that term is used in Government Code Section 6254.5.

17.6. Disclosure of Information. CONSULTANT shall not disclose, publish, or authorize others to disclose or publish, design data, drawings, specifications, reports, or other information pertaining to the projects assigned to CONSULTANT by the CITY or other information to which the CONSULTANT has had access during the term of this Agreement without the prior written approval of the CITY's Designated Representative during the term of this Agreement and for a period of two (2) years after the termination of this Agreement.

17.7. No Warranty. Other than an obligation upon the CITY to deal in good faith, the CITY makes no warranties and shall bear no liability or responsibility for errors or omissions in any Confidential Information disclosed under this Agreement or for any business decisions made by CONSULTANT in reliance on any Confidential Information disclosed under this Agreement.

18. ASSIGNMENT.

This Agreement is for the professional services of CONSULTANT. Any attempt by CONSULTANT to assign the benefits or burdens of this Agreement without the prior written approval of CITY shall be prohibited and shall be null and void. CONSULTANT's services pursuant to this Agreement shall be provided by the CONSULTANT's Designated Representative or directly under his/her supervision, and CONSULTANT shall not assign another to supervise the CONSULTANT's performance of this Agreement without the prior written approval of CITY, by and through the CITY's Designated Representative, which consent shall not be unreasonably withheld.

19. NOTICE OF BREACH AND OPPORTUNITY TO CURE.

Neither Party will be in breach of this Agreement where the breach is capable of being cured, or until written notice of the breach is received from the non-breaching

Party. The Party charged with breach will have thirty (30) calendar days from the date of receiving such notice in which to cure the breach or otherwise respond. If the circumstances leading to the charge that the Agreement was breached have not been cured or explained to the satisfaction of the other Party within thirty (30) days from the date on which the breaching Party received notice of breach, the non-breaching Party may terminate this Agreement.

20. NOTICE.

All notices given or required to be given pursuant to this Agreement shall be in writing and may be given by personal delivery or by first-class mail. Notice sent by mail shall be addressed to each Party's Designated Representative as set forth above in Section 6. When addressed in accordance with this Section, such notice shall be deemed given upon deposit in the United States mail, postage prepaid. In all other instances, notices shall be deemed given at the time of actual delivery. Changes may be made in the names or addresses of persons to whom notices are to be given by giving notice in the manner prescribed in this Section.

21. COVENANTS AND CONDITIONS.

Each term and each provision of this Agreement to be performed by CONSULTANT shall be construed to be both a covenant and a condition.

22. WAIVER.

CITY's review or acceptance of, or payment for, work product prepared by CONSULTANT under this Agreement will not be construed to operate as a waiver of any rights CITY may have under this Agreement or of any cause of action arising from CONSULTANT's performance. A waiver by CITY of any breach of any term, covenant, or condition contained in this Agreement will not be deemed to be a waiver of any subsequent breach of the same or any other term, covenant, or condition contained in this Agreement, whether of the same or different character.

23. INDEMNIFICATION, HOLD HARMLESS & DEFENSE.

23.1 As a separate and independent covenant from CONSULTANT's obligations under this section, CONSULTANT shall to the fullest extent permitted by law, immediately defend, indemnify, and hold harmless CITY, its legislative and advisory bodies, and the CITY's officials, directors, officers, employees, and agents (the "Indemnitees") from and against all liabilities regardless of nature, type, or cause, arising out of or resulting from or in connection with CONSULTANT's willful misconduct or negligent performance of this Agreement or CONSULTANT's failure to comply with any of its obligations contained in this Agreement. Liabilities subject to the duties to defend and indemnify include, without limitation, all claims, losses, damages, penalties, fines, and judgments; associated investigation and administrative expenses; defense costs, including

but not limited to reasonable attorneys' fees; court costs; and costs of alternative dispute resolution. CONSULTANT's obligation to indemnify applies unless it is adjudicated that any of the liabilities covered by this Section are the result of the sole active negligence or sole willful misconduct of any of the Indemnitees.

23.2 The provisions of this Subsection 23.2 apply only in the event that CONSULTANT is a design professional within the meaning of California Civil Code section 2782.8 ("Design Professional"). The term Design Professional, as defined in said section, is limited to licensed architects, licensed landscape architects, registered professional engineers, professional land surveyors, and the business entities that offer such services in accordance with the applicable provisions of the California Business and Professions Code.

23.3.1 Notwithstanding the provisions of Subsections 23.1 and 23.2 above, to the extent that the services to be provided under this Agreement are those of a Design Professional, CONSULTANT's duty to indemnify, hold harmless, and defend the Indemnitees shall be limited to the extent that any claims arise out of, pertain to, or relate to the negligence, recklessness, or willful misconduct of the CONSULTANT, its officers, agents, employees or subconsultants in the performance of the services described in this Agreement.

23.3.2 In no event shall the costs of defense charged to CONSULTANT exceed the CONSULTANT's proportionate percentage of fault, except as otherwise set forth in said Civil Code section 2782.8, the provisions of which are incorporated into this Agreement by this reference. Nothing in this Subsection 23.2 shall be construed to require CONSULTANT to provide indemnification for claims caused by the active negligence or willful misconduct of the Indemnitees.

23.4 The review, acceptance or approval of CONSULTANT's work or work product by any of the Indemnitees shall not affect, relieve or reduce CONSULTANT's indemnification or defense obligations. CONSULTANT waives any right of contribution against CITY or any of CITY's officers, employees, agents, or volunteers arising out of such failure to inspect, review, monitor, or supervise the work performed by CONSULTANT pursuant to this Agreement. The provisions of this Section shall not be restricted by and do not affect the provisions of this Agreement relating to Section 24. The CONSULTANT's obligations under this Section of the Agreement shall survive the termination of the Agreement.

23.5 CONSULTANT agrees to pay all required taxes on amounts paid to CONSULTANT under this Agreement, and to indemnify and hold CITY harmless from any and all taxes, assessments, penalties, and interest asserted against CITY by reason of the independent contractor relationship created by this Agreement. CONSULTANT shall be solely responsible for, and shall save CITY harmless from, all matters relating to the payment of CONSULTANT's

subcontractors, material suppliers, directors, officers, employees, agents and representatives, including compliance with social security requirements, federal and State income tax withholding, and all other regulations governing employer-employee relations, as applicable. CITY shall have the right to offset against the amount of any compensation due to CONSULTANT under this Agreement any amount due to CITY from CONSULTANT as a result of its failure to promptly pay to CITY any reimbursement or indemnification arising under this Section.

24. INSURANCE.

CONSULTANT shall obtain and maintain during the performance of any services under this Agreement the insurance coverages listed within "Exhibit C", which is attached hereto and incorporated herein by this reference, unless the Risk Manager waives, in writing, the requirement that CONSULTANT obtain and maintain such insurance coverages. Such insurance must be issued by a company satisfactory to the Risk Manager. CONSULTANT shall, before performance of any services pursuant to this Agreement, file with the Risk Manager evidence of insurance coverage as specified in "Exhibit C". Maintenance of insurance coverages by CONSULTANT is a material element of this Agreement. CONSULTANT'S failure to maintain or renew insurance coverages or to provide renewal evidence shall be considered a material breach of this Agreement.

25. LIVING WAGE REQUIREMENTS.

During the term of this Agreement, CONSULTANT understands and agrees that if Living Wages are applicable subject to the 2002 Oxnard City Council Living Wage Policy, attached as "Exhibit D" to this Agreement, CONSULTANT will pay and/or provide the wages and/or benefits required therein to all of its employees engaged in whole or in part in performing the services provided for by this Agreement. The duty to pay the correct wage is the responsibility of the CONSULTANT.

26. PREVAILING WAGE REQUIREMENTS.

26.1. Application. The payment of State prevailing wages as designated for Ventura County shall apply to public works projects. However, this section shall not apply to work performed on a public works project of twenty-five thousand dollars ($25,000) or less when the project is for construction, alteration, demolition, installation, or repair work; or to work performed on a public works project of fifteen thousand dollars ($15,000) or less when the project is for maintenance work. Prevailing wages are required to be paid to all workers, including subcontracted employees.

26.2. Compliance with California Department of Industrial Relations (DIR). To determine if this Agreement is subject to compliance monitoring and enforcement, go to:
https://www.dir.ca.gov/Public-Works/PublicWorksSB854FAQ.html

26.3. Contract Splitting. It is unlawful to split, or separate into small portions, work orders, projects, purchases, or public works projects for the purpose of evading these prevailing wage requirements.

26.4. Use of Prevailing Wages vs. Living Wages. In the event that there is a difference between the amount of wages to be paid under the CITY of Oxnard's local Living Wage requirements and the requirements of this provision, the wage rate that is the higher of the two shall be applicable to this Agreement. The duty to pay the correct wage is the responsibility of the CONSULTANT.

27. CONFLICT OF INTEREST

CONSULTANT covenants that it does not have any interest, nor shall it acquire any interest, directly or indirectly, which would conflict in any manner with the performance of CONSULTANT's services under this Agreement. CONSULTANT further covenants that in the performance of services under this Agreement, no officer, employee or agent of CONSULTANT having such interest shall be employed by it. In the event the CITY determines that CONSULTANT must disclose its financial interests by completing and filing a Fair Political Practices Commission Form 700, Statement of Economic Interests, CONSULTANT shall file such Form 700 with the CITY Clerk's Office pursuant to the written instructions provided by the CITY Clerk. Acquisition or maintenance of a conflicting interest by CONSULTANT may result in termination of this Agreement by the CITY.

28. DISPUTES.

Except as otherwise provided in these provisions, any dispute concerning a question of fact arising under this Agreement, shall be decided by the CITY's Designated Representative, who shall reduce this decision to writing and mail a copy to the CONSULTANT. The decision of the CITY's Designated Representative shall be final and conclusive unless CONSULTANT requests mediation within ten (10) calendar days. Pending final decision of a dispute, the CONSULTANT shall proceed diligently with the performance of the Agreement and in accordance with the decision of the CITY's Designated Representative.

29. DISPUTE RESOLUTION.

Should an unresolved dispute arise out of this Agreement, any Party may request that it be submitted to mediation. The Parties shall meet in mediation within a reasonable time not to exceed forty five (45) days of a request. The mediator shall be agreed to by the mediating Parties. In the absence of an agreement on a mediator, the Parties shall each submit one name from mediators listed by the American Arbitration Association, the California State Board of Mediation and Conciliation, or other agreed-upon service. The mediator shall be selected by a "blindfold" process. The cost of mediation shall be borne equally by both Parties. Neither Party shall be deemed the prevailing Party. No Party shall be permitted to file a legal action without first meeting in

mediation and making a good faith attempt to reach a mediated settlement. The mediation process, once commenced by a meeting with the mediator, shall last until agreement is reached by the Parties but not more than sixty (60) calendar days, unless the maximum time is extended in writing by both Parties.

30. AUDIT.

CITY shall have the option of inspecting, auditing and/or reproducing all records and other written materials: used by CONSULTANT in preparing its billings to CITY as a condition precedent to any payment to CONSULTANT; or for other purposes relating to the Agreement. CONSULTANT will promptly furnish all documents requested by CITY. Additionally, if this Agreement is in excess of $10,000, the State Auditor may examine and audit CONSULTANT for a period of 3 years after final payment under the Agreement. Regardless of whether a State audit is permitted, CONSULTANT shall maintain and preserve all such records for a period of at least 3 years after final payment under the Agreement or until an audit has been completed and accepted by CITY, whichever occurs later. CONSULTANT shall maintain all such records in CITY or to promptly reimburse CITY for all reasonable costs incurred in conducting the audit at a location other than in CITY, including but not limited to expenses for personnel, salaries, private auditor, travel, lodging, meals and overhead. CONSULTANT shall include a copy of this Section in all contracts with its subcontractors, and CONSULTANT shall be responsible for immediately obtaining those records or other written material from its subcontractors upon a request by the State Auditor and/or CITY.

31. ADVERTISING AND PUBLICITY

CONSULTANT shall not use the name of or refer to CITY directly or indirectly in any advertisement, news release, or professional or trade publication without prior written approval from the CITY Manager. This Section shall survive the termination of this Agreement.

32. NONDISCRIMINATORY EMPLOYMENT.

CONSULTANT shall not unlawfully discriminate against any individual based on race, color, religion or religious creed, national origin, ancestry, ethnic group identification, primary language, physical disability, mental disability, medical condition, genetic information, marital status, gender, gender identity, gender expression, sex, sexual orientation, age, immigration status, citizenship or military and veteran status. CONSULTANT understands and agrees that it is bound by and will comply with all legal nondiscrimination mandates. For every subcontractor who will perform Services, CONSULTANT shall be responsible for such subcontractor's compliance with this Section.

33. FORCE MAJEURE.

Neither the CONSULTANT nor the CITY shall be responsible for any delay caused by any contingency beyond their control, including, but not limited to, war or insurrection, walkouts by the Party's own employees, fires, natural calamities, pandemics, riots, or demands or requirements of governmental agencies other than the CITY.

34. GOVERNING LAW.

The terms of this Agreement shall be interpreted according to the laws of the State of California. Should litigation occur, venue shall be in the Superior Court of California, County of Ventura.

35. SEVERABILITY.

If any portion of this Agreement is declared by a court of competent jurisdiction to be invalid or unenforceable, then such portion will be deemed modified to the extent necessary in the opinion of the court to render such portion enforceable and, as so modified, such portion and the balance of this Agreement will continue in full force and effect and be enforceable.

36. INTEGRATED AGREEMENT.

This Agreement and the attached exhibits referenced herein to this Agreement represent the entire understanding between the Parties. No verbal agreement or implied covenant shall be held to vary the provisions of this Agreement. This Agreement shall bind and inure to the benefit of the Parties to this Agreement and any subsequent successors and assigns.

37. NO THIRD-PARTY BENEFICIARY.

This Agreement shall not be construed to be an agreement for the benefit of any third-party or parties, and no third party or parties shall have any claim or right of action under this Agreement.

38. AUTHORITY TO EXECUTE.

Each Party hereto expressly warrants and represents that through its Designated Representative it has the authority to execute this Agreement on behalf of its corporation, partnership, business entity, or governmental entity, and warrants and represents that the Designated Representative has the authority to bind each Party to the performance of its obligations hereunder.

39. EXECUTION – COUNTERPARTS.

This Agreement may be executed in any number of counterparts and each such duplicate counterpart shall constitute an original, but they shall not be effective nor

enforceable unless and until it is executed with the handwritten signature of an authorized representative of each of the relevant Parties. No counterpart shall be deemed to be an original or presumed delivered unless and until the counterpart executed by the other Party to this Agreement is in the physical possession of the Party seeking enforcement thereof.

40. INCONSISTENT OR CONFLICTING TERMS.

In the event of any contradictions or inconsistencies between any attached documents or exhibits incorporated by reference herein and the provisions of the Agreement itself, the terms of the Agreement shall control. Any exhibit that is attached and incorporated by reference shall be limited to the purposes for which it is attached, as specified in this Agreement. Any contractual terms or conditions contained in such exhibit imposing additional obligations on the CITY are not binding upon the CITY's Designated Representative unless specifically agreed to in writing, and initiated by CITY's Designated Representative, as to each additional contractual term or condition.

41. CAPTIONS AND HEADINGS.

The captions and headings contained in this Agreement are provided for identification purposes only and shall not be interpreted to limit or define the content, scope, or intent of the provisions described under the respective caption or heading.

42. ACKNOWLEDGEMENT.

By signing below, CONSULTANT acknowledges that it has reviewed the CITY's CONSULTANT/Professional Services Agreement terms and conditions and insurance requirements and that CONSULTANT hereby agrees to full compliance.

[Signatures on next page]

In witness whereof, the Parties have entered into this Agreement on the date as written in section 3 and upon signature of all Parties.

CITY OF OXNARD

☐John C. Zaragoza, Mayor[1] Date
☐Jennifer Yates, Purchasing Manager[2]

CONSULTANT

Paul Colangelo, CEO 9/12/23 Date

James Barkman, CFO [3] 9/14/23 Date

ATTEST:

Rose Chaparro, CITY Clerk Date
(only if Mayor authorizes)

APPROVED AS TO FORM:

Stephen M. Fischer, CITY Attorney (always required) Date

[1] The City Council must authorize and the Mayor must execute any agreement over $200,000.
[2] The Purchasing Agent may execute any authorized agreement up to $200,000.
[3] The City requires the following for any contract:

- For a corporation, the signatures of the Board President, CEO or Vice President and of the Board Secretary, Assistant Secretary, CFO or Assistant Treasurer;
- For an LLC, the signatures of at least two managers of the LLC (company directors, not lower-level managers); or
- For a partnership, the signature of a partner. If the partnership is a limited partnership, the signer must be a general partner.

If the company has a different structure, or if the above-listed persons are not the appropriate signers, please submit to the City Attorney legally-binding documentation stating who can sign and bind your company.

EXHIBIT A

PROFESSIONAL SERVICE AGREEMENT
(CITY of Oxnard and Avenu Insights & Analytics, LLC)

SCOPE OF SERVICES

Cannabis Financial Audit Services

At the request of the City's Project Manager, for each licensed cannabis business within the City, in accordance with Oxnard City Code requirements (Chapter 11 - Section: 11-476 and SEC. 11-414), Consultant will:

- Conduct an annual (one (1) time per year) financial audit of the businesses gross sales. The financial audit shall include an evaluation of each commercial cannabis business assets and liabilities.
- Verify quarterly tax payments reported for each cannabis business to determine if deficiencies exist between tax reporting provided to the City versus tax reporting provided to the State of California, Department of Tax and Fee Administration (CDTFA).
- Verify that each business is in compliance with the City's cannabis community benefits agreement which requires payment of 1% of the businesses gross revenues on an annual basis.

- The audit shall include the number of sales by the commercial cannabis business during the preceding 12-month period (provided on a per-month basis).

- Consultant will attend (virtually) quarterly meetings with City staff to discuss data, revenues, and analytical reports.

- Consultant shall prepare a report per business verifying the ownership associated with each commercial cannabis business and anyone owning or holding an interest in the commercial cannabis business. This is separate from all the officers, managers, employees, agents and volunteers currently employed or otherwise engaged by the commercial cannabis business.

- Consultant will review reporting provided to the CDTFA and determine adequacy and verification that the City is receiving the tax revenue required in accordance with the city's tax resolution.

Work Plan

In performing the financial audit services, Consultant will:

- Attend an Informational Kickoff meeting to meet with City staff to review and discuss potential audit candidates, audit approach and establish a mutually agreeable project timeline.

- Begin the audit process

- Meet with City staff on audit activities and findings, including, but not limited to:
    - Unexpected delays resulting from the business entity response or other causes
    - Significant errors or issues identified during the audit process
    - Cooperation issues with the business entity
- Meet with City staff to present the draft report for each business
- Prepare the final audit report, which will include information about each business, those in compliance, those not in compliance, and recommendations for corrective actions
- Present the audit summary – a written report with recommendations on possible administrative, technical and/or regulatory policy modifications that may improve future compliance

Commercial Cannabis Business Audit Approach

Consultant will conduct initial expedited analytical evaluations before starting a complete verification of the business operations, which will determine extent and depth of the full examination. The audit analysis can include, but is not limited to the following tasks:

1. Review of applicable provisions of the City's municipal code and resolutions adopted by the City.
2. Review business records filed with the City such as applications, operating agreements, compliance documents and tax returns.
3. Initiate communication with businesses to establish appropriate business contacts, Point of Sales systems (POS), product inventory and tracking systems, accounting data systems, physical operation procedures and methodology.
4. Examination of business operations and financial data to verify the accuracy of reported tax returns and compliance with city regulatory and administrative policies.
5. Prepare a draft audit report for each business entity, which will identify any tax deficiencies with a summary explaining how the error was established and suggestions on a resolution to ensure future compliance.
6. The draft report will first be discussed with City staff and then presented to the business entity, which will be provided an appropriate amount of time to review the audit report and respond to any audit findings.
7. Prepare a final audit report summarizing the findings, which will include information about the specific aspects of the business that were in compliance, those that were not in compliance, and recommendations for corrective actions. If relevant, Consultant will also include areas for continued monitoring.
8. Prepare an audit summary report upon completion of all the initial audits, which will provide recommendations to the City on possible administrative, technical and/or regulatory policy modification that may be considered to improve compliance with City operating and reporting requirements.

Audit Timeline

Per audit, Consultant estimates 20 hours total for proposed oversight fixed hours (Tasks 1, 6 & 8) and 30 hours for proposed annual audit hours for each business (Tasks 2, 3, 4, 5 & 7). The project duration is estimated at 60 days from obtaining access to the business data.

EXHIBIT B

PROFESSIONAL SERVICE AGREEMENT
(CITY of Oxnard and Avenu Insights & Analytics, LLC)

SCHEDULE OF COMPENSATION

Consultant will perform cannabis financial audit services at a rate of $150 per hour, with a not to exceed cost of $7,500 per audit.

EXHIBIT C

PROFESSIONAL SERVICES AGREEMENT
(CITY of Oxnard and Avenu Insights & Analytics, LLC)

INSURANCE REQUIREMENTS

Prior to contract approval, CONSULTANT/SERVICE PROVIDER/SELLER/BIDDER (hereafter referred to as "CONSULTANT") must procure, agree to maintain and supply evidence of insurance at the levels listed and in accordance with the other provisions listed in this document.

INSURANCE REQUIREMENTS FOR CONSULTANTS
(WITH ERRORS AND OMISSIONS REQUIREMENT)

1. Consultant shall obtain and maintain during the performance of any services under this Agreement the following insurance against claims for injuries to persons or damages to property which may arise from or in connection with the performance of services hereunder by Consultant, its agents, representatives, employees or subconsultants.

a. Commercial General Liability Insurance, including Contractual Liability, in an amount not less than $1,000,000 combined single limit for bodily injury and property damage for each claimant for general liability with coverage equivalent to Insurance Services Office Commercial General Liability Coverage (Occurrence Form CG 0001). If a general aggregate limit is used, that limit shall apply separately to the project or shall be twice the occurrence amount;

b. Business automobile liability insurance in an amount not less than $1,000,000 combined single limit for bodily injury and property damage for each claimant for automobile liability with coverage equivalent to Insurance Services Office automobile liability coverage (Occurrence Form CA0001) covering Code No. 1, "any auto;"

c. Professional liability/errors and omissions insurance appropriate to Consultant's profession to a minimum coverage of $1,000,000, with neither Consultant nor listed subconsultants having less than $500,000 individually. The professional liability/errors and omissions insurance must be project specific with at least a one year extended reporting period, or longer upon request.

d. Workers' compensation insurance in compliance with the laws of the State of California, and employer's liability insurance in an amount not less than $1,000,000 per claimant. Additionally, the workers' compensation policy shall include a waiver of all rights of subrogation which the insurer may have against the City.

2. Consultant shall, prior to performance of any services, file with the Risk Manager certificates of insurance with original endorsements effecting coverage required by this Exhibit INS-A. The certificates and endorsements for each insurance policy are to be signed by a person authorized by that insurer to bind coverage on its behalf. The certificates and endorsements are to be on the attached forms or on other forms approved by the Risk Manager. All certificates and endorsements are to be received and approved by the Risk Manager before commencement of services. City reserves the right to require complete certified copies of all required insurance policies at any time. The certificates of insurance and endorsements shall be sent via email. If you have not received your request or are having difficulty with electronic upload, contact insurance@oxnard.org

3. Consultant agrees that all insurance coverages shall be provided by a California admitted insurance carrier with an A.M. Best rating of A:VII or better and shall be endorsed to state that coverage may not be suspended, voided, canceled, or reduced in coverage or limits without 30 days' prior written notice to the Risk Manager. The Risk Manager shall not approve or accept any endorsement if the endorsement contains "best effort" modifiers or if the insurer is relieved from the responsibility to give such notice.

4. Consultant agrees that the commercial general liability and business automobile liability insurance policies shall be endorsed to name City, its City Council, officers, employees, agents and volunteers as additional insureds as respects: liability arising out of activities performed by or on behalf of Consultant; products and completed operations of Consultant; premises owned, occupied or used by Consultant; or automobiles owned, leased, hired or borrowed by Consultant. The coverage shall contain no special limitations on the scope of protection afforded to City, its City Council, officers, employees, agents and volunteers. **The General Liability Special Endorsement Form and Automobile Liability Special Endorsement Form attached to this Exhibit INS-A or substitute forms containing the same information and acceptable to the Risk Manager shall be used to provide the endorsements (ISO form CG 2010 11/85 or if not available, CG 2010 with an edition date prior to 01/04 <u>and</u> CG 2037).**

5. The coverages provided to City shall be primary and not contributing to or in excess of any existing City insurance or self-insurance coverages **(this must be endorsed)**. Additionally, the workers' compensation policy shall include a waiver of all rights of subrogation which the insurer may have against the City. Any failure to comply with reporting provisions of the policies shall not affect coverage provided to City, its City Council, officers, employees and volunteers. The insurance shall apply separately to each insured against whom claim is made or suit is brought, except with respect to the limits of the insurer's liability.

6. The insurer shall declare any deductibles or self-insured retentions to and be approved by the Risk Manager. At the option of the Risk Manager, either the insurer shall reduce or eliminate such deductibles or self-insured retentions as respects City, its City Council, officers, employees and volunteers, or the Consultant shall procure a bond guaranteeing payment of losses and related investigations, claim administration and defense expenses.

7. All insurance standards applicable to Consultant shall also be applicable to Consultant's subconsultants. Consultant agrees to maintain appropriate agreements with subconsultants and to provide proper evidence of coverage upon receipt of a written request from the Risk Manager.

9/23

INSTRUCTION FOR SUBMITTING INSURANCE CERTIFICATES AND ENDORSEMENT FORMS

Certificates of Insurance

The sample accord form on the following page is provided to facilitate your preparation and submission of certificates of insurance. You may use this or any industry form that shows coverage as broad as that shown on the attached sample. **Please note the certificate holder address must be as shown on the attached sample accord form with the contract number and insurance exhibit identification information completed.** Improperly addressed certificates may delay the contract start-up date because the City's practice is to return unidentifiable insurance certificates to the insured for clarification as to the contract number. **Cancellation provisions must be endorsed to the policy. Modifying the certificate does not change coverage or obligate the carrier to provide notice of cancellation.**

Endorsement Forms

Original endorsements are required for commercial general liability and business automobile liability insurance policies and must be attached to the applicable certificate of insurance. City preference is that the Consultant/insurer use the endorsement forms which are attached. Substitute forms will be accepted, however, as long as they include provisions comparable to the sample accord form.

INS-A.doc

ACORD CERTIFICATE OF INSURANCE

ISSUE DATE (MM/DD/YY)

PRODUCER

THIS CERTIFICATE IS ISSUED AS A MATTER OF INFORMATION ONLY AND CONFERS NO RIGHTS UPON THE CERTIFICATE HOLDER. THIS CERTIFICATE DOES NOT AMEND, EXTEND OR ALTER THE COVERAGE AFFORDED BY THE POLICIES BELOW.

CODE SUB-CODE

COMPANIES AFFORDING INSURANCE COVERAGE

INSURED

COMPANY LETTER A SPECIFY COMPANY NAMES IN THIS SPACE

COMPANY LETTER B

COVERAGES

THIS IS TO CERTIFY THAT THE POLICIES OF INSURANCE LISTED BELOW HAVE BEEN ISSUED TO THE INSURED NAMED ABOVE FOR THE POLICY PERIOD INDICATED, NOTWITHSTANDING ANY REQUIREMENT, TERM OR CONDITION OF ANY CONTRACT OR OTHER DOCUMENT WITH RESPECT TO WHICH THIS CERTIFICATE MAY BE ISSUED OR MAY PERTAIN, THE INSURANCE AFFORDED BY THE POLICIES DESCRIBED HEREIN IS SUBJECT TO ALL THE TERMS, EXCLUSIONS AND CONDITIONS OF SUCH POLICIES. LIMITS SHOWN MAY HAVE BEEN REDUCED BY PAID CLAIMS.

CO LTR	TYPE OF INSURANCE	POLICY NUMBER	POLICY EFFECTIVE DATE (MM/DD/YY)	POLICY EXPIRATION DATE (MM/DD/YY)	LIMITS
A	**GENERAL LIABILITY** [x] COMMERCIAL GENERAL LIABILITY [ ] CLAIMS MADE [x] OCCUR. [x] OWNER'S & CONTRACTOR'S PROT.				GENERAL AGGREGATE $1,000,000 PRODUCTS COMP/OP AGG. $1,000,000 PERSONAL & ADV. INJURY $1,000,000 EACH OCCURRENCE $1,000,000 FIRE DAMAGE (Any one fire) $ MED. EXPENSE (Any one person) $
A	**AUTOMOBILE LIABILITY** [x] ANY AUTO ALL OWNED AUTOS SCHEDULED AUTOS HIRED AUTOS NON-OWNED AUTOS GARAGE LIABILITY				COMBINED SINGLE LIMIT $1,000,000 BODILY INJURY (Per person) $ BODILY INJURY (Per accident) $ PROPERTY DAMAGE $
A	**EXCESS LIABILITY** UMBRELLA FORM OTHER THAN UMBRELLA FORM				EACH OCCURRENCE $ AGGREGATE $
A	**WORKERS' COMPENSATION AND EMPLOYERS' LIABILITY**				STATUTORY LIMITS EACH ACCIDENT $1,000,000 DISEASE-POLICY LIMIT $1,000,000 DISEASE-EACH EMPLOYEE $1,000,000
A	**OTHER** Errors and omissions insurance or malpractice insurance available for the insured's profession				Minimum coverage $1,000,000 Each consultant/ & listed sub-consultant $500,000

DESCRIPTION OF OPERATIONS/LOCATIONS/VEHICLES/RESTRICTIONS/SPECIAL ITEMS

CERTIFICATE HOLDER

CITY OF OXNARD % Evident ID, Inc.
8520 Allison Pointe Blvd. Ste 223
PMB 5210
Indianapolis, Indiana 462500-4299 US

CANCELLATION

SHOULD ANY OF THE ABOVE DESCRIBED POLICIES BE CANCELED BEFORE THE EXPIRATION DATE THEREOF, THE ISSUING COMPANY WILL ~~ENDEAVOR TO~~ MAIL 30 DAYS WRITTEN NOTICE TO THE CERTIFICATE HOLDER NAMED TO THE LEFT, ~~BUT FAILURE TO MAIL SUCH NOTICE SHALL IMPOSE NO OBLIGATION OR LIABILITY OF ANY KIND UPON THE COMPANY, ITS AGENTS OR REPRESENTATIVES.~~

AUTHORIZED REPRESENTATIVE

Rev. 9/23

INS-A.doc

GENERAL LIABILITY SPECIAL ENDORSEMENT FOR THE CITY OF OXNARD (the "City")

SUBMIT IN DUPLICATE

ENDORSEMENT NO.	ISSUE DATE (MM/DD/YY)

PRODUCER

Telephone:

NAMED INSURED

POLICY INFORMATION:
Insurance Company:
Policy No.:
Policy Period: (from) (to)
LOSS ADJUSTMENT EXPENSE ☐ Included in Limits
☐ In Addition to Limits

☐ Deductible ☐ Self-Insured Retention (check which) of $ _____
with an Aggregate of $_____ applies to _____
coverage. ☐ Per Occurrence ☐ Per Claim (which)

APPLICABILITY. This insurance pertains to the operations, products and/or tenancy of the named insured under all written agreements and permits in force with the City unless checked here ☐ in which case only the following specific agreements and permits with the City are covered

CITY AGREEMENTS/PERMITS

TYPE OF INSURANCE

GENERAL LIABILITY
☐ COMMERCIAL GENERAL LIABILITY ☐ Claims Made
☐ COMPREHENSIVE GENERAL LIABILITY Retroactive Date _____
☐ OWNERS & CONTRACTORS PROTECTIVE ☐ Occurrence

OTHER PROVISIONS

COVERAGES	LIABILITY LIMITS IN THOUSANDS $	
	EACH OCCURRENCE	AGGREGATE
☐ GENERAL		
☐ PRODUCTS/COMPLETED OPERATIONS		
☐ PERSONAL & ADVERTISING INJURY		
☐ FIRE DAMAGE		
☐ _____		
☐ _____		

CLAIMS: Underwriter's representative for claims pursuant to this insurance.

Name: _____
Address: _____
_____
Telephone: (____) _____

In consideration of the premium charged and notwithstanding any inconsistent statement in the policy to which this endorsement is attached or any endorsement now or hereafter attached thereto, insurance company agrees as follows:

INSURED. The City, its officers, agents, employees and volunteers are included as insureds with regard to liability and defense of suits arising from the operations, products and activities performed by or on behalf of the named insured.

CONTRIBUTION NOT REQUIRED. As respects: (a) work performed by the named insured for or on behalf of the City; or (b) products sold by the named insured to the City; or (c) premises leased by the named insured from the City, the insurance afforded by this policy shall be primary insurance as respects the City, its officers, agents, employees or volunteers; or stand in an unbroken chain of coverage excess of the named insured's scheduled underlying primary coverage. In either event, any other insurance maintained by the City, its officers, agents, employees or volunteers shall be in excess of this insurance and shall not contribute with it.

SEVERABILITY OF INTEREST. This insurance applies separately to each insured against whom claim is made or suit is brought except with respect to the company's limits of liability. The inclusion of any person or organization as an insured shall not affect any right which such person or organization would have as a claimant if not so included.

CANCELLATION NOTICE. With respect to the interests of the City, this insurance shall not be canceled, or materially reduced in coverage or limits except after thirty (30) days prior written notice by receipted delivery has been given to the City.

PROVISIONS REGARDING THE INSURED'S DUTIES. Any failure to comply with reporting provisions of the policy or breaches or violations of warranties shall not affect coverage provided to the City, its officers, agents, employees or volunteers.

SCOPE OF COVERAGE. This policy, if primary, affords coverage at least as broad as:

Insurance Services Office Commercial General Liability Coverage, "occurrence" form CG0001; or

If excess, affords coverage which is at least as broad as the primary insurance form CG0001.

Except as stated above nothing herein shall be held to waive, alter or extend any of the limits, conditions, agreements or exclusions of the policy to which this endorsement is attached.

ENDORSEMENT HOLDER

CITY OF OXNARD % Evident ID, Inc.
8520 Allison Pointe Blvd. Ste 223
PMB 5210
Indianapolis, Indiana 462500-4299 US

AUTHORIZED REPRESENTATIVE

☐ Broker/Agent ☐ Underwriter ☐ _____

I _____ (print/type name), warrant that I have authority to bind the above-mentioned insurance company and by my signature hereon do so bind this company to this endorsement.

Signature _____
(original signature required)
Telephone: (____) _____ Date Signed: _____

Rev. 9/23 INS-A.doc

AUTOMOBILE LIABILITY SPECIAL ENDORSEMENT FOR THE CITY OF OXNARD (the "City")

SUBMIT IN DUPLICATE

ENDORSEMENT NO.	ISSUE DATE (MM/DD/YY)

PRODUCER

Telephone:

NAMED INSURED

POLICY INFORMATION:
Insurance Company:
Policy No.:
Policy Period: (from) (to)
LOSS ADJUSTMENT EXPENSE ☐ Included in Limits
☐ In Addition to Limits

☐ Deductible ☐ Self-Insured Retention (check which) of $ _____ with an Aggregate of $_____ applies to coverage. ☐ Per Occurrence ☐ Per Claim (which)

APPLICABILITY. This insurance pertains to the operations, products and/or tenancy of the named insured under all written agreements and permits in force with the City unless checked here ☐ in which case only the following specific agreements and permits with the City are covered:

CITY AGREEMENTS/PERMITS

TYPE OF INSURANCE

☐ COMMERCIAL AUTO POLICY
☐ BUSINESS AUTO POLICY
☐ OTHER

OTHER PROVISIONS

LIMIT OF LIABILITY

$ _____ per accident, for bodily injury and property damage.

CLAIMS: Underwriter's representative for claims pursuant to this insurance.
Name: _____
Address: _____
_____
Telephone: ( ) _____

In consideration of the premium charged and notwithstanding any inconsistent statement in the policy to which this endorsement is attached or any endorsement now or hereafter attached thereto, insurance company agrees as follows:

1. **INSURED.** The City, its officers, agents, volunteers and employees are included as insureds with regard to liability and defense of suits arising from the operations, products and activities performed by or on behalf of the named insured.

CONTRIBUTION NOT REQUIRED. As respects: (a) work performed by the named insured for or on behalf of the City; or (b) products sold by the named insured to the City; or (c) premises leased by the named insured from the City, the insurance afforded by this policy shall be primary insurance as respects the City, its officers, agents, employees or volunteers; or stand in an unbroken chain of coverage excess of the named insured's scheduled underlying primary coverage. In either event, any other insurance maintained by the City, its officers, agents, employees or volunteers shall be in excess of this insurance and shall not contribute with it.

SEVERABILITY OF INTEREST. This insurance applies separately to each insured against whom claim is made or suit is brought except with respect to the company's limits of liability. The inclusion of any person or organization as an insured shall not affect any right which such person or organization would have as a claimant if not so included.

CANCELLATION NOTICE. With respect to the interests of the City, this insurance shall not be canceled, or materially reduced in coverage or limits except after thirty (30) days prior written notice by receipted delivery has been given to the City.

PROVISIONS REGARDING THE INSURED'S DUTIES. Any failure to comply with reporting provisions of the policy or breaches or violations of warranties shall not affect coverage provided to the City, its officers, agents, employees or volunteers.

SCOPE OF COVERAGE. This policy, if primary, affords coverage at least as broad as:

Insurance Services Office Automobile Liability Coverage, "occurrence" form CA0001, code ("any auto"); or

If excess, affords coverage which is at least as broad as the primary insurance form referenced in the preceding section (1).

Except as stated above nothing herein shall be held to waive, alter or extend any of the limits, conditions, agreements or exclusions of the policy to which this endorsement is attached.

ENDORSEMENT HOLDER

CITY OF OXNARD % Evident ID, Inc.
8520 Allison Pointe Blvd. Ste 223
PMB 5210
Indianapolis, Indiana 462500-4299 US

AUTHORIZED REPRESENTATIVE

☐ Broker/Agent ☐ Underwriter ☐ _____

I _____ (print/type name), warrant that I have authority to bind the above-mentioned insurance company and by my signature hereon do so bind this company to this endorsement.

Signature _____
(original signature required)

Telephone: ( ) Date Signed _____

Rev. 9/23

EXHIBIT D

PROFESSIONAL SERVICES AGREEMENT
(CITY of Oxnard and Avenu Insights & Analytics, LLC)

LIVING WAGE POLICY

Pursuant to the Living Wage Policy adopted July 9, 2002 by the City Council and effective October 1, 2002, the City Manager and City Attorney are directed to include the following language in all standard CONSULTANT/Professional services contracts and all unique trade services contracts governed by the Living Wage Policy.

A. CONSULTANT shall compensate any employee of CONSULTANT who provides services under this Agreement in accordance with the Living Wage Policy, attached hereto and incorporated herein by reference as the Living Wage Policy Exhibit. While this Agreement is in effect, CONSULTANT shall pay such employee no less than $18.22 per hour for each hour that such employee provides services under this Agreement. In addition, while this Agreement is in effect, CONSULTANT shall provide to such employee no less than 96 hours of paid leave per calendar year.

B. CONSULTANT agrees to post, at a location readily accessible to those employees providing services to the CITY, a copy of the Living Wage Policy adopted by City Council on July 9, 2002 and effective October 1, 2002.

C. If CONSULTANT fails to compensate such employee pursuant to the Living Wage Policy, the City Manager or designee shall terminate this Agreement on written notice to CONSULTANT, effective immediately.

D. In addition, if CONSULTANT fails to comply with the Living Wage Policy in any manner, CONSULTANT shall pay to CITY a fine of $500 and shall pay to any employee providing services under this Agreement a penalty of three times the amount or value of the compensation owed to such employee under the Living Wage Policy. CONSULTANT shall pay such fine and penalty within fifteen (15) calendar days after the City Manager or designee provides written notice to CONSULTANT of the amount owed.

CITY OF OXNARD LIVING WAGE REQUIREMENTS
EFFECTIVE JULY 1, 2022

CONSULTANT shall compensate any employee of CONSULTANT who provides services under this Agreement in accordance with the Living Wage Policy, attached hereto and incorporated herein by reference as Exhibit D. While this Agreement is in effect, CONSULTANT shall pay such employee no less than $18.22 per hour for each hour that such employee provides services under this Agreement. This hourly rate shall be adjusted on July 1, 2023, and each July 1 thereafter, according to the percentage change in the Consumer Price Index, all items, prepared by the Bureau of Labor Statistics for the Los Angeles area relating to all urban consumers (CPI-U), index base 1982-84=100, comparing May of the previous year to May of the current year. In addition, while this Agreement is in effect, CONSULTANT shall provide to such employee no less than 96 hours of paid leave per calendar year.

a. CONSULTANT agrees to post, at a location readily accessible to those employees providing services to the CITY, a copy of the Living Wage Policy adopted by the Oxnard City Council on July 9, 2002 and effective October 1, 2002.

b. If CONSULTANT fails to compensate such employee pursuant to the Living Wage Policy, the City Manager or designee shall terminate this Agreement on written notice to CONSULTANT, effective immediately.

c. In addition, if CONSULTANT fails to comply with the Living Wage Policy in any manner, CONSULTANT shall pay to CITY a fine of $500 and shall pay to any employee providing services under this Agreement a penalty of three times the amount or value of the compensation owed to such employee under the Living Wage Policy. CONSULTANT shall pay such fine and penalty within fifteen (15) calendar days after the City Manager or designee provides written notice to CONSULTANT of the amount owed.

EXHIBIT E

PROFESSIONAL SERVICES AGREEMENT
(CITY of Oxnard and Avenu Insights & Analytics, LLC)

PREVAILING WAGE

1. CONSULTANT acknowledges that the Project defined in the Agreement between CONSULTANT and CITY is a "public work" as defined in Division 2, Part 7, Chapter 1 of the California Labor Code ("Chapter 1"), and that this Agreement is subject to Chapter 1 and the rules and regulations established by the Director of Industrial Relations ("DIR") implementing such statutes. CONSULTANT shall perform the Project as a public work. CONSULTANT shall comply with and be bound by all the terms, rules and regulations described in Chapter 1 and the DIR's rules and regulations as though set forth in full herein.

2. Pursuant to Labor Code Section 1773.2, copies of the prevailing rate of per diem wages for each craft, classification, or type of worker needed to perform the Agreement are on file at City Hall and will be made available to any interested party on request. CONSULTANT acknowledges receipt of a copy of the DIR determination of such prevailing rate of per diem wages, and CONSULTANT shall post such rates at each job site covered by this Agreement.

3. CONSULTANT is required to post job site notices, as prescribed by regulation. See Labor Code Section 1771.4(a)(2).

4. CONSULTANT shall comply with and be bound by the provisions of Labor Code Sections 1774 and 1775 concerning the payment of prevailing rates of wages to workers and the penalties for failure to pay prevailing wages. CONSULTANT shall, as a penalty to CITY, forfeit not more than $200 for each calendar day or portion thereof for each worker paid less than the DIR's determined prevailing rates for the work or craft in which the worker is employed pursuant to this Agreement by CONSULTANT or any subcontractor. The Labor Commissioner shall determine the amount of the penalty as described in Section 1775.

5. CONSULTANT shall comply with Labor Code Section 1776, which requires CONSULTANT and each subcontractor to (1) keep accurate payroll records and verify such records in writing under penalty of perjury, (2) certify and make such payroll records available for inspection, and (3) inform CITY of the location of the records.

6. CONSULTANT shall comply with Labor Code Sections 1777.5, 1777.6 and 1777.7 and California Administrative Code Title 8, Section 200 et seq. concerning the employment of apprentices on public works projects for all apprenticeable occupations. Before commencing work under this Agreement, CONSULTANT shall provide CITY with a copy of the information submitted to any applicable apprenticeship program. Within 60 days after concluding the Project, CONSULTANT

and each of its subcontractors shall submit to CITY a verified statement of the journeyman and apprentice hours performed under this Agreement.

7. CONSULTANT may not be debarred or suspended throughout the Agreement Term pursuant to Labor Code Section 1777.1 or 1777.7. If he, she or it becomes debarred or suspended in the Agreement Term, CONSULTANT must immediately notify CITY.

8. CONSULTANT is not qualified to bid on, be listed in a Bid proposal, or engage in the performance of any contract for public work, as defined in Labor Code Sections 1720 through 1861, unless currently registered and qualified to perform public work pursuant to Labor Code Section 1725.5. CONSULTANT shall continue without interruption to stay registered and qualified to perform public work pursuant to Section 1725.5 for the duration of the term of this Agreement. This provision does not apply to construction, alteration, demolition, installation or repair work of $25,000 or less or to maintenance work of $15,000 or less.

9. CONSULTANT acknowledges that 8 hours labor constitutes a legal day's work. CONSULTANT shall comply with and be bound by Labor Code Section 1810.

10. CONSULTANT shall comply with and be bound by Labor Code Section 1813 concerning penalties for workers who work excess hours. CONSULTANT shall, as a penalty to CITY, forfeit $25 for each worker employed in the performance of this Agreement by CONSULTANT or by any subcontractor for each calendar day during which such worker is required or permitted to work more than 8 hours in any calendar day and 40 hours in any one calendar week in violation of the provisions of Division 2, Part 7, Chapter 1, Article 3 of the Labor Code. Pursuant to Labor Code Section 1815, work performed by CONSULTANT's employees in excess of 8 hours per day and 40 hours per week shall be permitted upon public work upon compensation for all hours worked in excess of 8 hours per day at not less than 1 ½ times the basic rate of pay.

11. The Project listed in the Agreement is subject to compliance monitoring and enforcement by the DIR.

12. CONSULTANT shall be responsible for each and every one of its subcontractors' compliance with Chapter 1, the DIR's rules and regulations, and Labor Code Sections 1860 and 3700. CONSULTANT shall include in the written contract between it and each subcontractor a copy of, and a requirement that each subcontractor shall comply with, those statutory provisions. CONSULTANT shall be required to take all actions necessary to enforce such contractual provisions and ensure subcontractors' compliance, including without limitation, conducting a periodic review of the certified payroll records of each subcontractor, and upon becoming aware of the failure of the subcontractor to pay its workers the specified prevailing rate of wages, CONSULTANT shall diligently take corrective action to halt or rectify any failure.

13. To the maximum extent, CONSULTANT shall hold harmless, defend (with counsel approved by the City Attorney) and indemnify CITY, its legislative bodies, and its officials, officers, employees and agents from any demand or claim for damages, compensation, fines, penalties or other amounts arising out of or incidental to any acts or omissions listed above by any person or entity (including CONSULTANT, its subcontractors, and each of their officials, officers, employees and agents) in connection with any work undertaken or in connection with the Agreement, including without limitation the payment of all attorneys' fees and other related costs. All duties of CONSULTANT under this Section shall survive Agreement termination.

Commercial Cannabis Financial Auditing Services Agreement with Avenu Insights & Analytics, LLC

Kathleen Mallory, Planning & Sustainability Manager
Community Development Department

Finance & Governance Committee
October 24, 2023

CITY OF OXNARD CALIFORNIA

Background

- Oxnard City Code (OCC) allows the following cannabis uses:
  - Retail dispensaries (16 licenses);
  - Manufacturing (8 licenses);
  - Distribution (3 licenses); and
  - Testing laboratories (1 license).

- OCC requires after one year of operation, all commercial cannabis businesses will be subject to an annual financial audit.

- Financial audit required to be prepared by an independent certified public accountant, procured by the cannabis applicant, and submitted to the City for review and approval.

Background

- City does not have technical expertise to audit cannabis business. February 2023, City issued Request for Proposals (RFP) for cannabis auditing services.

- City received seven (7) proposals. Based on criteria within RFP, three (3) firms were interview by staff.

- Avenu was selected as the most qualified to perform the work due to their overall experience providing cannabis financial auditing services to other municipal organizations.

Background

- Scope associated with the cannabis audits will include:
  - Verification of tax payments reported by the cannabis businesses to the City and the California Department of Tax and Fee Administration (CDTFA);
  - Verification of the annual community benefits payment;
  - Verification of the ownership; and
  - Evaluation of assets and liabilities.

Background

- June 20, 2023, City Council approved a compliance fee study to cover the cost of the audit (Ordinance No.3029), which included the cannabis permit renewal fee.

- Each cannabis business responsible for paying the City's cost to procure the review of the cannabis financial audit, plus the City's 15% administrative fee.

- Financial audit fee will be submitted when the applicant renews their commercial cannabis business permit/annually.

- Renewal process includes steps to secure approval of an audit post renewal of cannabis permit.

Background

- City negotiated the contract term with Avenu to lock the cost for a 3-year term (with an option for two 1-year extensions/lock for 5-years) = fixed cost $7,500 per audit, plus 15% City admin. processing fee.

- Not to exceed total contract amount of $570,000.

- Contract maximum was established understanding that cannabis program/business openings would gradually increase over the next five years; and not exceed the number of cannabis businesses allowed under the OCC.

Background

- City staff will continue to evaluate cannabis program, including audit outcomes; it is possible changes to financial audit frequency may occur in the future.

- City continues to evaluate the cannabis program; developing ways to streamline the process, and facilitate business development.

- Potential OCC changes, including changes in the frequency of the financial audit, would occur through an amendment to the OCC.

Financial Impact

- Estimated cost of the contract over five years (including an option for two 1-year extensions) and the corresponding revenue is as follows:

Fiscal Year	Estimated Cost	Estimated Revenue (Inc. 15% Admin Fee)
FY 2024	$22,500	$22,838
FY 2025	$82,500	$83,738
FY 2026	$120,000	$121,800
FY 2027	$172,500	$175,088
FY 2028	$172,500	$175,088

- There is sufficient FY2023-24 funding available from the existing Community Development (CD) operating budget.
- Future year funding, and anticipated revenue will be included in the recommended CD budget request per fiscal year.

Recommendation

That the Finance and Governance Committee recommend that the City Council approve and authorize the Mayor to execute a 3- year agreement (Agreement No. 3240018) with Avenu Insights & Analytics, LLC. (“Avenu”), in an amount not to exceed $570,000 for commercial cannabis financial auditing services.

Questions?

Commercial Cannabis Financial Auditing Services Agreement with Avenu Insights & Analytics, LLC

Kathleen Mallory, Planning & Sustainability Manager
Community Development Department

City Council
November 21, 2023

CITY OF OXNARD CALIFORNIA

Background

- Oxnard City Code (OCC) allows the following cannabis uses:
  - Retail dispensaries (16 licenses);
  - Manufacturing (8 licenses);
  - Distribution (3 licenses); and
  - Testing laboratories (1 license).

- OCC requires after one year of operation, all commercial cannabis businesses will be subject to an annual financial audit.

- Financial audit required to be prepared by an independent certified public accountant, procured by the cannabis applicant, and submitted to the City for review and approval.

Background

- City does not have technical expertise to audit cannabis business. February 2023, City issued Request for Proposals (RFP) for cannabis auditing services.

- City received seven (7) proposals. Based on criteria within RFP, three (3) firms were interview by staff.

- Avenu was selected as the most qualified to perform the work due to their overall experience providing cannabis financial auditing services to other municipal organizations.

Background

- Scope associated with the cannabis audits will include:
  - Verification of tax payments reported by the cannabis businesses to the City and the California Department of Tax and Fee Administration (CDTFA);
  - Verification of the annual community benefits payment;
  - Verification of the ownership; and
  - Evaluation of assets and liabilities.

Background

- June 20, 2023, City Council approved a compliance fee study to cover the cost of the audit (Ordinance No.3029), which included the cannabis permit renewal fee.

- October 24, 2023, the Finance and Governance Committee voted 2-0 (1 Council member absent) to approve the staff recommendation and to forward the item for Council approval.

- Each cannabis business responsible for paying the City's cost to procure the review of the cannabis financial audit, plus the City's 15% administrative fee.

- Financial audit fee will be submitted when the applicant renews their commercial cannabis business permit/annually.

Background

- Renewal process includes steps to secure approval of an audit post renewal of cannabis permit.
- City negotiated the contract term with Avenu to lock the cost for a 3-year term (with an option for two 1-year extensions/lock for 5-years) = fixed cost $7,500 per audit, plus 15% City admin. processing fee.
- Not to exceed total contract amount of $570,000.
- Contract maximum was established understanding that cannabis program/business openings would gradually increase over the next five years; and not exceed the number of cannabis businesses allowed under the OCC.

Background

- City staff will continue to evaluate cannabis program, including audit outcomes; it is possible changes to financial audit frequency may occur in the future.

- City continues to evaluate the cannabis program; developing ways to streamline the process, and facilitate business development.

- Potential OCC changes, including changes in the frequency of the financial audit, would occur through an amendment to the OCC.

Financial Impact

- Estimated cost of the contract over five years (including an option for two 1-year extensions) and the corresponding revenue is as follows:

Fiscal Year	Estimated Cost	Estimated Revenue (Inc. 15% Admin Fee)
FY 2023 - 2024	$22,500	$25,875
FY 2024 - 2025	$82,500	$94,875
FY 2025- 2026	$120,000	$138,000
FY 2026 - 2027	$172,500	$198,375
FY 2027 - 2028	$172,500	$198,375

- There is sufficient FY2023-24 funding available from the existing Community Development (CD) operating budget.
- Future year funding, and anticipated revenue will be included in the recommended CD budget request per fiscal year.

Recommendation

That the City Council approve and authorize the Mayor to execute a 3- year agreement (Agreement No. 3240018) with Avenu Insights & Analytics, LLC. (“Avenu”), in an amount not to exceed $570,000 for commercial cannabis financial auditing services.

CITY OF
OXNARD
CALIFORNIA

Questions?

CITY COUNCIL AGENDA REPORT

REPORTS
AGENDA ITEM NO. M.2

DATE: November 21, 2023

TO: City Council

FROM: Jeff Pengilley, Community Development Director, (805) 385-8208, jeff.pengilley@oxnard.org

SUBJECT: Revision to the Planning Commission Rules and Procedures (Bylaws) (20 minutes)

RECOMMENDATION

That the City Council approve a Resolution adopting proposed revisions to the Planning Commission Rules and Procedures (Bylaws) with staff's recommended changes.

(The Finance & Governance Committee approved 2-0 (Council Member Basua absent) on October 24, 2023 to approve the staff recommendation and to forward the item for Council approval.)

Please click the following link to view the required Measure M pre-recorded presentation video:
https://youtu.be/YZQEF_GXtXg

BACKGROUND

The Planning Commission Bylaws establish the Rules and Procedures for the Planning Commission, including, but not limited to, the purpose of the organization, who are its members, how officers are elected and resign, how meetings are conducted, communication protocols, and rules of conduct. The Planning Commission has the ability to change their Bylaws provided that the Bylaws are consistent with the Planning Commission's Duties as outlined within the current Bylaws. Section XIV of the current Bylaws state: *"The rules and procedures may be amended at any regular meeting of the Commission by a majority of the members of the Commission, provided that the amendment has been submitted in writing at a previous meeting."* The Planning Commission's Rules and Procedures (Bylaws) were last revised and adopted on July 18, 2019 (Planning Commission Resolution No. 2019-23 (Attachment 1)) to change the start time of the meeting from 7:00pm to 6:00pm.

On April 15, 2021, the Planning Commission requested a Study Session to review the Planning Commission Rules and Procedures regarding the role of "Subcommittees," "Amendment of Rules and Procedures" in the and other general revisions.

The Rules and Procedures (Bylaws) Subcommittee was created by the Planning Commission on May 20, 2021. The subcommittee met five times between the Planning Commission meetings starting June 3, 2021, through August 5, 2021.

On August 5, 2021, the subcommittee moved to approve a resolution recommending the Planning Commission's adoption of revised Bylaws. On August 19, 2021, the Planning Commission voted 6-0, with one commissioner absent to approve Resolution 2021-21, establishing the revised Bylaws, subject to approval by the City Council.

Following approval by the Planning Commission, the Bylaws were reviewed by the City of Oxnard Attorney's Office. As a result of that review, staff recommends minor changes to address minor clean ups and possible conflict with other legal requirements. The redlines for these changes are provided in Attachment 3.

Because the Planning Commission Bylaws have specific references to Robert's Rules of Order, staff did not bring the

Planning Commission Bylaws for consideration by the Finance and Governance Committee until after the Court of Appeals issued its ruling on Measure M (which mandated the City use Robert's Rule of Order) on February 17, 2023 and after the California Supreme Court declined to review the Court of Appeals' decision regarding Measure M on April 26, 2023.

ANALYSIS/DISCUSSION

The proposed Bylaws, which are provided in Attachment 2, are a comprehensive update intended to reflect best practices and procedures of the Planning Commission, including those imposed by Measure M. The update also reorganizes the Bylaws into a more formalized layout. As a result, the changes cannot be shown line by line, therefore staff has summarized the primary changes by "Rule":

1. **RULE 1 - TITLE**
This new section was added to establish the official title of the Commission as the "Planning Commission of the City of Oxnard, California".

2. **RULE 2 -PREFACE**
This new section was added to establish the purpose and intent of the proposed Bylaws. However, as shown in Attachment 3, after further review by the City Attorney's Office, staff is recommending the minor changes to provide clarity of scope and be consistent with City language in other documents.

3. **RULE 3 - GENERAL PROVISIONS**
This section was relocated from Section 1 of the current Bylaws. The proposed Bylaws adds the requirement that in addition to the Bylaws, each new Commission receive a copy of Robert's Rules of Order, Newly Revised, and training on the Ralph M. Brown Act. The section also adds the language that the Planning Commission adopts the Bylaws to govern the conduct of its meetings. All other requirements are consistent with the current Bylaws.

4. **RULE 4 - MEETINGS**
This section was relocated from Section 2 of the current Bylaws. The proposed Bylaws formalizes the requirement to approve an annual calendar in the prior year. It also adds the requirements of the City's Sunshine Ordinance, which requires that the legislative body and public shall have the agenda and attachments available 7 days before the regular meeting. All other requirements are consistent with the current Bylaws.

5. **RULE 5 - MEETINGS AND HEARING PROCEDURES**
This section incorporates both existing languages from sections 3 and 4 of the current Bylaws, as well as new language.

- Section A has been added to address the general requirements for each public hearing, including who is responsible for presiding over the meeting and accessibility of meetings in person and virtually.
- Section B establishes that a quorum consists of four commissioners, consistent with the current Bylaws. However, the proposed Bylaws add new procedures for what to do in the absence of a quorum due to absences. The proposed Bylaws also add procedural requirements for establishing a quorum when the absence of a quorum is a result of abstentions due to conflicts of interest. However, as shown in Attachment 3, after further review by the City Attorney's Office, staff is recommending one change to clarify all members must be present to trigger the procedures for re-establishing a quorum.
- Section C is consistent with the requirements of the current Bylaws.
- Section D incorporates the standard public meeting procedures, including rules for public comments, such as incorporating the three (3) minute minimum time limit as required by Measure M.
- Section E is consistent with the current Bylaws but has been revised to clarify that the approval of minutes shall occur under the consent agenda.
- Section F has been added to provide rules and procedures for Ex Parte Declarations for Public Hearings.
- Sections G, H, I and J are consistent with the current Bylaws.

- Section K has been revised to change the adjournment time from 11:00 p.m. to 10:00 p.m. unless extended by two-thirds of the Planning Commission present and eligible. This is consistent with City Council procedures.

6. RULE 6 - CONDUCT OF PUBLIC HEARING

This section was relocated from section 5 of the current Bylaws. The purpose section was added to reflect the goals and purpose of the Planning Commission, as it relates to creating an open and public meeting. Paragraph two of section B was added to allow for those making a threat of violence to be referred to the Oxnard Police Department. Section C has been updated to incorporate current practices. The primary changes include allowing for a 15-minute presentation by applicant teams and allowing for both the staff and applicants to respond to public testimony. Sections D, E, and F are consistent with the current Bylaws. However, as shown in Attachment 3, after further review by the City Attorney's Office, staff is recommending the removal of those restrictions due to concerns over potential conflicts with the Brown Act.

7. RULE 7 - COMMUNICATIONS AND REPORTS OF THE COMMISSION

This section was relocated from Section 6 of the current Bylaws. Section A is consistent with the current Bylaws. Section B was revised to add limitations on font size, spacing, and page limits on written materials submitted for public comment. However, as shown in Attachment 3, after further review by the City Attorney's Office, staff is recommending the removal of those restrictions due to concerns over potential conflicts with the Brown Act.

8. RULE 8 - ELECTION AND DUTIES OF OFFICERS

This section was relocated from Section 7 of the current Bylaws. The section has been revised to include rules and procedures for the election of Chair and Vice-Chair. The section also has been revised to include procedures for unanticipated vacancies which allow for the Planning Commission to vote on a replacement, who would serve until the next regular election. Language has also been added to establish protocols for what to do in the event both the Chair and Vice-Chair are absent. Pursuant to the new rules, the immediate past chair shall preside at the meeting. If the immediate past chair is not present, the most senior member of the Commission shall perform the duties of the Chair. Lastly, procedures for the removal of an elected officer by at least a two-thirds vote of the Planning Commission when all members are present.

9. RULE 9 - SEATING ARRANGEMENT

This section was relocated from Section 12 of the current Bylaws. The section is generally consistent with the current Bylaws but have been revised to base the seating arrangement for all members except for the Chair and Vice-Chair to be based on seniority.

10. RULE 10 - RESTRICTION ON REPRESENTATION

This section was relocated from Section 8 of the current Bylaws. This section is consistent with the current Bylaws.

11. RULE 11 - CONDUCT OF COMMISSION MEMBERS

This new section was added to establish the expectations for the decorum of the Planning Commission and require that they are familiar with the Parliamentary Procedures.

12. RULE 12 - RECORD OF MEETINGS

This section was relocated from Section 9 of the current Bylaws. This section is consistent with the current Bylaws.

13. RULE 13 - SUBCOMMITTEES

This section was relocated from Section 10 of the current Bylaws. This section has been revised to require that the subcommittee have a minimum of 2 members and clarify that the Subcommittee is still subject to the Planning Commission and subject to the commission's authority, direction, and rules.

14. RULE 14 - PARLIAMENTARY PROCEDURE

This section was relocated from Section 11 of the current Bylaws. This section is consistent with the current Bylaws.

15. RULE 15 - RESIGNATION

This section was relocated from Section 13 of the current Bylaws. This section is consistent with the current Bylaws.

16. RULE 16 - ADOPTION AND AMENDMENT OF RULES AND PROCEDURES

This section was relocated from Section 14 of the current Bylaws. This section is revised to include the requirement that upon adoption or amendment of the Bylaws by the Planning Commission, the Bylaws shall be presented to the City Council for adoption.

Subsequent Staff Changes to the Bylaws

Following approval by the Planning Commission, the Bylaws were reviewed by the City of Oxnard Attorney's Office. As a result of that review, staff is recommending minor changes to Rules 2, 5, 6, and 7 to address minor clean ups and possible conflict with other legal requirements, such as the Brown Act. The redlines of these changes are provided in Attachment 3. As shown, many of the changes are minor changes in nature and do not alter the substance of the proposed Bylaws. Two changes that do result in substantive changes are in Rule 6.B.1 and Rule 7.B.1. Under Rule 6.B.1, staff is recommending the following change:

"No member of the public shall engage in conduct that disrupts, disturbs, or impedes the Commission meeting's orderly conduct. Such behavior may include making loud, threatening, abusive, personal, impertinent, or profane remarks. The Chair or a majority of the Commission present members may order any person who engages in such to be silent. If such an order is given, such person ~~shall~~ may be barred from further communication with the Commission during that meeting or be required to leave the meeting room."

Under Rule 7.B.1, staff is recommending the following change:

1. *"The Commission encourages the public to prepare and send written communications that may assist the Commission in its deliberations on an item. The correspondent ~~shall~~ is requested to provide fifteen copies, no larger than page size 11x17 of all written material for members, the recording secretary, staff, file, and the public ~~with the below specifications:~~*

    a. ~~*Font Size: Minimum 12-point font.*~~
    b. ~~*Spacing: Single*~~
    c. ~~*Page Limitation (double-sided equivalent):*~~

        i. ~~*3 days prior to meeting by 5:00 P.M.: 5 pages maximum, including exhibits*~~
        ii. ~~*Between 3 days prior to meeting at 5:00 P.M. to the meeting: 1 page maximum, including exhibits"*~~

Both of these edits are requested to address the potential conflicts with the Brown Act, as it has the potential to limit the public's ability to participate in the public process before the Planning Commission.

STRATEGIC PRIORITIES

This agenda item supports the Organizational Effectiveness strategy. The purpose of the Organizational Effectiveness strategy is to reinforce, stabilize, improve, and strengthen the organizational foundation of the City in order to build a modern, high-functioning City government that effectively and efficiently supports the operating departments in providing high-quality services and programs for our residents and businesses.

FINANCIAL IMPACT

There is no financial impact associated with the approval of the Planning Commission Bylaws.

COMMITTEE OUTCOME

The Finance & Governance Committee approved 2-0 (Council Member Basua absent) on October 24, 2023 to approve the staff recommendation and to forward the item for Council approval.

Prepared by: Joe Pearson II, AICP, Planning & Environmental Services Manager

ATTACHMENTS

1. Current Bylaws Approved July 18, 2019
2. Proposed Bylaws Recommended by Planning Commission August 19, 2021
3. Proposed Bylaws with Staff Recommendations
4. Proposed Resolution
5. Presentation

RESOLUTION NO. 2019-23 (Revised 7.18.2019)

RESOLUTION OF THE PLANNING COMMISSION OF THE CITY OF OXNARD ESTABLISHING RULES AND PROCEDURES FOR THE CONDUCT OF MEETINGS

The Planning Commission of the City of Oxnard ("Commission") resolves to adopt the following rules and procedures to govern the conduct of its meetings:

I. RECEIPT OF RULES AND PROCEDURES

Upon appointment, each member of the Commission shall receive a copy of these rules and procedures.

II. MEETINGS

A. Regular Meetings

Regular meetings of the Commission shall be held twice a month on the first and third Thursday of each month. The regular meetings shall commence at ~~7:00 p.m.~~ **6:00 p.m.** in the City Council Chambers.

B. Agenda Review Meetings

Prior to a regularly scheduled meeting, the Commission may convene an agenda review meeting. The purpose of this meeting is for the Commission to review those matters on the regular meeting agenda and for the members of the Commission to ask questions of staff and indicate to staff what additional information would be helpful to the Commission in considering an agenda item.

C. Special Meetings

Special meetings of the Commission may be called by the chair or a majority of the members of the Commission in accordance with the requirements of the Ralph M. Brown Act.

D. Brown Act

All meetings of the Commission shall be governed by the Ralph M. Brown Act.

III. QUORUM/VOTING REQUIREMENTS

A. A quorum of the Commission shall be four members. A quorum shall be present in order for the Commission to conduct business.

B. Unless otherwise specified by State law, an affirmative vote of a majority of the members present and eligible to vote shall be required to adopt a resolution including, but not limited to:

1. Approval or denial of a:

   a. Adoption of mitigated negative declaration or a negative declaration
   b. Certification of an environmental impact report
   c. Special use permit
   d. Planned development permit
   e. Development plan
   f. Variance
   g. Coastal development permit
   h. Major modification to an existing permit

2 Recommendation for approval or denial of a:
   a. Zone change
   b. Tentative map
   c. Development agreement
   d. Resolution of intention for an annexation or zone change

C. No Proxy

Absent members may not vote by proxy on any item before the Commission at any meeting.

D. Failure of Item

If any item fails to receive the number of votes required by subsection IIIB above, this failure shall constitute denial or recommendation for denial of the item under consideration.

IV. ORGANIZATION OF COMMISSION AGENDAS

A. Agenda Format

The Commission's regular meeting agenda shall be organized in accordance with and contain the headings listed in this section.

B. Preliminary Matters

The agenda of each meeting of the Commission shall include appropriate preliminary items, such as "Roll Call," and "Pledge of Allegiance."

C. Public Comments

1. The agenda of each meeting of the Commission shall include an item entitled "Public Comments."

2. When the chair calls the public comments during a regular meeting,

members of the public may address the Commission on matters that are within the subject matter jurisdiction of the Commission and that do not appear on the agenda as public hearing items.

3. When the chair calls the public comments item during a special meeting, members of the public may address the Commission only on matters that are on the agenda for the special meeting.

4. Each member of the public speaking on the public comments item shall be limited to three minutes, unless additional time is granted by the chair or a majority of the Commission.

D. Reading of Agenda

1. Staff shall announce the matters that are on the agenda and, for each matter, state whether the matter is ready to be heard or if other action is requested.

2. Any member of the Commission may move that a matter be continued. Upon receiving a second, such motion shall be considered and voted upon.

3. The chair may at any time re-order the agenda without a vote of the Commission. Any member of the Commission may move that the agenda be re-ordered. Upon receiving a second, such motion shall be considered and voted upon. If such motion passes, the chair may not re-order the agenda in a manner contrary to such motion.

E. Approval of Minutes

Minutes of previous meetings shall be approved at a subsequent Commission meeting. Members not present at a meeting for which minutes are being considered may choose, at their discretion, to participate or abstain from the approval of those minutes.

F. Consent Agenda

1. The consent portion of the agenda shall include minor or routine items, whether continued public hearings, new public hearings, requests for resolutions of intention, or other matters.

2. a. When the consent portion of the agenda is called, the chair shall ask the members if they have questions or if discussion is required. Staff may respond to routine questions from members of the Commission concerning items on the consent agenda. If there are substantial questions by members of the Commission, an item may be removed from the consent agenda and considered separately.

b. If there are public hearing items on the consent agenda, the chair

shall open a single public hearing for all such items. The chair shall not open individual public hearings for each item or permit consideration of each matter individually unless the item is removed from the consent agenda.

c. Any member of the Commission may move that a matter on the consent agenda be removed from the consent agenda and be considered separately under either continued public hearings or new public hearings. Upon receiving a second, this motion shall be voted upon without discussion.

3. The Commission may act on the consent agenda by one motion and a second and a roll call vote.

G. Continued Public Hearings

If not heard on the consent agenda, a continued public hearing shall be resumed at the point of the public hearing at which such matter was continued. If the public testimony portion of the public hearing had been closed, public testimony may be reopened upon a motion and second that is then approved by a vote of the Commission.

H. New Public Hearings

New public hearings shall be conducted in accord with the subsection V(C), below.

I. Reports; Study Sessions

Staff may present reports to the Commission on items that do not require a public hearing or schedule study sessions to solicit the Commission's input on matters within the Commission's jurisdiction.

J. Planning Commission Business

In addition to considering any matter that is listed on the agenda under this heading, any member of the Commission may:

1. Make a brief announcement;

2. Briefly report on his or her own activities; or

3. Move that a matter be placed on a future agenda for consideration by the Commission.

K. Planning Manager Comments

In addition to presenting any matter that is listed on the agenda under this heading,

the Planning Manager may make a brief report on upcoming activities of the Commission or public events.

L. Adjournment

1. Commission meetings shall adjourn by 11:00 p.m. unless extended as set forth in the next subsection.

2. If a motion to extend the meeting after 11:00 p.m. is passed by at least two-thirds of the members of the Commission who are present and eligible to vote upon such motion, the Commission may hear and consider any matter on the agenda after 11:00 p.m.

V. CONDUCT OF MEETINGS

A. Disruptive Public Speakers

No member of the public shall engage in conduct that disrupts, disturbs or impedes the orderly conduct of the Commission meeting. Such conduct may include making loud, threatening, abusive, personal, impertinent or profane remarks. The chair or a majority of the members of the Commission present may order any person who engages in such to be silent. If such an order is given, such person shall be barred from further communication with the Commission during that meeting or be required to leave the meeting room.

B. No Action

The Commission shall not take action on any item not appearing on the agenda unless the action is authorized by the Ralph M. Brown Act.

C. Public Hearings

1. Order of presentation

Unless otherwise directed by the chair, the order of presentation of evidence or testimony, oral and written, on any public hearing item shall be as follows:

a. Chair opens the public hearing.
b. Staff makes a brief presentation, including summary of the item, an analysis of the issues and a recommendation.
c. Members question staff and raise any new issues.
d. If present, applicant may make a presentation and shall be available for questions from the Commission. Commission may proceed whether or not applicant is present.
e. Members question applicant.
f. Chair invites public testimony.
g. Applicant responds to public testimony.

h. Chair closes hearing to public testimony.
i. Summation by staff, upon request by chair.
j. Members deliberate on the item.
k. Members vote on the item.

2. Oral Testimony

All oral testimony received at meetings of the Commission shall be directed to the chair. All oral testimony from one person shall be limited to three minutes, provided, however, that the chair may grant additional time to an applicant, an appellant, a staff member, a consultant to the City, a representative of a neighborhood council, or a representative of another public agency.

3. Debate and Questions

The chair shall not allow debate among members of the public. Any person wishing to direct a question to another person shall submit such question to the chair, who may, at his or her discretion, ask the question. The chair may prohibit a member of the public from speaking on an issue more than once during any hearing.

4. Rules of Evidence

Public hearings held by Commission need not be conducted according to the rules of evidence contained in the California Evidence Code. The following rules of evidence shall apply:

a. The Commission may consider any evidence that is the sort of evidence that responsible persons are accustomed to rely upon in the conduct of serious affairs.

b. All evidence shall be directly related to the item under consideration.

c. Persons testifying before the Commission shall be encouraged to submit their testimony and comments in writing for the record.

VI. COMMUNICATIONS AND REPORTS TO THE COMMISSION

A. Information Provided by Staff

1. Customarily, staff reports and other information related to a regular meeting shall be provided to the Commission on the Monday preceding a Thursday meeting.

2. Staff may provide the Commission with supplemental information closer to the time of or at a meeting and the agenda item need not be continued.

3. As provided in Government Code section 54957.5, agendas, staff reports, supplemental information and other writings distributed to all, or a majority, of the members of the Commission in connection with a matter subject to discussion or consideration at a Commission meeting shall be made available for public inspection or copying without delay, unless such writings are exempt by law from public disclosure.

B. Written Communications from the Public

1. The Commission encourages the pubic to prepare and send written communications that may assist the Commission in its deliberations on an item. The correspondent shall provide fifteen copies of all written material for members, the recording secretary, staff, file, and the public.

2. The Commission shall refer to staff all such written communications, including e-mails, regarding a subject or matter not appearing on the agenda.

VII. ELECTION AND DUTIES OF OFFICERS

A. During the first regular meeting of the Commission held in every calendar year or during the first regular meeting after appointment of the members of the Commission by the City Council, the members of the Commission shall elect one member as chair and another as vice-chair, to serve for one year or until a successor is appointed, unless either is earlier removed from such positions by majority vote of the members of the Commission or by the City Council.

B. Duties and Responsibilities of Officers

1. The chair shall:

a. Preside at all meetings and conduct the meetings as specified herein.

b. Re-order the agenda as necessary.

c. Represent the Commission at meetings of the City Council, other public agencies and at civic events. The chair shall not purport to represent or speak on behalf of the Commission at such meetings or events without obtaining the consent of the Commission in the form of a motion passed at a regular or special meeting of the Commission.

d. Sign resolutions adopted by the Commission and verify the accuracy of the contents.

e. Call special meetings.

2. In the absence of the chair, the vice-chair shall perform the duties of the chair.

3. In the absence of both the chair and vice-chair, the immediate past chair shall preside at the meeting.

VIII. RESTRICTION ON REPRESENTATION

No member shall purport to represent or speak on behalf of the Commission without obtaining the consent of the Commission in the form of a motion passed at a regular or special meeting of the Commission.

IX. RECORD OF MEETINGS

A. A minute record of all proceedings before the Commission shall be prepared and preserved by staff.

B. Minutes shall be prepared in the form and format prescribed by the City Council for citizen advisory groups.

C. All reports and written communications directed to the Commission shall be made a part of the permanent record of the Commission.

D. All motions considered by the Commission shall be recorded whether they pass or fail.

E. Members of the Commission wishing to have specific comments regarding an item reflected in the minutes and preserved for the record shall state, prior to making the comment, that the comment is "for the record."

F. Draft minutes of meetings shall be presented by the recording secretary to the Commission for correction and approval as soon as practical.

X. SUBCOMMITTEES

With the approval of a majority of the members of the Commission, the chair may appoint members of the Commission to subcommittees for the purpose of making recommendations to the full Commission on land use policy matters or such other matters as the chair may deem appropriate.

XI. PARLIAMENTARY PROCEDURE

In conducting meetings, the chair shall be guided by, but is not required to strictly adhere to, Robert's Rules of Order, Newly Revised.

XII. SEATING ARRANGEMENT

The seating arrangement for the Commission shall be as follows:

A. The chair shall be seated in the middle of the dais. The vice-chair shall sit immediately to the chair's right.

B. After the election of officers, the outgoing chair shall be seated at the outside seat on the side where a vacancy is created due to the election of a new chair and vice-chair.

C. When a member of the Commission leaves the Commission, the members on the side where the former member was seated, move toward the chair and the newly appointed member is seated at the last chair on that side.

XIII. RESIGNATION

Any member of the Commission desiring to resign from the Commission shall submit a written resignation to the City Clerk.

XIV. AMENDMENT OF RULES AND PROCEDURES

These rules and procedures may be amended at any regular meeting of the Commission by a majority of the members of the Commission, provided that the amendment has been submitted in writing at a previous meeting.

PASSED AND ADOPTED by the Planning Commission of the City of Oxnard on this 18th day of July, 2019:

Deidre Frank, Chairman

I hereby certify that the foregoing is a true copy of the Resolution adopted by the Planning Commission of the City of Oxnard at a meeting held this 18th day of July 2019 and carried by the following vote:

AYES: Commissioners: Meyer, Sanchez, Dozier, Vice Chair Chua, Chair Frank

NOES: Commissioner:

ABSENT: Commissioner: Huber, Furhring

ATTEST: _____
Jeff Lambert, AICP, Acting Secretary

RESOLUTION NO. 2021-21 (Revised 8.19.2021)

RESOLUTION OF THE PLANNING COMMISSION OF THE CITY OF OXNARD ESTABLISHING RULES AND PROCEDURES FOR THE CONDUCT OF MEETINGS

To adopt rules and procedures of the Planning Commission pursuant to Section A of Rule XIV of these Commission rules in the City of Oxnard.

Resolved that the Rules and Procedures of the Planning Commission of the City of Oxnard shall be:

RULE 1

TITLE

A. The official title of this Commission shall be "Planning Commission of the City of Oxnard, California".

RULE 2

PREFACE

A. The Planning Commission shall adopt written rules and regulations as to the time, place and date of its regular meetings and shall adopt such rules and regulations as it deems necessary to conduct its business including rules of procedure. Such rules and regulations shall not be inconsistent with the laws of the State of California or with the ordinances, resolutions, or regulations of the City of Oxnard. These rules and procedures are prepared to serve this purpose.

The City Council of the City of Oxnard established the Planning Commission and granted to it responsibilities in the area of land use, redevelopment issues, and planning permit decisions. These rules and procedures are intended to assist and be used by the Planning Commission in performing its duties and conducting its meetings. If a conflict arises between these rules and procedures and the City of Oxnard Municipal Code, the Code shall control.

RULE 3

GENERAL PROVISIONS

A. The Planning Commission of the City of Oxnard (hereinafter in these rules referred to as the "Commission") adopts the following rules and procedures to govern the conduct of its meetings.

B. Upon appointment:

1. Each member of the Commission shall receive a copy of these rules and procedures, and upon amendment.

2. Each member shall receive a copy of the Robert's Rules of Order, Newly Revised.
3. Each member shall receive training on the Ralph M. Brown Act.

RULE 4

MEETINGS

A. Calling of Meetings
   1. The Commission shall regularly meet on the first and third Thursday of each month. The regular meeting shall commence at 6:00 p.m. in the City Council Chambers, and as may be allowed by State law.
   2. The Commission shall approve an annual calendar in the prior year.
   3. Special meetings shall be called and convened by the Chair or majority of the members as provided by Rule 5.
   4. The Ralph M. Brown Act shall govern all meetings of the Commission.
B. Notice for Meetings
   1. The Commission meetings shall comply with Ordinance No. 2948 (Sunshine Ordinance), and the legislative body and public shall have the agenda and attachments available 7 days before the regular meeting.

RULE 5

MEETING AND HEARING PROCEDURES

A. In general
   1. Meetings and hearings of the Commission shall be called to order and presided over by the Chair or, in the Chair's absence, by the Vice-Chair to carry out such duties.
   2. Meetings and hearings of the Commission shall be open to the public unless closed under the Commission's Counsel direction.
   3. Any meeting or hearing of the Commission that is open to the public shall be open to coverage by television broadcast, online through the city website, and YouTube channel.
   4. No person other than a member of the Commission or city staff may stand in or be seated at the Council Chambers' dais area unless the Chair determines otherwise.
B. Quorum
   1. A quorum of the Commission shall be four members.
   2. A quorum shall be present in order for the Commission to conduct business.
   3. Absence of a quorum
      a. In the absence of a quorum at any meeting, such meeting shall be adjourned to the next regular meeting date by the Chair, majority of members present, or staff.
      b. A meeting may be declared adjourned for absence of a quorum after a 15-minute period has elapsed from the scheduled time of the start of the meeting.

c. A meeting may also be declared adjourned in advance if the absence notifications received by staff provided for the absence of a quorum.
d. Adjournment may be declared by the Chair, Vice-Chair, or staff.

4. Exception to absence of quorum because of abstentions due to a conflict of interest:
   a. If enough Commissioners abstain due to a conflict of interest so as to lose a quorum, the Commission shall exercise the rule of necessity to regain a quorum.
   b. Otherwise disqualified Commissioners shall be chosen by lot until a quorum is reached.
   c. The Commissioners so chosen shall continue to participate in that matter until its conclusion.

C. Voting
1. No vote may be conducted on any item before the Commission unless the Commission's requisite (4) number of members is present.
2. No vote by any member of the Commission on any item may be cast by proxy.
3. Unless otherwise specified by State law, an affirmative vote of a majority of the members present and eligible to vote shall take action on any items.
4. If any item fails to receive a majority vote, it will be considered denied or recommended for denial.

D. Meeting procedures
1. The Chair shall call the meeting to order and announce the date, time, and meeting type.
2. Each Commission meeting shall include preliminary items, such as "Roll Call" and "Pledge of Allegiance."
3. Each meeting shall have a time for the public to speak entitled "Public Comments on items not on the Agenda." The public will also be allowed to speak on all items listed on the agenda.
4. When the Chair calls for public comments during a regular meeting, the public member may address the Commission on matters within the Commission's subject matter jurisdiction and that do not appear on the agenda as a listed item.
5. When the Chair calls for public comments during a special meeting, the public member may address the Commission on matters within the Commission's subject matter jurisdiction and that only appear on the agenda as a listed item.
6. Each member of the public is allowed a minimum of three (3) minutes to speak, but additional time may be granted by the Chair or majority of the members.
7. The Commission shall not take action on any item not appearing on the agenda unless the action is authorized by the Ralph M. Brown Act.

E. Consent Agenda
   1. This portion of the agenda shall include minor or routine items, whether previous meeting minutes, or other matters.
   2. When the consent portion of the agenda is called, the Chair shall ask the members if they have questions or if a discussion is required. Staff may respond to routine inquiries from members of the Commission concerning items on the consent agenda. If there are substantial questions by members of the Commission, an item may be removed from the consent agenda and considered separately.
   3. Any member of the Commission may move that a matter on the consent agenda be removed from the consent agenda and be considered separately.

F. Ex Parte Declarations for Public Hering Items
   1. Commissioners are discouraged from suggesting any change to any project to the applicant or staff before the project is considered by the Commission as a whole.
   2. To ensure that all Commissioners receive the same information relative to a project that will be reviewed by the Commission, third party contacts are discouraged.
   3. The below should be disclosed by the Commissioner at the Commissione meeting prior to the item being considered:
      a. Ex Parte Communications
      b. Site Visits
      c. Conflict of Interest
      d. Financial Impacts

G. Continued Public Hearings
   1. A continued public hearing shall be resumed at the point of the public hearing at which such matter was continued. If the public testimony portion of the public hearing had been closed, public testimony may be reopened upon a motion and second that is then approved by a vote of the Commission.

H. New Public Hearings
   1. Shall be conducted as outlined in Rule 6.

I. Manager/Staff Comments
   1. This portion is an opportunity for the Manager or staff to provide updates on upcoming items, past items, study sessions, and other announcements.

J. Commissioner Comments
   1. During this portion of the agenda, members of the Commission may make a brief announcement, report on their activities, or request an item be placed on the agenda for future consideration.

K. Adjournment
   1. Commission meetings shall adjourn by 10:00 p.m. unless extended as set forth in the next subsection.
   2. If a motion to extend the meeting after 10:00 p.m. is passed by at least two-thirds of the members of the Commission who are present and eligible

to vote upon such motion, the Commission may hear and consider any matter on the agenda after 10:00 p.m.

RULE 6

CONDUCT OF PUBLIC HEARING

A. Purpose
   1. The Commission is a public agency with land use planning and decision-making duties. It is the policy of the Commission to encourage free and open discussion of issues on a Commission meeting agenda, but also to ensure that the Commission completes the agenda in a timely manner and in a process that accords courtesy and respect to all participants.

B. Disruptive Public Speakers
   1. No member of the public shall engage in conduct that disrupts, disturbs, or impedes the Commission meeting's orderly conduct. Such behavior may include making loud, threatening, abusive, personal, impertinent, or profane remarks. The Chair or a majority of the Commission present members may order any person who engages in such to be silent. If such an order is given, such person shall be barred from further communication with the Commission during that meeting or be required to leave the meeting room.
   2. Any person making a verbal or written threat of violence against any commissioner, staff, or audience member shall be referred to the Oxnard Police Department for investigation of making terrorist threats and possible enforcement of a Gun Violence Restraining Order, GVRO.

C. Public Hearing Procedure
   1. Unless otherwise directed by the Chair, the order of presentation of evidence or testimony, oral and written, on any public hearing item shall be as follows:
      a. The Chair opens the public hearing.
      b. Staff makes a brief presentation, including a summary of the item, an analysis of the issues, and a recommendation.
      c. Introduction of applicant and participants.
      d. If present, the applicant may make a presentation (of 15 minutes unless extended by majority vote) and shall be available for questions from the Commission. The Commission may proceed whether or not an applicant is present.
      e. Members question both staff and applicant(s).
      f. The Chair invites public testimony.
      g. Staff and applicant(s) respond to public testimony.
      h. Chair closes hearing to public testimony.
      i. Members deliberate and vote on the item.

D. Oral Testimony
   1. All oral testimony received at meetings of the Commission shall be directed to the Chair. All oral testimony from one person shall be limited to three minutes, provided, however, that the Chair may grant additional time to an applicant, an appellant, a staff member, a consultant to the City, a representative of a neighborhood council, or a representative of another public agency.

E. Debate and Questions
   1. The Chair shall not allow debate among members of the public. Any person wishing to direct a question to another person shall submit such question to the Chair, who may, at his or her discretion, ask the question. The Chair may prohibit a member of the public from speaking on an issue more than once during any hearing.

F. Rules of Evidence
   1. Public hearings held by the Commission need not be conducted according to the rules of evidence contained in the California Evidence Code. The following rules of evidence shall apply:
      a. The Commission may consider any evidence that is the sort of evidence that responsible persons are accustomed to relying upon in the conduct of serious affairs.
      b. All evidence shall be directly related to the item under consideration.
      c. Persons testifying before the Commission shall be encouraged to submit their testimony and comments in writing for the record.

RULE 7

COMMUNICATIONS AND REPORTS OF THE COMMISSION

A. Information provided by Staff
   1. Customarily, staff reports and other information related to a regular meeting shall be provided to the Commission on the Monday preceding a Thursday meeting.
   2. Staff may provide the Commission with supplemental information closer to the time of or at a meeting, and the agenda item need not be continued.
   3. As provided in Government Code section 54957.5, agendas, staff reports, supplemental information, and other writings distributed to all, or a majority, of the members of the Commission in connection with a matter subject to discussion or consideration at a Commission meeting shall be made available for public inspection or copying without delay, unless such writings are exempt by law from public disclosure.

B. Written Communications from the Public
   1. The Commission encourages the public to prepare and send written communications that may assist the Commission in its deliberations on an item. The correspondent shall provide fifteen copies, no larger than page

size 11x17 of all written material for members, the recording secretary, staff, file, and the public with the below specifications:

a. Font Size: Minimum 12-point font.
b. Spacing: Single
c. Page Limitation (double-sided equivalent):
  i. 3 days prior to meeting by 5:00 P.M.: 5 pages maximum, including exhibits
  ii. Between 3 days prior to meeting at 5:00 P.M. to the meeting: 1 page maximum, including exhibits

2. The Commission shall refer to staff all such written communications, including e-mails, regarding a subject or matter, not appearing on the agenda.

RULE 8

ELECTION AND DUTIES OF OFFICERS

A. Election of the Chair and Vice-Chair

1. Officers of the Commission shall consist of a chair and vice-chair.
2. Elections will be held during the first regular meeting of the Commission held in every calendar year or during the first regular meeting after appointment of the members of the Commission by the City Council.
3. The members of the Commission shall elect one member as Chair and another as Vice-Chair, to serve for one year or until a successor is appointed, unless either is earlier removed from such positions by a majority vote of the members of the Commission or by the City Council.
4. Selection of Chair and Vice-Chair
  a. The Chair will open nominations for Chair.
  b. After all nominations, the Chair will close nominations.
  c. The Commission Clerk will perform a roll call of the members.
  d. If there are multiple nominees, each member will vote by stating their choice for Chair or abstain. A single nomination will be a Yes, No, or abstain vote.
  e. At the conclusion, the new Chair will assume all duties and conduct the Vice-Chair selection.
5. The Chair shall preside at all regular and special meetings, re-order the agenda as necessary, call special meetings, jointly set meeting agendas with staff, and represent the Commission at meetings of the City Council, other public agencies, and at civic events. The Chair is also responsible to for signing resolutions adopted by the Commission and verifying the accuracy of the contents.
6. Vacancy of an Office
  a. If a vacancy occurs prior to the next annual election, a special election shall be held to fill the vacant office from among the membership.
  b. That member shall serve until the next regularly scheduled election.

7. In the absence of the Chair, the Vice-Chair shall perform the duties of the Chair.
8. In the absence of both the Chair and Vice-Chair, the immediate past chair shall preside at the meeting. If the immediate past chair is not present, the most senior member of the Commission shall perform the duties of the Chair.
9. A removal of an elected officer needs to have a motion and a second to be placed on the next meeting's agenda.
    a. The chair or vice-chair may be removed by a two-thirds majority vote of the Commission at a regularly scheduled meeting of the Commission, when all appointed members are present.
    b. Any officer removed ceases to hold the office once the vote has been tallied and announced.

RULE 9

SEATING ARRANGEMENT

A. The seating arrangement for the Commission shall be as follows:
    1. The Chair shall be seated in the middle of the dais. The Vice-Chair shall sit immediately to the Chair's right.
    2. The senior member on the Commission will sit immediately to the Chair's left.
    3. The Commission members will sit in seniority with the newest member seated on the far right of the Chair.
    4. When a member of the Commission leaves the Commission, the members will close the gap based on seniority towards the Chair, and the newly appointed member is seated on the far right of the Chair.

RULE 10

RESTRICTION ON REPRESENTATION

A. No member of the Commission shall purport to represent or speak on behalf of the Commission without obtaining the consent of the Commission in the form of a motion passed at a regular or special meeting of the Commission.

RULE 11

CONDUCT OF COMMISSION MEMBERS

A. All Commission members are expected to conduct themselves respectfully while on the dais.

B. Members are expected to be actively engaged during meetings and work cooperatively with other Commission members.

C. Members are expected to not engage in side conversations or to be on personal mobile devices while on the dais.

D. Members are expected to respect fellow Commissioners' time and wait to be recognized by the Chair before speaking.

E. Members are to be familiar with the Parliamentary Procedures in Rule 14.

RULE 12

RECORD OF MEETINGS

A. A minute record of all proceedings before the Commission shall be prepared and preserved by staff.

B. Minutes shall be prepared in the form and format prescribed by the City Council for citizen advisory groups.

C. All reports and written communications directed to the Commission shall be made a part of the permanent record of the Commission.

D. All motions considered by the Commission shall be recorded whether they pass or fail.

E. Members of the Commission wishing to have specific comments regarding an item reflected in the minutes and preserved for the record shall state, prior to making a comment, that the comment is "for the record."

F. Draft minutes of meetings shall be presented by the recording secretary to the Commission for correction and approval as soon as practical.

RULE 13

SUBCOMMITTEES

A. With the approval of a majority of the Commission members, the Chair may appoint a minimum of 2 members-of the Commission to subcommittees to make recommendations to the full Commission on land use policy matters or such other matters as the Chair may deem appropriate.

B. Each subcommittee is a part of the Commission and is subject to the Commission's authority, direction, and rules.

RULE 14

PARLIAMENTARY PROCEDURE

A. In conducting meetings, the Chair shall be guided by, but is not required to strictly adhere to, Robert's Rules of Order, Newly Revised.

RULE 15

RESIGNATION

A. Any member of the Commission desiring to resign from the Commission shall submit a written resignation to the City Clerk.

RULE 16

ADOPTION AND AMENDMENT OF RULES AND PROCEDURES

A. Planning Commission Adoption and Amendment
   1. These rules and procedures shall be adopted and may be amended at any regular meeting of the Commission by a majority of the members of the Commission, provided that the amendment has been submitted in writing at a previous meeting.

B. City Council Adoption and Amendment
   1. Upon adoption or amendment by the Planning Commission, such rules and procedures shall be submitted to the City Council for review. The City Council shall have the power to approve, disapprove, or modify said rules and procedures, as it deems necessary.

PASSED, APPROVED, AND ADOPTED by the Planning Commission of the City of Oxnard on this 19th day of August 2021.

Ronald Arruejo, Vice Chair

I hereby certify that the foregoing is a true copy of a Resolution adopted by the Planning Commission of the City of Oxnard at a meeting held this 19th day of August 2021, and carried by the following vote:

AYES:	Commissioner(s): Vice Chair Arruejo, Connelly, Lopez, Meyer, Nash, Sanchez
NOES:	Commissioner(s):
ABSENT:	Commissioner(s): Chair Chavez
ABSTAIN:	Commissioner(s):
RECUSED:	Commissioner(s):

Scott Kolwitz, Secretary

Proposed Bylaws with Staff Recommendations

~~To adopt rules and procedures of the Planning Commission pursuant to Section A of Rule XIV of these Commission rules in the City of Oxnard.~~

~~*Resolved* that the Rules and Procedures of the~~ The Planning Commission of the City of Oxnard resolves to adopt the following rules and procedures ~~shall be~~:

RULE 1

TITLE

A. The official title of this Commission shall be "Planning Commission of the City of Oxnard, California".

RULE 2

PREFACE

A. The Planning Commission shall adopt written rules and regulations as to the time, place and date of its regular meetings and shall adopt such rules and regulations as it deems necessary to conduct its business including rules of procedure. Such rules and regulations shall not be inconsistent with the laws of the State of California or with the ordinances, resolutions, or regulations of the City of Oxnard. These rules and procedures are prepared to serve this purpose.

The City Council of the City of Oxnard established the Planning Commission and granted to it responsibilities in the area of land use, ~~redevelopment issues,~~ and planning permit decisions. These rules and procedures are intended to assist and be used by the Planning Commission in performing its duties and conducting its meetings. If a conflict arises between these rules and procedures and the ~~City of~~ Oxnard ~~Municipal~~ City Code, the Code shall control.

RULE 3

GENERAL PROVISIONS

A. The Planning Commission of the City of Oxnard (hereinafter in these rules referred to as the "Commission") adopts the following rules and procedures to govern the conduct of its meetings.

B. Upon appointment:
   1. Each member of the Commission shall receive a copy of these rules and procedures, and upon amendment.
   2. Each member shall receive a copy of the Robert's Rules of Order, Newly Revised.
   3. Each member shall receive training on the Ralph M. Brown Act.

RULE 4

MEETINGS

A. Calling of Meetings
   1. The Commission shall regularly meet on the first and third Thursday of each month. The regular meeting shall commence at 6:00 p.m. in the City Council Chambers, and as may be allowed by State law.
   2. The Commission shall approve an annual calendar in the prior year.
   3. Special meetings shall be called and convened by the Chair or majority of the members as provided by Rule 5.
   4. The Ralph M. Brown Act shall govern all meetings of the Commission.
B. Notice for Meetings
   1. The Commission meetings shall comply with Ordinance No. 2948 (Sunshine Ordinance), and the legislative body and public shall have the agenda and attachments available 7 days before the regular meeting.

RULE 5

MEETING AND HEARING PROCEDURES

A. In general
   1. Meetings and hearings of the Commission shall be called to order and presided over by the Chair or, in the Chair's absence, by the Vice-Chair to carry out such duties.
   2. Meetings and hearings of the Commission shall be open to the public unless closed under the Commission's Counsel direction.
   3. Any meeting or hearing of the Commission that is open to the public shall be open to coverage by television broadcast, online through the city website, and YouTube channel.
   4. No person other than a member of the Commission or city staff may stand in or be seated at the Council Chambers' dais area unless the Chair determines otherwise.
B. Quorum
   1. A quorum of the Commission shall be four members.
   2. A quorum shall be present in order for the Commission to conduct business.
   3. Absence of a quorum
      a. In the absence of a quorum at any meeting, such meeting shall be adjourned to the next regular meeting date by the Chair, majority of members present, or staff.
      b. A meeting may be declared adjourned for absence of a quorum after a 15-minute period has elapsed from the scheduled time of the start of the meeting.
      c. A meeting may also be declared adjourned in advance if the absence notifications received by staff provided for the absence of a quorum.
      d. Adjournment may be declared by the Chair, Vice-Chair, or staff.

4. Exception to absence of quorum because of abstentions due to a conflict of interest:
   a. If all Commissioners are present and if enough Commissioners abstain due to a conflict of interest so as to lose a quorum, the Commission shall exercise the rule of necessity to regain a quorum.
   b. Otherwise disqualified Commissioners shall be chosen by lot until a quorum is reached.
   c. The Commissioners so chosen shall continue to participate in that matter until its conclusion.

C. Voting
1. No vote may be conducted on any item before the Commission unless the Commission's requisite (4) number of members is present.
2. No vote by any member of the Commission on any item may be cast by proxy.
3. Unless otherwise specified by State law, an affirmative vote of a majority of the members present and eligible to vote shall take action on any items.
4. If any item fails to receive a majority vote, it will be considered denied or recommended for denial.

D. Meeting procedures
1. The Chair shall call the meeting to order and announce the date, time, and meeting type.
2. Each Commission meeting shall include preliminary items, such as "Roll Call" and "Pledge of Allegiance."
3. Each meeting shall have a time for the public to speak entitled "Public Comments on items not on the Agenda." The public will also be allowed to speak on all items listed on the agenda.
4. When the Chair calls for public comments during a regular meeting, the public member may address the Commission on matters within the Commission's subject matter jurisdiction and that do not appear on the agenda as a listed item.
5. When the Chair calls for public comments during a special meeting, the public member may address the Commission on matters within the Commission's subject matter jurisdiction and that only appear on the agenda as a listed item.
6. Each member of the public is allowed a minimum of three (3) minutes to speak, but additional time may be granted by the Chair or majority of the members.
7. The Commission shall not take action on any item not appearing on the agenda unless the action is authorized by the Ralph M. Brown Act.

E. Consent Agenda
1. This portion of the agenda shall include minor or routine items, whether previous meeting minutes, or other matters.

2. When the consent portion of the agenda is called, the Chair shall ask the members if they have questions or if a discussion is required. Staff may respond to routine inquiries from members of the Commission concerning items on the consent agenda. If there are substantial questions by members of the Commission, an item may be removed from the consent agenda and considered separately.
3. Any member of the Commission may move that a matter on the consent agenda be removed from the consent agenda and be considered separately.

F. Ex Parte Declarations for Public Hearing Items
1. Commissioners are discouraged from suggesting any change to any project to the applicant or staff before the project is considered by the Commission as a whole.
2. To ensure that all Commissioners receive the same information relative to a project that will be reviewed by the Commission, third party contacts are discouraged.
3. The below should be disclosed by the Commissioner at the Commission~~e~~ meeting prior to the item being considered:
   a. Ex Parte Communications
   b. Site Visits
   c. Conflict of Interest
   d. Financial Impacts

G. Continued Public Hearings
1. A continued public hearing shall be resumed at the point of the public hearing at which such matter was continued. If the public testimony portion of the public hearing had been closed, public testimony may be reopened upon a motion and second that is then approved by a vote of the Commission.

H. New Public Hearings
1. Shall be conducted as outlined in Rule 6.

I. Planning Manager/Staff Comments
1. This portion is an opportunity for the Planning Manager or staff to provide updates on upcoming items, past items, study sessions, and other announcements.

J. Commissioner Comments
1. During this portion of the agenda, members of the Commission may make a brief announcement, report on their activities, or request an item be placed on the agenda for future consideration.

K. Adjournment
1. Commission meetings shall adjourn by 10:00 p.m. unless extended as set forth in the next subsection.
2. If a motion to extend the meeting after 10:00 p.m. is passed by at least two-thirds of the members of the Commission who are present and eligible to vote upon such motion, the Commission may hear and consider any matter on the agenda after 10:00 p.m.

RULE 6

CONDUCT OF PUBLIC HEARING

A. Purpose
   1. The Commission is a public agency with land use planning and decision-making duties. It is the policy of the Commission to encourage free and open discussion of issues on a Commission meeting agenda, but also to ensure that the Commission completes the agenda in a timely manner and in a process that accords courtesy and respect to all participants.

B. Disruptive Public Speakers
   1. No member of the public shall engage in conduct that disrupts, disturbs, or impedes the Commission meeting's orderly conduct. Such behavior may include making loud, threatening, abusive, personal, impertinent, or profane remarks. The Chair or a majority of the Commission present members may order any person who engages in such to be silent. If such an order is given, such person ~~shall~~ may be barred from further communication with the Commission during that meeting or be required to leave the meeting room.
   2. Any person making a verbal or written threat of violence against any commissioner, staff, or audience member shall be referred to the Oxnard Police Department for investigation of making terrorist threats and possible enforcement of a Gun Violence Restraining Order, GVRO.

C. Public Hearing Procedure
   1. Unless otherwise directed by the Chair, the order of presentation of evidence or testimony, oral and written, on any public hearing item shall be as follows:
      a. The Chair opens the public hearing.
      b. Staff makes a brief presentation, including a summary of the item, an analysis of the issues, and a recommendation.
      c. Introduction of applicant and participants.
      d. If present, the applicant may make a presentation (of 15 minutes unless extended by majority vote) and shall be available for questions from the Commission. The Commission may proceed whether or not an applicant is present.
      e. Members question both staff and applicant(s).
      f. The Chair invites public testimony.
      g. Staff and applicant(s) respond to public testimony.
      h. Chair closes hearing to public testimony.
      i. Members deliberate and vote on the item.

D. Oral Testimony
   1. All oral testimony received at meetings of the Commission shall be directed to the Chair. All oral testimony from one person shall be limited to three

minutes, provided, however, that the Chair may grant additional time to an applicant, an appellant, a staff member, a consultant to the City, a representative of a neighborhood council, or a representative of another public agency.

E. Debate and Questions

1. The Chair shall not allow debate among members of the public. Any person wishing to direct a question to another person shall submit such question to the Chair, who may, at his or her discretion, ask the question. The Chair may prohibit a member of the public from speaking on an issue more than once during any hearing.

F. Rules of Evidence

1. Public hearings held by the Commission need not be conducted according to the rules of evidence contained in the California Evidence Code. The following rules of evidence shall apply:

a. The Commission may consider any evidence that is the sort of evidence that responsible persons are accustomed to relying upon in the conduct of serious affairs.

b. All evidence shall be directly related to the item under consideration.

c. Persons testifying before the Commission shall be encouraged to submit their testimony and comments in writing for the record.

RULE 7

COMMUNICATIONS AND REPORTS OF THE COMMISSION

A. Information provided by Staff

1. Customarily, staff reports and other information related to a regular meeting shall be provided to the Commission on the Monday preceding a Thursday meeting.

2. Staff may provide the Commission with supplemental information closer to the time of or at a meeting, and the agenda item need not be continued.

3. As provided in Government Code section 54957.5, agendas, staff reports, supplemental information, and other writings distributed to all, or a majority, of the members of the Commission in connection with a matter subject to discussion or consideration at a Commission meeting shall be made available for public inspection or copying without delay, unless such writings are exempt by law from public disclosure.

B. Written Communications from the Public

1. The Commission encourages the public to prepare and send written communications that may assist the Commission in its deliberations on an item. The correspondent ~~shall~~ is requested to provide fifteen copies, no larger than page size 11x17 of all written material for members, the recording secretary, staff, file, and the public. ~~with the below specifications:~~

~~*a.* Font Size: Minimum 12-point font.~~

~~*b.* Spacing: Single~~

~~*e.* Page Limitation (double-sided equivalent):~~

~~*i.* 3 days prior to meeting by 5:00 P.M.: 5 pages maximum, including exhibits~~

~~*ii.* Between 3 days prior to meeting at 5:00 P.M. to the meeting: 1 page maximum, including exhibits~~

2. The Commission shall refer to staff all such written communications, including e-mails, regarding a subject or matter, not appearing on the agenda.

RULE 8

ELECTION AND DUTIES OF OFFICERS

A. Election of the Chair and Vice-Chair

1. Officers of the Commission shall consist of a chair and vice-chair.

2. Elections will be held during the first regular meeting of the Commission held in every calendar year or during the first regular meeting after appointment of the members of the Commission by the City Council.

3. The members of the Commission shall elect one member as Chair and another as Vice-Chair, to serve for one year or until a successor is appointed, unless either is earlier removed from such positions by a majority vote of the members of the Commission or by the City Council.

4. Selection of Chair and Vice-Chair

a. The Chair will open nominations for Chair.

b. After all nominations, the Chair will close nominations.

c. The Commission Clerk will perform a roll call of the members.

d. If there are multiple nominees, each member will vote by stating their choice for Chair or abstain. A single nomination will be a Yes, No, or abstain vote.

e. At the conclusion, the new Chair will assume all duties and conduct the Vice-Chair selection.

5. The Chair shall preside at all regular and special meetings, re-order the agenda as necessary, call special meetings, jointly set meeting agendas with staff, and represent the Commission at meetings of the City Council, other public agencies, and at civic events. The Chair is also responsible to for signing resolutions adopted by the Commission and verifying the accuracy of the contents.

6. Vacancy of an Office

a. If a vacancy occurs prior to the next annual election, a special election shall be held to fill the vacant office from among the membership.

b. That member shall serve until the next regularly scheduled election.

7. In the absence of the Chair, the Vice-Chair shall perform the duties of the Chair.

8. In the absence of both the Chair and Vice-Chair, the immediate past chair shall preside at the meeting. If the immediate past chair is not present, the

most senior member of the Commission shall perform the duties of the Chair.

9. A removal of an elected officer needs to have a motion and a second to be placed on the next meeting's agenda.

a. The chair or vice-chair may be removed by a two-thirds majority vote of the Commission at a regularly scheduled meeting of the Commission, when all appointed members are present.

b. Any officer removed ceases to hold the office once the vote has been tallied and announced.

RULE 9

SEATING ARRANGEMENT

A. The seating arrangement for the Commission shall be as follows:

1. The Chair shall be seated in the middle of the dais. The Vice-Chair shall sit immediately to the Chair's right.
2. The senior member on the Commission will sit immediately to the Chair's left.
3. The Commission members will sit in seniority with the newest member seated on the far right of the Chair.
4. When a member of the Commission leaves the Commission, the members will close the gap based on seniority towards the Chair, and the newly appointed member is seated on the far right of the Chair.

RULE 10

RESTRICTION ON REPRESENTATION

A. No member of the Commission shall purport to represent or speak on behalf of the Commission without obtaining the consent of the Commission in the form of a motion passed at a regular or special meeting of the Commission.

RULE 11

CONDUCT OF COMMISSION MEMBERS

A. All Commission members are expected to conduct themselves respectfully while on the dais.

B. Members are expected to be actively engaged during meetings and work cooperatively with other Commission members.

C. Members are expected to not engage in side conversations or to be on personal mobile devices while on the dais.

D. Members are expected to respect fellow Commissioners' time and wait to be recognized by the Chair before speaking.

E. Members are to be familiar with the Parliamentary Procedures in Rule 14.

RULE 12

RECORD OF MEETINGS

A. A minute record of all proceedings before the Commission shall be prepared and preserved by staff.

B. Minutes shall be prepared in the form and format prescribed by the City Council for citizen advisory groups.

C. All reports and written communications directed to the Commission shall be made a part of the permanent record of the Commission.

D. All motions considered by the Commission shall be recorded whether they pass or fail.

E. Members of the Commission wishing to have specific comments regarding an item reflected in the minutes and preserved for the record shall state, prior to making a comment, that the comment is "for the record."

F. Draft minutes of meetings shall be presented by the recording secretary to the Commission for correction and approval as soon as practical.

RULE 13

SUBCOMMITTEES

A. With the approval of a majority of the Commission members, the Chair may appoint a minimum of 2 members-of the Commission to subcommittees to make recommendations to the full Commission on land use policy matters or such other matters as the Chair may deem appropriate.

B. Each subcommittee is a part of the Commission and is subject to the Commission's authority, direction, and rules.

RULE 14

PARLIAMENTARY PROCEDURE

A. In conducting meetings, the Chair shall be guided by, but is not required to strictly adhere to, Robert's Rules of Order, Newly Revised.

RULE 15

RESIGNATION

A. Any member of the Commission desiring to resign from the Commission shall submit a written resignation to the City Clerk.

RULE 16

ADOPTION AND AMENDMENT OF RULES AND PROCEDURES

A. Planning Commission Adoption and Amendment
   1. These rules and procedures shall be adopted and may be amended at any regular meeting of the Commission by a majority of the members of the Commission, provided that the amendment has been submitted in writing at a previous meeting.

B. City Council Adoption and Amendment
   1. Upon adoption or amendment by the Planning Commission, such rules and procedures shall be submitted to the City Council for review. The City Council shall have the power to approve, disapprove, or modify said rules and procedures, as it deems necessary.

PASSED, APPROVED, AND ADOPTED by the Planning Commission of the City of Oxnard on this 19th day of August 2021.

_____
Ronald Arruejo, Vice Chair

I hereby certify that the foregoing is a true copy of a Resolution adopted by the Planning Commission of the City of Oxnard at a meeting held this 19th day of August 2021, and carried by the following vote:

AYES:	Commissioner(s): Vice Chair Arruejo, Connelly, Lopez, Meyer, Nash, Sanchez
NOES:	Commissioner(s):
ABSENT:	Commissioner(s): Chair Chavez
ABSTAIN:	Commissioner(s):
RECUSED:	Commissioner(s):

_____
Scott Kolwitz, Secretary

CITY COUNCIL OF THE CITY OF OXNARD

RESOLUTION NO. _____

A RESOLUTION OF THE CITY COUNCIL OF THE CITY OF OXNARD ADOPTING REVISED RULES AND PROCEDURES (BYLAWS) FOR THE PLANNING COMMISSION

WHEREAS, on April 15, 2021, the Planning Commission requested a Study Session to review the Planning Commission Rules and Procedures regarding the role of "Subcommittees," "Amendment of Rules and Procedures" in the and other general revisions; and

WHEREAS, the Rules and Procedures (Bylaws) Subcommittee was created by the Planning Commission on May 20, 2021. The subcommittee met five times between the Planning Commission meetings starting June 3, 2021, through August 5, 2021; and

WHEREAS, on August 5, 2021, the subcommittee moved to approve a resolution recommending the Planning Commission adoption of revised Bylaws. On August 19, 2021, the Planning Commission voted 6-0, with one commissioner absent to approve Resolution 2021-21, establishing the revised Bylaws, subject to approval by the City Council; and

WHEREAS, on October 21, 2023, the Finance and Governance Committee voted 2-0 (with one Council Member absent), to recommend that the City Council approve the Planning Commission's proposed revisions to the Planning Commission Rules and Procedures (Bylaws) with staff's recommended changes; and

NOW, THEREFORE, THE CITY COUNCIL OF THE CITY OF OXNARD DOES HEREBY RESOLVE AS FOLLOWS:

SECTION 1. The City Council hereby adopts the following rules and procedures to govern the conduct of the Planning Commission of the City of Oxnard meetings:

The Planning Commission of the City of Oxnard resolves to adopt the following rules and procedures:

RULE 1

TITLE

A. The official title of this Commission shall be "Planning Commission of the City of Oxnard, California".

RULE 2

PREFACE

A. The Planning Commission shall adopt written rules and regulations as to the time, place and date of its regular meetings and shall adopt such rules and regulations as it deems necessary to conduct its business including rules of procedure. Such rules and regulations shall not be inconsistent with the laws of the State of California or with the ordinances, resolutions, or regulations of the City of Oxnard. These rules and procedures are prepared to serve this purpose.

The City Council of the City of Oxnard established the Planning Commission and granted to it responsibilities in the area of land use, and planning permit decisions. These rules and procedures are intended to assist and be used by the Planning Commission in performing its duties and conducting its meetings. If a conflict arises between these rules and procedures and the Oxnard City Code, the Code shall control.

RULE 3

GENERAL PROVISIONS

A. The Planning Commission of the City of Oxnard (hereinafter in these rules referred to as the "Commission") adopts the following rules and procedures to govern the conduct of its meetings.
B. Upon appointment:
   1. Each member of the Commission shall receive a copy of these rules and procedures, and upon amendment.
   2. Each member shall receive a copy of the Robert's Rules of Order, Newly Revised.
   3. Each member shall receive training on the Ralph M. Brown Act.

RULE 4

MEETINGS

A. Calling of Meetings
   1. The Commission shall regularly meet on the first and third Thursday of each month. The regular meeting shall commence at 6:00 p.m. in the City Council Chambers, and as may be allowed by State law.
   2. The Commission shall approve an annual calendar in the prior year.
   3. Special meetings shall be called and convened by the Chair or majority of the members as provided by Rule 5.
   4. The Ralph M. Brown Act shall govern all meetings of the Commission.
B. Notice for Meetings
   1. The Commission meetings shall comply with Ordinance No. 2948 (Sunshine Ordinance), and the legislative body and public shall have the agenda and attachments available 7 days before the regular meeting.

RULE 5

MEETING AND HEARING PROCEDURES

A. In general
   1. Meetings and hearings of the Commission shall be called to order and presided over by the Chair or, in the Chair's absence, by the Vice-Chair to carry out such duties.
   2. Meetings and hearings of the Commission shall be open to the public unless closed under the Commission's Counsel direction.
   3. Any meeting or hearing of the Commission that is open to the public shall be open to coverage by television broadcast, online through the city website, and YouTube channel.
   4. No person other than a member of the Commission or city staff may stand in or be seated at the Council Chambers' dais area unless the Chair determines otherwise.

B. Quorum
   1. A quorum of the Commission shall be four members.
   2. A quorum shall be present in order for the Commission to conduct business.
   3. Absence of a quorum
      a. In the absence of a quorum at any meeting, such meeting shall be adjourned to the next regular meeting date by the Chair, majority of members present, or staff.
      b. A meeting may be declared adjourned for absence of a quorum after a 15-minute period has elapsed from the scheduled time of the start of the meeting.
      c. A meeting may also be declared adjourned in advance if the absence notifications received by staff provided for the absence of a quorum.
      d. Adjournment may be declared by the Chair, Vice-Chair, or staff.
   4. Exception to absence of quorum because of abstentions due to a conflict of interest:
      a. If all Commissioners are present and if enough Commissioners abstain due to a conflict of interest so as to lose a quorum, the Commission shall exercise the rule of necessity to regain a quorum.
      b. Otherwise disqualified Commissioners shall be chosen by lot until a quorum is reached.
      c. The Commissioners so chosen shall continue to participate in that matter until its conclusion.

C. Voting
   1. No vote may be conducted on any item before the Commission unless the Commission's requisite (4) number of members is present.
   2. No vote by any member of the Commission on any item may be cast by proxy.
   3. Unless otherwise specified by State law, an affirmative vote of a majority of the members present and eligible to vote shall take action on any items.

4. If any item fails to receive a majority vote, it will be considered denied or recommended for denial.

D. Meeting procedures
1. The Chair shall call the meeting to order and announce the date, time, and meeting type.
2. Each Commission meeting shall include preliminary items, such as "Roll Call" and "Pledge of Allegiance."
3. Each meeting shall have a time for the public to speak entitled "Public Comments on items not on the Agenda." The public will also be allowed to speak on all items listed on the agenda.
4. When the Chair calls for public comments during a regular meeting, the public member may address the Commission on matters within the Commission's subject matter jurisdiction and that do not appear on the agenda as a listed item.
5. When the Chair calls for public comments during a special meeting, the public member may address the Commission on matters within the Commission's subject matter jurisdiction and that only appear on the agenda as a listed item.
6. Each member of the public is allowed a minimum of three (3) minutes to speak, but additional time may be granted by the Chair or majority of the members.
7. The Commission shall not take action on any item not appearing on the agenda unless the action is authorized by the Ralph M. Brown Act.

E. Consent Agenda
1. This portion of the agenda shall include minor or routine items, whether previous meeting minutes, or other matters.
2. When the consent portion of the agenda is called, the Chair shall ask the members if they have questions or if a discussion is required. Staff may respond to routine inquiries from members of the Commission concerning items on the consent agenda. If there are substantial questions by members of the Commission, an item may be removed from the consent agenda and considered separately.
3. Any member of the Commission may move that a matter on the consent agenda be removed from the consent agenda and be considered separately.

F. Ex Parte Declarations for Public Hearing Items
1. Commissioners are discouraged from suggesting any change to any project to the applicant or staff before the project is considered by the Commission as a whole.
2. To ensure that all Commissioners receive the same information relative to a project that will be reviewed by the Commission, third party contacts are discouraged.

3. The below should be disclosed by the Commissioner at the Commission meeting prior to the item being considered:
    a. Ex Parte Communications
    b. Site Visits
    c. Conflict of Interest
    d. Financial Impacts

G. Continued Public Hearings
1. A continued public hearing shall be resumed at the point of the public hearing at which such matter was continued. If the public testimony portion of the public hearing had been closed, public testimony may be reopened upon a motion and second that is then approved by a vote of the Commission.

H. New Public Hearings
1. Shall be conducted as outlined in Rule 6.

I. Planning Manager/Staff Comments
1. This portion is an opportunity for the Planning Manager or staff to provide updates on upcoming items, past items, study sessions, and other announcements.

J. Commissioner Comments
1. During this portion of the agenda, members of the Commission may make a brief announcement, report on their activities, or request an item be placed on the agenda for future consideration.

K. Adjournment
1. Commission meetings shall adjourn by 10:00 p.m. unless extended as set forth in the next subsection.
2. If a motion to extend the meeting after 10:00 p.m. is passed by at least two-thirds of the members of the Commission who are present and eligible to vote upon such motion, the Commission may hear and consider any matter on the agenda after 10:00 p.m.

RULE 6

CONDUCT OF PUBLIC HEARING

A. Purpose
1. The Commission is a public agency with land use planning and decision-making duties. It is the policy of the Commission to encourage free and open discussion of issues on a Commission meeting agenda, but also to ensure that the Commission completes the agenda in a timely manner and in a process that accords courtesy and respect to all participants.

B. Disruptive Public Speakers
1. No member of the public shall engage in conduct that disrupts, disturbs, or impedes the Commission meeting's orderly conduct. Such behavior may include making loud, threatening, abusive, personal, impertinent, or profane remarks. The Chair or a majority of the Commission present

members may order any person who engages in such to be silent. If such an order is given, such person may be barred from further communication with the Commission during that meeting or be required to leave the meeting room.

2. Any person making a verbal or written threat of violence against any commissioner, staff, or audience member shall be referred to the Oxnard Police Department for investigation of making terrorist threats and possible enforcement of a Gun Violence Restraining Order, GVRO.

C. Public Hearing Procedure

1. Unless otherwise directed by the Chair, the order of presentation of evidence or testimony, oral and written, on any public hearing item shall be as follows:

a. The Chair opens the public hearing.

b. Staff makes a brief presentation, including a summary of the item, an analysis of the issues, and a recommendation.

c. Introduction of applicant and participants.

d. If present, the applicant may make a presentation (of 15 minutes unless extended by majority vote) and shall be available for questions from the Commission. The Commission may proceed whether or not an applicant is present.

e. Members question both staff and applicant(s).

f. The Chair invites public testimony.

g. Staff and applicant(s) respond to public testimony.

h. Chair closes hearing to public testimony.

i. Members deliberate and vote on the item.

D. Oral Testimony

1. All oral testimony received at meetings of the Commission shall be directed to the Chair. All oral testimony from one person shall be limited to three minutes, provided, however, that the Chair may grant additional time to an applicant, an appellant, a staff member, a consultant to the City, a representative of a neighborhood council, or a representative of another public agency.

E. Debate and Questions

1. The Chair shall not allow debate among members of the public. Any person wishing to direct a question to another person shall submit such question to the Chair, who may, at his or her discretion, ask the question. The Chair may prohibit a member of the public from speaking on an issue more than once during any hearing.

F. Rules of Evidence

1. Public hearings held by the Commission need not be conducted according to the rules of evidence contained in the California Evidence Code. The following rules of evidence shall apply:

a. The Commission may consider any evidence that is the sort of evidence that responsible persons are accustomed to relying upon in the conduct of serious affairs.
b. All evidence shall be directly related to the item under consideration.
c. Persons testifying before the Commission shall be encouraged to submit their testimony and comments in writing for the record.

RULE 7

COMMUNICATIONS AND REPORTS OF THE COMMISSION

A. Information provided by Staff
   1. Customarily, staff reports and other information related to a regular meeting shall be provided to the Commission on the Monday preceding a Thursday meeting.
   2. Staff may provide the Commission with supplemental information closer to the time of or at a meeting, and the agenda item need not be continued.
   3. As provided in Government Code section 54957.5, agendas, staff reports, supplemental information, and other writings distributed to all, or a majority, of the members of the Commission in connection with a matter subject to discussion or consideration at a Commission meeting shall be made available for public inspection or copying without delay, unless such writings are exempt by law from public disclosure.
B. Written Communications from the Public
   1. The Commission encourages the public to prepare and send written communications that may assist the Commission in its deliberations on an item. The correspondent is requested to provide fifteen copies, no larger than page size 11x17 of all written material for members, the recording secretary, staff, file, and the public.
   2. The Commission shall refer to staff all such written communications, including e-mails, regarding a subject or matter, not appearing on the agenda.

RULE 8

ELECTION AND DUTIES OF OFFICERS

A. Election of the Chair and Vice-Chair
   1. Officers of the Commission shall consist of a chair and vice-chair.
   2. Elections will be held during the first regular meeting of the Commission held in every calendar year or during the first regular meeting after appointment of the members of the Commission by the City Council.
   3. The members of the Commission shall elect one member as Chair and another as Vice-Chair, to serve for one year or until a successor is appointed, unless either is earlier removed from such positions by a majority vote of the members of the Commission or by the City Council.
   4. Selection of Chair and Vice-Chair

a. The Chair will open nominations for Chair.
b. After all nominations, the Chair will close nominations.
c. The Commission Clerk will perform a roll call of the members.
d. If there are multiple nominees, each member will vote by stating their choice for Chair or abstain. A single nomination will be a Yes, No, or abstain vote.
e. At the conclusion, the new Chair will assume all duties and conduct the Vice-Chair selection.

5. The Chair shall preside at all regular and special meetings, re-order the agenda as necessary, call special meetings, jointly set meeting agendas with staff, and represent the Commission at meetings of the City Council, other public agencies, and at civic events. The Chair is also responsible for signing resolutions adopted by the Commission and verifying the accuracy of the contents.

6. Vacancy of an Office
a. If a vacancy occurs prior to the next annual election, a special election shall be held to fill the vacant office from among the membership.
b. That member shall serve until the next regularly scheduled election.

7. In the absence of the Chair, the Vice-Chair shall perform the duties of the Chair.

8. In the absence of both the Chair and Vice-Chair, the immediate past chair shall preside at the meeting. If the immediate past chair is not present, the most senior member of the Commission shall perform the duties of the Chair.

9. A removal of an elected officer needs to have a motion and a second to be placed on the next meeting's agenda.
a. The chair or vice-chair may be removed by a two-thirds majority vote of the Commission at a regularly scheduled meeting of the Commission, when all appointed members are present.
b. Any officer removed ceases to hold the office once the vote has been tallied and announced.

RULE 9

SEATING ARRANGEMENT

A. The seating arrangement for the Commission shall be as follows:
1. The Chair shall be seated in the middle of the dais. The Vice-Chair shall sit immediately to the Chair's right.
2. The senior member on the Commission will sit immediately to the Chair's left.
3. The Commission members will sit in seniority with the newest member seated on the far right of the Chair.

4. When a member of the Commission leaves the Commission, the members will close the gap based on seniority towards the Chair, and the newly appointed member is seated on the far right of the Chair.

RULE 10

RESTRICTION ON REPRESENTATION

A. No member of the Commission shall purport to represent or speak on behalf of the Commission without obtaining the consent of the Commission in the form of a motion passed at a regular or special meeting of the Commission.

RULE 11

CONDUCT OF COMMISSION MEMBERS

A. All Commission members are expected to conduct themselves respectfully while on the dais.
B. Members are expected to be actively engaged during meetings and work cooperatively with other Commission members.
C. Members are expected to not engage in side conversations or to be on personal mobile devices while on the dais.
D. Members are expected to respect fellow Commissioners' time and wait to be recognized by the Chair before speaking.
E. Members are to be familiar with the Parliamentary Procedures in Rule 14.

RULE 12

RECORD OF MEETINGS

A. A minute record of all proceedings before the Commission shall be prepared and preserved by staff.
B. Minutes shall be prepared in the form and format prescribed by the City Council for citizen advisory groups.
C. All reports and written communications directed to the Commission shall be made a part of the permanent record of the Commission.
D. All motions considered by the Commission shall be recorded whether they pass or fail.
E. Members of the Commission wishing to have specific comments regarding an item reflected in the minutes and preserved for the record shall state, prior to making a comment, that the comment is "for the record."
F. Draft minutes of meetings shall be presented by the recording secretary to the Commission for correction and approval as soon as practical.

RULE 13

SUBCOMMITTEES

A. With the approval of a majority of the Commission members, the Chair may appoint a minimum of 2 members-of the Commission to subcommittees to make recommendations to the full Commission on land use policy matters or such other matters as the Chair may deem appropriate.
B. Each subcommittee is a part of the Commission and is subject to the Commission's authority, direction, and rules.

RULE 14

PARLIAMENTARY PROCEDURE

A. In conducting meetings, the Chair shall be guided by, but is not required to strictly adhere to, Robert's Rules of Order, Newly Revised.

RULE 15

RESIGNATION

A. Any member of the Commission desiring to resign from the Commission shall submit a written resignation to the City Clerk.

RULE 16

ADOPTION AND AMENDMENT OF RULES AND PROCEDURES

A. Planning Commission Adoption and Amendment
   1. These rules and procedures shall be adopted and may be amended at any regular meeting of the Commission by a majority of the members of the Commission, provided that the amendment has been submitted in writing at a previous meeting.
B. City Council Adoption and Amendment
   1. Upon adoption or amendment by the Planning Commission, such rules and procedures shall be submitted to the City Council for review. The City Council shall have the power to approve, disapprove, or modify said rules and procedures, as it deems necessary.

SECTION 2. The decision of the City Council shall be final.

SECTION 3. The City Clerk shall certify the adoption of this Resolution.

PASSED, APPROVED, AND ADOPTED by the City Council of the City of Oxnard on the 21st day of November 2023, by the following vote:

AYES:

NOES:

ABSENT:

ABSTAIN:

RECUSED:

ATTEST:

_____ _____
Rose Chaparro, City Clerk John C. Zaragoza, Mayor

APPROVED AS TO FORM:

_____
Stephen M. Fischer, City Attorney

Revision to the Planning Commission Rules and Procedures (Bylaws)

Jeff Pengilley, Community Development Director
Joe Pearson II, AICP, Planning & Environmental Services Manager
Community Development Department

City Council
November 21, 2023

CITY OF OXNARD CALIFORNIA

BACKGROUND

- The Planning Commission Bylaws establish the Rules and Procedures for the Planning Commission, including, but not limited to, the purpose of the organization, who are its members, how officers are elected and resign, how meetings are conducted, communication protocols, and rules of conduct.
- The Planning Commission's Rules and Procedures (Bylaws) were last revised and adopted on July 18, 2019.
- On April 15, 2021, the Planning Commission requested staff to place a Study Session to discuss the process for updating the Planning Commission Bylaws.

BACKGROUND (CONTINUED)

- The Planning Commission has the ability to change their Bylaws provided that the Bylaws are consistent with the Planning Commission's Duties as outlined within the current Bylaws.
- The Rules and Procedures (Bylaws) Subcommittee was created by the Planning Commission on May 20, 2021. The subcommittee met five times between the Planning Commission meetings starting June 3, 2021, through August 5, 2021.
- On August 5, 2021, the subcommittee moved to approve a resolution to adopt the Rules and Procedures of the Planning Commission and to report to the Planning Commission on August 19, 2021.
- On August 19, 2021, the Planning Commission voted 6-0, with one commissioner absent to approve Resolution 2021-21, establishing the rules and procedures for the conduct of Planning Commission meetings subject to approval by the City Council.

ANALYSIS/DISCUSSION

- The proposed Bylaws are a comprehensive update intended to update the Bylaws to reflect current best practices and current procedures of the Planning Commission, including those imposed by Measure M.

- The update also reorganizes the Bylaws into a more formalized layout.

ANALYSIS/DISCUSSION (SUMMARY OF CHANGES)

- **RULE 1 - TITLE**

  This new section was added to establish the official title of the Commission as the "Planning Commission of the City of Oxnard, California"

- **RULE 2 -PREFACE**

  This new section was added to establish the purpose and intent of the proposed Bylaws.

- **RULE 3 - GENERAL PROVISIONS**

  The proposed Bylaws adds the requirement that in addition to the Bylaws, each new Commission receive a copy of Robert's Rules of Order, Newly Revised, and training on the Ralph M. Brown Act. The section also adds the language that the Planning Commission adopts the Bylaws to govern the conduct of its meetings. All other requirements are consistent with the current Bylaws.

ANALYSIS/DISCUSSION (SUMMARY OF CHANGES)

- **RULE 4 - MEETINGS**

  This section was relocated from Section 2 of the current Bylaws. The proposed Bylaws formalizes the requirement to approve an annual calendar in the prior year. It also adds the requirements of the City's Sunshine Ordinance, which requires that the legislative body and public shall have the agenda and attachments available 7 days before the regular meeting. All other requirements are consistent with the current Bylaws.

- **RULE 5 - MEETINGS AND HEARING PROCEDURES**

  The section has been revised to address the following:

  - Set the general requirements for each public hearing, including who is responsible for presiding over the meeting and accessibility of meetings in person and virtually.
  - Adds new procedures for what to do in the absence of a quorum due to absences.
  - Adds procedural requirements for establishing a quorum when the absence of a quorum is a result of abstentions due to conflicts of interest.
  - Incorporate the standard public meeting procedures, including rules for public comments, such as incorporating the three (3) minute minimum time limit as required by Measure M.
  - Clarity that the approval of minutes shall occur under the consent agenda.
  - Provide rules and procedures for Ex Parte Declarations for Public Hearings.
  - Change the adjournment time from 11:00 p.m. to 10:00 p.m. unless extended by two-thirds of the Planning Commission present and eligible.

ANALYSIS/DISCUSSION (SUMMARY OF CHANGES)

- **RULE 6 - CONDUCT OF PUBLIC HEARING**

  The purpose section was added to reflect the goals and purpose of the Planning Commission, as it relates to creating an open and public meeting. Paragraph two of section B was added to allow for those making a threat of violence to be referred to the Oxnard Police Department. Section C has been updated to incorporate current practices. The primary changes include allowing for a 15-minute presentation by applicant teams and allowing for both the staff and applicants to respond to public testimony.

- **RULE 7 - COMMUNICATIONS AND REPORTS OF THE COMMISSION**

  Section B was revised to add limitations on font size, spacing, and page limits on written materials submitted for public comment. However, after further review by the City Attorney's Office, staff is recommending the removal of those restrictions due concerns over potential conflicts with the Brown Act.

- **RULE 8 - ELECTION AND DUTIES OF OFFICERS**

  The section has been revised to include rules and procedures for the election of Chair and Vice-Chair. The section also has been revised to include procedures for unanticipated vacancy which allows for the Planning Commission to vote in a replacement, who would serve until the next regular election. Language has also been added to establish protocols for what to do in the event both the Chair and Vice-Chair are absent. Lastly, procedures for the removal of an elected officer by at least a two-thirds vote of the Planning Commission when all members are present.

ANALYSIS/DISCUSSION (SUMMARY OF CHANGES)

- **RULE 9 - SEATING ARRANGEMENT**

  This section was relocated from Section 12 of the current Bylaws. The section is generally consistent with the current Bylaws but have been revised to base the seating arrangement for all members except for the Chair and Vice-Chair to be based on Seniority.

- **RULE 10 - RESTRICTION ON REPRESENTATION**

  This section was relocated from Section 8 of the current Bylaws. This section is consistent with the current Bylaws.

- **RULE 11 - CONDUCT OF COMMISSION MEMBERS**

  This new section was added to establish the expectations for the decorum of the Planning Commission and require that they are familiar with the Parliamentary Procedures.

- **RULE 12 - RECORD OF MEETINGS**

  This section was relocated from Section 9 of the current Bylaws. This section is consistent with the current Bylaws.

ANALYSIS/DISCUSSION (SUMMARY OF CHANGES)

- **RULE 13 - SUBCOMMITTEES**

  This section was relocated from Section 10 of the current Bylaws. This section has been revised to require that the subcommittee have a minimum of 2 members and clarify that the Subcommittee is still subject to the Planning Commission and subject to the commission's authority, direction, and rules.

- **RULE 14 - PARLIAMENTARY PROCEDURE**

  This section was relocated from Section 11 of the current Bylaws. This section is consistent with the current Bylaws.

- **RULE 15 - RESIGNATION**

  This section was relocated from Section 13 of the current Bylaws. This section is consistent with the current Bylaws.

- **RULE 16 - ADOPTION AND AMENDMENT OF RULES AND PROCEDURES**

  This section was relocated from Section 14 of the current Bylaws. This section is revised to include the requirement that upon adoption or amendment of the Bylaws by the Planning Commission the Bylaws shall be presented to the City Council for adoption.

SUBSEQUENT STAFF CHANGES

Following approval by the Planning Commission, the Bylaws were reviewed by the City of Oxnard Attorney's Office. As a result of that review staff is recommending minor changes to address minor clean ups and possible conflict with other legal requirements, such as the Brown Act. The redlines of these changes are provided in Attachment 3 of the Staff Report. Many of the changes are minor changes in nature and do not alter the substance of the proposed Bylaws. Two changes that do result in substantive changes are in Rule 6.B.1 and Rule 7.B.1.

Under Rule 6.B.1, staff is recommending the following change:

"No member of the public shall engage in conduct that disrupts, disturbs, or impedes the Commission meeting's orderly conduct. Such behavior may include making loud, threatening, abusive, personal, impertinent, or profane remarks. The Chair or a majority of the Commission present members may order any person who engages in such to be silent. If such an order is given, such person ~~shall~~ may be barred from further communication with the Commission during that meeting or be required to leave the meeting room."

SUBSEQUENT STAFF CHANGES (CONTINUED)

11

Under Rule 7.B.1, staff is recommending the following change:

1. *"The Commission encourages the public to prepare and send written communications that may assist the Commission in its deliberations on an item. The correspondent ~~shall~~ is requested to provide fifteen copies, no larger than page size 11x17 of all written material for members, the recording secretary, staff, file, and the public ~~with the below specifications:~~*
   - ~~*a. Font Size: Minimum 12-point font.*~~
   - ~~*b. Spacing: Single*~~
   - ~~*c. Page Limitation (double-sided equivalent):*~~
     - ~~*i. 3 days prior to meeting by 5:00 P.M.: 5 pages maximum, including exhibits*~~
     - ~~*ii. Between 3 days prior to meeting at 5:00 P.M. to the meeting: 1 page maximum, including exhibits*~~*"*

Both of these edits are requested to address the potential conflicts with the Brown Act, as it has the potential to limit the public's ability to participate in the public process before the Planning Commission.

FINANCIAL IMPACT

- There is no Financial Impact associated with the approval of the Planning Commission Bylaws.

Committee Outcome

- The Finance & Governance Committee approved 2-0 (with one Council Member absent) on October 24, 2023 to approve the staff recommendation and to forward the item for Council approval.

RECOMMENDATION

- That the City Council approve a Resolution adopting proposed revisions to the Planning Commission Rules and Procedures (Bylaws) with staff's recommended changes.

CITY OF
OXNARD
CALIFORNIA

End of Presentation